Raspberry Pi ADC hat

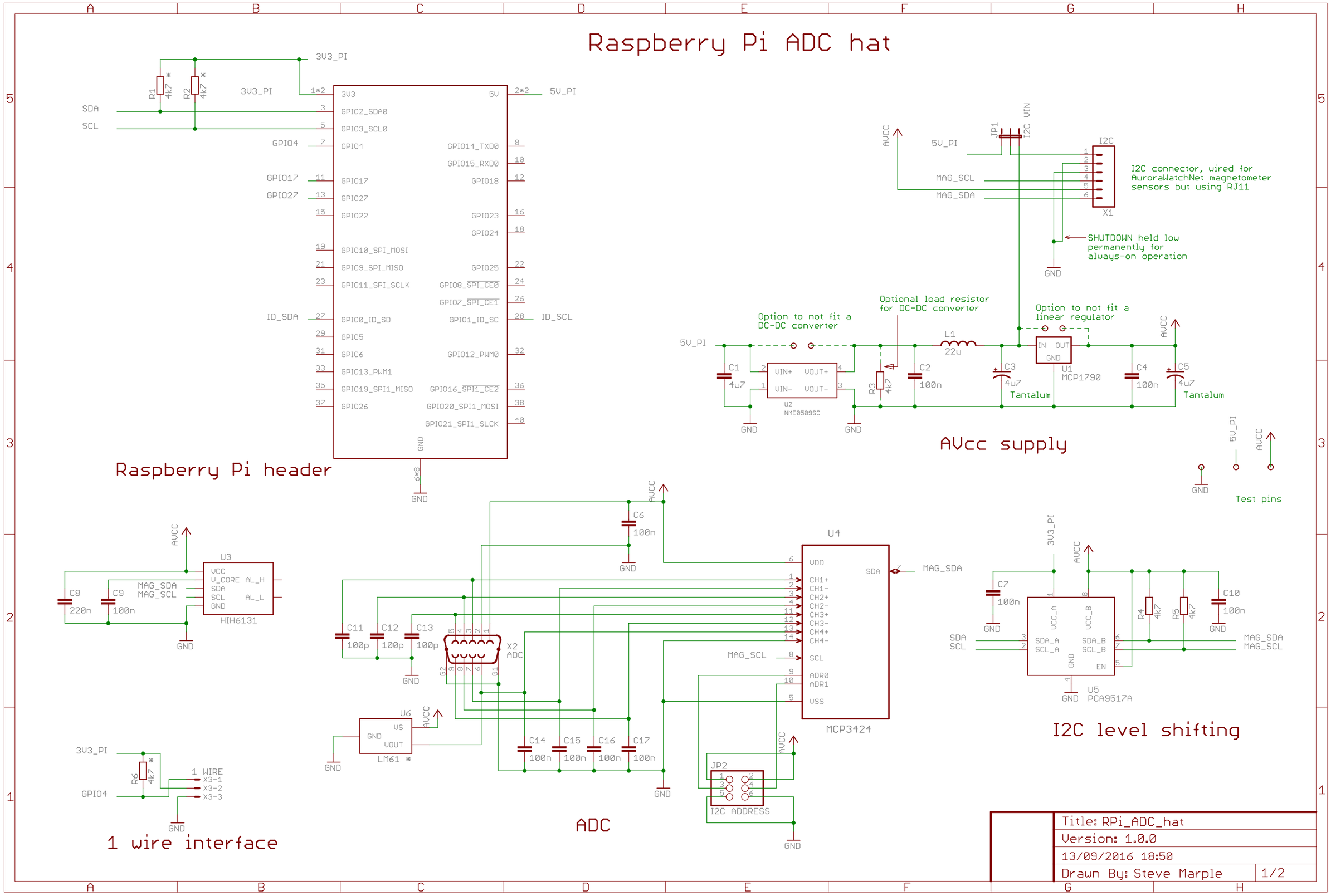

Title: RPi_ADC_hat	
Version: 1.0.0	
13/09/2016 18:50	
Drawn By: Steve Marple	1/2