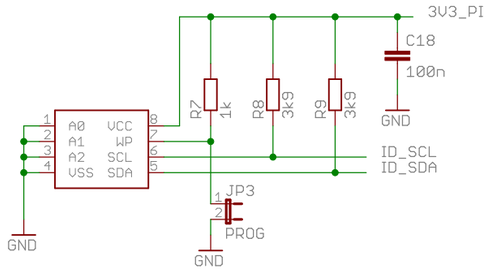

HAT EEPROM

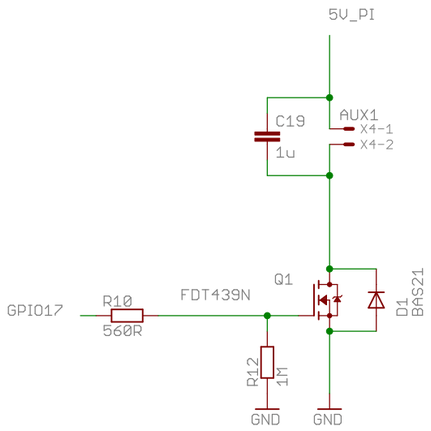

Fan controller

Use FET but include gate resistor
so that BJT could be used.

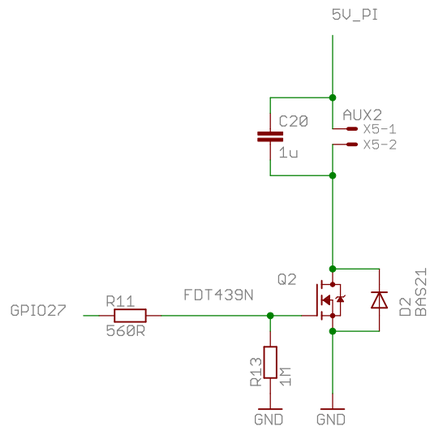

Fan controller

Use FET but include gate resistor
so that BJT could be used.

Title: RPi_ADC_hat	
Version: 1.0.0	
13/09/2016 18:50	
Drawn By: Steve Marple	2/2