! If PA4 (SS) is LOW during startup UART mode is enabled.
· PA2 (MISO) changes to RXD and SPI is disabled

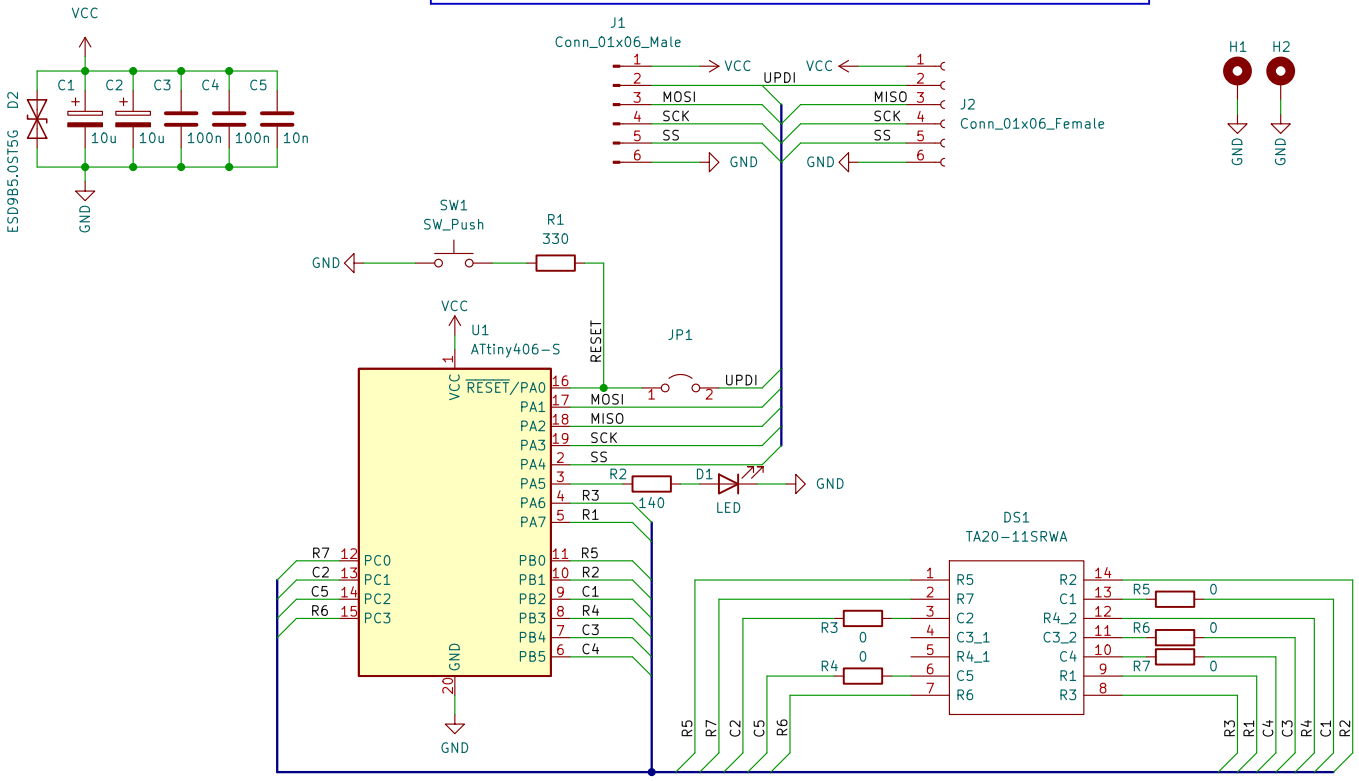

*Additional information can be found at https://github.com/sunriax/.matrix

g.raf^engineering

Sheet: /

File: matrix.kicad_sch

Title: Matrix Display Controller

Size: A4	Date: 2022-02-24	Rev: 1.0
KiCad E.D.A. kicad (6.0.1)		Id: 1/1