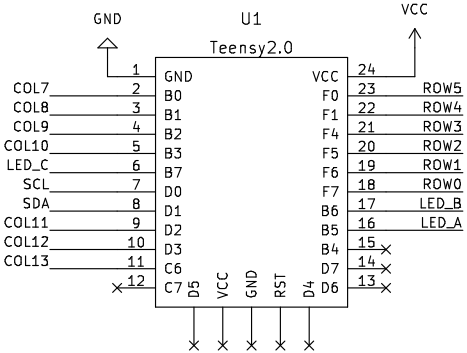

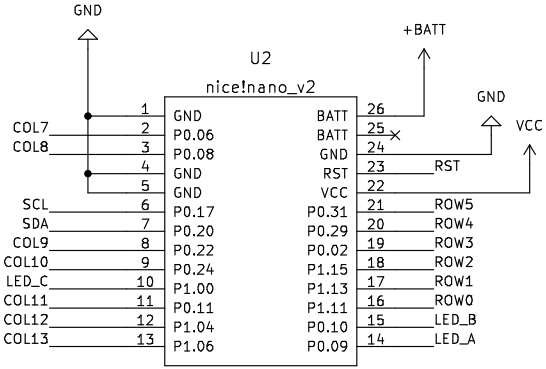
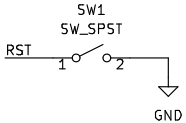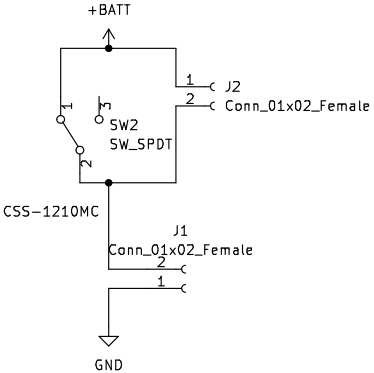
https://clicketysplit.ca/products/tactile-switch