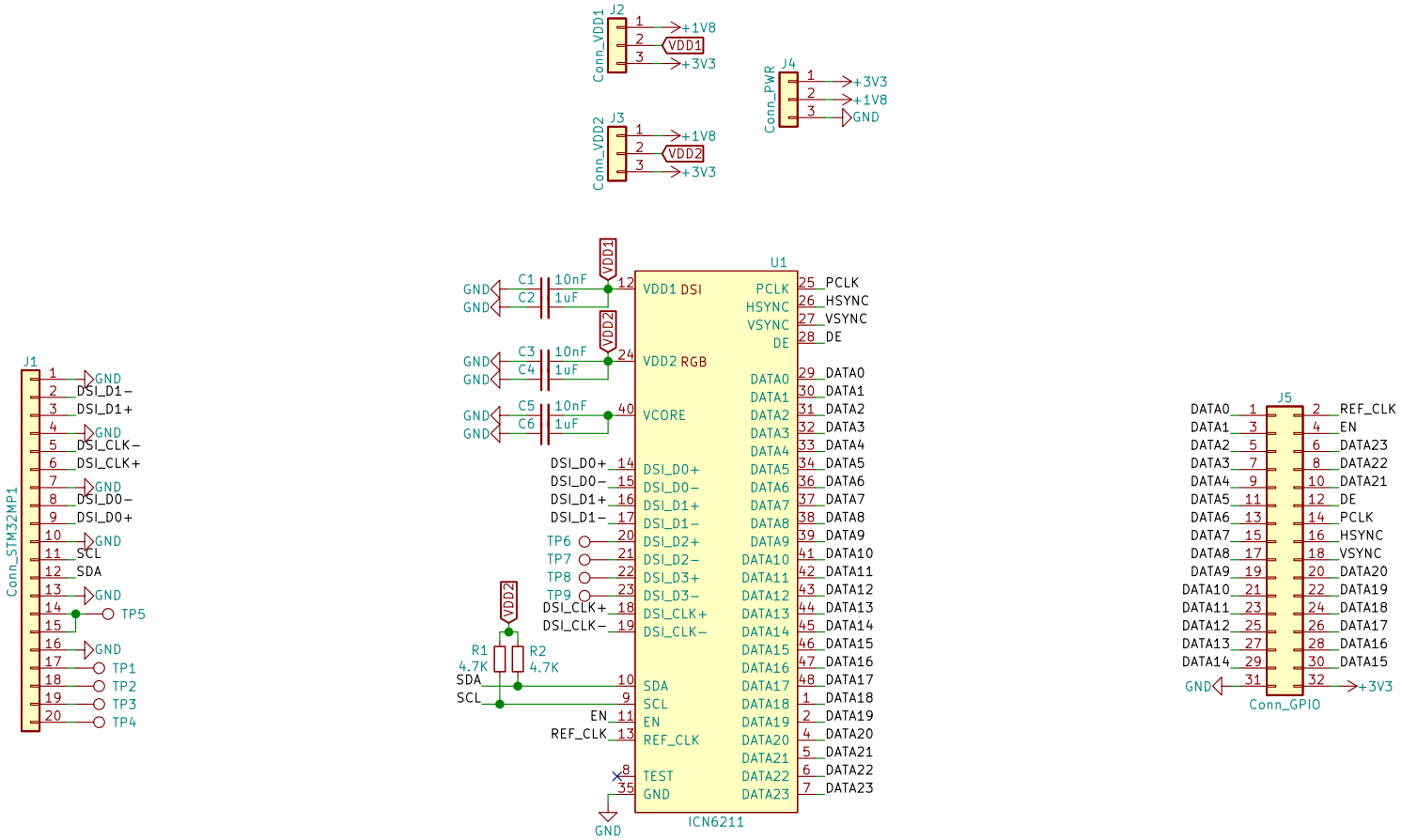


Sheet: /
File: ICN6211_breakout.sch

**Title:**

| Size: A4 | Date: | Rev: |
|---|---|---|
| KiCad E.D.A. kicad (5.99.0−861−ge93304566) | | Id: 1/1 |