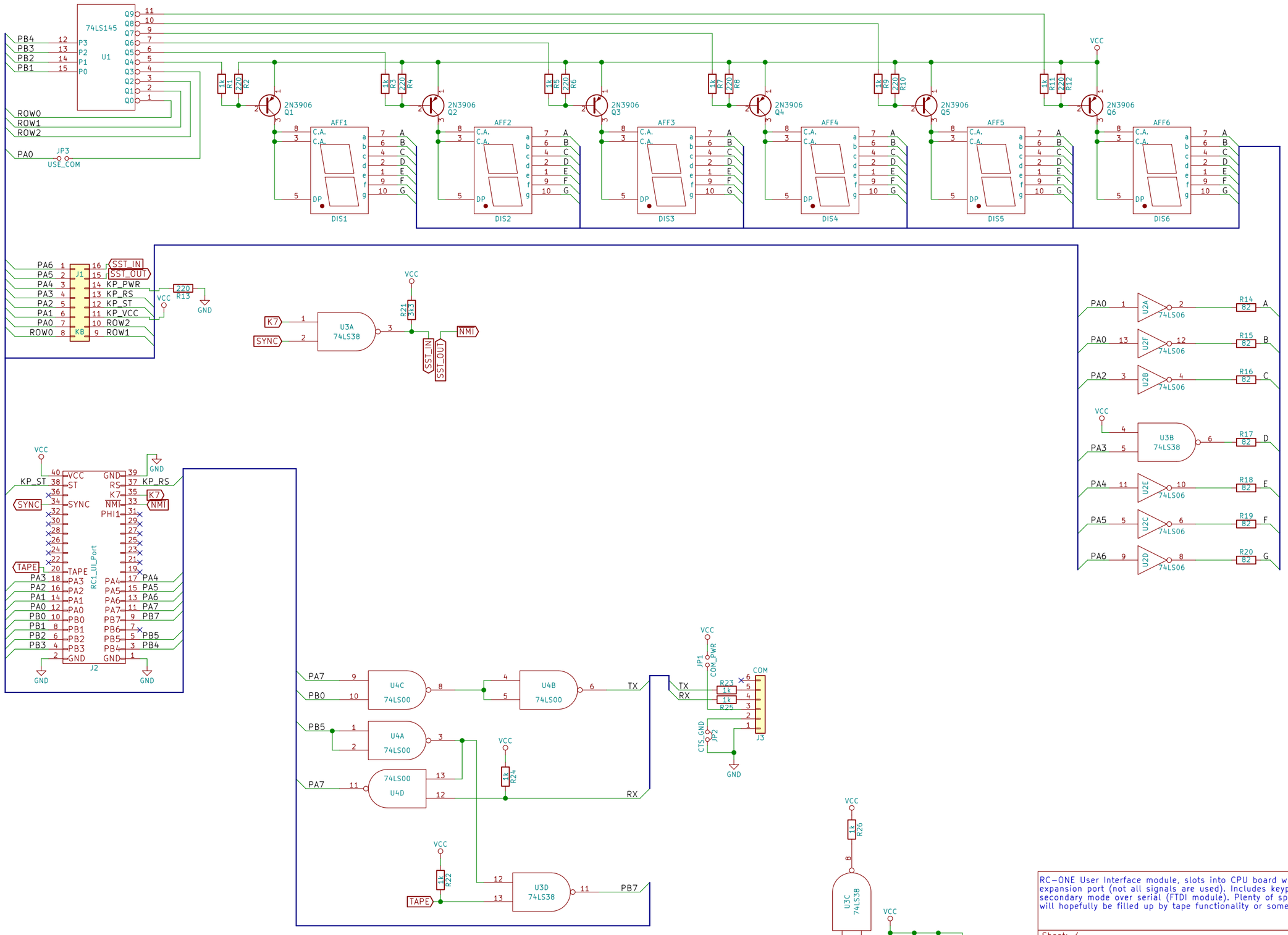

RC-ONE User Interface module, slots into CPU board with the connector doubling as an expansion port (not all signals are used). Includes keypad connector, output as well as a secondary mode over serial (FTDI module). Plenty of space left over, in the future this will hopefully be filled up by tape functionality or something to that effect.

Sheet: /
File: RC1 UI.sch

Title: RC-ONE User Interface

Size: A3	Date:	Rev:
KiCad E.D.A. kicad 4.0.7		Id: 1/1