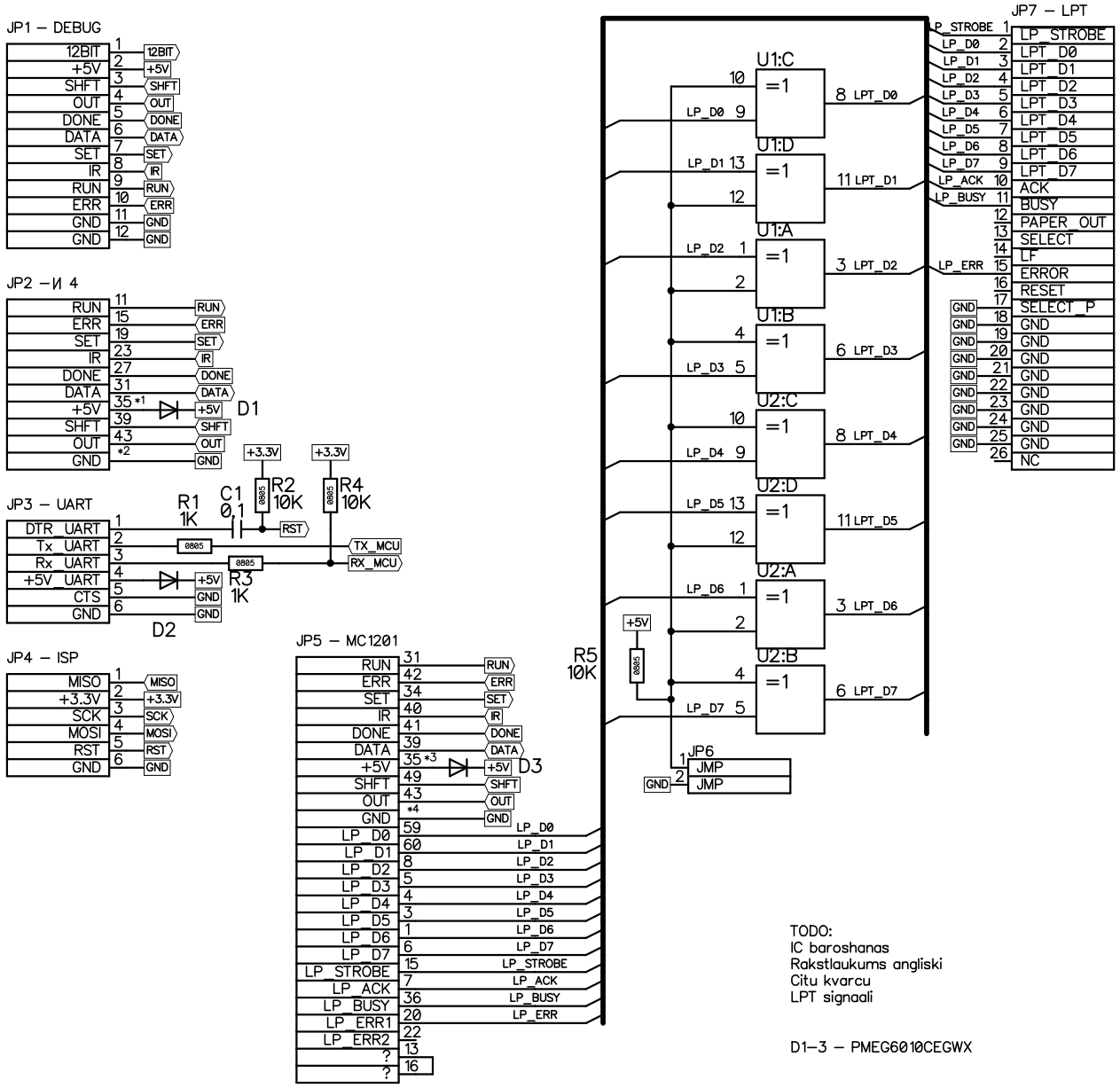


TODO:
IC baroshanas
Rakstlaukums angliski
Citu kvarcu
LPT signaali

D1–3 – PMEG6010CEGWX

| Izm | Lapa | Dokum.Nr. | Paraksts | Dat. |
|---|---|---|---|---|
| Izstr. | | | | |
| Parbaud. | | | | |

# RX01 emulator

| Lit | Masa | Merogs |
|---|---|---|
| Lapa 1 | Lapas 1 | |

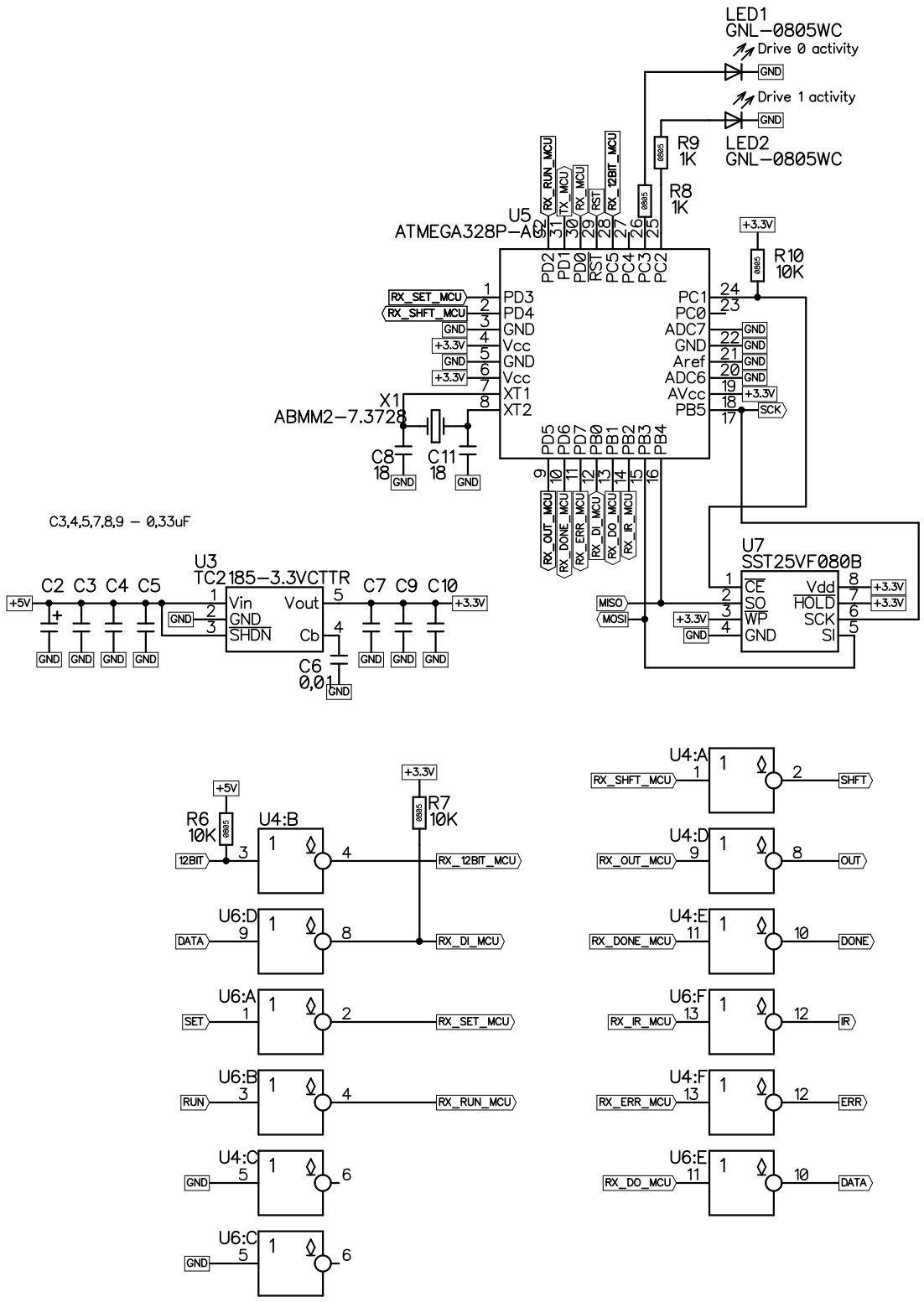
LED1
GNL-0805WC
Drive 0 activity
Drive 1 activity
LED2
GNL-0805WC
R9
1K
R8
1K
R10
10K
U5
ATMEGA328P-AU
PD2 PD1 PD0 RST PC5 PC4 PC3 PC2
PD3 PD4 GND Vcc GND Vcc XT1 XT2
PC1 PC0 ADC7 GND Aref ADC6 AVcc PB5
PD5 PD6 PD7 PB0 PB1 PB2 PB3 PB4
RX_RUN_MCU
TX_MCU
RX_MCU
RST
RX_12BIT_MCU
RX_SET_MCU
RX_SHFT_MCU
RX_OUT_MCU
RX_DONE_MCU
RX_ERR_MCU
RX_DI_MCU
RX_DO_MCU
RX_IR_MCU
SCK
X1
ABMM2-7.3728
C8
18
C11
18
C3,4,5,7,8,9 – 0,33uF
U3
TC2185-3.3VCTTR
Vin GND SHDN Vout Cb
C2 C3 C4 C5
C7 C9 C10
C6
0,01
U7
SST25VF080B
CE SO WP GND Vdd HOLD SCK SI
MISO
MOSI
R6
10K
U4:B
R7
10K
12BIT
RX_12BIT_MCU
U6:D
DATA
RX_DI_MCU
U6:A
SET
RX_SET_MCU
U6:B
RUN
RX_RUN_MCU
U4:C
U6:C
U4:A
RX_SHFT_MCU
SHFT
U4:D
RX_OUT_MCU
OUT
U4:E
RX_DONE_MCU
DONE
U6:F
RX_IR_MCU
IR
U4:F
RX_ERR_MCU
ERR
U6:E
RX_DO_MCU
DATA