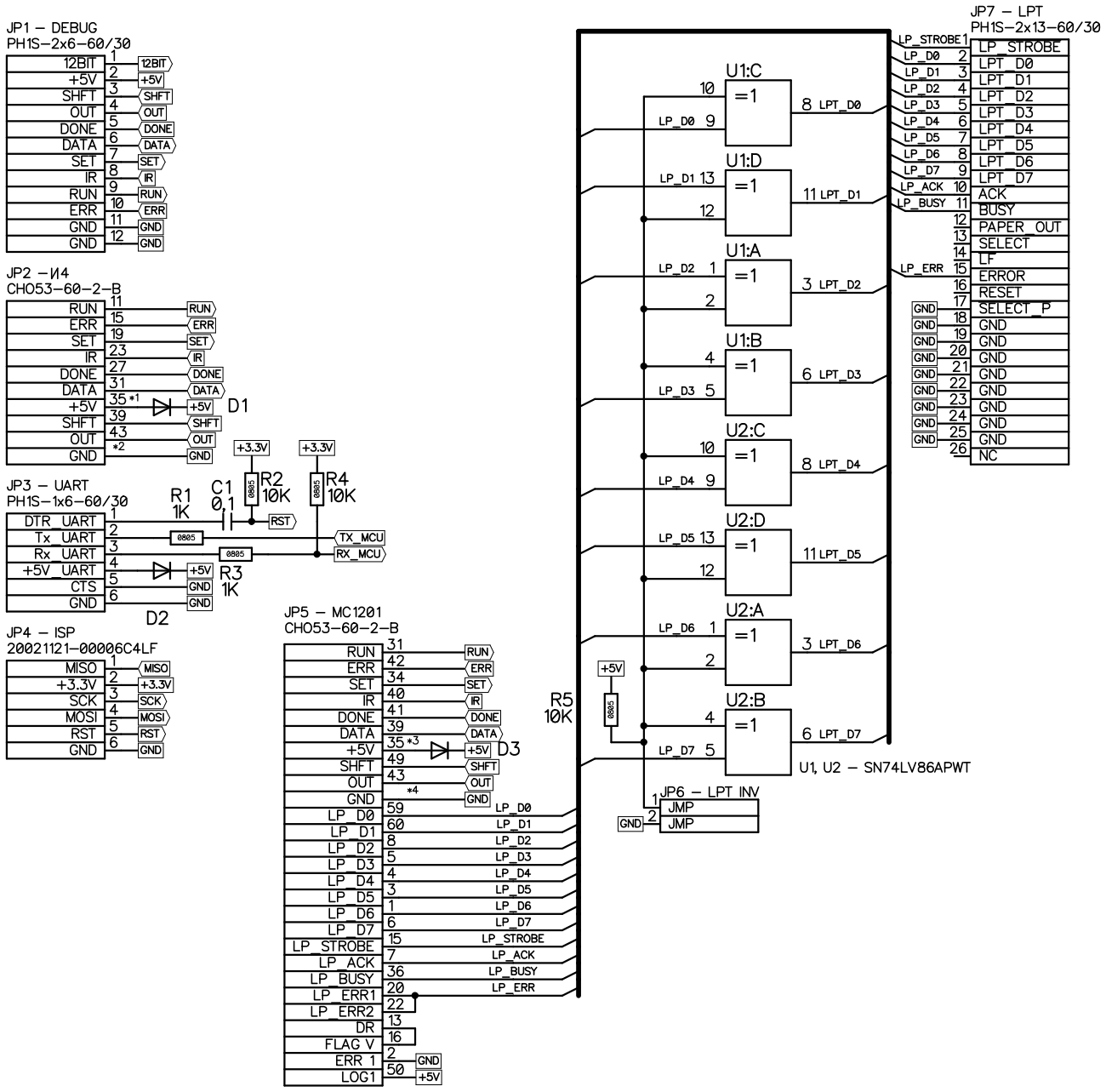

*1 – 5V should be added to pin 35 on I4 board
*2 – JP2 GND pins – 9,13,17,21,25,29,33,37,41,45 and all even pins
*3 – shorted resistor needed on board
*4 – JP5 GND pins – 19,29,32,37,45,50,52,54,55,58
*5 – U1,U2, U4, U6 – GND – 7.pin, +5V – 14.pin

		Doc.Nr.	Sign.	Date	RX01 emulator	Proj. method / Scale
Design		Balins				
Parbaud.		___				Sheet 1 / Sheets 1

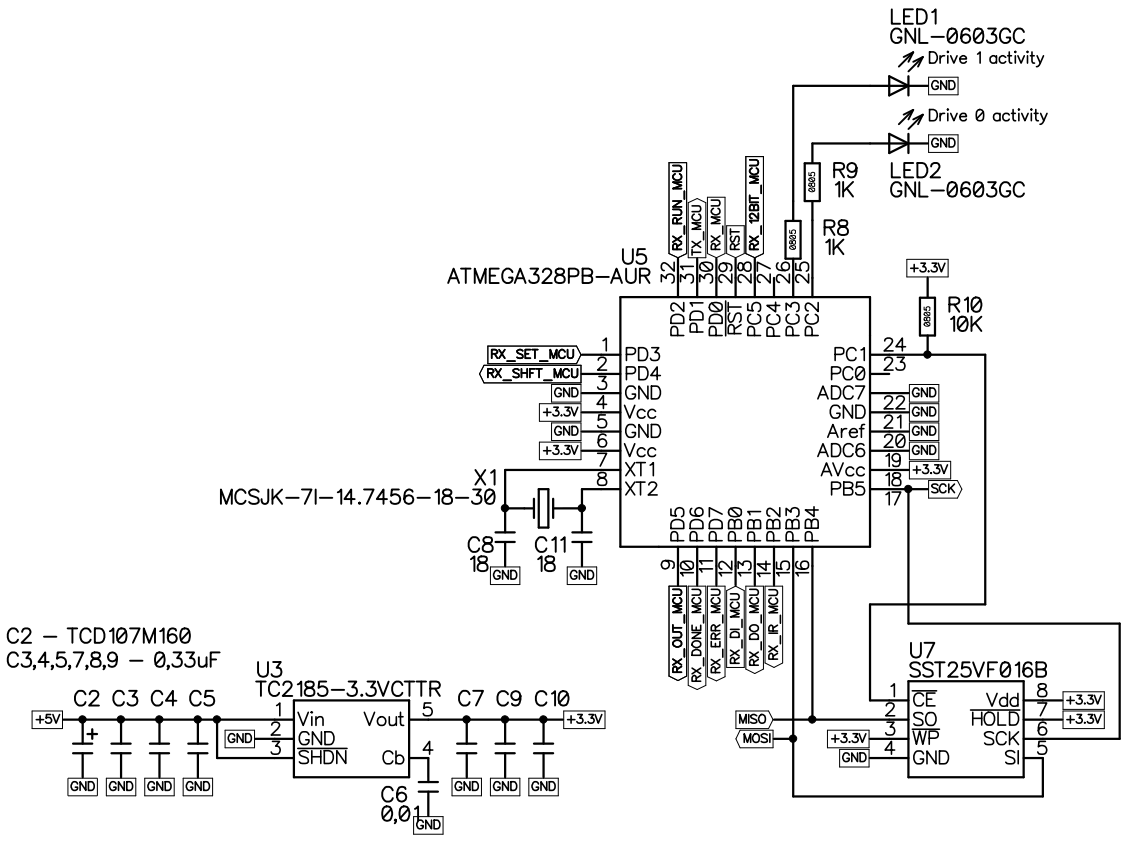

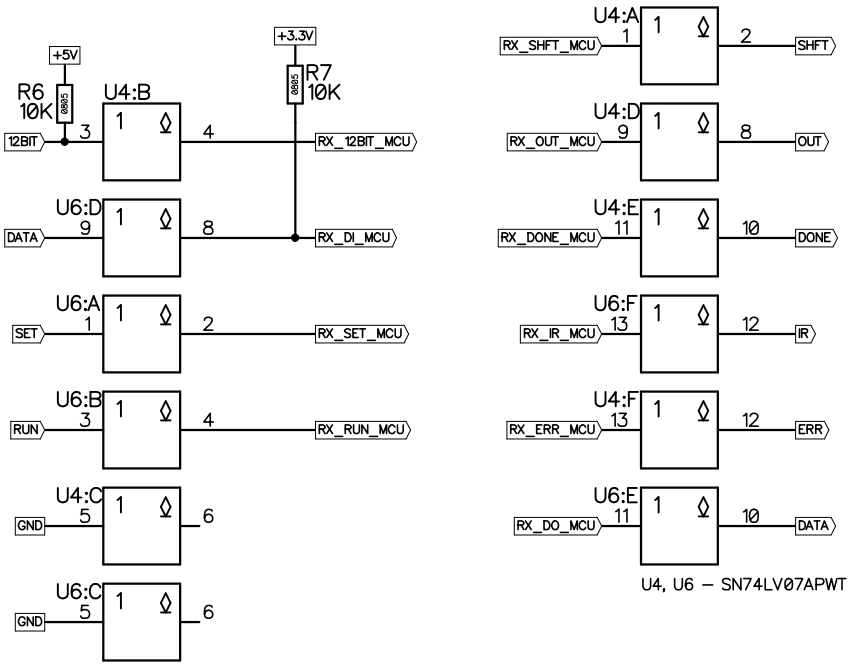

						Sheet
						2
		Doc.Nr.	Sign.	Date		