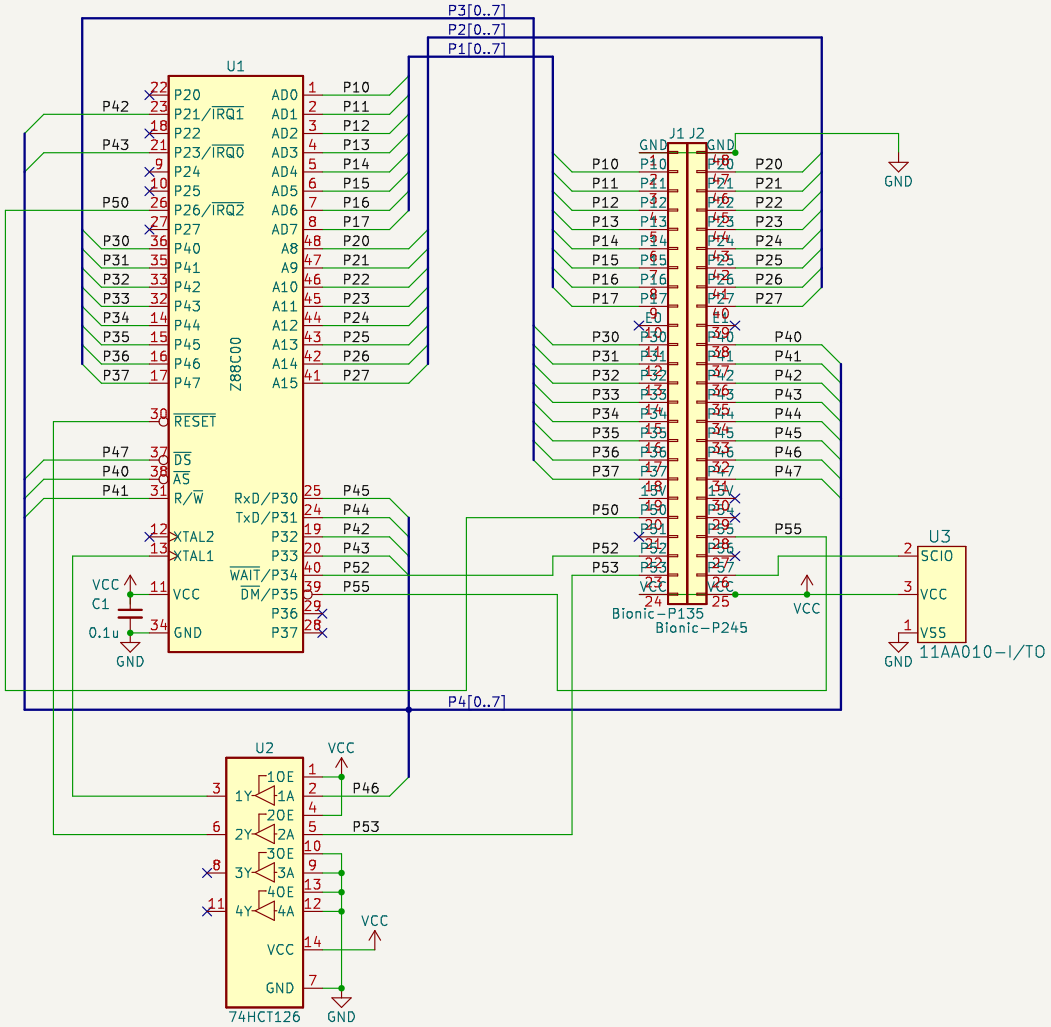

Tadashi G. Takaoka

Sheet: /

File: bionic-z8800.kicad_sch

Title: BionicZ8800

Size: A4	Date: 2022-01-18	Rev: 1
KiCad E.D.A. kicad 7.0.10-7.0.10~ubuntu22.04.1		Id: 1/1