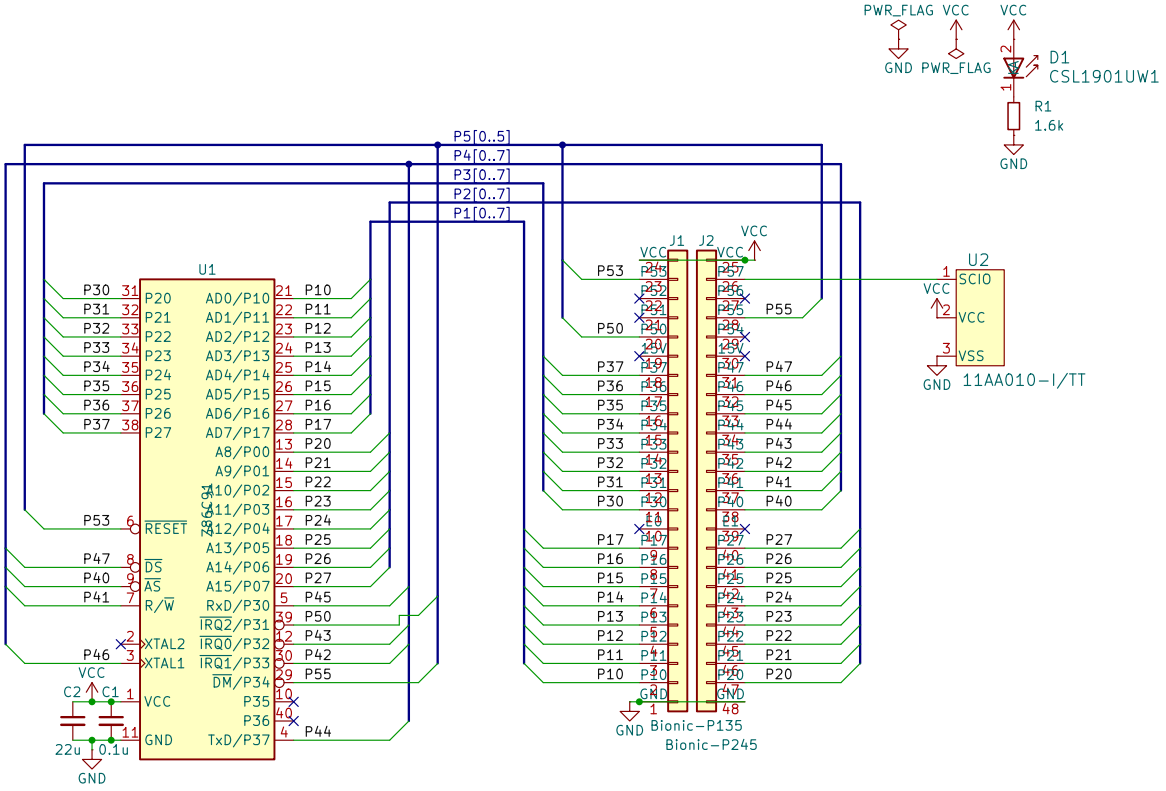

Tadashi G. Takaoka

Sheet: /

File: bionic-z8691.kicad_sch

Title: BionicZ8691

Size: A4	Date: 2024-12-19	**Rev: 7**
KiCad E.D.A. 8.0.4		Id: 1/1