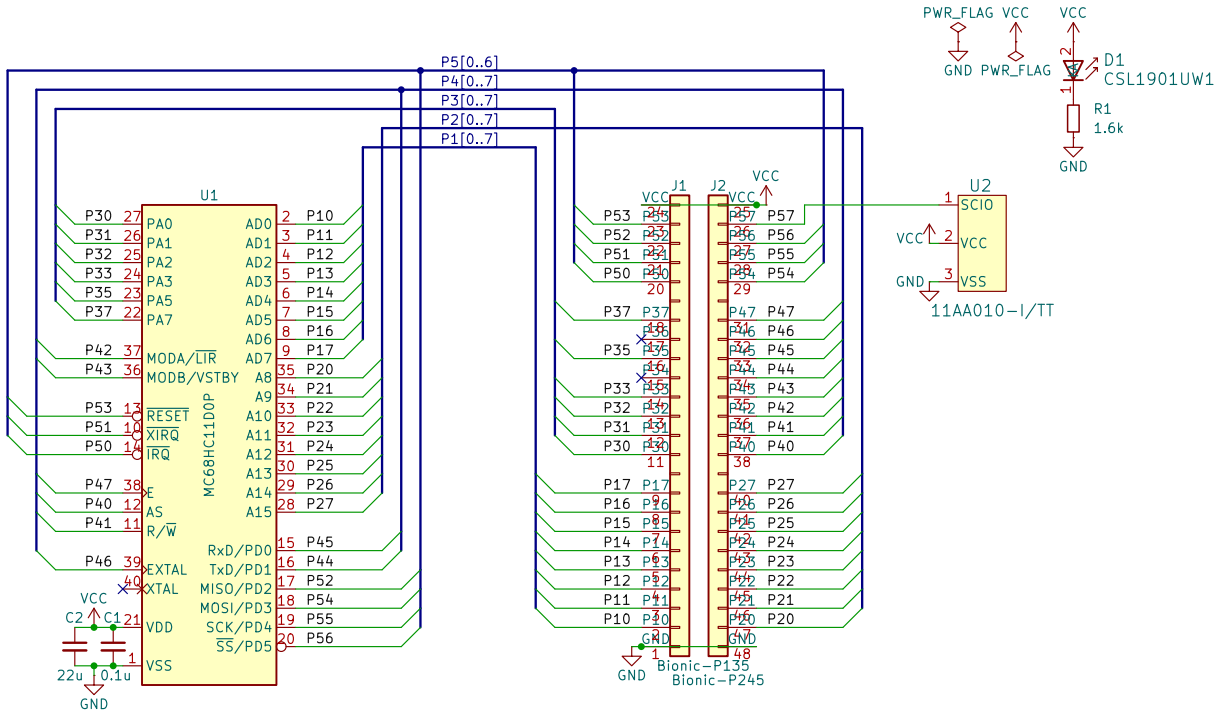

Tadashi G. Takaoka

Sheet: /

File: bionic-mc68hc11d.kicad_sch

Title: BionicMC68HC11D

Size: A4	Date: 2025-03-02	**Rev: 9**
KiCad E.D.A. 8.0.4		Id: 1/1