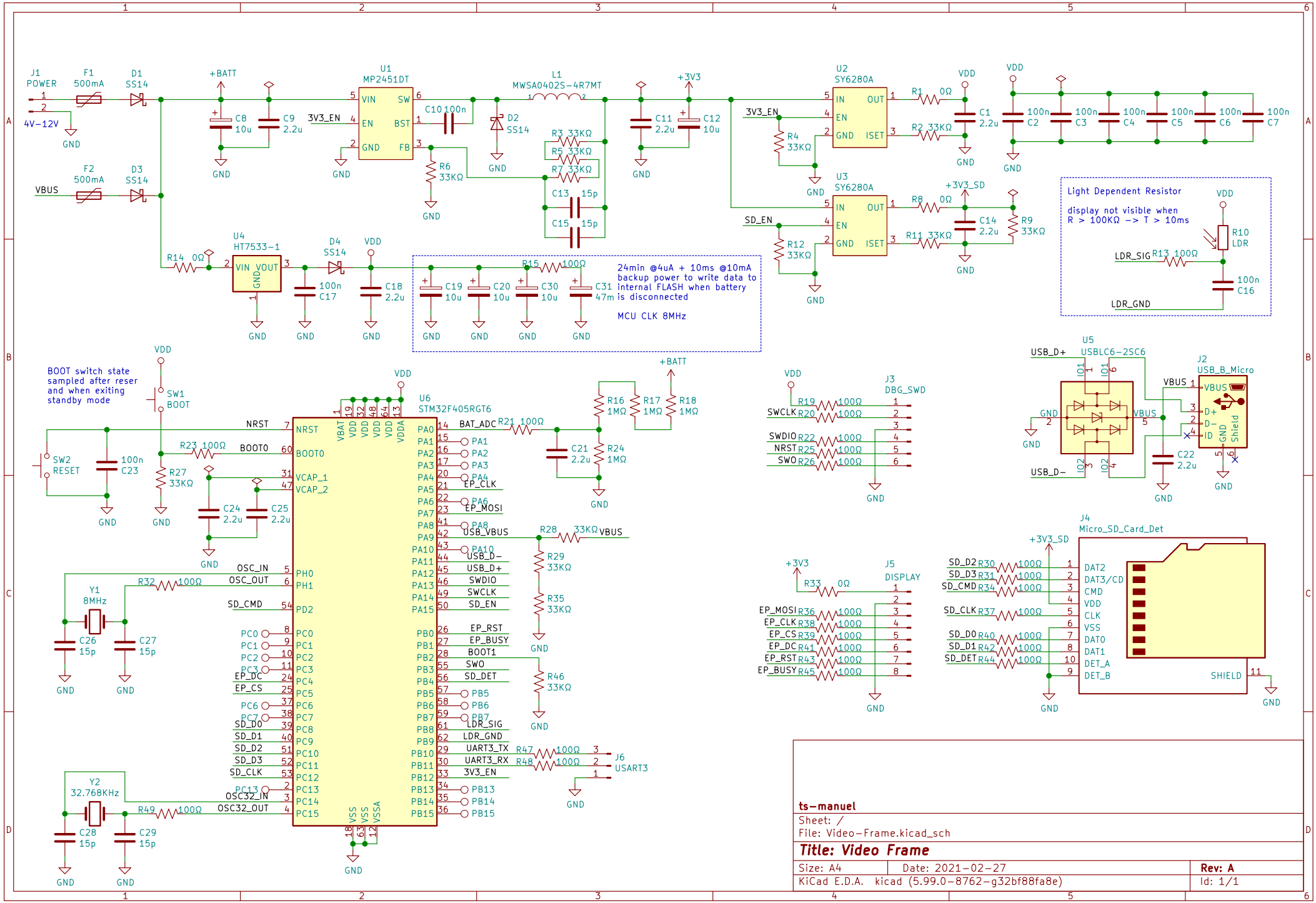

ts–manuel

Sheet: /

File: Video–Frame.kicad_sch

Title: Video Frame

Size: A4	Date: 2021–02–27	Rev: A
KiCad E.D.A. kicad (5.99.0–8762–g32bf88fa8e)		Id: 1/1