ETSI TS 125 105 V12.1.0 (2015-01)

TECHNICAL SPECIFICATION

Universal Mobile Telecommunications System (UMTS); Base Station (BS) radio transmission and reception (TDD) (3GPP TS 25.105 version 12.1.0 Release 12)

Reference
RTS/TSGR-0425105vc10

Keywords
UMTS

ETSI

650 Route des Lucioles
F-06921 Sophia Antipolis Cedex - FRANCE

Tel.: +33 4 92 94 42 00 Fax: +33 4 93 65 47 16

Siret N° 348 623 562 00017 - NAF 742 C
Association à but non lucratif enregistrée à la
Sous-Préfecture de Grasse (06) N° 7803/88

Important notice

The present document can be downloaded from:
http://www.etsi.org

The present document may be made available in electronic versions and/or in print. The content of any electronic and/or print versions of the present document shall not be modified without the prior written authorization of ETSI. In case of any existing or perceived difference in contents between such versions and/or in print, the only prevailing document is the print of the Portable Document Format (PDF) version kept on a specific network drive within ETSI Secretariat.

Users of the present document should be aware that the document may be subject to revision or change of status. Information on the current status of this and other ETSI documents is available at
http://portal.etsi.org/tb/status/status.asp

If you find errors in the present document, please send your comment to one of the following services:
http://portal.etsi.org/chaircor/ETSI_support.asp

Copyright Notification

No part may be reproduced or utilized in any form or by any means, electronic or mechanical, including photocopying and microfilm except as authorized by written permission of ETSI.
The content of the PDF version shall not be modified without the written authorization of ETSI.
The copyright and the foregoing restriction extend to reproduction in all media.

© European Telecommunications Standards Institute 2015.
All rights reserved.

DECTTM, **PLUGTESTS**TM, **UMTS**TM and the ETSI logo are Trade Marks of ETSI registered for the benefit of its Members.
3GPPTM and **LTE**™ are Trade Marks of ETSI registered for the benefit of its Members and of the 3GPP Organizational Partners.
GSM® and the GSM logo are Trade Marks registered and owned by the GSM Association.

Intellectual Property Rights

IPRs essential or potentially essential to the present document may have been declared to ETSI. The information pertaining to these essential IPRs, if any, is publicly available for **ETSI members and non-members**, and can be found in ETSI SR 000 314: *"Intellectual Property Rights (IPRs); Essential, or potentially Essential, IPRs notified to ETSI in respect of ETSI standards"*, which is available from the ETSI Secretariat. Latest updates are available on the ETSI Web server (http://ipr.etsi.org).

Pursuant to the ETSI IPR Policy, no investigation, including IPR searches, has been carried out by ETSI. No guarantee can be given as to the existence of other IPRs not referenced in ETSI SR 000 314 (or the updates on the ETSI Web server) which are, or may be, or may become, essential to the present document.

Foreword

This Technical Specification (TS) has been produced by ETSI 3rd Generation Partnership Project (3GPP).

The present document may refer to technical specifications or reports using their 3GPP identities, UMTS identities or GSM identities. These should be interpreted as being references to the corresponding ETSI deliverables.

The cross reference between GSM, UMTS, 3GPP and ETSI identities can be found under http://webapp.etsi.org/key/queryform.asp.

Modal verbs terminology

In the present document "**shall**", "**shall not**", "**should**", "**should not**", "**may**", "**may not**", "**need**", "**need not**", "**will**", "**will not**", "**can**" and "**cannot**" are to be interpreted as described in clause 3.2 of the ETSI Drafting Rules (Verbal forms for the expression of provisions).

"**must**" and "**must not**" are **NOT** allowed in ETSI deliverables except when used in direct citation.

Contents

Intellectual Property Rights 2

Foreword 2

Modal verbs terminology 2

Foreword 8

1 Scope 9

2 References 9

3 Definitions, symbols and abbreviations 9
3.1 Definitions 9
3.2 (void) 11
3.3 Abbreviations 11

4 General 12
4.1 Relationship between Minimum Requirements and Test Requirements 12
4.2 Base station classes 12
4.3 Regional requirements 12
4.4 Environmental requirements for the BS equipment 13
4.5 MBSFN-only operation 13
4.6 Requirements for BS capable of multi-band operation 14

5 Frequency bands and channel arrangement 14
5.1 General 14
5.2 Frequency bands 14
5.3 TX-RX frequency separation 14
5.3.1 3,84 Mcps TDD Option 14
5.3.2 1,28 Mcps TDD Option 15
5.3.3 7.68 Mcps TDD Option 15
5.4 Channel arrangement 15
5.4.1 Channel spacing 15
5.4.1.1 3,84 Mcps TDD Option 15
5.4.1.2 1,28 Mcps TDD Option 15
5.4.1.3 7.68 Mcps TDD Option 15
5.4.2 Channel raster 15
5.4.2.1 3.84 Mcps TDD Option 15
5.4.2.2 7.68 Mcps TDD Option 15
5.4.3 Channel number 15

6 Transmitter characteristics 16
6.1 General 16
6.2 Base station output power 16
6.2.1 Base station maximum output power 17
6.2.1.1 Minimum Requirement 17
6.3 Frequency stability 17
6.3.1 Minimum Requirement 17
6.3.1.1 3,84 Mcps TDD Option 17
6.3.1.2 1,28 Mcps TDD Option 17
6.3.1.3 7,68 Mcps TDD Option 17
6.4 Output power dynamics 18
6.4.1 Inner loop power control 18
6.4.2 Power control steps 18
6.4.2.1 Minimum Requirement 18
6.4.3 Power control dynamic range 18
6.4.3.1 Minimum Requirement 18
6.4.4 Minimum output power 18
6.4.4.1 Minimum Requirement 18

6.4.5 Primary CCPCH power 19
6.4.6 Differential accuracy of Primary CCPCH power....19
6.4.6.1 Minimum Requirement for Differential accuracy of PCCPCH power 19
6.5 Transmit ON/OFF power 19
6.5.1 Transmit OFF power....19
6.5.1.1 Minimum Requirement....19
6.5.1.1.1 3,84 Mcps TDD Option....19
6.5.1.1.2 1,28 Mcps TDD Option....19
6.5.1.1.3 7,68 Mcps TDD Option....19
6.5.2 Transmit ON/OFF Time mask....19
6.5.2.1 Minimum Requirement....20
6.5.2.1.1 3,84 Mcps TDD Option....20
6.5.2.1.2 1,28 Mcps TDD Option....20
6.5.2.1.3 7,68 Mcps TDD Option....20
6.6 Output RF spectrum emissions....21
6.6.1 Occupied bandwidth 21
6.6.1.1 3,84 Mcps TDD Option....21
6.6.1.2 1,28 Mcps TDD Option....21
6.6.1.3 7,68 Mcps TDD Option....21
6.6.2 Out of band emission 21
6.6.2.1 Spectrum emission mask....21
6.6.2.1.1 3,84 Mcps TDD Option....21
6.6.2.1.2 1,28 Mcps TDD Option....23
6.6.2.1.3 7,68 Mcps TDD Option....25
6.6.2.2 Adjacent Channel Leakage power Ratio (ACLR)....27
6.6.2.2.1 Minimum Requirement 28
6.6.2.2.2 Void....29
6.6.2.2.3 Void....29
6.6.3 Spurious emissions 29
6.6.3.1 Mandatory Requirements....30
6.6.3.1.1 Spurious emissions (Category A) 30
6.6.3.1.2 Spurious emissions (Category B) 31
6.6.3.2 Co-existence with GSM, DCS, UTRA and/or E-UTRA....32
6.6.3.2.1 Operation in the same geographic area....32
6.6.3.2.2 Co-located base stations 35
6.6.3.3 Void....36
6.6.3.3.1 Void....36
6.6.3.3.2 Void....36
6.6.3.4 Void....37
6.6.3.4.1 Void....37
6.6.3.4.2 Void....37
6.6.3.5 Co-existence with unsynchronised UTRA TDD and/or E-UTRA TDD 37
6.6.3.5.1 Operation in the same geographic area....37
6.6.3.5.2 Co-located base stations 39
6.6.3.6 Co-existence with PHS 42
6.6.3.6.1 Minimum Requirement 43
6.7 Transmitter intermodulation....43
6.7.1 Minimum Requirement....43
6.7.1.1 3,84 Mcps TDD Option....43
6.7.1.2 1,28 Mcps TDD Option: 43
6.7.1.3 7,68 Mcps TDD Option....44
6.8 Transmit modulation 44
6.8.1 Transmit pulse shape filter....44
6.8.2 Modulation Accuracy 44
6.8.2.1 Minimum Requirement....45
6.8.3 Peak Code Domain Error....45
6.8.3.1 Minimum Requirement....45
6.8.4 Relative Code Domain Error for 64QAM modulation....45
6.8.4.1 Minimum requirement 45
6.8.5 Time alignment error in MIMO transmission....45
6.8.5.1 Minimum Requirement....45

7 Receiver characteristics 45
7.1 General 45
7.2 Reference sensitivity level....46
7.2.1 Minimum Requirement....46
7.2.1.1 3,84 Mcps TDD Option....46
7.2.1.2 1,28 Mcps TDD Option....46
7.2.1.3 7,68 Mcps TDD Option....47
7.3 Dynamic range 47
7.3.1 Minimum requirement 47
7.3.1.1 3,84 Mcps TDD Option....47
7.3.1.2 1,28 Mcps TDD Option: 47
7.3.1.3 7,68 Mcps TDD Option....47
7.4 Adjacent Channel Selectivity (ACS) 48
7.4.1 Minimum Requirement....48
7.4.1.1 3,84 Mcps TDD Option....48
7.4.1.2 1,28 Mcps TDD Option....48
7.4.1.3 7,68 Mcps TDD Option....48
7.5 Blocking characteristics 49
7.5.0 Minimum requirement 49
7.5.0.1 3,84 Mcps TDD Option....49
7.5.0.2 1,28 Mcps TDD Option....51
7.5.0.3 7,68 Mcps TDD Option....55
7.5.1 Co-location with GSM, DCS, UTRA FDD and/or E-UTRA FDD, UTRA TDD and/or E-UTRA TDD 57
7.5.1.1 3,84 Mcps TDD Option....57
7.5.1.2 1,28 Mcps TDD Option....58
7.5.1.3 7,68 Mcps TDD Option....59
7.5.2 Void 60
7.5.2.1 Void....60
7.5.2.2 Void....60
7.5.2.3 Void....60
7.6 Intermodulation characteristics 60
7.6.1 Minimum requirement 60
7.6.1.1 3,84 Mcps TDD Option....60
7.6.1.2 1,28 Mcps TDD Option....60
7.6.1.3 7,68 Mcps TDD Option....61
7.7 Spurious emissions....61
7.7.1 Minimum Requirement....61
7.7.1.1 3,84 Mcps TDD Option....61
7.7.1.2 1,28 Mcps TDD Option....62
7.7.1.3 7,68 Mcps TDD Option....63

8 Performance requirement 63
8.1 General 63
8.2 Demodulation in static propagation conditions 64
8.2.1 Demodulation of DCH....64
8.2.1.1 Minimum requirement 64
8.2.1.1.1 3,84 Mcps TDD Option....64
8.2.1.1.2 1,28 Mcps TDD Option....65
8.2.1.1.3 7,68 Mcps TDD Option....65
8.3 Demodulation of DCH in multipath fading conditions 66
8.3.1 Multipath fading Case 1....66
8.3.1.1 Minimum requirement 66
8.3.1.1.1 3,84 Mcps TDD Option....66
8.3.1.1.2 1,28 Mcps TDD Option....66
8.3.1.1.3 7,68 Mcps TDD Option....67
8.3.2 Multipath fading Case 2....68
8.3.2.1 Minimum requirement 68
8.3.2.1.1 3,84 Mcps TDD Option....68
8.3.2.1.2 1,28 Mcps TDD Option....68
8.3.2.1.3 7,68 Mcps TDD Option....69
8.3.3 Multipath fading Case 3....70

8.3.3.1 Minimum requirement 70
8.3.3.1.1 3,84 Mcps TDD Option....70
8.3.3.1.2 1,28 Mcps TDD Option....70
8.3.3.1.3 7,68 Mcps TDD Option....71
8.3A Demodulation of DCH in High speed train conditions....72
8.3A.1 General 72
8.3A.2 Minimum requirement....72
8.3A.2.1 3,84 Mcps TDD Option....72
8.3A.2.2 1.28 Mcps TDD Option....72
8.3A.2.3 7.68 Mcps TDD Option....73
8.4 Demodulation of E-DCH FRC in multipath fading conditions 73
8.4.1 Minimum requirement 73
8.4.1.1 3.84 Mcps TDD Option....73
8.4.1.2 1.28 Mcps TDD Option....74
8.4.1.3 7.68 Mcps TDD Option....75
8.5 Performance of ACK detection for HS-SICH 77
8.5.1 Minimum requirement....77
8.5.1.1 3.84 Mcps TDD Option....77
8.5.1.2 1.28 Mcps TDD Option....77

Annex A (normative): Measurement Channels....79

A.1 (void) 79

A.2 Reference measurement channel....79
A.2.1 UL reference measurement channel (12.2 kbps) 79
A.2.1.1 3,84 Mcps TDD Option 79
A.2.1.2 1,28 Mcps TDD Option 80
A.2.1.3 7,68 Mcps TDD Option 81
A.2.2 UL reference measurement channel (64 kbps) 82
A.2.2.1 3,84 Mcps TDD Option 82
A.2.2.2 1,28 Mcps TDD Option 84
A.2.2.3 7,68 Mcps TDD Option 85
A.2.3 UL reference measurement channel (144 kbps) 86
A.2.3.1 3,84 Mcps TDD Option 86
A.2.3.2 1,28 Mcps TDD Option 88
A.2.3.3 7,68 Mcps TDD Option 89
A.2.4 UL reference measurement channel (384 kbps) 90
A.2.4.1 3,84 Mcps TDD Option 90
A.2.4.2 1,28 Mcps TDD Option 92
A.2.4.3 7,68 Mcps TDD Option 93
A.2.5 RACH reference measurement channel 94
A.2.5.0 General....94
A.2.5.0.1 3,84 Mcps TDD Option....94
A.2.5.0.2 1,28 Mcps TDD Option....94
A.2.5.0.3 7,68 Mcps TDD Option....95
A.2.5.1 RACH mapped to 1 code SF16....96
A.2.5.1.1 3,84 Mcps TDD Option....96
A.2.5.1.2 1,28 Mcps TDD Option....96
A.2.5.1.3 7,68 Mcps TDD Option....97
A.2.5.2 RACH mapped to 1 code SF8....97
A.2.5.2.1 3,84 Mcps TDD Option....97
A.2.5.2.2 1,28 Mcps TDD Option....98
A.2.5.3 RACH mapped to 1 code SF4 (1,28 Mcps option only) 98
A.2.5.4 RACH mapped to 1 code SF32 (7,68 Mcps option only) 99

A.3 E-DCH Reference measurement channels 99
A.3.1 E-DCH Fixed Reference Channels....99
A.3.1.1 3,84 Mcps TDD Option 99
A.3.1.1.1 Fixed Reference Channel 1 (FRC1) 99
A.3.1.1.2 Fixed Reference Channel 2 (FRC2) 100
A.3.1.1.3 Fixed Reference Channel 3 (FRC3) 101
A.3.1.2 1.28Mcps TDD Option 102

A3.1.2.1 Fixed reference channel 1 (FRC1) 102
A3.1.2.2 Fixed reference channel 2(FRC2) 103
A3.1.2.3 Fixed reference channel 3(FRC3) 104
A3.1.2.4 Fixed reference channel 4(FRC4).......... 105
A.3.1.3 7,68 Mcps TDD Option 106
A.3.1.3.1 Fixed Reference Channel 1 (FRC1) 106
A.3.1.3.2 Fixed Reference Channel 2 (FRC2) 107
A.3.1.3.3 Fixed Reference Channel 3 (FRC3) 108

A.4 HS-SICH Reference measurement channels 109
A.4.1 3.84 Mcps TDD Option 109
A.4.2 1.28 Mcps TDD Option 109

Annex B (normative): Propagation conditions 112

B.1 Static propagation condition 112

B.2 Multi-path fading propagation conditions 112
B.2.1 3,84 Mcps TDD Option 112
B.2.2 1,28 Mcps TDD Option 112
B.2.3 7,68 Mcps TDD Option 113

B.3 High speed train conditions 114

Annex C (informative): Change history 116

History 120

Foreword

This Technical Specification (TS) has been produced by the 3rd Generation Partnership Project (3GPP).

The contents of the present document are subject to continuing work within the TSG and may change following formal TSG approval. Should the TSG modify the contents of the present document, it will be re-released by the TSG with an identifying change of release date and an increase in version number as follows:

Version x.y.z

where:

- x the first digit:
  - 1 presented to TSG for information;
  - 2 presented to TSG for approval;
  - 3 or greater indicates TSG approved document under change control.
- y the second digit is incremented for all changes of substance, i.e. technical enhancements, corrections, updates, etc.
- z the third digit is incremented when editorial only changes have been incorporated in the document.

1 Scope

This document establishes the minimum RF characteristics of all three options of the TDD mode of UTRA. The three options are the 3.84 Mcps, 1.28 Mcps and 7.68 Mcps options respectively. The requirements are listed in different subsections only if the parameters deviate.

2 References

The following documents contain provisions which, through reference in this text, constitute provisions of the present document.

- References are either specific (identified by date of publication, edition number, version number, etc.) or non-specific.
- For a specific reference, subsequent revisions do not apply.
- For a non-specific reference, the latest version applies. In the case of a reference to a 3GPP document (including a GSM document), a non-specific reference implicitly refers to the latest version of that document *in the same Release as the present document*.

[1] ITU-R Recommendation SM.329: "Unwanted emissions in the spurious domain".

[2] ETSI ETR 273-1-2: "Electromagnetic compatibility and Radio spectrum Matters (ERM); Improvement of radiated methods of measurement (using test sites) and evaluation of the corresponding measurement uncertainties; Part 1: Uncertainties in the measurement of mobile radio equipment characteristics; Sub-part 2: Examples and annexes".

[3] IEC 60721-3-3 (1994): "Classification of environmental conditions - Part 3: Classification of groups of environmental parameters and their severities - Section 3: Stationary use at weather protected locations".

[4] IEC 60721-3-4 (1995): "Classification of environmental conditions - Part 3: Classification of groups of environmental parameters and their severities - Section 4: Stationary use at non-weather protected locations".

[5] 3GPP TS 25.142: "Base station conformance testing (TDD)".

[6] 3GPP TS 25.346: "Introduction of the Multimedia Broadcast/Multicast Service (MBMS) in the Radio Access Network (RAN)".

[7] 3GPP TS 36.104: "Evolved Universal Terrestrial Radio Access (E-UTRA); Base Station (BS) radio transmission and reception".

[8] 3GPP TR 25.942 "Radio Frequency RF System Scenarios".

3 Definitions, symbols and abbreviations

3.1 Definitions

For the purposes of the present document, the following definitions apply.

Base Station RF bandwidth: The bandwidth in which a Base Station simultaneously transmits and simultaneously receives multiple carriers within each supported operating band.

Base Station RF bandwidth edge: The frequency of one of the edges of the Base Station RF bandwidth.

Power Spectral Density: The units of Power Spectral Density (PSD) are extensively used in this document. PSD is a function of power versus frequency and when integrated across a given bandwidth, the function represents the mean

power in such a bandwidth. When the mean power is normalised to (divided by) the chip-rate it represents the mean energy per chip. Some signals are directly defined in terms of energy per chip, (DPCH_Ec, Ec, and P-CCPCH_Ec) and others defined in terms of PSD (Io, Ioc, Ior and Îor). There also exist quantities that are a ratio of energy per chip to PSD (DPCH_Ec/Ior, Ec/Ior etc.). This is the common practice of relating energy magnitudes in communication systems.
It can be seen that if both energy magnitudes in the ratio are divided by time, the ratio is converted from an energy ratio to a power ratio, which is more useful from a measurement point of view. It follows that an energy per chip of X dBm/3.84 MHz (3.84 Mcps TDD option) or X dBm/1.28 MHz (1.28 Mcps TDD option) can be expressed as a mean power per chip of X dBm. Similarly, a signal PSD of Y dBm/3.84 MHz (3.84 Mcps TDD option) or Y dBm/1.28 MHz (1.28 Mcps TDD option) can be expressed as a signal power of Y dBm.

Mean power: When applied to a CDMA modulated signal this is the power (transmitted or received) in a bandwidth of at least (1+ α) times the chip rate of the radio access mode. The period of measurement shall be a transmit timeslot excluding the guard period unless otherwise stated.

NOTE: The roll-off factor α is defined in section 6.8.1.

Operating band: A frequency range in which UTRA TDD operates (paired or unpaired), that is defined with a specific set of technical requirements.

NOTE: The operating band(s) for an UTRA TDD BS is declared by the manufacturer according to the designations in subclause 5.2.

RRC filtered mean power: The mean power as measured through a root raised cosine filter with roll-off factor α and a bandwidth equal to the chip rate of the radio access mode.

NOTE: The RRC filtered mean power of a perfectly modulated CDMA signal is 0.246 dB lower than the mean power of the same signal.

Code domain power: That part of the mean power which correlates with a particular (OVSF) code channel. The sum of all powers in the code domain equals the mean power in a bandwidth of (1+ α) times the chip rate of the radio access mode.

Highest Carrier: The carrier with the highest carrier centre frequency transmitted/received in a specified operating band.

Output power, Pout: The mean power of one carrier of the base station, delivered to a load with resistance equal to the nominal load impedance of the transmitter.

Lower RF bandwidth edge: The frequency of the lower of the Base station RF bandwidth, used as a frequency reference point for transmitter and receiver requirements.

Lowest Carrier: The carrier with the lowest carrier centre frequency transmitted/received in a specified operating band.

Inter RF bandwidth gap: The frequency gap between two consecutive RF bandwidths that are placed within two supported operating bands.

Multi-band Base Station: Base Station characterized by the ability of its transmitter and/or receiver to process two or more carriers in common active RF components simultaneously, where at least one carrier is configured at a different non-overlapping operating band than the other carrier(s).

Multi-band transmitter: Transmitter characterized by the ability to process two or more carriers in common active RF components simultaneously, where at least one carrier is configured at a different non-overlapping operating band than the other carrier(s).

Multi-band receiver: Receiver characterized by the ability to process two or more carriers in common active RF components simultaneously, where at least one carrier is configured at a different non-overlapping operating band than the other carrier(s).

Maximum output power: The mean power level per carrier of the base station measured at the antenna connector in a specified reference condition. The period of measurement shall be a transmit timeslot excluding the guard period.

Rated output power: Rated output power of the base station is the mean power level per carrier that the manufacturer has declared to be available at the antenna connector.

Radio bandwidth: Frequency difference between the upper edge of the highest used carrier and the lower edge of the lowest used carrier.

Synchronized operation: Operation of TDD in two different systems, where no simultaneous uplink and downlink occur.

Total power dynamic range: The difference between the maximum and the minimum output power of the base station for a specified reference condition.

Synchronized operation: Operation of TDD in two different systems, where no simultaneous uplink and downlink occur.

MBSFN-only operation: Operation of a dedicated carrier solely for the purposes of MBSFN transmission.

Upper RF bandwidth edge: The frequency of the upper edge of the Base Station RF Bandwidth; used as a frequency reference point for transmitter and receiver requirements.

Unsynchronized operation: Operation of TDD in two different systems, where the conditions for synchronized operation are not met.

3.2 (void)

3.3 Abbreviations

For the purposes of the present document, the following abbreviations apply:

ACIR	Adjacent Channel Interference Ratio
ACLR	Adjacent Channel Leakage power Ratio
ACS	Adjacent Channel Selectivity
BER	Bit Error Rate
BS	Base Station
CW	Continuous wave (unmodulated signal)
DL	Down link (forward link)
$DPCH_o$	A mechanism used to simulate an individual intracell interferer in the cell with one code and a spreading factor of 16
$\frac{DPCH_o\_E_c}{I_{or}}$	The ratio of the average transmit energy per PN chip for the $DPCH_o$ to the total transmit power spectral density of all users in the cell in one timeslot as measured at the BS antenna connector
EIRP	Effective Isotropic Radiated Power
FDD	Frequency Division Duplexing
FER	Frame Error Rate
HSUPA	High Speed Uplink Packet Access
IMB	Integrated Mobile Broadcast
I_{oc}	The power spectral density (integrated in a noise bandwidth equal to the chip rate and normalized to the chip rate) of a band limited white noise source (simulating interference from other cells) as measured at the BS antenna connector.
$\hat{I}_{or}$	The received power spectral density (integrated in a bandwidth $(1+\alpha)$ times the chip rate and normalized to the chip rate) of all users in the cell in one timeslot as measured at the BS antenna connector
MBMS	Multimedia Broadcast Multicast Service
MBSFN	MBMS over a Single Frequency Network MC-HSDPA Multi-carrier HSDPA
MC-HSUPA	Multi-carrier HSUPA
PPM	Parts Per Million
Pout	Output power.
PRAT	Rated Output power
RSSI	Received Signal Strength Indicator
SIR	Signal to Interference ratio
TDD	Time Division Duplexing
TPC	Transmit Power Control
UE	User Equipment

UL	Up link (reverse link)
UTRA	UMTS Terrestrial Radio Access
W_{gap}	Inter RF bandwidth gap size

4 General

4.1 Relationship between Minimum Requirements and Test Requirements

The Minimum Requirements given in this specification make no allowance for measurement uncertainty. The test specification 25.142 section 5.9.6 defines Test Tolerances. These Test Tolerances are individually calculated for each test. The Test Tolerances are used to relax the Minimum Requirements in this specification to create Test Requirements. The measurement results returned by the Test System are compared -without any modification- against the Test Requirements as defined by the shared risk principle.

The Shared Risk principle is defined in ETR 273 Part 1 sub-part 2 section 6.5.

4.2 Base station classes

The requirements in this specification apply to Wide Area Base Stations, Local Area Base Stations and Home BS in co-ordinated network operation, unless otherwise stated.

Wide Area Base Stations are characterised by requirements derived from Macro Cell and Micro Cell scenarios with BS to UE coupling losses equal to 70 dB and 53 dB. The Wide Area Base Station has the same requirements as the base station for General Purpose application in Release 99 for 3.84 Mcps option, and in Release 4 for both 3.84 Mcps and 1.28 Mcps option.

Local Area Base Stations are characterised by requirements derived from Pico Cell scenarios with a BS to UE coupling loss equals to 45 dB.

Home Base Stations are characterised by requirements derived from Femto Cell scenarios.

4.3 Regional requirements

Some requirements in TS 25.105 may only apply in certain regions. Table 4.1 lists all requirements that may be applied differently in different regions.

Table 4.1: List of regional requirements.

Clause number	Requirement	Comments
4.2	Base station classes	Only requirements for Wide Area Base Stations shall be applied as regional requirements in Japan.
5.1	General	Only 3.84Mcps and 7.68Mcps TDD options are currently applicable in Japan
5.2	Frequency bands	Some bands may be applied regionally.
6.2.1	Base station maximum output power	In certain regions, the minimum requirement for normal conditions may apply also for some conditions outside the range of conditions defined as normal.
6.6.2.1	Spectrum emission mask	The mask specified may be mandatory in certain regions. In other regions this mask may not be applied.
6.6.3.1.1	Spurious emissions (Category A)	These requirements shall be met in cases where Category A limits for spurious emissions, as defined in ITU-R Recommendation SM.329 [1], are applied.
6.6.3.1.2	Spurious emissions (Category B)	These requirements shall be met in cases where Category B limits for spurious emissions, as defined in ITU-R Recommendation SM.329 [1], are applied.
6.6.3.2.1	Co-existence with GSM, DCS, UTRA and /or E-UTRA -Operation in the same geographic area	This requirement may be applied for the protection of other BS or UE receivers when GSM, DCS, UTRA and/or E-UTRA BS are operating in the same geographic area with a UTRA TDD BS.
6.6.3.2.2	Co-existence with GSM, DCS, UTRA, and/or E-UTRA - Co-located base stations	This requirement may be applied for the protection of ohter BS receivers when GSM, DCS, UTRA and/or E-UTRA BS are co-located with a UTRA TDD BS.
6.6.3.5.1	Co-existence with unsynchronized TDD - Operation in the same geographic area	This requirement may be applied for the protection of UTRA-TDD BS receivers in same geographic areas in which unsynchronized TDD is deployed.
6.6.3.5.2	Co-existence with unsynchronized TDD -Co-located base stations	This requirement may be applied for the protection of UTRA-TDD BS receivers when UTRA-TDD BS are unsynchronized co-located.
6.6.3.6	Co-existence with PHS	This requirement may be applied for the protection of PHS in geographic areas in which both PHS and 3.84 Mcps and 7.68 Mcps UTRA TDD are deployed.
7.5	Blocking characteristic	The requirement is applied according to what frequency bands in Clause 5.2 that are supported by the BS.
7.5.1	Blocking characteristic Co-location with GSM900 and/or DCS 1800	This requirement may be applied for the protection of UTRA TDD BS receivers when UTRA TDD BS and GSM 900/DCS1800 BS are co-located.

4.4 Environmental requirements for the BS equipment

The BS equipment shall fulfil all the requirements in the full range of environmental conditions for the relevant environmental class from the relevant IEC specifications listed below:

IEC 60 721-3-3 "Stationary use at weather protected locations" [3]

IEC 60 721-3-4 "Stationary use at non weather protected locations" [4]

Normally it should be sufficient for all tests to be conducted using normal test conditions except where otherwise stated. For guidance on the use of test conditions to be used in order to show compliance refer to TS 25.142 [5].

4.5 MBSFN-only operation

Only relevant sections are applicable to MBSFN-only operation (which also includes IMB [6]). Furthermore, for the case of IMB, only the 3.84Mcps TDD option shall apply. In the case of section 6 this contains subclauses with explicit indication of which requirements are not applicable to MBSFN-only operation.

4.6 Requirements for BS capable of multi-band operation

For BS capable of multi-band operation, the RF requirements in clause 6 and 7 apply for each supported operating band unless otherwise stated. For some requirements it is explicitly stated that specific additions or exclusions to the requirement apply for BS capable of multi-band operation. In the case where multiple bands are mapped on separate antenna connectors, the following applies:

- Single-band transmitter spurious emissions, operating band unwanted emissions, ACLR, transmitter intermodulation and receiver spurious emissions requirements apply to each antenna connector.
- If the BS is configured for single-band operation, single-band requirements shall apply to the antenna connector configured for single-band operation and no exclusions or provisions for multi-band capable BS are applicable. Single-band requirements are tested separately at the antenna connector configured for single-band operation, with all other antenna connectors terminated.

For BS capable of multi-band operation, the RF requirements in the present specification assume synchronized operation, where no simultaneous uplink and downlink occur between the supported operating bands.

5 Frequency bands and channel arrangement

5.1 General

The information presented in this section is based on the chip rates of 3.84 Mcps, 1.28 Mcps and 7.68 Mcps TDD.

NOTE: Other chip rates may be considered in future releases.

5.2 Frequency bands

UTRA/TDD is designed to operate in the following bands;

a) 1900 - 1920 MHz: Uplink and downlink transmission

2010 - 2025 MHz Uplink and downlink transmission

b) 1850 - 1910 MHz Uplink and downlink transmission

1930 - 1990 MHz Uplink and downlink transmission

c) 1910 - 1930 MHz Uplink and downlink transmission

d) 2570 - 2620 MHz Uplink and downlink transmission

e) 2300 - 2400 MHz Uplink and downlink transmission

f) 1880 - 1920 MHz: Uplink and downlink transmission

Note 1: Deployment in existing and other frequency bands is not precluded.

Note 2: In China, Band a only includes 2010 - 2025 MHz for 1.28 Mcps TDD option.

The co-existence of TDD and FDD in the same bands is still under study in WG4.

5.3 TX-RX frequency separation

5.3.1 3,84 Mcps TDD Option

No TX-RX frequency separation is required as Time Division Duplex (TDD) is employed. Each TDMA frame consists of 15 timeslots where each timeslot can be allocated to either transmit or receive.

5.3.2 1,28 Mcps TDD Option

No TX-RX frequency separation is required as Time Division Duplex (TDD) is employed. Each subframe consists of 7 main timeslots where all main timeslots (at least the first one) before the single switching point are allocated DL and all main timeslots (at least the last one) after the single switching point are allocated UL.

5.3.3 7.68 Mcps TDD Option

No TX-RX frequency separation is required as Time Division Duplex (TDD) is employed. Each TDMA frame consists of 15 timeslots where each timeslot can be allocated to either transmit or receive.

5.4 Channel arrangement

5.4.1 Channel spacing

5.4.1.1 3,84 Mcps TDD Option

The nominal channel spacing is 5 MHz, but this can be adjusted to optimise performance in a particular deployment scenario.

5.4.1.2 1,28 Mcps TDD Option

The channel spacing is 1.6MHz, but this can be adjusted to optimise performance in a particular deployment scenario.

5.4.1.3 7.68 Mcps TDD Option

The nominal channel spacing is 10 MHz, but this can be adjusted to optimise performance in a particular deployment scenario.

5.4.2 Channel raster

The channel raster is 200 kHz for all bands, which means that the carrier frequency must be a multiple of 200 kHz.

5.4.2.1 3.84 Mcps TDD Option

In addition a number of additional centre frequencies are specified according to table 5.1, which means that the centre frequencies for these channels are shifted 100 kHz relative to the general raster.

5.4.2.2 7.68 Mcps TDD Option

In addition a number of additional centre frequencies are specified according to table 5.1, which means that the centre frequencies for these channels are shifted 100 kHz relative to the general raster.

5.4.3 Channel number

The carrier frequency is designated by the UTRA absolute radio frequency channel number (UARFCN). The value of the UARFCN in the IMT2000 band is defined in the general case as follows:

$$N_t = 5 * F \qquad 0.0 \leq F \leq 3276.6 \text{ MHz}$$

where F is the carrier frequency in MHz.

Additional channels applicable to operation in the frequency band defined in sub-clause 5.2(d) for 3.84 Mcps are defined via the following UARFCN definition:

$$N_t = 5 * (F - 2150.1 \text{ MHz}) \qquad 2572.5 \text{ MHz} \leq F \leq 2617.5 \text{ MHz}$$

The 10 additional UARFCN for operations in frequency band defined in sub-clause 5.2(d) for 3.84 Mcps are hence: 2112, 2137, 2162, 2187, 2212, 2237, 2262, 2287, 2312, 2337.

6 Transmitter characteristics

6.1 General

Unless otherwise stated, the requirements in clause 6 are expressed for a single transmitter antenna connector. In case of multi-carrier transmission with multiple transmitter antenna connectors or MIMO transmission, the requirements apply for each transmitter antenna connector.

A BS supporting MC-HSDPA transmits multiple carriers simultaneously on adjacent carrier frequencies.Unless otherwise stated the transmitter characteristics are specified at the antenna connector (test port A) with a full complement of transceivers for the configuration in normal operating conditions. If any external apparatus such as a TX amplifier, a filter or the combination of such devices is used, requirements apply at the far end antenna connector (port B).

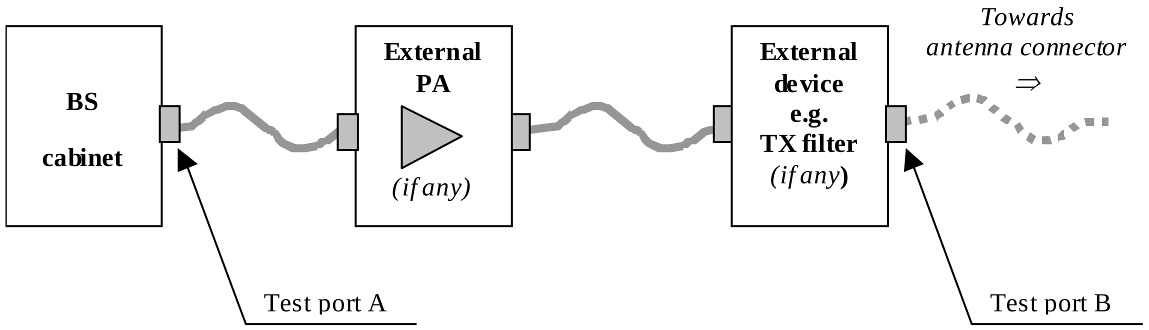

Figure 6.0: Transmitter test ports

6.2 Base station output power

The rated output power of the base station is defined in section 3.1.

The rated output power, PRAT, of the Home BS shall be as specified in Table 6.0.0.

Table 6.0.0: Home BS rated output power

Home BS class	PRAT
Home BS type 1	≤ + 20 dBm
Home BS type 2	≤ + 13 dBm

6.2.1 Base station maximum output power

The maximum output power of the base station is defined in section 3.1.

6.2.1.1 Minimum Requirement

In normal conditions, the base station maximum output power shall remain within +2 dB and -2 dB of the manufacturer''s rated output power.

In extreme conditions, the Base station maximum output power shall remain within +2.5 dB and -2.5 dB of the manufacturer''s rated output power.

In certain regions, the minimum requirement for normal conditions may apply also for some conditions outside the range of conditions defined as normal.

6.3 Frequency stability

Frequency stability is ability of the BS to transmit at the assigned carrier frequency. The BS shall use the same frequency source for both RF frequency generation and the chip clock.

6.3.1 Minimum Requirement

6.3.1.1 3,84 Mcps TDD Option

The modulated carrier frequencyis observed over a period of one timeslot for RF frequency generation. The frequency error shall be within the accuracy range given in Table 6.0.

Table 6.0: Frequency error minimum requirement

BS class	Accuracy
Wide Area BS	±0.05 ppm
Local Area BS	±0.1 ppm

6.3.1.2 1,28 Mcps TDD Option

The modulated carrier frequency isobserved over a period of one timeslot for RF frequency generation. The frequency error shall be within the accuracy range given in Table 6.0A.

Table 6.0A: Frequency error minimum requirement

BS class	Accuracy
Wide Area BS	±0.05 ppm
Local Area BS	±0.1 ppm
Home BS	±0.25 ppm

6.3.1.3 7,68 Mcps TDD Option

The modulated carrier frequencyis observed over a period of one timeslot for RF frequency generation. The frequency error shall be within the accuracy range given in Table 6.0B.

Table 6.0B: Frequency error minimum requirement

BS class	Accuracy
Wide Area BS	±0.05 ppm
Local Area BS	±0.1 ppm

6.4 Output power dynamics

For the case of MBSFN-only operation, this subclause shall not be applicable.

Power control is used to limit the interference level. The transmitter uses a quality-based power control on the downlink.

6.4.1 Inner loop power control

Inner loop power control is the ability of the BS transmitter to adjust its code domain power in response to the UL received signal.

For inner loop correction on the Downlink Channel, the base station adjusts the code domain power of a power controlled CCTrCH in response to each valid power control bit received from the UE on the Uplink Traffic Channel based on the mapping of the TPC bits in uplink CCTrCH to downlink CCTrCH. Inner loop control is based on SIR measurements at the UE receiver and the corresponding TPC commands are generated by the UE.

6.4.2 Power control steps

The power control step is the step change in the DL code domain power in response to a TPC message from the UE.

6.4.2.1 Minimum Requirement

Down link (DL) power steps: 1, 2, 3 dB

The tolerance of the code domain power and the greatest average rate of change in code domain power due to the power control step shall be within the range shown in Table 6.1.

Table 6.1: power control step size tolerance

Step size	**Tolerance**	**Range of average rate of change in code domain power per 10 steps**	
		minimum	**maximum**
1dB	+/-0.5dB	+/-8dB	+/-12dB
2dB	+/-0.75dB	+/-16dB	+/-24dB
3dB	+/-1dB	+/-24dB	+/-36dB

6.4.3 Power control dynamic range

The power control dynamic range is the difference between the maximum and the minimum code domain power of one power controlled code channel for a specified reference condition

6.4.3.1 Minimum Requirement

Down link (DL) power control dynamic range shall be greater or equal to 30 dB

6.4.4 Minimum output power

The minimum controlled output power of the BS is when the power is set to a minimum value.

6.4.4.1 Minimum Requirement

Down link (DL) minimum output power shall be lower than or equal to:

Maximum output power - 30dB

6.4.5 Primary CCPCH power

Primary CCPCH power is the code domain power of the primary common control physical channel averaged over the transmit timeslot. Primary CCPCH power is signalled over the BCH.

The error between the BCH-broadcast value of the Primary CCPCH power and the Primary CCPCH power averaged over the timeslot shall not exceed the values in table 6.2. The error is a function of the output power averaged over the timeslot, Pout, and the manufacturer"s rated output power, PRAT.

Table 6.2: Errors between Primary CCPCH power and the broadcast value

Output power in slot, dB	PCCPCH power tolerance
PRAT-3 < Pout ≤ PRAT+2	+/- 2.5 dB
PRAT-6 < Pout ≤ PRAT-3	+/- 3.5 dB
PRAT-13 < Pout ≤ PRAT-6	+/- 5 dB

6.4.6 Differential accuracy of Primary CCPCH power

The differential accuracy of the Primary CCPCH power is the relative transmitted power accuracy of PCCPCH in consecutive frames when the nominal PCCPCH power is not changed.

6.4.6.1 Minimum Requirement for Differential accuracy of PCCPCH power

Differential accuracy of PCCPCH power: +/- 0.5 dB

6.5 Transmit ON/OFF power

For the case of MBSFN-only operation, this subclause shall not be applicable.

6.5.1 Transmit OFF power

Transmit OFF power is defined as the RRC filtered mean power measured over one chip when the transmitter is off.

6.5.1.1 Minimum Requirement

6.5.1.1.1 3,84 Mcps TDD Option

The transmit OFF power shall be less than -79 dBm.

6.5.1.1.2 1,28 Mcps TDD Option

The requirement of transmit OFF power shall be less than -82 dBm.

For BS capable of multi-band operation, the requirement is only applicable during the transmitter OFF period in all supported operating bands.

6.5.1.1.3 7,68 Mcps TDD Option

The transmit OFF power shall be less than -76 dBm.

6.5.2 Transmit ON/OFF Time mask

The time mask transmit ON/OFF defines the ramping time allowed for the BS between transmit OFF power and transmit ON power.

6.5.2.1 Minimum Requirement

6.5.2.1.1 3,84 Mcps TDD Option

The transmit power level versus time should meet the mask specified in figure 6.1.

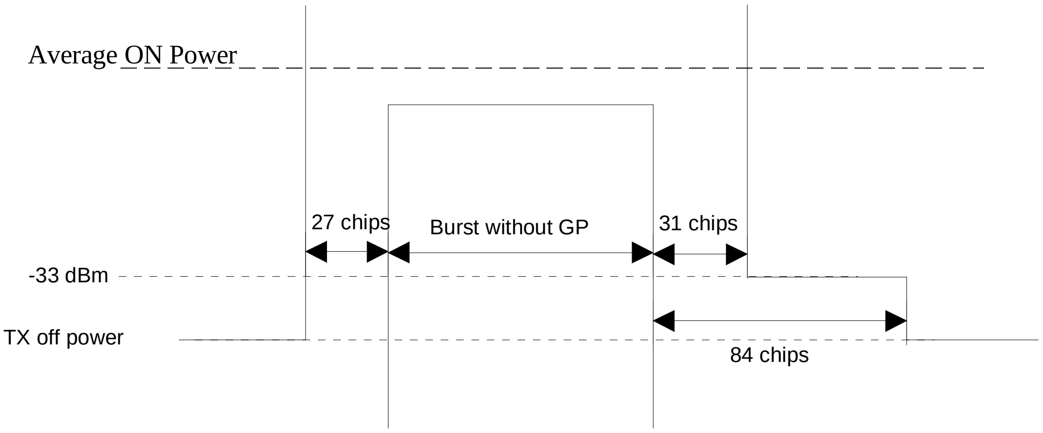
Average ON Power
27 chips
Burst without GP
31 chips
-33 dBm
TX off power
84 chips

Figure 6.1: Transmit ON/OFF template

6.5.2.1.2 1,28 Mcps TDD Option

The transmit power level versus time should meet the mask specified in figure6.1A.

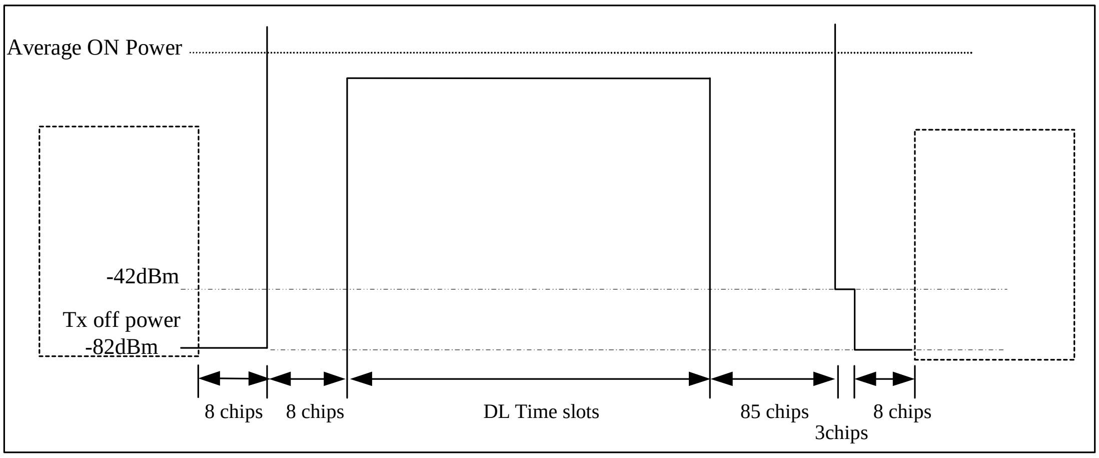
Average ON Power
-42dBm
Tx off power
-82dBm
8 chips
8 chips
DL Time slots
85 chips
3chips
8 chips

Figure 6.1A: Transmit ON/OFF template

6.5.2.1.3 7,68 Mcps TDD Option

The transmit power level versus time should meet the mask specified in figure 6.1B.

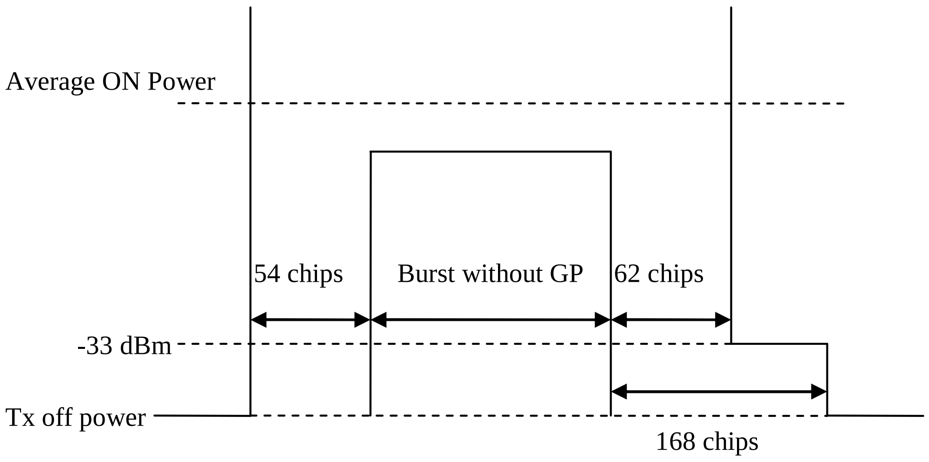

Figure 6.1B: Transmit ON/OFF template

6.6 Output RF spectrum emissions

6.6.1 Occupied bandwidth

6.6.1.1 3,84 Mcps TDD Option

Occupied bandwidth is a measure of the bandwidth containing 99% of the total integrated power for transmitted spectrum and is centered on the assigned channel frequency. The occupied channel bandwidth is less than 5 MHz based on a chip rate of 3.84 Mcps.

6.6.1.2 1,28 Mcps TDD Option

Occupied bandwidth is a measure of the bandwidth containing 99% of the total integrated power for transmitted spectrum and is centered on the assigned channel frequency. The occupied channel bandwidth is about 1.6 MHz based on a chip rate of 1.28 Mcps.

6.6.1.3 7,68 Mcps TDD Option

Occupied bandwidth is a measure of the bandwidth containing 99% of the total integrated power for transmitted spectrum and is centered on the assigned channel frequency. The occupied channel bandwidth is less than 10 MHz based on a chip rate of 7.68 Mcps.

6.6.2 Out of band emission

Out of band emissions are unwanted emissions immediately outside the channel bandwidth resulting from the modulation process and non-linearity in the transmitter but excluding spurious emissions. This out of band emission requirement is specified both in terms of a spectrum emission mask and adjacent channel power ratio for the transmitter.

6.6.2.1 Spectrum emission mask

6.6.2.1.1 3,84 Mcps TDD Option

The mask defined in Table 6.3 to 6.6 below may be mandatory in certain regions. In other regions this mask may not be applied.

For regions where this clause applies, the requirement shall be met by a base station transmitting on a single RF carrier configured in accordance with the manufacturer"s specification. Emissions shall not exceed the maximum level specified in tables 6.3 to 6.6 for the appropriate BS maximum output power, in the frequency range from Δf = 2.5 MHz to Δf_{max} from the carrier frequency, where:

- Δf is the separation between the carrier frequency and the nominal -3dB point of the measuring filter closest to the carrier frequency.

- f_offset is the separation between the carrier frequency and the center frequency of the measuring filter.- f_offset$_{max}$ is either 12.5 MHz or the offset to the UMTS Tx band edge as defined in section 5.2, whichever is the greater.

- Δf_{max} is equal to f_offset$_{max}$ minus half of the bandwidth of the mesurement filter.

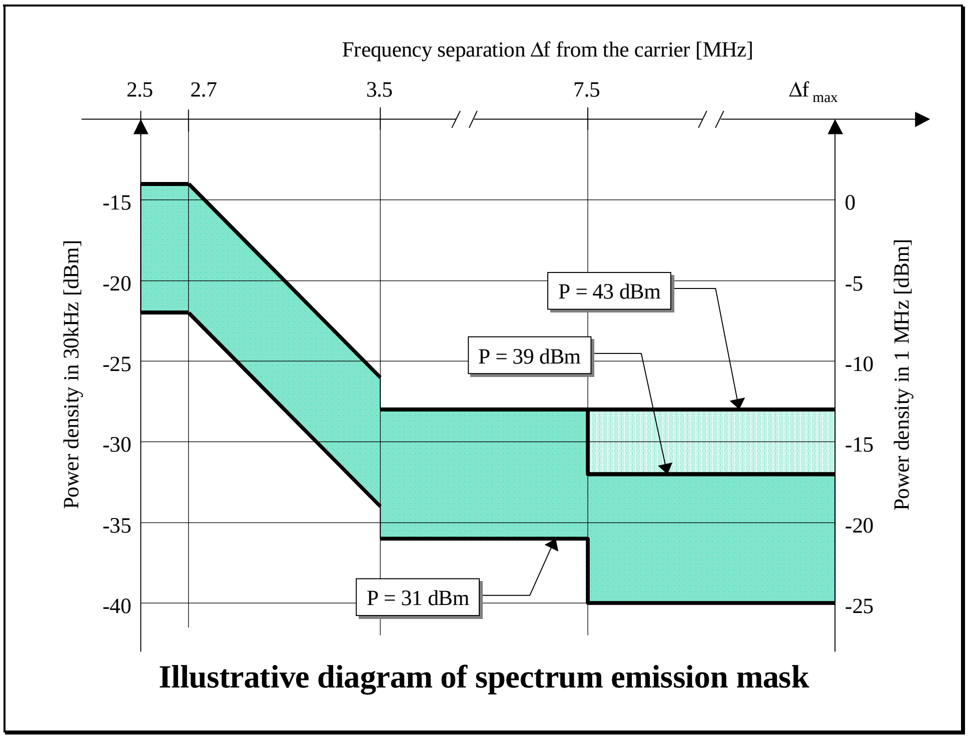

Illustrative diagram of spectrum emission mask

Figure 6.2

Table 6.3: Spectrum emission mask values, BS maximum output power P ≥ 43 dBm

Frequency offset of measurement filter -3dB point, Δf	**Frequency offset of measurement filter centre frequency, f_offset**	**Maximum level**	**Measurement bandwidth**
2.5 MHz ≤ Δf < 2.7 MHz	2.515MHz ≤ f_offset < 2.715MHz	-14 dBm	30 kHz
2.7 MHz ≤ Δf < 3.5 MHz	2.715MHz ≤ f_offset < 3.515MHz	$-14dBm - 15\cdot\left(\frac{f\_offset}{MHz} - 2.715\right)dB$	30 kHz
(see note)	3.515MHz ≤ f_offset < 4.0MHz	-26 dBm	30 kHz
3.5 MHz ≤ Δf ≤ Δf_{ma}	4.0MHz ≤ f_offset < f_offset$_{max}$	-13 dBm	1 MHz

Table 6.4: Spectrum emission mask values, BS maximum output power 39 ≤ P < 43 dBm

Frequency offset of measurement filter -3dB point, Δf	Frequency offset of measurement filter centre frequency, f_offset	Maximum level	Measurement bandwidth
2.5 MHz ≤ Δf < 2.7 MHz	2.515MHz ≤ f_offset < 2.715MHz	-14 dBm	30 kHz
2.7 MHz ≤ Δf < 3.5 MHz	2.715MHz ≤ f_offset < 3.515MHz	$-14dBm-15\cdot\left(\frac{f\_offset}{MHz}-2.715\right)dB$	30 kHz
(see note)	3.515MHz ≤ f_offset < 4.0MHz	-26 dBm	30 kHz
3.5 MHz ≤ Δf < 7.5 MHz	4.0MHz ≤ f_offset < 8.0MHz	-13 dBm	1 MHz
7.5 MHz ≤ Δf ≤ Δf_{max}	8.0MHz ≤ f_offset < f_offset_{max}	P - 56 dB	1 MHz

Table 6.5: Spectrum emission mask values, BS maximum output power 31 ≤ P < 39 dBm

Frequency offset of measurement filter -3dB point,Δf	Frequency offset of measurement filter centre frequency, f_offset	Maximum level	Measurement bandwidth
2.5 MHz ≤ Δf < 2.7 MHz	2.515MHz ≤ f_offset < 2.715MHz	P - 53 dB	30 kHz
2.7 MHz ≤ Δf < 3.5 MHz	2.715MHz ≤ f_offset < 3.515MHz	$P-53dB-15\cdot\left(\frac{f\_offset}{MHz}-2.715\right)dB$	30 kHz
(see note)	3.515MHz ≤ f_offset < 4.0MHz	P - 65 dB	30 kHz
3.5 MHz ≤ Δf < 7.5 MHz	4.0MHz ≤ f_offset < 8.0MHz	P - 52 dB	1 MHz
7.5 MHz ≤ Δf ≤ Δf_{max}	8.0MHz ≤ f_offset < f_offset_{max}	P - 56 dB	1 MHz

Table 6.6: Spectrum emission mask values, BS maximum output power P < 31 dBm

Frequency offset of measurement filter -3dB point, Δf	Frequency offset of measurement filter centre frequency, f_offset	Maximum level	Measurement bandwidth
2.5 MHz ≤ Δf < 2.7 MHz	2.515MHz ≤ f_offset < 2.715MHz	-22 dBm	30 kHz
2.7 MHz ≤ Δf < 3.5 MHz	2.715MHz ≤ f_offset < 3.515MHz	$-22dBm-15\cdot\left(\frac{f\_offset}{MHz}-2.715\right)dB$	30 kHz
(see note)	3.515MHz ≤ f_offset < 4.0MHz	-34 dBm	30 kHz
3.5 MHz ≤ Δf < 7.5 MHz	4.0MHz ≤ f_offset < 8.0MHz	-21 dBm	1 MHz
7.5 MHz ≤ Δf ≤ Δf_{max}	8.0MHz ≤ f_offset < f_offset_{max}	-25 dBm	1 MHz

NOTE: This frequency range ensures that the range of values of f_offset is continuous.

6.6.2.1.2 1,28 Mcps TDD Option

The mask defined in Table 6.3A to 6.5A may be mandatory in certain regions. In other regions this mask may not be applied.

For regions where this clause applies, the requirement shall be met by a base station transmitting on a single RF carrier configured in accordance with the manufacturer"s specification. Emissions shall not exceed the maximum level specified in table 6.3A to 6.5A for the appropriate BS maximum output power, in the frequency range from Δf = 0.8 MHz to Δf_{max} from the carrier frequency, where:

- Δf is the separation between the carrier frequency and the nominal -3dB point of the measuring filter closest to the carrier frequency.
- f_offset is the separation between the carrier frequency and the center frequency of the measuring filter.- f_offset$_{max}$ is either 4 MHz or the offset to the UMTS Tx band edge as defined in section 5.2, whichever is the greater.
- Δf $_{max}$ is equal to f_offset$_{max}$ minus half of the bandwidth of the mesurement filter. Inside any inter RF bandwidth gaps with W_{gap} < 8 MHz for BS operating in multiple bands, emissions shall not exceed the cumulative sum of the minimum requirements specified at the RF bandwidth edges on each side of the inter RF bandwidth gap. The minimum requirement for RF bandwidth edge is specified in Tables 6.3A to 6.5A below, where in this case.
- Δf equal to 0.8MHz plus the separation between the RF bandwidth edge frequency and the nominal -3dB point of the measuring filter closest to the RF bandwidth edge.
- f_offset is equal to 0.8MHz plus the separation between the RF bandwith edge frequency and the center frequency of the measuring filter.
- f_offset$_{max}$ is either 4 MHz or the offset to the UMTS Tx band edge as defined in section 5.2, whichever is the greater.
- Δf max is equal to f_offsetmax minus half of the bandwidth of the mesurement filter.

For a multi-carrier BS, the definitions above apply to the lower edge of the carrier transmitted at the lowest carrier frequency and the upper edge of the carrier transmitted at the highest carrier frequency within a specified frequency.

For BS capable of multi-band operation where multiple bands are mapped on separate antenna connectors, the single-band requirements apply and the cumulative evaluation of the emission limit in the inter-RF bandwidth gap are not applicable.

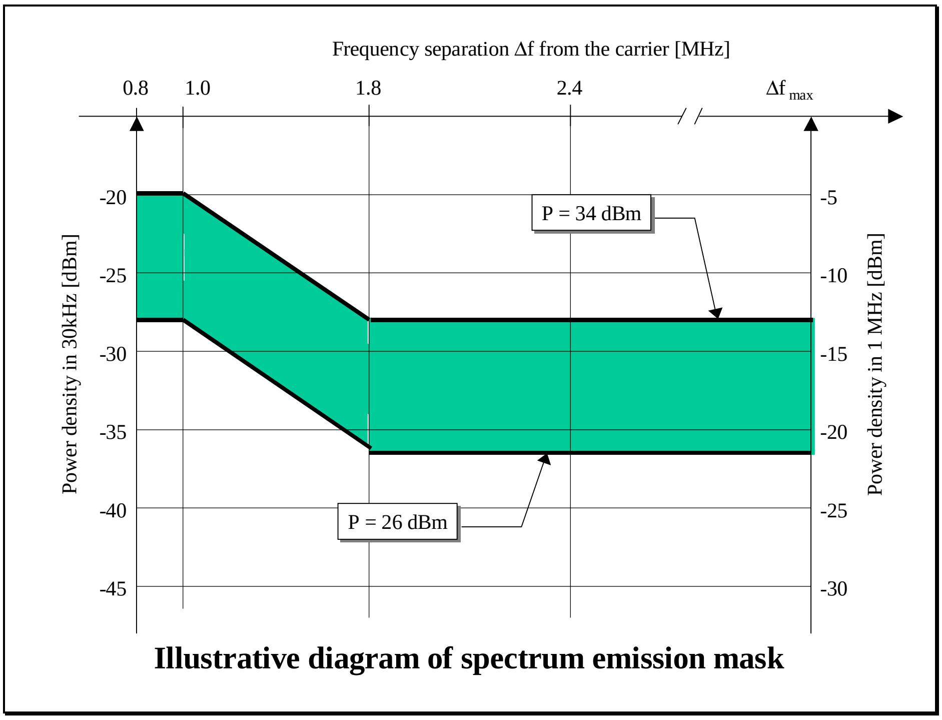

Figure 6.2A

Table 6.3A: Spectrum emission mask values, BS maximum output power P ≥ 34 dBm

Frequency offset of measurement filter -3dB point, Δf	Frequency offset of measurement filter centre frequency, f_offset	Maximum level	Measurement bandwidth
0.8 MHz ≤ Δf < 1.0 MHz	0.815MHz ≤ f_offset < 1.015MHz	-20 dBm	30 kHz
1.0 MHz ≤ Δf < 1.8 MHz	1.015MHz ≤ f_offset < 1.815MHz	$-20dBm-10\cdot\left(\frac{f\_offset}{MHz}-1{,}015\right)dB$	30 kHz
See note	1.815MHz ≤ f_offset < 2.3MHz	-28 dBm	30 kHz
1.8 MHz ≤ Δf ≤Δf_{max}	2.3MHz ≤ f_offset < f_offset_{max}	-13 dBm	1 MHz
NOTE 1: For BS capable of multi-band operation with inter RF bandwidth gap less than 8MHz, the minimum requirement within the inter RF bandwidth gap is calculated as a cumulative sum of emissions from the two carriers on each side of the inter RF bandwidth gap.			

Table 6.4A: Spectrum emission mask values, BS maximum output power 26 ≤ P < 34 dBm

Frequency offset of measurement filter -3dB point, Δf	Frequency offset of measurement filter centre frequency, f_offset	Maximum level	Measurement bandwidth
0.8 MHz ≤ Δf < 1.0 MHz	0.815MHz ≤ f_offset < 1.015MHz	P-54 dB	30 kHz
1.0 MHz ≤ Δf < 1.8 MHz	1.015MHz ≤ f_offset < 1.815MHz	$P-54dB-10\cdot\left(\frac{f\_offset}{MHz}-1{,}015\right)dB$	30 kHz
See note	1.815 MHz ≤ f_offset < 2.3 MHz	P-62 dB	30 kHz
1.8 MHz ≤ Δf ≤Δf_{max}	2.3 MHz ≤ f_offset < f_offset_{max}	P - 47 dB	1 MHz
NOTE 1: For BS capable of multi-band operation with inter RF bandwidth gap less than 8MHz, the minimum requirement within the inter RF bandwidth gap is calculated as a cumulative sum of emissions from the two carriers on each side of the inter RF bandwidth gap.			

Table 6.5A: Spectrum emission mask values, BS maximum output power P < 26 dBm

Frequency offset of measurement filter -3dB point, Δf	Frequency offset of measurement filter centre frequency, f_offset	Maximum level	Measurement bandwidth
0.8 MHz≤ Δf < 1.0 MHz	0.815MHz ≤ f_offset < 1.015MHz	-28 dBm	30 kHz
1.0 MHz≤ Δf < 1.8 MHz	1.015MHz ≤ f_offset < 1.815MHz	$-28dBm-10\cdot\left(\frac{f\_offset}{MHz}-1{,}015\right)dB$	30 kHz
See note	1.815MHz ≤ f_offset < 2.3MHz	-36 dBm	30 kHz
1.8 MHz≤ Δf ≤Δf_{max}	2.3MHz ≤ f_offset < f_offset_{max}	-21 dBm	1 MHz
NOTE 1: For BS capable of multi-band operation with inter RF bandwidth gap less than 8MHz, the minimum requirement within the inter RF bandwidth gap is calculated as a cumulative sum of emissions from the two carriers on each side of the inter RF bandwidth gap.			

NOTE: This frequency range ensures that the range of values of f_offset is continuous.

6.6.2.1.3 7,68 Mcps TDD Option

The mask defined in Table 6.3B to 6.6B below may be mandatory in certain regions. In other regions this mask may not be applied.

For regions where this clause applies, the requirement shall be met by a base station transmitting on a single RF carrier configured in accordance with the manufacturer"s specification. Emissions shall not exceed the maximum level specified in tables 6.3B to 6.6B for the appropriate BS maximum output power, in the frequency range from Δf = 5 MHz to Δf $_{max}$ from the carrier frequency, where:

- Δf is the separation between the carrier frequency and the nominal -3dB point of the measuring filter closest to the carrier frequency.
- f_offset is the separation between the carrier frequency and the center frequency of the measuring filter.- f_offset$_{max}$ is either 25 MHz or the offset to the UMTS Tx band edge as defined in section 5.2, whichever is the greater.
- Δf $_{max}$ is equal to f_offset$_{max}$ minus half of the bandwidth of the measurement filter.

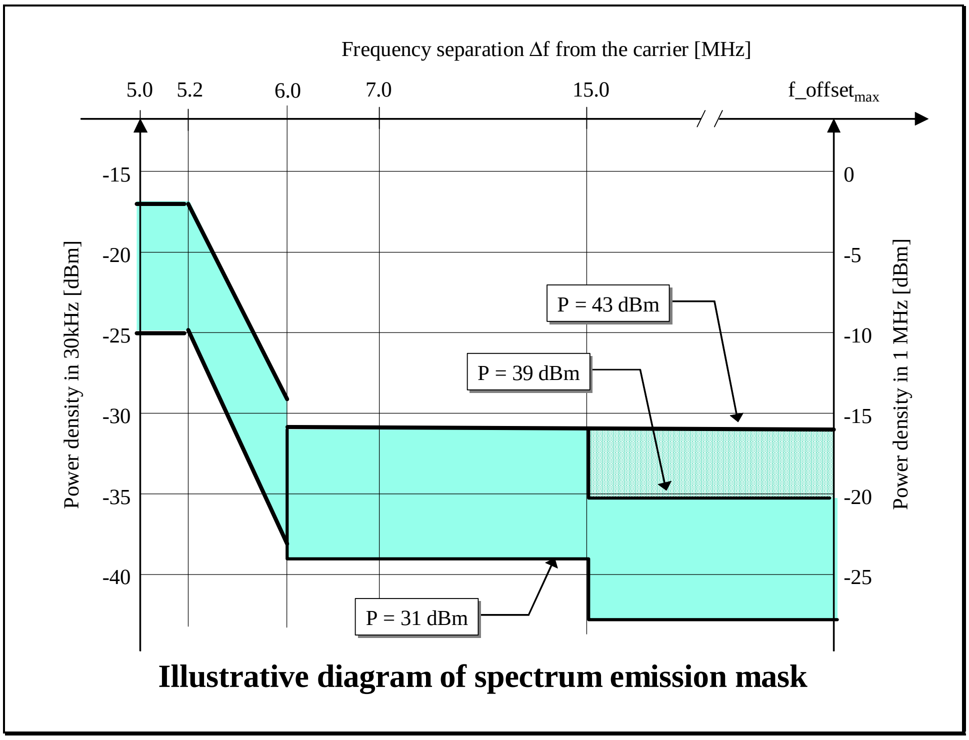

Figure 6.2B: Spectrum emission mask

Table 6.3B: Spectrum emission mask values, BS maximum output power P ≥ 43 dBm

Frequency offset of measurement filter -3dB point, Δf	Frequency offset of measurement filter centre frequency, f_offset	Maximum level	Measurement bandwidth
5 MHz ≤ Δf < 5.2 MHz	5.015MHz ≤ f_offset < 5.215MHz	-17 dBm	30 kHz
5.2 MHz ≤ Δf < 6 MHz	5.215MHz ≤ f_offset < 6.015MHz	$-17dBm-15\cdot\left(\frac{f\_offset}{MHz}-5.215\right)dB$	30 kHz
(see note)	6.015MHz ≤ f_offset < 6.5MHz	-29 dBm	30 kHz
6 MHz ≤ Δf ≤ Δf$_{max}$	6.5MHz ≤ f_offset < f_offset$_{max}$	-16 dBm	1 MHz

Table 6.4B: Spectrum emission mask values, BS maximum output power 39 ≤ P < 43 dBm

Frequency offset of measurement filter -3dB point, Δf	Frequency offset of measurement filter centre frequency, f_offset	Maximum level	Measurement bandwidth
5 MHz ≤ Δf < 5.2 MHz	5.015MHz ≤ f_offset < 5.215MHz	-17 dBm	30 kHz
5.2 MHz ≤ Δf < 6 MHz	5.215MHz ≤ f_offset < 6.015MHz	$-17dBm-15\cdot\left(\frac{f\_offset}{MHz}-5.215\right)dB$	30 kHz
(see note)	6.015MHz ≤ f_offset < 6.5MHz	-29 dBm	30 kHz
6 MHz ≤ Δf < 15 MHz	6.5MHz ≤ f_offset < 15.5MHz	-16 dBm	1 MHz
15 MHz ≤ Δf ≤ Δf_{max}	15.5MHz ≤ f_offset < f_offset_{max}	P - 59 dB	1 MHz

Table 6.5B: Spectrum emission mask values, BS maximum output power 31 ≤ P < 39 dBm

Frequency offset of measurement filter -3dB point,Δf	Frequency offset of measurement filter centre frequency, f_offset	Maximum level	Measurement bandwidth
5 MHz ≤ Δf < 5.2 MHz	5.015MHz ≤ f_offset < 5.215MHz	P - 56 dB	30 kHz
5.2 MHz ≤ Δf < 6 MHz	5.215MHz ≤ f_offset < 6.015MHz	$P-56dB-15\cdot\left(\frac{f\_offset}{MHz}-5.215\right)dB$	30 kHz
(see note)	6.015MHz ≤ f_offset < 6.5MHz	P - 68 dB	30 kHz
6 MHz ≤ Δf < 15 MHz	6.5MHz ≤ f_offset < 15.5MHz	P - 55 dB	1 MHz
15 MHz ≤ Δf ≤ Δf_{max}	15.5MHz ≤ f_offset < f_offset_{max}	P - 59 dB	1 MHz

Table 6.6B: Spectrum emission mask values, BS maximum output power P < 31 dBm

Frequency offset of measurement filter -3dB point, Δf	Frequency offset of measurement filter centre frequency, f_offset	Maximum level	Measurement bandwidth
5 MHz ≤ Δf < 5.2 MHz	5.015MHz ≤ f_offset < 5.215MHz	-25 dBm	30 kHz
5.2 MHz ≤ Δf < 6 MHz	5.215MHz ≤ f_offset < 6.015MHz	$-25dBm-15\cdot\left(\frac{f\_offset}{MHz}-5.215\right)dB$	30 kHz
(see note)	6.015MHz ≤ f_offset < 6.5MHz	-37 dBm	30 kHz
6 MHz ≤ Δf < 15 MHz	6.5MHz ≤ f_offset < 15.5MHz	-24 dBm	1 MHz
15 MHz ≤ Δf ≤ Δf_{max}	15.5MHz ≤ f_offset < f_offset_{max}	-28 dBm	1 MHz

NOTE: This frequency range ensures that the range of values of f_offset is continuous.

6.6.2.2 Adjacent Channel Leakage power Ratio (ACLR)

Adjacent Channel Leakage power Ratio (ACLR) is the ratio of the RRC filtered mean power centered on the assigned channel frequency to the RRC filtered mean power centered on an adjacent channel frequency. The requirements shall apply for all configurations of BS (single carrier or multi-carrier), and for all operating modes foreseen by the manufacturer''s specification.

In some cases the requirement is expressed as adjacent channel leakage power, which is the RRC filtered mean power for the given bandwidth of the victim system at the defined adjacent channel offset.

The requirement depends on the deployment scenario. Three different deployment scenarios have been defined as given below.

6.6.2.2.1 Minimum Requirement

6.6.2.2.1.1 3,84 Mcps TDD Option

The ACLR of a single carrier BS or a multi-carrier BS with contiguous carrier frequencies shall be higher than the value specified in Table 6.7.

Table 6.7: BS ACLR

BS adjacent channel offset below the first or above the last carrier frequency used	ACLR limit
5 MHz	45 dB
10 MHz	55 dB

If a BS provides multiple non-contiguous single carriers or multiple non-contiguous groups of contiguous single carriers, the above requirements shall be applied individually to the single carriers or group of single carriers.

6.6.2.2.1.2 1,28 Mcps TDD Option

For the 1.28Mcps chip rate option, the ACLR of a single carrier BS or a multi-carrier BS with contiguous carrier frequencies shall be better than the value specified in Table 6.7A

Table 6.7A: BS ACLR (1.28Mcps chip rate)

BS adjacent channel offset below the first or above the last carrier frequency used	ACLR limit
1.6 MHz	40 dB
3.2 MHz	45 dB

If a BS provides multiple non-contiguous single carriers or multiple non-contiguous groups of contiguous single carriers, the above requirements shall be applied individually to the single carriers or group of single carriers.

In addition, for BS operating in multiple bands, where multiple bands are mapped on the same antenna connector, the ACLR requirement for the first adjacent channel applies inside any inter RF bandwidth gap with a gap size larger than 4.8MHz. The ACLR requirement for the second adjacent channel applies inside any inter RF bandwidth gap with a gap size larger than 6.4MHz.

6.6.2.2.1.3 7,68 Mcps TDD Option

The ACLR of a single carrier BS or a multi-carrier BS with contiguous carrier frequencies shall be higher than the value specified in Table 6.7B.

Table 6.7B: BS ACLR

BS adjacent channel offset below the first or above the last carrier frequency used	Chip Rate for RRC Measurement Filter	ACLR limit
7.5 MHz	3.84 Mcps	45 dB
12.5 MHz	3.84 Mcps	55 dB
10.0 MHz	7.68 Mcps	45 dB
20.0 MHz	7.68 Mcps	55 dB

If a BS provides multiple non-contiguous single carriers or multiple non-contiguous groups of contiguous single carriers, the above requirements shall be applied individually to the single carriers or group of single carriers.

6.6.2.2.2 Void

6.6.2.2.2.1 Void

6.6.2.2.2.1.1 Void

6.6.2.2.2.1.2 Void

6.6.2.2.2.2 Void

6.6.2.2.2.2.1 Void

6.6.2.2.2.2.2 Void

6.6.2.2.2.3 Void

6.6.2.2.2.3.1 Void

6.6.2.2.3 Void

6.6.2.2.3.1 Void

6.6.2.2.3.1.1 Void

6.6.2.2.3.2 Void

6.6.2.2.3.2.1 Void

6.6.2.2.3.2.2 Void

6.6.2.2.3.3 Void

6.6.2.2.3.3.1 Void

6.6.2.2.3.3.2 Void

6.6.3 Spurious emissions

Spurious emissions are emissions which are caused by unwanted transmitter effects such as harmonics emission, parasitic emission, intermodulation products and frequency conversion products, but exclude out of band emissions. This is measured at the base station antenna connector.

The requirements shall apply whatever the type of transmitter considered (single carrier or multi carrier). It applies for all transmission modes foreseen by the manufacturer"s.

For 3.84 Mcps TDD option, either requirement (except 6.6.3.6) applies at frequencies within the specified frequency ranges which are more than 12.5 MHz under the first carrier frequency used or more than 12.5 MHz above the last carrier frequency used.

For 1.28 Mcps TDD option, the mandatory spurious emission requirement in subclause 6.6.3.1 applies from 9kHz to 12.75GHz, excluding the frequency range from 4 MHz below the lowest frequency of each operating band to 4 MHz above the highest frequency of each operating band. For BS capable of multi-band operation, where multiple bands are mapped on the same antenna connector, this exclusion applies for all supported operating bands. For BS capable of multi-band operation where multiple bands are mapped on separate antenna connectors, the single-band requirements apply and the multi-band exclusions and provisions are not applicable.

For 7.68 Mcps TDD option, either requirement (except 6.6.3.6) applies at frequencies within the specified frequency ranges which are more than 25 MHz under the first carrier frequency used or more than 25 MHz above the last carrier frequency used.

Unless otherwise stated, all requirements are measured as mean power.

6.6.3.1 Mandatory Requirements

The requirements of either subclause 6.6.3.1.1 or subclause 6.6.3.1.2 shall apply.

6.6.3.1.1 Spurious emissions (Category A)

The following requirements shall be met in cases where Category A limits for spurious emissions, as defined in ITU-R Recommendation SM.329-9 [1], are applied.

6.6.3.1.1.1 Minimum Requirement

6.6.3.1.1.1.1 3,84 Mcps TDD Option

The power of any spurious emission shall not exceed:

Table 6.10: BS Mandatory spurious emissions limits, Category A

Band	Minimum requirement	Measurement Bandwidth	Notes
9kHz - 150kHz	-13 dBm	1 kHz	Note 1
150kHz - 30MHz		10 kHz	Note 1
30MHz - 1GHz		100 kHz	Note 1
1GHz - 12.75 GHz		1 MHz	Note 2
NOTE 1: Bandwidth as in ITU SM.329 [1], s4.1 NOTE 2: Upper frequency as in ITU SM.329 [1], s2.5 table 1			

6.6.3.1.1.1.2 1,28 Mcps TDD Option

The power of any spurious emission shall not exceed:

Table 6.10A: BS Mandatory spurious emissions limits, Category A

Band	Minimum requirement	Measurement Bandwidth	Notes
9kHz - 150kHz	-13 dBm	1 kHz	Note 1
150kHz - 30MHz		10 kHz	Note 1
30MHz - 1GHz		100 kHz	Note 1
1GHz - 12.75 GHz		1 MHz	Note 2
NOTE 1: Bandwidth as in ITU SM.329 [1], s4.1 NOTE 2: Upper frequency as in ITU SM.329 [1], s2.5 table 1			

NOTE: only the measurement bands are different according to the occupied bandwidth.

6.6.3.1.1.1.3 7,68 Mcps TDD Option

The power of any spurious emission shall not exceed:

Table 6.10B: BS Mandatory spurious emissions limits, Category A

Band	Minimum requirement	Measurement Bandwidth	Notes
9kHz - 150kHz	-13 dBm	1 kHz	Note 1
150kHz - 30MHz		10 kHz	Note 1
30MHz - 1GHz		100 kHz	Note 1
1GHz - 12.75 GHz		1 MHz	Note 2
NOTE 1: Bandwidth as in ITU SM.329 [1], s4.1 NOTE 2: Upper frequency as in ITU SM.329 [1], s2.5 table 1			

6.6.3.1.2 Spurious emissions (Category B)

The following requirements shall be met in cases where Category B limits for spurious emissions, as defined in ITU-R Recommendation SM.329 [1], are applied.

6.6.3.1.2.1 Minimum Requirement

6.6.3.1.2.1.1 3,84 Mcps TDD Option

The power of any spurious emission shall not exceed:

Table 6.11: BS Mandatory spurious emissions limits, Category B

Band	Maximum Level	Measurement Bandwidth	Notes
9kHz - 150kHz	-36 dBm	1 kHz	Note 1
150kHz - 30MHz	- 36 dBm	10 kHz	Note 1
30MHz - 1GHz	-36 dBm	100 kHz	Note 1
1GHz ↔ Fl -10 MHz	-30 dBm	1 MHz	Note 1
Fl -10MHz ↔ Fu +10 MHz	-15 dBm	1 MHz	Note 2
Fu + 10 MHz ↔ 12,75 GHz	-30 dBm	1 MHz	Note 3
NOTE 1: Bandwidth as in ITU SM.329 [1], s4.1 NOTE 2: Limit based on ITU-R SM.329 [1], s4.3 and Annex 7 NOTE 3: Bandwidth as in ITU-R SM.329 [1], s4.3 and Annex 7. Upper frequency as in ITU-R SM.329 [1], s2.5 table 1			

Fl :	Lower frequency of the band in which TDD operates
Fu:	Upper frequency of the band in which TDD operates

6.6.3.1.2.1.2 1,28 Mcps TDD Option

The power of any spurious emission shall not exceed:

Table 6.11A: BS Mandatory spurious emissions limits, Category B

Band	Maximum Level	Measurement Bandwidth	Notes
9kHz - 150kHz	-36 dBm	1 kHz	Note 1
150kHz - 30MHz	- 36 dBm	10 kHz	Note 1
30MHz - 1GHz	-36 dBm	100 kHz	Note 1
1GHz ↔ Fl -10 MHz	-30 dBm	1 MHz	Note 1
Fl -10MHz ↔ Fu +10 MHz	-15 dBm	1 MHz	Note 2
Fu +10 MHz ↔ 12,75 GHz	-30 dBm	1 MHz	Note 3
NOTE 1: Bandwidth as in ITU SM.329 [1], s4.1 NOTE 2: Limit based on ITU-R SM.329 [1], s4.3 and Annex 7 NOTE 3: Bandwidth as in ITU-R SM.329 [1], s4.3 and Annex 7. Upper frequency as in ITU-R SM.329 [1], s2.5 table 1			

Fl: Lower frequency of the band in which TDD operates

Fu: Upper frequency of the band in which TDD operates

6.6.3.1.2.1.3 7,68 Mcps TDD Option

The power of any spurious emission shall not exceed:

Table 6.11B: BS Mandatory spurious emissions limits, Category B

Band	Maximum Level	Measurement Bandwidth	Notes
9kHz - 150kHz	-36 dBm	1 kHz	Note 1
150kHz - 30MHz	- 36 dBm	10 kHz	Note 1
30MHz - 1GHz	-36 dBm	100 kHz	Note 1
1GHz ↔ Fl -10 MHz	-30 dBm	1 MHz	Note 1
Fl -10 MHz ↔ Fu +10 MHz	-15 dBm	1 MHz	Note 2
Fu + 10 MHz ↔ 12,75 GHz	-30 dBm	1 MHz	Note 3
NOTE 1: Bandwidth as in ITU SM.329 [1], s4.1 NOTE 2: Limit based on ITU-R SM.329 [1], s4.3 and Annex 7 NOTE 3: Bandwidth as in ITU-R SM.329 [1], s4.3 and Annex 7. Upper frequency as in ITU-R SM.329 [1], s2.5 table 1			

Fl: Lower frequency of the band in which TDD operates

Fu: Upper frequency of the band in which TDD operates

6.6.3.2 Co-existence with GSM, DCS, UTRA and/or E-UTRA

6.6.3.2.1 Operation in the same geographic area

These requirements may be applied for the protection of other UE and/or BS receivers when GSM DCS, UTRA and/or E-UTRA BS are operating in other frequency bands in the same geographical area with a UTRA TDD BS.

6.6.3.2.1.1 Minimum Requirement

The power of any spurious emission shall not exceed the limits defined in Table 6.12.

For BS capable of multi-band operation, the exclusions and conditions in the Note column of Table 6.12 apply for each supported operating band. For BS capable of multi-band operation where multiple bands are mapped on separate antenna connectors, the exclusions and conditions in the Note column of Table 6.12 apply for the operating band supported at that antenna connector.

Table 6.12: BS Spurious emissions limits for UTRA TDD Wide Area BS in geographic coverage area of systems operating in other frequency bands

System type operating in the same geographical area	Band	Maximum Level	Measurement Bandwidth	Note
GSM900	876 - 915 MHz	-61 dBm	100 kHz	
	921 - 960MHz	-57 dBm	100 kHz	
DCS1800	1710 - 1785 MHz	-61 dBm	100 kHz	This requirement does not apply to UTRA TDD operating in Band b and c. or For UTRA TDD BS operating in Band f, it applies for 1710 - 1755 MHz
	1805 - 1880MHz	-47 dBm	100 kHz	This requirement does not apply to UTRA TDD operating in Band b and c. or For UTRA TDD BS operating in Band f, it applies for 1805 - 1850 MHz
GSM850 or CDMA850	824 - 849 MHz	-61 dBm	100 kHz	
	869 - 894 MHz	-57 dBm	100 kHz	
WA BS UTRA FDD Band I or E-UTRA Band 1	1920 - 1980 MHz	-43 dBm	3,84 MHz	
	2110 - 2170 MHz	-52 dBm	1 MHz	
WA BS UTRA FDD Band III or E-UTRA Band 3	1710 - 1785	-43 dBm	3,84 MHz	For UTRA TDD BS operating in Band f, it applies for 1710-1755 MHz
	1805 - 1880	-52 dBm	1 MHz	For UTRA TDD BS operating in Band f, it applies for 1805-1850 MHz
WA BS UTRA FDD Band V or E-UTRA Band 5	824 - 849 MHz	-43 dBm	3,84 MHz	
	869 - 894 MHz	-52 dBm	1 MHz	
WA BS UTRA FDD Band VII or E-UTRA Band 7	2500 - 2570 MHz	-43 dBm	3.84 MHz	
	2620 - 2690 MHz	-52 dBm	1 MHz	
WA BS UTRA FDD Band VI or XIX, E-UTRA Band 6, 18 or 19	815-850 MHz	-43 dBm	3,84 MHz	Applicable in Japan
	860-895 MHz	-52 dBm	1 MHz	Applicable in Japan
WA BS UTRA FDD Band XI or XXI or E-UTRA Band 11 or 21	1427.9MHz - 1452.9MHz	-43 dBm	3.84 MHz	Applicable in Japan
	1475.9MHz - 1500.9MHz	-52 dBm	1 MHz	Applicable in Japan
WA BS UTRA FDD Band IX or E-UTRA Band 9	1749.9-1784.9 MHz	-43 dBm	3.84 MHz	Applicable in Japan
	1844.9-1879.9 MHz	-52 dBm	1 MHz	Applicable in Japan
LA BS UTRA FDD Band I or E-UTRA Band 1	1920 - 1980 MHz	-40 dBm	3,84 MHz	
	2110 - 2170 MHz	-52 dBm	1 MHz	
LA BS UTRA FDD Band III or E-UTRA Band 3	1710 - 1785 MHz	-40 dBm	3.84 MHz	For UTRA TDD BS operating in Band f, it applies for 1710-1755 MHz
	1805 - 1880 MHz	-52 dBm	1 MHz	For UTRA TDD BS operating in Band f, it applies for 1805-1850 MHz
LA BS UTRA FDD Band V	824 - 849 MHz	-40 dBm	3.84 MHz	

or E-UTRA Band 5	869 - 894 MHz	-52 dBm	1 MHz	
LA BS UTRA FDD Band VII or E-UTRA Band 7	2500 - 2570 MHz	-40 dBm	3.84 MHz	
	2620 - 2690 MHz	-52 dBm	1 MHz	
NOTE 1: The co-existence requirements do not apply for the 10 MHz frequency range immediately outside the operating band (see section 5.2). Emission limits for this excluded frequency range may be covered by local or regional requirements. NOTE 2: The requirements for Wide Area BS for co-existence with UTRA FDD and/or E-UTRA FDD and for co-existence between unsynchronised TDD base stations are based on a coupling loss of 67dB between the TDD and FDD base stations. The scenarios leading to these requirements are addressed in TR 25.942 [8]. NOTE 3: The table above assumes that two operating bands, where the frequency ranges would be overlapping, are not deployed in the same geographical area. For such a case of operation with overlapping frequency arrangements in the same geographical area, special co-existence requirements may apply that are not covered by the 3GPP specifications.				

6.6.3.2.2 Co-located base stations

These requirements may be applied for the protection of other BS receivers when GSM, DCS, UTRA, and/or E-UTRA BS are co-located with a UTRA TDD BS.

The requirements assume a 30 dB coupling loss between transmitter and receiver and are based on co-location with base stations of the same class.

6.6.3.2.2.1 Minimum Requirement

The power of any spurious emission shall not exceed the limits defined in Table 6.13.

For BS capable of multi-band operation, the exclusions and conditions in the Note column of Table 6.13 apply for each supported operating band. For BS capable of multi-band operation where multiple bands are mapped on separate antenna connectors, the exclusions and conditions in the Note column of Table 6.13 apply for the operating band supported at that antenna connector.

Table 6.13: BS Spurious emissions limits for Wide Area BS co-located with another BS

System type operating in the same geographical area	Band	Maximum Level	Measurement Bandwidth	Note
Macro GSM900	876 - 915 MHz	-98 dBm	100 kHz	
Macro DCS1800	1710 - 1785 MHz	-98 dBm	100 kHz	This requirement does not apply to UTRA TDD operating in Band b and c. or UTRA FDD BS operating in Band f, it applies for 1710 - 1755 MHz
GSM850 or CDMA850	824 - 849 MHz	-98 dBm	100 kHz	
WA BS UTRA FDD Band I or E-UTRA Band 1	1920 - 1980 MHz	-80 dBm	3,84 MHz	
WA BS UTRA FDD Band III or E-UTRA Band 3	1710 - 1785 MHz	-80 dBm	3,84 MHz	For UTRA TDD BS operating in Band f, it applies for 1710-1755 MHz.
WA BS UTRA FDD Band V or E-UTRA Band 5	824 849 MHz	-80 dBm	3,84 MHz	
WA BS UTRA FDD Band VII or E-UTRA Band 7	2500 - 2570 MHz	- 80 dBm	3.84 MHz	

NOTE 1: The co-location requirements do not apply for the 10 MHz frequency range immediately outside the BS transmit frequency range of the operating band (see section 5.2). The current state-of-the-art technology does not allow a single generic solution for co-location with other system on adjacent frequencies for 30dB BS-BS minimum coupling loss. However, there are certain site-engineering solutions that can be used. These techniques are addressed in TR 25.942 [8].

NOTE 2: The requirements in Table 6.17 are based on a minimum coupling loss of 30 dB between base stations. The co-location of different base station classes is not considered.

NOTE 3: The table above assumes that two operating bands, where the frequency ranges would be overlapping, are not deployed in the same geographical area. For such a case of operation with overlapping frequency arrangements in the same geographical area, special co-existence requirements may apply that are not covered by the 3GPP specifications.

6.6.3.3 Void

6.6.3.3.1 Void

6.6.3.3.1.1 Void

Table 6.14: Void

Table 6.14a: Void

6.6.3.3.2 Void

6.6.3.3.2.1 Void

Table 6.15: Void

Table 6.15: Void

6.6.3.4 Void

6.6.3.4.1 Void

6.6.3.4.1.1 Void

Table 6.16: Void

6.6.3.4.2 Void

6.6.3.4.2.1 Void

Table 6.17: Void

6.6.3.5 Co-existence with unsynchronised UTRA TDD and/or E-UTRA TDD

6.6.3.5.1 Operation in the same geographic area

This requirement shall apply in case the equipment is operated in the same geographic area with unsynchronised UTRA TDD and/or E-UTRA TDD BS that comprises uplink receive functionality.

6.6.3.5.1.1 Minimum Requirement

6.6.3.5.1.1.1 3,84 Mcps TDD option

The RRC filtered mean power of any spurious emission shall not exceed the limits specified in table 6.18.

Table 6.18: BS Spurious emissions limits for operation in same geographic area with unsynchronised UTRA TDD and/or E-UTRA TDD

System type operating in the same geographic area	Frequency range	Maximum Level	Measurement Bandwidth
WA UTRA TDD Band a) or E-UTRA Band 33	1900 - 1920 MHz	-39 dBm	3,84 MHz
WA UTRA TDD Band a) or E-UTRA Band 34	2010 - 2025 MHz	-39 dBm	3,84 MHz
WA UTRA TDD Band d) or E-UTRA Band 38	2570 - 2620 MHz	-39 dBm	3,84 MHz
LA UTRA TDD Band a) or E-UTRA Band 33	1900 - 1920 MHz	-36 dBm	3,84 MHz
LA UTRA TDD Band a) or E-UTRA Band 34	2010 - 2025 MHz	-36 dBm	3,84 MHz
LA UTRA TDD Band d) or E-UTRA Band 38	2570 - 2620 MHz	-36 dBm	3,84 MHz

NOTE: The requirements in Table 6.18 for the Wide Area BS are based on a minimum coupling loss of 67 dB between unsynchronised TDD base stations. The requirements in Table 6.18 for the Local Area BS are based on a coupling loss of 70 dB between unsynchronised Wide Area and Local Area TDD base stations. The scenarios leading to these requirements are addressed in TR25.942 [4].

6.6.3.5.1.1.2 1,28 Mcps TDD option

In geographic areas where 1,28 Mcps TDD is deployed, the RRC filtered mean power of any spurious emission shall not exceed the limits specified in table 6.19. For BS capable of multi-band operation, the exclusions and conditions in the Note of Table 6.19 apply for each supported operating band. For BS capable of multi-band operation where multiple bands are mapped on separate antenna connectors, the exclusions and conditions in the Note column of Table 6.19 apply for the operating band supported at that antenna connector.

Table 6.19: BS Spurious emissions limits for operation in same geographic area with unsynchronised 1,28 Mcps UTRA TDD and/or E-UTRA TDD

System type operating in the same geographic area	Frequency range	Maximum Level	Measurement Bandwidth
WA UTRA TDD Band a) or E-UTRA Band 33	1900 - 1920 MHz	-52 dBm	1 MHz
WA UTRA TDD Band a) or E-UTRA Band 34	2010 - 2025 MHz	-52 dBm	1 MHz
WA UTRA TDD Band e) or E-UTRA Band 40	2300 - 2400 MHz	-52 dBm	1 MHz
WA UTRA TDD Band d) or E-UTRA Band 38	2570 - 2620 MHz	-52 dBm	1 MHz
WA UTRA TDD Band f) or E-UTRA Band 39	1880 – 1920 MHz	-52 dBm	1 MHz
WA E-UTRA Band 41	2496 – 2690 MHz	-52 dBm	1 MHz
WA E-UTRA Band 42	3400 – 3600 MHz	-52 dBm	1 MHz
WA E-UTRA Band 44	703 – 803 MHz	-52 dBm	1 MHz
LA UTRA TDD Band a) or E-UTRA Band 33	1900 - 1920 MHz	-52 dBm	1 MHz
LA UTRA TDD Band e) or E-UTRA Band 40	2300 - 2400 MHz	-52 dBm	1 MHz
LA UTRA TDD Band a) or E-UTRA Band 34	2010 - 2025 MHz	-52 dBm	1 MHz
LA UTRA TDD Band d) or E-UTRA Band 38	2570 - 2620 MHz	-52 dBm	1 MHz
LA UTRA TDD Band f) or E-UTRA Band 39	1880 – 1920 MHz	-52 dBm	1 MHz
LA E-UTRA Band 41	2496 – 2690 MHz	-52 dBm	1 MHz
LA E-UTRA Band 42	3400 – 3600 MHz	-52 dBm	1 MHz
LA E-UTRA Band 44	703 – 803 MHz	-52 dBm	1 MHz
NOTE 1: The co-existence requirements do not apply for the 10 MHz frequency range immediately outside the operating band (see section 5.2). NOTE 2: The requirements in this table are based on a minimum coupling loss of 67 dB between unsynchronised TDD base stations. The scenarios leading to these requirements are addressed in TR25.942 [8]. NOTE 3: The table above assumes that two operating bands, where the frequency ranges would be overlapping, are not deployed in the same geographical area. For such a case of operation with overlapping frequency arrangements in the same geographical area, special co-existence requirements may apply that are not covered by the 3GPP specifications.			

Table 6.20: BS Spurious emissions limits for operation in same geographic area with unsynchronised UTRA TDD and/or E-UTRA TDD

Void

NOTE: The requirements in Table 6.19 and 6.20 for the Wide Area BS are based on a minimum coupling loss of 67 dB between unsynchronised TDD base stations. The requirements in Table 6.19 and 6.20 for the Local Area BS are based on a coupling loss of 70 dB between unsynchronised Wide Area and Local Area TDD base stations. The scenarios leading to these requirements are addressed in TR25.942 [4].

6.6.3.5.1.1.3 7,68 Mcps TDD option

The RRC filtered mean power of any spurious emission shall not exceed the limits specified in table 6.20A and 6.20B.

Table 6.20A: BS Spurious emissions limits for operation in same geographic area with unsynchronised UTRA TDD (7.68 Mcps TDD and 3.84 Mcps TDD) and/or E-UTRA TDD

System type operating in the same geographic area	Frequency range	Maximum Level	Measurement Bandwidth
WA UTRA TDD Band a) or E-UTRA Band 33	1900 - 1920 MHz	-39 dBm	3,84 MHz
WA UTRA TDD Band a) or E-UTRA Band 34	2010 - 2025 MHz	-39 dBm	3,84 MHz
WA UTRA TDD Band d) or E-UTRA Band 38	2570 - 2620 MHz	-39 dBm	3,84 MHz
LA UTRA TDD Band a) or E-UTRA Band 33	1900 - 1920 MHz	-36 dBm	3,84 MHz
LA UTRA TDD Band a) or E-UTRA Band 34	2010 - 2025 MHz	-36 dBm	3,84 MHz
LA UTRA TDD Band d) or E-UTRA Band 38	2570 - 2620 MHz	-36 dBm	3,84 MHz

Table 6.20B: BS Spurious emissions limits for operation in same geographic area with unsynchronised 1,28 Mcps UTRA TDD and/or E-UTRA TDD

System type operating in the same geographic area	Frequency range	Maximum Level	Measurement Bandwidth
WA UTRA TDD Band a) or E-UTRA Band 33	1900 - 1920 MHz	-39 dBm	1,28 MHz
WA UTRA TDD Band a) or E-UTRA Band 34	2010 - 2025 MHz	-39 dBm	1,28 MHz
WA UTRA TDD Band e) or E-UTRA Band 40	2300 - 2400 MHz	-39 dBm	1.28MHz
WA UTRA TDD Band d) or E-UTRA Band 38	2570 - 2620 MHz	-39 dBm	1,28 MHz
LA UTRA TDD Band a) or E-UTRA Band 33	1900 - 1920 MHz	-36 dBm	1,28 MHz
LA UTRA TDD Band e) or E-UTRA Band 40	2300 - 2400 MHz	-36 dBm	1.28MHz
LA UTRA TDD Band a) or E-UTRA Band 34	2010 - 2025 MHz	-36 dBm	1,28 MHz
LA UTRA TDD Band d) or E-UTRA Band 38	2570 - 2620 MHz	-36 dBm	1,28 MHz

NOTE: The requirements in Table 6.20A and 6.20B for the Wide Area BS are based on a minimum coupling loss of 67 dB between unsynchronised TDD base stations. The requirements in Table 6.20A and 6.20B for the Local Area BS are based on a coupling loss of 70 dB between unsynchronised Wide Area and Local Area TDD base stations.

6.6.3.5.2 Co-located base stations

This requirement shall apply in case of co-location with unsynchronised UTRA TDD and/or E-UTRA TDD BS that comprises uplink receive functionality.

6.6.3.5.2.1 Minimum Requirement

6.6.3.5.2.1.1 3,84 Mcps TDD option

The RRC filtered mean power of any spurious emission in case of co-location shall not exceed the limits specified in table 6.21.

Table 6.21: BS Spurious emissions limits for co-location with unsynchronised UTRA TDD and/or E-UTRA TDD

System type operating in the same geographic area	Frequency range	Maximum Level	Measurement Bandwidth
WA UTRA TDD Band a) or E-UTRA Band 33	1900 - 1920 MHz	-76 dBm	3,84 MHz
WA UTRA TDD Band a) or E-UTRA Band 34	2010 - 2025 MHz	-76 dBm	3,84 MHz
WA UTRA TDD Band d) or E-UTRA Band 38	2570 - 2620 MHz	-76 dBm	3,84 MHz
LA UTRA TDD Band a) or E-UTRA Band 33	1900 - 1920 MHz	-66 dBm	3,84 MHz
LA UTRA TDD Band a) or E-UTRA Band 34	2010 - 2025 MHz	-66 dBm	3,84 MHz
LA UTRA TDD Band d) or E-UTRA Band 38	2570 - 2620 MHz	-66 dBm	3,84 MHz

NOTE: The requirements in Table 6.21 for the Wide Area BS are based on a minimum coupling loss of 30 dB between unsynchronised TDD base stations. The requirements in Table 6.21 for the Local Area BS are based on a minimum coupling loss of 30 dB between unsynchronised Local Area base stations. The co-location of different base station classes is not considered.

6.6.3.5.2.1.2 1,28 Mcps TDD option

In geographic areas where only 1,28 Mcps TDD is deployed, the RRC filtered mean power of any spurious emission in case of co-location shall not exceed the limits specified in table 6.22, otherwise the limits in table 6.23 shall apply.

For BS capable of multi-band operation, the exclusions and conditions in the Note of Table 6.22 apply for each supported operating band. For BS capable of multi-band operation where multiple bands are mapped on separate antenna connectors, the exclusions and conditions in the Note column of Table 6.22 apply for the operating band supported at that antenna connector.

Table 6.22: BS Spurious emissions limits for co-location with unsynchronised 1,28 Mcps UTRA TDD and/or E-UTRA TDD

System type operating in the same geographic area	Frequency range	Maximum Level	Measurement Bandwidth
WA UTRA TDD Band a) or E-UTRA Band 33	1900 - 1920 MHz	-96 dBm	100 kHz
WA UTRA TDD Band a) or E-UTRA Band 34	2010 - 2025 MHz	-96 dBm	100 kHz
WA UTRA TDD Band e) or E-UTRA Band 40	2300 - 2400 MHz	-96 dBm	100 kHz
WA UTRA TDD Band d) or E-UTRA Band 38	2570 - 2620 MHz	-96 dBm	100 kHz
WA UTRA TDD Band f) or E-UTRA Band 39	1880 - 1920 MHz	-96 dBm	100 kHz
WA E-UTRA Band 41	2496 – 2690 MHz	-96 dBm	100 kHz
WA E-UTRA Band 42	3400 – 3600 MHz	-96 dBm	100 kHz
WA E-UTRA Band 44	703 – 803 MHz	-96 dBm	100 kHz
LA UTRA TDD Band a) or E-UTRA Band 33	1900 - 1920 MHz	-88 dBm	100 kHz
LA UTRA TDD Band a) or E-UTRA Band 34	2010 - 2025 MHz	-88 dBm	100 kHz
LA UTRA TDD Band e) or E-UTRA Band 40	2300 - 2400 MHz	-88 dBm	100 kHz
LA UTRA TDD Band d) or E-UTRA Band 38	2570 - 2620 MHz	-88 dBm	100 kHz
LA UTRA TDD Band f) or E-UTRA Band 39	1880 - 1920 MHz	-88 dBm	100 kHz
LA E-UTRA Band 41	2496 – 2690 MHz	-88 dBm	100 kHz
LA E-UTRA Band 42	3400 – 3600 MHz	-88 dBm	100 kHz
LA E-UTRA Band 44	703 – 803 MHz	-88 dBm	100 kHz
NOTE 1: The requirement applies for frequencies more than 10 MHz below or above the supported frequency range declared by the vendor. The current state-of-the-art technology does not allow a single generic solution for co-location with other system on adjacent frequencies for 30dB BS-BS minimum coupling loss. However, there are certain site-engineering solutions that can be used. These techniques are addressed in TR 25.942 [8]. NOTE 2: The requirements in this table are based on a minimum coupling loss of 30 dB between unsynchronised TDD base stations. The scenarios leading to these requirements are addressed in TR 25.942 [8]. NOTE 3: The table above assumes that two operating bands, where the frequency ranges would be overlapping, are not deployed in the same geographical area. For such a case of operation with overlapping frequency arrangements in the same geographical area, special co-existence requirements may apply that are not covered by the 3GPP specifications.			

Table 6.23: Void

6.6.3.5.2.1.3 7,68 Mcps TDD option

The RRC filtered mean power of any spurious emission in case of co-location shall not exceed the limits specified in table 6.24 and 6.25.

Table 6.24: BS Spurious emissions limits for co-location with unsynchronised UTRA TDD (7.68 Mcps TDD and 3.84 Mcps TDD) and/or E-UTRA TDD

System type operating in the same geographic area	Frequency range	Maximum Level	Measurement Bandwidth
WA UTRA TDD Band a) or E-UTRA Band 33	1900 - 1920 MHz	-76 dBm	3,84 MHz
WA UTRA TDD Band a) or E-UTRA Band 34	2010 - 2025 MHz	-76 dBm	3,84 MHz
WA UTRA TDD Band d) or E-UTRA Band 38	2570 - 2620 MHz	-76 dBm	3,84 MHz
LA UTRA TDD Band a) or E-UTRA Band 33	1900 - 1920 MHz	-66 dBm	3,84 MHz
LA UTRA TDD Band a) or E-UTRA Band 34	2010 - 2025 MHz	-66 dBm	3,84 MHz
LA UTRA TDD Band d) or E-UTRA Band 38	2570 - 2620 MHz	-66 dBm	3,84 MHz

Table 6.25: BS Spurious emissions limits for co-location with unsynchronised 1,28 Mcps UTRA TDD and/or E-UTRA TDD

System type operating in the same geographic area	Frequency range	Maximum Level	Measurement Bandwidth
WA UTRA TDD Band a) or E-UTRA Band 33	1900 - 1920 MHz	-76 dBm	1,28 MHz
WA UTRA TDD Band a) or E-UTRA Band 34	2010 - 2025 MHz	-76 dBm	1,28 MHz
WA UTRA TDD Band e) or E-UTRA Band 40	2300 - 2400 MHz	-76 dBm	1.28MHz
WA UTRA TDD Band d) or E-UTRA Band 38	2570 - 2620 MHz	-76 dBm	1,28 MHz
LA UTRA TDD Band a) or E-UTRA Band 33	1900 - 1920 MHz	-71 dBm	1,28 MHz
LA UTRA TDD Band a) or E-UTRA Band 34	2010 - 2025 MHz	-71 dBm	1,28 MHz
LA UTRA TDD Band e) or E-UTRA Band 40	2300 - 2400 MHz	-71 dBm	1.28MHz
LA UTRA TDD Band d) or E-UTRA Band 38	2570 - 2620 MHz	-71 dBm	1,28 MHz

NOTE: The requirements in Table 6.24 and 6.25 for the Wide Area BS are based on a minimum coupling loss of 30 dB between unsynchronised TDD base stations. The requirements in Table 6.24 and 6.25 for the Local Area BS are based on a minimum coupling loss of 30 dB between unsynchronised Local Area base stations. The co-location of different base station classes is not considered.

6.6.3.6 Co-existence with PHS

This requirement may be applied for the protection of PHS in geographic areas in which both PHS and UTRA TDD are deployed. For 3.84 Mcps TDD option, this requirement is also applicable at specified frequencies falling between 12.5MHz below the first carrier frequency used and 12.5MHz above the last carrier frequency used. For 7.68 Mcps TDD option, this requirement is also applicable at specified frequencies falling between 25MHz below the first carrier frequency used and 25MHz above the last carrier frequency used.

6.6.3.6.1 Minimum Requirement

6.6.3.6.1.1 3,84 Mcps TDD option

The power of any spurious emission shall not exceed:

Table 6.26: BS Spurious emissions limits for BS in geographic coverage area of PHS (3.84 Mcps TDD option)

Band	Maximum Level	Measurement Bandwidth	Note
1884.5 - 1915.7 MHz	-41 dBm	300 kHz	Applicable for transmission in 2010-2025 MHz as defined in subclause 5.2 (a).

6.6.3.6.1.2 (void)

6.6.3.6.1.3 7,68 Mcps TDD option

The power of any spurious emission shall not exceed:

Table 6.27: BS Spurious emissions limits for BS in geographic coverage area of PHS (7.68 Mcps TDD option)

Band	Maximum Level	Measurement Bandwidth	Note
1884.5 - 1915.7 MHz	-41 dBm	300 kHz	Applicable for transmission in 2010-2025 MHz as defined in subclause 5.2 (a).

6.7 Transmitter intermodulation

The transmitter intermodulation requirement is a measure of the capability of the transmitter to inhibit the generation of signals in its non-linear elements caused by presence of the wanted signal and an interfering signal reaching the transmitter via the antenna.

The transmit intermodulation level is the power of the intermodulation products when a CDMA interferring signal is injected into the antenna connector at a mean power level of 30 dB lower than that of the mean power of the wanted signal.

For BS capable of multi-band operation where multiple bands are mapped on separate antenna connectors, the single-band requirements apply regardless of the interfering signals position relative to the inter-RF bandwidth gap.

For multi-carrier operation, the interfering signal offset is defined relative to the lower (upper) edge of the wanted signal.

6.7.1 Minimum Requirement

6.7.1.1 3,84 Mcps TDD Option

The frequency of the interference signal shall be ±5 MHz, ±10 MHz and ±15 MHz offset from the subject signal. The Transmit intermodulation level shall not exceed the out of band or the spurious emission requirements of section 6.6.2 and 6.6.3.

6.7.1.2 1,28 Mcps TDD Option:

The interfering signal frequency offset shall be as in Table 6.28.

Table 6.28: Interfering signal frequency offset

Parameter	Value
Interfering signal centre frequency offset from the wanted signal carrier centre	-1.6 MHz -3,2 MHz -4.8 MHz +1.6 MHz +3.2 MHz + 4.8MHz
Interfering signal centre frequency offset from the lower (upper) edge of the wanted signal	-0.8 MHz -2.4MHz -4.0 MHz +0.8 MHz +2.4 MHz +4.0 MHz
NOTE 3: Interference frequencies that are outside of the allocated frequency band specified in subclause 5.2 are excluded from the requirement, unless the interfering signal positions fall within the frequency range of adjacent downlink operating bands in the same geographical area.	

The Transmit intermodulation level shall not exceed the out of band or the spurious emission requirements of section 6.6.2 and 6.6.3 in the presence of a CDMA interferring signal with a mean power level 30 dB lower than the mean power of the wanted signal.

For a BS capable of multi-band operation, the requirement is also applicable inside a inter RF bandwidth gap for interfering signal offsets where the interfering signal falls completely within the inter RF bandwidth gap.

6.7.1.3 7,68 Mcps TDD Option

The frequency of the interference signal shall be ±10 MHz, ±20 MHz and ±30 MHz offset from the subject signal. The Transmit intermodulation level shall not exceed the out of band or the spurious emission requirements of section 6.6.2 and 6.6.3.

6.8 Transmit modulation

For the case of MBSFN-only operation, subclauses 6.8.3 and 6.8.4 shall not be applicable.

6.8.1 Transmit pulse shape filter

The transmit pulse-shaping filter is a root-raised cosine (RRC) with roll-off α =0.22 in the frequency domain. The impulse response of the chip impulse filter $RC_0(t)$ is

$$RC_0(t) = \frac{\sin\left(\pi \frac{t}{T_C}(1-\alpha)\right) + 4\alpha \frac{t}{T_C}\cos\left(\pi \frac{t}{T_C}(1+\alpha)\right)}{\pi \frac{t}{T_C}\left(1-\left(4\alpha \frac{t}{T_C}\right)^2\right)}$$

Where the roll-off factor α =0.22 and T_c is the chip duration.

6.8.2 Modulation Accuracy

The Error Vector Magnitude is a measure of the difference between the reference waveform and the measured waveform. This difference is called the error vector. Both waveforms pass through a matched Root Raised Cosine filter with bandwidth corresponding to the considered chip rate and roll-off α =0,22. Both waveforms are then further modified by selecting the frequency, absolute phase, absolute amplitude and chip clock timing so as to minimise the error vector. The EVM result is defined as the square root of the ratio of the mean error vector power to the mean reference power expressed as a %. The measurement interval is one timeslot. The requirement is valid over the total power dynamic range as specified in subclause 3.1. See Annex C of TS 25.142 for further details.

6.8.2.1 Minimum Requirement

The Modulation accuracy shall not be worse than 12.5 %.

6.8.3 Peak Code Domain Error

The code domain error is computed by projecting the error vector power onto the code domain at a specific spreading factor. The error power for each code is defined as the ratio to the mean power of the reference waveform expressed in dB. And the Peak Code Domain Error is defined as the maximum value for Code Domain Error. The measurement interval is one timeslot.

6.8.3.1 Minimum Requirement

The peak code domain error shall not exceed -28 dB at spreading factor 16. For 7.68 Mcps, the peak code domain error shall not exceed -31 dB at spreading factor 32.

6.8.4 Relative Code Domain Error for 64QAM modulation

The Relative Code Domain Error is computed by projecting the error vector onto the code domain at a specified spreading factor. Only the active code channels in the composite reference waveform are considered for this requirement. The Relative Code Domain Error for every active code is defined as the ratio of the mean power of the error projection onto that code, to the mean power of the active code in the composite reference waveform. This ratio is expressed in dB. The measurement interval is one timeslot.

The requirement for Relative Code Domain Error is only applicable for 64QAM modulated codes.

6.8.4.1 Minimum requirement

The average Relative Code Domain Error for 64QAM modulated codes shall not exceed -21.9dB at spreading factor 16.

6.8.5 Time alignment error in MIMO transmission

In MIMO transmission, signals are transmitted from two or more antennas. These signals shall be aligned. The time alignment error in MIMO transmission is specified as the delay between the signals from two antennas at the antenna ports.

6.8.5.1 Minimum Requirement

The time alignment error in MIMO for any possible configuration of two transmit antennas shall not exceed 65 ns.

7 Receiver characteristics

7.1 General

The requirements in clause 7 are expressed for a single receiver antenna connector. For receivers with antenna diversity, the requirements apply for each receiver antenna connector.

For ACS, blocking and intermodulation characteristics, the negative offsets of the interfering signal apply relative to the assigned channel frequency of the lowest carrier frequency used and positive offsets of the interfering signal apply relative to the assigned channel frequency of the highest carrier frequency used.

A BS supporting 1.28Mcps MC-HSUPA receives mutilple carriers simultaneously on adjacent carrier frequencies.

Unless otherwise stated, the receiver characteristics are specified at the BS antenna connector (test port A) with a full complement of transceivers for the configuration in normal operating conditions. If any external apparatus such as a RX amplifier, a filter or the combination of such devices is used, requirements apply at the far end antenna connector (port B).

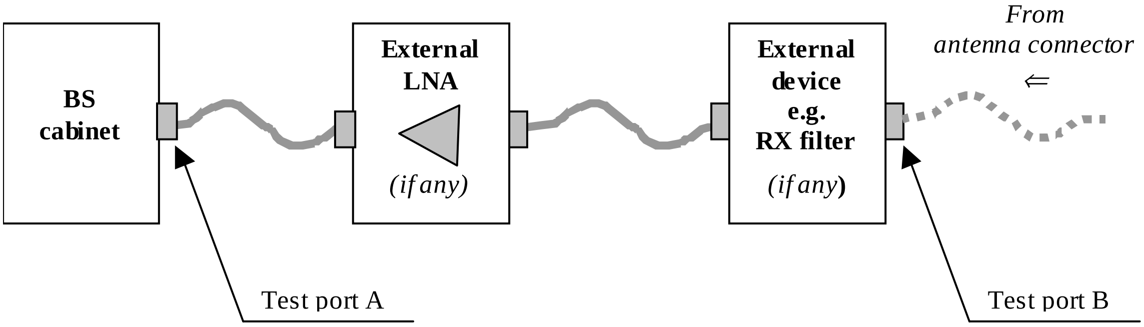

Figure 7.1: Receiver test ports

7.2 Reference sensitivity level

The reference sensitivity level is the minimum mean power received at the antenna connector at which the BER shall not exceed the specific value indicated in section 7.2.1.

7.2.1 Minimum Requirement

7.2.1.1 3,84 Mcps TDD Option

Using the reference measurement channel specified in Annex A, the reference sensitivity level and performance of the BS shall be as specified in table 7.1.

Table 7.1: BS reference sensitivity level

BS Class	Reference measurement channel data rate	BS reference sensitivity level	BER
Wide Area BS	12.2 kbps	-109 dBm	BER shall not exceed 0.001
Local Area BS	12.2 kbps	-95 dBm	BER shall not exceed 0.001

7.2.1.2 1,28 Mcps TDD Option

Using the reference measurement channel specified in Annex A, the reference sensitivity level and performance of the BS shall be as specified in table7.1A

Table7.1A: BS reference sensitivity level

BS Class	Reference measurement channel data rate	BS reference sensitivity level	BER
Wide Area BS	12.2 kbps	-110 dBm	BER shall not exceed 0.001
Local Area BS	12.2 kbps	-96 dBm	BER shall not exceed 0.001
Home BS	12.2 kbps	-101dBm	BER shall not exceed 0.001

7.2.1.3 7,68 Mcps TDD Option

Using the reference measurement channel specified in Annex A, the reference sensitivity level and performance of the BS shall be as specified in table 7.1B.

Table 7.1B: BS reference sensitivity level

BS Class	Reference measurement channel data rate	BS reference sensitivity level	BER
Wide Area BS	12.2 kbps	-109 dBm	BER shall not exceed 0.001
Local Area BS	12.2 kbps	-95 dBm	BER shall not exceed 0.001

7.3 Dynamic range

Receiver dynamic range is the receiver ability to handle a rise of interference in the reception frequency channel. The receiver shall fulfil a specified BER requirement for a specified sensitivity degradation of the wanted signal in the presence of an interfering AWGN signal in the same reception frequency channel.

7.3.1 Minimum requirement

7.3.1.1 3,84 Mcps TDD Option

The BER shall not exceed 0.001 for the parameters specified in Table 7.2.

Table 7.2: Dynamic Range

Parameter		Level	Unit
Reference measurement channel data rate		12.2	kbps
Wanted signal mean power	Wide Area BS	-79	dBm
	Local Area BS	-65	dBm
Interfering AWGN signal	Wide Area BS	-73	dBm/3.84 MHz
	Local Area BS	-59	dBm/3.84 MHz

7.3.1.2 1,28 Mcps TDD Option:

The BER shall not exceed 0.001 for the parameters specified in Table7.2A

Table 7.2A: Dynamic Range

Parameter		Level	Unit
Reference measurement channel data rate		12.2	kbps
Wanted signal mean power	Wide Area BS	-80	dBm
	Local Area BS	-66	dBm
	Home BS	-51	dBm
Interfering AWGN signal	Wide Area BS	-76	dBm/1.28 MHz
	Local Area BS	-62	dBm/1.28 MHz
	Home BS	-47	dBm/1.28 MHz

7.3.1.3 7,68 Mcps TDD Option

The BER shall not exceed 0.001 for the parameters specified in Table 7.2B.

Table 7.2B: Dynamic Range

Parameter		Level	Unit
Reference measurement channel data rate		12.2	kbps
Wanted signal mean power	Wide Area BS	-79	dBm
	Local Area BS	-65	dBm
Interfering AWGN signal	Wide Area BS	-70	dBm/7.68 MHz
	Local Area BS	-56	dBm/7.68 MHz

7.4 Adjacent Channel Selectivity (ACS)

Adjacent channel selectivity (ACS) is a measure of the receiver ability to receive a wanted signal at its assigned channel frequency in the presence of a single code CDMA modulated adjacent channel signal at a given frequency offset from the center frequency of the assigned channel. ACS is the ratio of the receiver filter attenuation on the assigned channel frequency to the receiver filter attenuation on the adjacent channel(s).

7.4.1 Minimum Requirement

7.4.1.1 3,84 Mcps TDD Option

The BER shall not exceed 0.001 for the parameters specified in table 7.3.

Table 7.3: Adjacent channel selectivity

Parameter		Level	Unit
Reference measurement channel data rate		12.2	kbps
Wanted signal mean power	Wide Area BS	-103	dBm
	Local Area BS	-89	dBm
Interfering signal mean power	Wide Area BS	-52	dBm
	Local Area BS	-38	dBm
Fuw offset (Modulated)		5	MHz

7.4.1.2 1,28 Mcps TDD Option

The BER shall not exceed 0.001 for the parameters specified in table7.3A.

For BS capable of multi-band operation, the requirement applies in addition inside any inter RF bandwidth gap as long as the inter RF bandwidth gap size is at least 1.6MHz. The interfering signal offset is defined relative to lower/upper RF bandwidth edges inside the inter RF bandwidth gap and is equal to -0.8MHz/+0.8MHz, respectively.

Table 7.3A: Adjacent channel selectivity

Parameter		Level	Unit
Reference measurement channel data rate		12.2	kbps
Wanted signal mean power	Wide Area BS	-104	dBm
	Local Area BS	-90	dBm
	Home BS	-77	dBm
Interfering signal mean power	Wide Area BS	-55	dBm
	Local Area BS	-41	dBm
	Home BS	-28	dBm
Fuw offset (Modulated)		±1.6	MHz

7.4.1.3 7,68 Mcps TDD Option

The BER shall not exceed 0.001 for the parameters specified in table 7.3B.

Table 7.3B: Adjacent channel selectivity

Parameter		Level	Unit
Reference measurement channel data rate		12.2	kbps
Wanted signal mean power	Wide Area BS	-103	dBm
	Local Area BS	-89	dBm
Interfering signal mean power	Wide Area BS	-49	dBm
	Local Area BS	-35	dBm
Fuw offset (Modulated)		10	MHz

7.5 Blocking characteristics

The blocking characteristics is a measure of the receiver ability to receive a wanted signal at its assigned channel frequency in the presence of an unwanted interferer on frequencies other than those of the adjacent channels. The blocking performance requirement applies to interfering signals with center frequency within the ranges specified in the tables below, using a 1MHz step size.

7.5.0 Minimum requirement

7.5.0.1 3,84 Mcps TDD Option

The static reference performance as specified in clause 7.2.1 shall be met with a wanted and an interfering signal coupled to BS antenna input using the parameters as specified in table 7.4-1(a) - (d) for the Wide Area BS and as specified in table 7.4-2(a) - (d) for the Local Area BS.

Table 7.4-1 (a): Blocking requirements for Wide Area BS for operating bands defined in 5.2(a)

Centre Frequency of Interfering Signal	Interfering Signal Mean Power	Wanted Signal Mean Power	Minimum Offset of Interfering Signal	Type of Interfering Signal
1900 - 1920 MHz, 2010 - 2025 MHz	-40 dBm	-103 dBm	10 MHz	WCDMA signal with one code
1880 - 1900 MHz, 1990 - 2010 MHz, 2025 - 2045 MHz	-40 dBm	-103 dBm	10 MHz	WCDMA signal with one code
1920 - 1980 MHz	-40 dBm	-103 dBm	10 MHz	WCDMA signal with one code
1 - 1880 MHz, 1980 - 1990 MHz, 2045 - 12750 MHz	-15 dBm	-103 dBm	—	CW carrier

Table 7.4-1(b): Blocking requirements for Wide Area BS for operating bands defined in 5.2(b)

Centre Frequency of Interfering Signal	Interfering Signal Mean Power	Wanted Signal Mean Power	Minimum Offset of Interfering Signal	Type of Interfering Signal
1850 - 1990 MHz	-40 dBm	-103 dBm	10 MHz	WCDMA signal with one code
1830 - 1850 MHz, 1990 - 2010 MHz	-40 dBm	-103 dBm	10 MHz	WCDMA signal with one code
1 - 1830 MHz, 2010 - 12750 MHz	-15 dBm	-103 dBm	—	CW carrier

Table 7.4-1(c): Blocking requirements for Wide Area BS for operating bands defined in 5.2(c)

Centre Frequency of Interfering Signal	Interfering Signal Mean Power	Wanted Signal Mean Power	Minimum Offset of Interfering Signal	Type of Interfering Signal
1910 - 1930 MHz	-40 dBm	-103 dBm	10 MHz	WCDMA signal with one code
1890 - 1910 MHz, 1930 - 1950 MHz	-40 dBm	-103 dBm	10 MHz	WCDMA signal with one code
1 - 1890 MHz, 1950 - 12750 MHz	-15 dBm	-103 dBm	—	CW carrier

Table 7.4-1 (d): Blocking requirements for Wide Area BS for operating bands defined in 5.2(d)

Centre Frequency of Interfering Signal	Interfering Signal Mean Power	Wanted Signal Mean Power	Minimum Offset of Interfering Signal	Type of Interfering Signal
2570 - 2620 MHz	-40 dBm	-103 dBm	10 MHz	WCDMA signal with one code
2550 - 2570 MHz 2620 - 2640 MHz	-40 dBm	-103 dBm	10 MHz	WCDMA signal with one code
2500 - 2570 MHz 2620 - 2690 MHz	-40 dBm	-103 dBm	10 MHz	WCDMA signal with one code
1 - 2550 MHz, 2690 - 12750 MHz	-15 dBm	-103 dBm	—	CW carrier

Table 7.4-2 (a): Blocking requirements for Local Area BS for operating bands defined in 5.2(a)

Centre Frequency of Interfering Signal	Interfering Signal mean power	Wanted Signal mean power	Minimum Offset of Interfering Signal	Type of Interfering Signal
1900 - 1920 MHz, 2010 - 2025 MHz	-30 dBm	-89 dBm	10 MHz	WCDMA signal with one code
1880 - 1900 MHz, 1990 - 2010 MHz, 2025 - 2045 MHz	-30 dBm	-89 dBm	10 MHz	WCDMA signal with one code
1920 - 1980 MHz	-30 dBm	-89 dBm	10 MHz	WCDMA signal with one code
1 - 1880 MHz, 1980 - 1990 MHz, 2045 - 12750 MHz	-15 dBm	-89 dBm	—	CW carrier

Table 7.4-2 (b): Blocking requirements for Local Area BS for operating bands defined in 5.2(b)

Centre Frequency of Interfering Signal	Interfering Signal mean power	Wanted Signal mean power	Minimum Offset of Interfering Signal	Type of Interfering Signal
1850 - 1990 MHz	-30 dBm	-89 dBm	10 MHz	WCDMA signal with one code
1830 - 1850 MHz, 1990 - 2010 MHz	-30 dBm	-89 dBm	10 MHz	WCDMA signal with one code
1 - 1830 MHz, 2010 - 12750 MHz	-15 dBm	-89 dBm	—	CW carrier

Table 7.4-2 (c): Blocking requirements for Local BS for operating bands defined in 5.2(c)

Centre Frequency of Interfering Signal	Interfering Signal mean power	Wanted Signal mean power	Minimum Offset of Interfering Signal	Type of Interfering Signal
1910 - 1930 MHz	-30 dBm	-89 dBm	10 MHz	WCDMA signal with one code
1890 - 1910 MHz, 1930 - 1950 MHz	-30 dBm	-89 dBm	10 MHz	WCDMA signal with one code
1 - 1890 MHz, 1950 - 12750 MHz	-15 dBm	-89 dBm	—	CW carrier

Table 7.4-2 (d): Blocking requirements for Local Area BS for operating bands defined in 5.2(d)

Centre Frequency of Interfering Signal	Interfering Signal mean power	Wanted Signal mean power	Minimum Offset of Interfering Signal	Type of Interfering Signal
2570 - 2620 MHz	-30 dBm	-89 dBm	10 MHz	WCDMA signal with one code
2550 - 2570 MHz 2620 - 2640 MHz	-30 dBm	-89 dBm	10 MHz	WCDMA signal with one code
2500 - 2570 MHz 2620 - 2690 MHz	-30 dBm	-89 dBm	10 MHz	WCDMA signal with one code
1 - 2550 MHz, 2690 - 12750 MHz	-15 dBm	-89 dBm	—	CW carrier

7.5.0.2 1,28 Mcps TDD Option

The static reference performance as specified in clause 7.2.1 shall be met with a wanted and an interfering signal coupled to BS antenna input using the parameters as specified in table 7.4A1(a) - (f) for the Wide Area BS and as specified in table 7.4A2(a) - (f) for the Local Area BS and Home BS.

For BS capable of multi-band operation, the requirement in the in-band blocking frequency range applies for each supported operating band. The requirements applies in addition inside any inter RF bandwidth gap as long as the inter RF bandwidth gap size is at least 4.8MHz. The interfering signal offset is defined relative to lower/upper RF bandwidth edges inside the inter RF bandwidth gap and is equal to -2.4MHz/+2.4MHz, respectively.

For BS capable of multi-band operation, the requirement in the out-of-band blocking frequency ranges apply for each supported operating band, with the exception that the in-band blocking frequency ranges of all supported operating bands according to Tables 7.4A1 and 7.4A2 shall be excluded from the out-of-band blocking requirement.

Table 7.4A1(a): Blocking requirements for Wide Area BS in operating bands defined in 5.2(a)

Center Frequency of Interfering Signal	Interfering Signal Mean Power	Wanted Signal Mean Power	Minimum Offset of Interfering Signal	Type of Interfering Signal
1900 - 1920 MHz, 2010 - 2025 MHz	-40 dBm	-104 dBm	±3.2MHz	Narrow band CDMA signal with one code
1880 - 1900 MHz, 1990 - 2010 MHz, 2025 - 2045 MHz	-40dBm	-104 dBm	±3.2MHz	Narrow band CDMA signal with one code
1920 - 1980 MHz	-40dBm	-104 dBm	±3.2MHz	Narrow band CDMA signal with one code
1 - 1880 MHz, 1980 - 1990 MHz, 2045 - 12750 MHz	-15dBm	-104 dBm	—	CW carrier
NOTE*: For BS capable of multi-band operation, in case the interfering signal for in-band blocking is not in the in-band blocking frequency range of the operating band where the wanted signal is present, the wanted signal mean power shall not exceed -108.6dBm.				

Table 7.4A1(b): Blocking requirements for Wide Area BS in operating bands defined in 5.2(b)

Center Frequency of Interfering Signal	Interfering Signal Mean Power	Wanted Signal Mean Power	Minimum Offset of Interfering Signal	Type of Interfering Signal
1850 - 1990 MHz	-40dBm	-104 dBm	±3.2MHz	Narrow band CDMA signal with one code
1830 - 1850 MHz, 1990 - 2010 MHz	-40 dBm	-104 dBm	±3.2MHz	Narrow band CDMA signal with one code
1 - 1830 MHz, 2010 - 12750 MHz	-15 dBm	-104 dBm	—	CW carrier
NOTE*: For BS capable of multi-band operation, in case the interfering signal for in-band blocking is not in the in-band blocking frequency range of the operating band where the wanted signal is present, the wanted signal mean power shall not exceed -108.6dBm.				

Table 7.4A1(c): Blocking requirements for Wide Area BS in operating bands defined in 5.2(c)

Center Frequency of Interfering Signal	Interfering Signal Mean Power	Wanted Signal Mean Power	Minimum Offset of Interfering Signal	Type of Interfering Signal
1910 - 1930 MHz	-40dBm	-104 dBm	±3.2MHz	Narrow band CDMA signal with one code
1890 - 1910 MHz, 1930 - 1950 MHz	-40dBm	-104 dBm	±3.2 MHz	Narrow band CDMA signal with one code
1 - 1890 MHz, 1950 - 12750 MHz	-15 dBm	-104 dBm	—	CW carrier
NOTE*: For BS capable of multi-band operation, in case the interfering signal for in-band blocking is not in the in-band blocking frequency range of the operating band where the wanted signal is present, the wanted signal mean power shall not exceed -108.6dBm.				

Table 7.4A1(d): Blocking requirements for Wide Area BS in operating bands defined in 5.2(d)

Center Frequency of Interfering Signal	Interfering Signal Mean Power	Wanted Signal Mean Power	Minimum Offset of Interfering Signal	Type of Interfering Signal
2570 - 2620 MHz	-40dBm	-104 dBm	±3.2MHz	Narrow band CDMA signal with one code
2500 - 2570 MHz, 2620 - 2690 MHz	-40dBm	-104 dBm	±3.2 MHz	Narrow band CDMA signal with one code
1 - 2500 MHz, 2690 - 12750 MHz	-15 dBm	-104 dBm	—	CW carrier
NOTE*: For BS capable of multi-band operation, in case the interfering signal for in-band blocking is not in the in-band blocking frequency range of the operating band where the wanted signal is present, the wanted signal mean power shall not exceed -108.6dBm.				

Table 7.4A1(e): Blocking requirements for Wide Area BS in operating bands defined in 5.2(e)

Center Frequency of Interfering Signal	Interfering Signal Mean Power	Wanted Signal Mean Power	Minimum Offset of Interfering Signal	Type of Interfering Signal
2300 - 2400 MHz	-40dBm	-104 dBm	±3.2MHz	Narrow band CDMA signal with one code
2280 - 2300 MHz, 2400 - 2420MHz	-40dBm	-104 dBm	±3.2 MHz	Narrow band CDMA signal with one code
1 - 2280 MHz, 2420 – 12750 MHz	-15 dBm	-104 dBm	—	CW carrier
NOTE*: For BS capable of multi-band operation, in case the interfering signal for in-band blocking is not in the in-band blocking frequency range of the operating band where the wanted signal is present, the wanted signal mean power shall not exceed -108.6dBm.				

Table 7.4A1(f): Blocking requirements for Wide Area BS in operating bands defined in 5.2(f)

Center Frequency of Interfering Signal	Interfering Signal Mean Power	Wanted Signal Mean Power	Minimum Offset of Interfering Signal	Type of Interfering Signal
1880 - 1920 MHz	-40dBm	-104 dBm	±3.2 MHz	Narrow band CDMA signal with one code
1860 - 1880 MHz, 1920 – 1940 MHz	-40dBm	-104 dBm	±3.2 MHz	Narrow band CDMA signal with one code
1 - 1860 MHz, 1940 – 12750 MHz	-15 dBm	-104 dBm	—	CW carrier
NOTE*: For BS capable of multi-band operation, in case the interfering signal for in-band blocking is not in the in-band blocking frequency range of the operating band where the wanted signal is present, the wanted signal mean power shall not exceed -108.6dBm.				

Table 7.4A2(a): Blocking requirements for Local Area BS and Home BS in operating bands defined in 5.2(a)

Center Frequency of Interfering Signal	Interfering Signal mean power	Wanted Signal mean power	Minimum Offset of Interfering Signal	Type of Interfering Signal
1900 - 1920 MHz, 2010 - 2025 MHz	-30 dBm	-90 dBm	±3.2MHz	Narrow band CDMA signal with one code
1880 - 1900 MHz, 1990 - 2010 MHz, 2025 - 2045 MHz	-30 dBm	-90 dBm	±3.2MHz	Narrow band CDMA signal with one code
1920 - 1980 MHz	-30 dBm	-90 dBm	±3.2MHz	Narrow band CDMA signal with one code
1 - 1880 MHz, 1980 - 1990 MHz, 2045 - 12750 MHz	-15dBm	-90 dBm	—	CW carrier
NOTE*: For BS capable of multi-band operation, in case the interfering signal for in-band blocking is not in the in-band blocking frequency range of the operating band where the wanted signal is present, the wanted signal mean power shall not exceed -94.6dBm for Local Area BS.				

Table 7.4A2(b): Blocking requirements for Local Area BS and Home BS in operating bands defined in 5.2(b)

Center Frequency of Interfering Signal	Interfering Signal mean power	Wanted Signal mean power	Minimum Offset of Interfering Signal	Type of Interfering Signal
1850 - 1990 MHz	-30 dBm	-90 dBm	±3.2MHz	Narrow band CDMA signal with one code
1830 - 1850 MHz, 1990 - 2010 MHz	-30 dBm	-90 dBm	±3.2MHz	Narrow band CDMA signal with one code
1 - 1830 MHz, 2010 - 12750 MHz	-15 dBm	-90 dBm	—	CW carrier
NOTE*: For BS capable of multi-band operation, in case the interfering signal for in-band blocking is not in the in-band blocking frequency range of the operating band where the wanted signal is present, the wanted signal mean power shall not exceed -94.6dBm for Local Area BS.				

Table 7.4A2(c): Blocking requirements for Local Area BS and Home BS in operating bands defined in 5.2(c)

Center Frequency of Interfering Signal	Interfering Signal mean power	Wanted Signal mean power	Minimum Offset of Interfering Signal	Type of Interfering Signal
1910 - 1930 MHz	-30 dBm	-90 dBm	±3.2MHz	Narrow band CDMA signal with one code
1890 - 1910 MHz, 1930 - 1950 MHz	-30 dBm	-90 dBm	±3.2 MHz	Narrow band CDMA signal with one code
1 - 1890 MHz, 1950 - 12750 MHz	-15 dBm	-90 dBm	—	CW carrier
NOTE*: For BS capable of multi-band operation, in case the interfering signal for in-band blocking is not in the in-band blocking frequency range of the operating band where the wanted signal is present, the wanted signal mean power shall not exceed -94.6dBm for Local Area BS.				

Table 7.4A2(d): Blocking requirements for Local Area BS and Home BS in operating bands defined in 5.2(c)

Center Frequency of Interfering Signal	Interfering Signal mean power	Wanted Signal mean power	Minimum Offset of Interfering Signal	Type of Interfering Signal
2570 - 2620 MHz	-30 dBm	-90 dBm	±3.2MHz	Narrow band CDMA signal with one code
2500 - 2570 MHz, 2620 - 2690 MHz	-30 dBm	-90 dBm	±3.2 MHz	Narrow band CDMA signal with one code
1 - 2500 MHz, 2690 - 12750 MHz	-15 dBm	-90 dBm	—	CW carrier
NOTE*: For BS capable of multi-band operation, in case the interfering signal for in-band blocking is not in the in-band blocking frequency range of the operating band where the wanted signal is present, the wanted signal mean power shall not exceed -94.6dBm for Local Area BS.				

Table 7.4A2(e): Blocking requirements for Local Area BS and Home BS in operating bands defined in 5.2(e)

Center Frequency of Interfering Signal	Interfering Signal mean power	Wanted Signal mean power	Minimum Offset of Interfering Signal	Type of Interfering Signal
2300 - 2400 MHz	-30 dBm	-90 dBm	±3.2MHz	Narrow band CDMA signal with one code
2280 - 2300 MHz, 2400 - 2420MHz	-30 dBm	-90 dBm	±3.2 MHz	Narrow band CDMA signal with one code
1 - 2280 MHz, 2420 – 12750 MHz	-15 dBm	-90 dBm	—	CW carrier
NOTE*: For BS capable of multi-band operation, in case the interfering signal for in-band blocking is not in the in-band blocking frequency range of the operating band where the wanted signal is present, the wanted signal mean power shall not exceed -94.6dBm for Local Area BS.				

Table 7.4A2(f): Blocking requirements for Local Area BS and Home BS in operating bands defined in 5.2(f)

Center Frequency of Interfering Signal	Interfering Signal mean power	Wanted Signal mean power	Minimum Offset of Interfering Signal	Type of Interfering Signal
1880-1920 MHz	-30 dBm	-90 dBm	±3.2 MHz	Narrow band CDMA signal with one code
1860 - 1880 MHz, 1920 - 1940MHz	-30 dBm	-90 dBm	±3.2 MHz	Narrow band CDMA signal with one code
1 - 1860 MHz, 1940 – 12750 MHz	-15 dBm	-90 dBm	—	CW carrier
NOTE*: For BS capable of multi-band operation, in case the interfering signal for in-band blocking is not in the in-band blocking frequency range of the operating band where the wanted signal is present, the wanted signal mean power shall not exceed -94.6dBm for Local Area BS.				

7.5.0.3 7,68 Mcps TDD Option

The static reference performance as specified in clause 7.2.1 shall be met with a wanted and an interfering signal coupled to BS antenna input using the parameters as specified in table 7.4B1(a) - (d) for the Wide Area BS and as specified in table 7.4B2(a) - (d) for the Local Area BS.

Table 7.4B1 (a): Blocking requirements for Wide Area BS for operating bands defined in 5.2(a)

Centre Frequency of Interfering Signal	Interfering Signal Mean Power	Wanted Signal Mean Power	Minimum Offset of Interfering Signal	Type of Interfering Signal
1900 - 1920 MHz, 2010 - 2025 MHz	-40 dBm	-103 dBm	20 MHz	WCDMA signal with one code
1880 - 1900 MHz, 1990 - 2010 MHz, 2025 - 2045 MHz	-40 dBm	-103 dBm	20 MHz	WCDMA signal with one code
1920 - 1980 MHz	-40 dBm	-103 dBm	20 MHz	WCDMA signal with one code
1 - 1880 MHz, 1980 - 1990 MHz, 2045 - 12750 MHz	-15 dBm	-103 dBm	—	CW carrier

Table 7.4B1 (b): Blocking requirements for Wide Area BS for operating bands defined in 5.2(b)

Centre Frequency of Interfering Signal	Interfering Signal Mean Power	Wanted Signal Mean Power	Minimum Offset of Interfering Signal	Type of Interfering Signal
1850 - 1990 MHz	-40 dBm	-103 dBm	20 MHz	WCDMA signal with one code
1830 - 1850 MHz, 1990 - 2010 MHz	-40 dBm	-103 dBm	20 MHz	WCDMA signal with one code
1 - 1830 MHz, 2010 - 12750 MHz	-15 dBm	-103 dBm	—	CW carrier

Table 7.4B1 (c): Blocking requirements for Wide Area BS for operating bands defined in 5.2(c)

Centre Frequency of Interfering Signal	Interfering Signal Mean Power	Wanted Signal Mean Power	Minimum Offset of Interfering Signal	Type of Interfering Signal
1910 - 1930 MHz	-40 dBm	-103 dBm	20 MHz	WCDMA signal with one code
1890 - 1910 MHz, 1930 - 1950 MHz	-40 dBm	-103 dBm	20 MHz	WCDMA signal with one code
1 - 1890 MHz, 1950 - 12750 MHz	-15 dBm	-103 dBm	—	CW carrier

Table 7.4B1 (d): Blocking requirements for Wide Area BS for operating bands defined in 5.2(d)

Centre Frequency of Interfering Signal	Interfering Signal Mean Power	Wanted Signal Mean Power	Minimum Offset of Interfering Signal	Type of Interfering Signal
2570 - 2620 MHz	-40 dBm	-103 dBm	20 MHz	WCDMA signal with one code
2550 - 2570 MHz 2620 - 2640 MHz	-40 dBm	-103 dBm	20 MHz	WCDMA signal with one code
2500 - 2570 MHz 2620 - 2690 MHz	-40 dBm	-103 dBm	20 MHz	WCDMA signal with one code
1 - 2550 MHz, 2690 - 12750 MHz	-15 dBm	-103 dBm	—	CW carrier

Table 7.4B2 (a): Blocking requirements for Wide Area BS for operating bands defined in 5.2(a)

Centre Frequency of Interfering Signal	Interfering Signal mean power	Wanted Signal mean power	Minimum Offset of Interfering Signal	Type of Interfering Signal
1900 - 1920 MHz, 2010 - 2025 MHz	-30 dBm	-89 dBm	20 MHz	WCDMA signal with one code
1880 - 1900 MHz, 1990 - 2010 MHz, 2025 - 2045 MHz	-30 dBm	-89 dBm	20 MHz	WCDMA signal with one code
1920 - 1980 MHz	-30 dBm	-89 dBm	20 MHz	WCDMA signal with one code
1 - 1880 MHz, 1980 - 1990 MHz, 2045 - 12750 MHz	-15 dBm	-89 dBm	—	CW carrier

Table 7.4B2 (b): Blocking requirements for Wide Area BS for operating bands defined in 5.2(b)

Centre Frequency of Interfering Signal	Interfering Signal mean power	Wanted Signal mean power	Minimum Offset of Interfering Signal	Type of Interfering Signal
1850 - 1990 MHz	-30 dBm	-89 dBm	20 MHz	WCDMA signal with one code
1830 - 1850 MHz, 1990 - 2010 MHz	-30 dBm	-89 dBm	20 MHz	WCDMA signal with one code
1 - 1830 MHz, 2010 - 12750 MHz	-15 dBm	-89 dBm	—	CW carrier

Table 7.4B2 (c): Blocking requirements for Wide Area BS for operating bands defined in 5.2(c)

Centre Frequency of Interfering Signal	Interfering Signal mean power	Wanted Signal mean power	Minimum Offset of Interfering Signal	Type of Interfering Signal
1910 - 1930 MHz	-30 dBm	-89 dBm	20 MHz	WCDMA signal with one code
1890 - 1910 MHz, 1930 - 1950 MHz	-30 dBm	-89 dBm	20 MHz	WCDMA signal with one code
1 - 1890 MHz, 1950 - 12750 MHz	-15 dBm	-89 dBm	—	CW carrier

Table 7.4B2 (d): Blocking requirements for Wide Area BS for operating bands defined in 5.2(d)

Centre Frequency of Interfering Signal	Interfering Signal mean power	Wanted Signal mean power	Minimum Offset of Interfering Signal	Type of Interfering Signal
2570 - 2620 MHz	-30 dBm	-89 dBm	20 MHz	WCDMA signal with one code
2550 - 2570 MHz 2620 - 2640 MHz	-30 dBm	-89 dBm	20 MHz	WCDMA signal with one code
2500 - 2570 MHz 2620 - 2690 MHz	-30 dBm	-89 dBm	20 MHz	WCDMA signal with one code
1 - 2550 MHz, 2690 - 12750 MHz	-15 dBm	-89 dBm	—	CW carrier

7.5.1 Co-location with GSM, DCS, UTRA FDD and/or E-UTRA FDD, UTRA TDD and/or E-UTRA TDD

This additional blocking requirement may be applied for the protection of TDD BS receivers when GSM, DCS, UTRA FDD, E-UTRA FDD unsynchonized UTRA TDD and/or unsynchronized E-UTRA TDD BTS operating in a different frequency band are co-located with UTRA TDD Wide Area BS.

The blocking performance requirement applies to interfering signals with centre frequency within the ranges specified in the tables below, using a 1MHz step size.

In case this additional blocking requirement is applied, the static reference performance as specified in clause 7.2.1 shall be met with a wanted and an interfering signal coupled to BS antenna input using the following parameters.

7.5.1.1 3,84 Mcps TDD Option

Table 7.4 (d): Additional blocking requirements for operating bands defined in 5.2(a) and 5.2 (d)

System type operating in the same geographic area	Centre Frequency of Interfering Signal	Interfering Signal Mean Power	Wanted Signal Mean Power	Minimum Offset of Interfering Signal	Type of Interfering Signal	N
GSM900	921 - 960 MHz	+16 dBm	-103 dBm	—	CW carrier	
DCS 1800	1805 - 1880 MHz	+16 dBm	-103 dBm	—	CW carrier	
WA BS UTRA FDD Band VII or E-UTRA Band 7	2620 - 2690 MHz	+13 dBm	-103 dBm	—	CW carrier	This req does no UTRA T operatin 5.2(a)
LA BS UTRA FDD Band VII or E-UTRA Band 7	2620 - 2690 MHz	-6 dBm	-103 dBm	—	CW carrier	This req does no UTRA T operatin 5.2(a)

NOTE 1: These requirements do not apply when the interfering signal falls within the uplink operating band or in the 10 MHz imm outside the uplink operating band.

NOTE 2: Some combinations of bands may not be possible to co-site based on the requirements above. The current state-of-the- technology does not allow a single generic solution for co-location of UTRA TDD with UTRA FDD or E-UTRA FDD on a frequencies for 30dB BS-BS minimum coupling loss. However, there are certain site-engineering solutions that can be These techniques are addressed in TR 25.942 [8].

Table 7.4 (e): Void

7.5.1.2 1,28 Mcps TDD Option

Table 7.4A (d): Additional blocking requirements for Wide Area BS

System type operating in the same geographic area	Centre Frequency of Interfering Signal	Interfering Signal Mean Power	Wanted Signal Mean Power	Minimum Offset of Interfering Signal	Type of Interfering Signal	Note
Macro GSM900	921 - 960 MHz	+16 dBm	-104 dBm	—	CW carrier	
Macro DCS1800	1805 -- 1880 MHz	+16 dBm	-104 dBm	—	CW carrier	For UTRA TDD B operating in Ban 5.2(f), it applies f 1805 - 1850 MH
GSM850 or CDMA850	869 - 894 MHz	+16 dBm	-104 dBm	—	CW carrier	
WA BS UTRA FDD Band I or E-UTRA Band 1	2110 - 2170 MHz	+16 dBm	-104 dBm	—	CW carrier	
WA BS UTRA FDD Band III or E-UTRA Band 3	1805 - 1880 MHz	+16 dBm	-104 dBm	—	CW carrier	For UTRA TDD B operating in Ban 5.2(f), the requirement is FF
WA BS UTRA FDD Band V or E-UTRA Band 5	869 - 894 MHz	+16 dBm	-104 dBm	—	CW carrier	
WA BS UTRA FDD Band VII or E-UTRA Band 7	2620 - 2690 MHz	+16 dBm	-104 dBm	—	CW carrier	This requiremen does not apply t UTRA TDD BS operating in Ban 5.2(a), 5.2 (e) an 5.2 (f)
WA UTRA TDD Band a) or E-UTRA Band 33	1900 - 1920 MHz	+16 dBm	-104 dBm	—	CW carrier	
WA UTRA TDD Band a) or E-UTRA Band 34	2010 - 2025 MHz	+16 dBm	-104 dBm	—	CW carrier	
WA UTRA TDD Band d) or E-UTRA Band 38	2570 - 2620 MHz	+16 dBm	-104 dBm	—	CW carrier	
WA UTRA TDD Band f) or E-UTRA Band 39	1880 - 1920 MHz	+16 dBm	-104 dBm	—	CW carrier	
WA UTRA TDD Band e) or E-UTRA Band 40	2300 - 2400 MHz	+16 dBm	-104 dBm	—	CW carrier	
WA E-UTRA Band 41	2496 – 2690 MHz	+16 dBm	-104 dBm	—	CW carrier	
WA E-UTRA Band 42	3400 – 3600 MHz	+16 dBm	-104 dBm	—	CW carrier	
WA E-UTRA Band 44	703 – 803 MHz	+16 dBm	-104 dBm	—	CW carrier	
Pico GSM850	869 – 894	-7 dBm	-104 dBm	—	CW carrier	
Pico GSM900	921 – 960	-7 dBm	-104 dBm	—	CW carrier	
Pico DCS1800	1805 – 1880	-4 dBm	-104 dBm	—	CW carrier	
LA BS UTRA FDD Band I or E-UTRA Band 1	2110 – 2170	-6 dBm	-104 dBm	—	CW carrier	
LA BS UTRA FDD Band III or E-UTRA Band 3	1805 - 1880 MHz	-6 dBm	-104 dBm	—	CW carrier	For UTRA TDD B operating in Ban 5.2(f), the requirement is FF
LA BS UTRA FDD Band V or E-UTRA Band 5	869 - 894 MHz	-6 dBm	-104 dBm	—	CW carrier	
LA BS UTRA FDD Band VII or	2620 - 2690 MHz	-6 dBm	-104 dBm	—	CW carrier	

E-UTRA Band 7						
LA UTRA TDD Band a) or E-UTRA Band 33	1900 - 1920 MHz	-6 dBm	-104 dBm	—	CW carrier	
LA UTRA TDD Band a) or E-UTRA Band 34	2010 - 2025 MHz	-6 dBm	-104 dBm	—	CW carrier	
LA UTRA TDD Band d) or E-UTRA Band 38	2570 - 2620 MHz	-6 dBm	-104 dBm	—	CW carrier	
LA UTRA TDD Band f) or E-UTRA Band 39	1880 - 1920 MHz	-6 dBm	-104 dBm	—	CW carrier	
LA UTRA TDD Band e) or E-UTRA Band 40	2300 - 2400 MHz	-6 dBm	-104 dBm	—	CW carrier	
LA E-UTRA Band 41	2496 – 2690 MHz	-6 dBm	-104 dBm	—	CW carrier	
LA E-UTRA Band 42	3400 – 3600 MHz	-6 dBm	-104 dBm	—	CW carrier	
LA E-UTRA Band 44	703 – 803 MHz	-6 dBm	-104 dBm	—	CW carrier	

NOTE 1: These requirements do not apply when the interfering signal falls within any of the operating band or in the 10 MHz frequency range immediately outside any of the supported operating band.

NOTE 2: Some combinations of bands may not be possible to co-site based on the requirements above. The current state-of-the-art technology does not allow a single generic solution for co-location of UTRA TDD with UTRA FDD or E-UTRA FDD o adjacent frequencies for 30dB BS-BS minimum coupling loss. However, there are certain site-engineering solutions tha can be used. These techniques are addressed in TR 25.942 [8].

Table 7.4A (e): Void

Table 7.4A (f): Void

7.5.1.3 7,68 Mcps TDD Option

Table 7.4B (d): Additional blocking requirements for operating bands defined in 5.2(a) and 5.2 (d) when co-located with GSM900

System type operating in the same geographic area	Centre Frequency of Interfering Signal	Interfering Signal Mean Power	Wanted Signal Mean Power	Minimum Offset of Interfering Signal	Type of Interfering Signal	
GSM900	921 - 960 MHz	+16 dBm	-103 dBm	—	CW carrier	
DCS1800	1805 -- 1880 MHz	+16 dBm	-103 dBm	—	CW carrier	
WA BS UTRA FDD Band VII or E-UTRA Band 7	2620 - 2690 MHz	+13 dBm	-103 dBm	—	CW carrier	This re does r UTRA operat 5.2(a)
LA BS UTRA FDD Band VII or E-UTRA Band 7	2620 - 2690 MHz	-6 dBm	-103 dBm	—	CW carrier	This re does r UTRA operat 5.2(a)

NOTE 1: These requirements do not apply when the interfering signal falls within the uplink operating band or in the 10 MHz imme outside the uplink operating band.

NOTE 2: Some combinations of bands may not be possible to co-site based on the requirements above. The current state-of-the- technology does not allow a single generic solution for co-location of UTRA TDD with UTRA FDD or E-UTRA FDD on a frequencies for 30dB BS-BS minimum coupling loss. However, there are certain site-engineering solutions that can be u techniques are addressed in TR 25.942 [8].

Table 7.4B (e): Void

7.5.2 Void

7.5.2.1 Void

Table 7.4F: Void

Table 7.4G: Void

7.5.2.2 Void

Table 7.4H: Void

Table 7.4I: Void

7.5.2.3 Void

Table 7.4J: Void

Table 7.4K: Void

7.6 Intermodulation characteristics

Third and higher order mixing of the two interfering RF signals can produce an interfering signal in the band of the desired channel. Intermodulation response rejection is a measure of the capability of the receiver to receiver a wanted signal on its assigned channel frequency in the presence of two or more interfering signals which have a specific frequency relationship to the wanted signal.

7.6.1 Minimum requirement

7.6.1.1 3,84 Mcps TDD Option

The static reference performance as specified in clause 7.2.1 should be met when the following signals are coupled to BS antenna input.

- A wanted signal at the assigned channel frequency, with mean power 6 dB above the static reference level.
- Two interfering signals with the parameters defined in Table 7.5.

Table 7.5: Intermodulation requirement

Interfering Signal Mean Power		Offset	Type of Interfering Signal
Wide Area BS	**Local Area BS**		
- 48 dBm	- 38 dBm	10 MHz	CW signal
- 48 dBm	- 38 dBm	20 MHz	WCDMA signal with one code

7.6.1.2 1,28 Mcps TDD Option

The static reference performance as specified in clause 7.2.1 should be met when the following signals are coupled to BS antenna input.

- A wanted signal at the assigned channel frequency, with mean power 6 dB above the static reference level.
- Two interfering signals with the parameters defined in Table 7.5A.

For BS capable of multi-band operation, the requirement applies in addition inside any inter RF bandwidth gap, in case the gap size is at least 11.2MHz. The CW interfering signal offset is defined relative to lower/upper RF bandwidth edges inside the inter RF bandwidth gap and is equal to -2.4MHz/+2.4MHz, respectively. The modulated interfering signal offset is defined relative to lower/upper RF bandwidth edges inside the inter RF bandwidth gap and is equal to -5.6MHz/+5.6MHz, respectively.

For BS capable of multi-band operation where multiple bands are mapped on separate antenna connectors, the single-band requirements apply regardless of the interfering signals position relative to the inter-RF bandwidth gap.

Table7.5A: Intermodulation requirement

Interfering Signal Mean Power		Offset	Type of Interfering Signal
Wide Area BS	Local Area BS / Home BS		
- 48 dBm	-38 dBm	±3.2 MHz	CW signal
- 48 dBm	-38 dBm	±6.4 MHz	1,28 Mcps TDD Option signal with one code

7.6.1.3 7,68 Mcps TDD Option

The static reference performance as specified in clause 7.2.1 should be met when the following signals are coupled to BS antenna input.

- A wanted signal at the assigned channel frequency, with mean power 6 dB above the static reference level.
- Two interfering signals with the parameters defined in Table 7.5B.

Table 7.5B: Intermodulation requirement

Interfering Signal Mean Power		Offset	Type of Interfering Signal
Wide Area BS	Local Area BS		
- 48 dBm	- 38 dBm	20 MHz	CW signal
- 48 dBm	- 38 dBm	40 MHz	WCDMA signal with one code

7.7 Spurious emissions

The spurious emissions power is the power of emissions generated or amplified in a receiver that appear at the BS antenna connector. The requirements apply to all BS with separate RX and TX antenna port. The test shall be performed when both TX and RX are on with the TX port terminated.

For all BS with common RX and TX antenna port the transmitter spurious emission as specified in section 6.6.3 is valid.

7.7.1 Minimum Requirement

7.7.1.1 3,84 Mcps TDD Option

The power of any spurious emission shall not exceed:

Table 7.6: Receiver spurious emission requirements

Band	Maximum level	Measurement Bandwidth	Note
30 MHz - 1 GHz	-57 dBm	100 kHz	
1 GHz - 1.9 GHz and 1.98 GHz - 2.01 GHz and 2.025 GHz - 2.5 GHz	-47 dBm	1 MHz	With the exception of frequencies between 12.5MHz below the first carrier frequency and 12.5MHz above the last carrier frequency used by the BS.
1.9 GHz - 1.98 GHz and 2.01 GHz - 2.025 GHz and 2.5 GHz - 2.62 GHz	-78 dBm	3.84 MHz	With the exception of frequencies between 12.5MHz below the first carrier frequency and 12.5MHz above the last carrier frequency used by the BS.
2.62 GHz - 12.75 GHz	-47 dBm	1 MHz	With the exception of frequencies between 12.5MHz below the first carrier frequency and 12.5MHz above the last carrier frequency used by the BS.

Table 7.6AA: Additional receiver spurious emission requirements

Band	Maximum level	Measurement Bandwidth	Note
815MHz －850MHz 1749.9MHz －1784.9MHz	-78 dBm	3.84 MHz	Applicable in Japan With the exception of frequencies between 12.5MHz below the first carrier frequency and 12.5MHz above the last carrier frequency used by the BS.

In addition to the requirements in table 7.6 and 7.6AA, the co-existence requirements for co-located base stations specified in subclause 6.6.3.2.2, 6.6.3.3.2 and 6.6.3.4.2 may also be applied.

7.7.1.2 1,28 Mcps TDD Option

The power of any spurious emission shall not exceed the limit defined in Table 7.6A-1.

For BS capable of multi-band operation, where multiple bands are mapped on the same antenna connector, the exclusions and conditions in the Note column of Table 7.6A-1 apply for each supported operating band.

For BS capable of multi-band operation where multiple bands are mapped on separate antenna connectors, the single-band requirements apply and the excluded frequency range is only applicable for the operating band supported on each antenna connector.

Table 7.6A-1: General receiver spurious emission minimum requirements

Band	Maximum level	Measurement Bandwidth	Note
30MHz - 1 GHz	-57 dBm	100 kHz	
1 GHz - 12.75 GHz	-47 dBm	1 MHz	With the exception of frequencies between 4 MHz below the first carrier frequency and 4 MHz above the last carrier frequency used by the BS.

Table 7.6A-2: Void

Table 7.6A-3: Void

In addition to the requirements in Table 7.6A-1, the power of any spurious emission shall not exceed the levels specified for Co-existence with other systems in the same geographical area in subclause 6.6.3.2.1.1 and 6.6.3.5.1.1.2. In addition, the co-existence requirements for co-located base stations specified in subclause 6.6.3.2.2.1 and 6.6.3.5.2.1.2 may also be applied.

7.7.1.3 7,68 Mcps TDD Option

The power of any spurious emission shall not exceed:

Table 7.6B: Receiver spurious emission requirements

Band	Maximum level	Measurement Bandwidth	Note
30 MHz - 1 GHz	-57 dBm	100 kHz	
1 GHz - 1.9 GHz and 1.98 GHz - 2.01 GHz 2.025 GHz - 2.5 GHz	-47 dBm	1 MHz	With the exception of frequencies between 25MHz below the first carrier frequency and 25MHz above the last carrier frequency used by the BS.
1.9 GHz - 1.98 GHz and 2.01 GHz - 2.025 GHz 2.5 GHz - 2.62 GHz	-75 dBm	7.68 MHz	With the exception of frequencies between 25MHz below the first carrier frequency and 25MHz above the last carrier frequency used by the BS.
2.62 GHz - 12.75 GHz	-47 dBm	1 MHz	With the exception of frequencies between 25MHz below the first carrier frequency and 25MHz above the last carrier frequency used by the BS.

Table 7.6BB: Additional receiver spurious emission requirements

Band	Maximum level	Measurement Bandwidth	Note
815MHz - 850MHz 1427.9MHz - 1452.9MHz 1749.9MHz - 1784.9MHz	-78 dBm	3.84 MHz	Applicable in Japan With the exception of frequencies between 25MHz below the first carrier frequency and 25MHz above the last carrier frequency used by the BS.

In addition to the requirements in table 7.6B and 7.6BB, the co-existence requirements for co-located base stations specified in subclause 6.6.3.2.2, 6.6.3.3.2 and 6.6.3.4.2 may also be applied.

8 Performance requirement

8.1 General

Performance requirements for the BS are specified for the measurement channels defined in Annex A and the propagation conditions in Annex B. The requirements only apply to those measurement channels that are supported by the base station.

Unless stated otherwise, performance requirements apply for a single carrier only. Performance requirements for a BS supporting MC-HSUPA are defined in terms of single carrier requirements.

The requirements only apply to a base station with dual receiver antenna diversity unless otherwise stated. The required $\hat{I}_{or}/I_{oc}$ shall be applied separately at each antenna port.

Table 8.1: Summary of Base Station performance targets

Physical channel	Measurement channel	Static	Multi-path Case 1	Multi-path Case 2 **	Multi-path Case 3 **	High speed train* **
		Performance metric				

DCH	12.2 kbps	BLER<10^{-2}	BLER<10^{-2}	BLER<10^{-2}	BLER<10^{-2}	BLER<10^{-2}
	64 kbps	BLER< 10^{-1}, 10^{-2}	BLER< 10^{-1}, 10^{-2}	BLER< 10^{-1}, 10^{-2}	BLER< 10^{-1}, 10^{-2}, 10^{-3}	BLER< 10^{-1}, 10^{-2}
	144 kbps	BLER< 10^{-1}, 10^{-2}	BLER< 10^{-1}, 10^{-2}	BLER< 10^{-1}, 10^{-2}	BLER< 10^{-1}, 10^{-2}, 10^{-3}	-
	384 kbps	BLER< 10^{-1}, 10^{-2}	BLER< 10^{-1}, 10^{-2}	BLER< 10^{-1}, 10^{-2}	BLER< 10^{-1}, 10^{-2}, 10^{-3}	-
*Note: Optional condition, not applicable for all BSs. **Note: Not applicable for Home BS						

8.2 Demodulation in static propagation conditions

8.2.1 Demodulation of DCH

The performance requirement of DCH in static propagation conditions is determined by the maximum Block Error Rate (BLER) allowed when the receiver input signal is at a specified $\hat{I}_{or}/I_{oc}$ limit. The BLER is calculated for each of the measurement channels supported by the base station.

8.2.1.1 Minimum requirement

8.2.1.1.1 3,84 Mcps TDD Option

For the parameters specified in Table 8.2 the BLER should not exceed the piece-wise linear BLER curve specified in Table 8.3. These requirements are applicable for TFCS size 16.

Table 8.2: Parameters in static propagation conditions

Parameters		Unit	Test 1	Test 2	Test 3	Test 4
Number of DPCH$_o$			6	4	0	0
$\frac{DPCH_o\_E_c}{I_{or}}$		dB	-9	-9.5	0	0
I_{oc}	Wide Area BS	dBm/3.84 MHz	-89			
	Local Area BS	dBm/3.84 MHz	-74			
Cell Parameter*			0,1			
DPCH Channelization Codes*		C(k,Q)	C(1,8)	C(1,4) C(5,16)	C(1,2) C(9,16)	C(1,2)
DPCH$_o$ Channelization Codes*		C(k,Q)	C(i,16) 3≤ i ≤8	C(i,16) 6≤ i ≤9	-	-
Information Data Rate		kbps	12.2	64	144	384
*Note: Refer to TS 25.223 for definition of channelization codes and cell parameter.						

Table 8.3: Performance requirements in AWGN channel.

Test Number	$\frac{\hat{I}_{or}}{I_{oc}}$ [dB]	BLER
1	-2.0	10^{-2}
2	-0.4	10^{-1}
	-0.1	10^{-2}
3	-0.2	10^{-1}
	0.1	10^{-2}
4	-0.8	10^{-1}
	-0.6	10^{-2}

8.2.1.1.2 1,28 Mcps TDD Option

For the parameters specified in Table8.2A the BLER should not exceed the piece-wise linear BLER curve specified in Table8.3A. These requirements are applicable for TFCS size 16.

Table 8.2A: Parameters in static propagation conditions

Parameters		Unit	Test 1	Test 2	Test 3	Test 4
Number of $DPCH_o$			4	1	1	0
Spread factor of $DPCH_o$			8	8	8	-
Scrambling code and basic midamble code number*			0	0	0	0
DPCH Channelization Codes*		C(k,Q)	C(1,8)	C(1,2)	C(1,2)	C(1,2) C(9,16)
$DPCH_o$ Channelization Codes*		C(k,Q)	C(i,8) 2≤ i ≤5	C(5,8)	C(5,8)	-
$\frac{DPCH_o\_E_c}{I_{or}}$		dB	-7	-7	-7	0
I_{oc}	Wide Area BS	dBm/ 1.28MHz	-91			
	Local Area BS	dBm/ 1.28MHz	-77			
	Home BS	dBm/ 1.28MHz	-82			
Information Data Rate		Kbps	12.2	64	144	384
*Note: Refer to TS 25.223 for definition of channelization codes, scrambling code and basic midamble code.						

Table 8.3A: Performance requirements in AWGN channel.

Test Number	$\frac{\hat{I}_{or}}{I_{oc}}$ [dB]	BLER
1	0.5	10^{-2}
2	-1.1	10^{-1}
	-0.7	10^{-2}
3	-0.5	10^{-1}
	-0.3	10^{-2}
4	0.6	10^{-1}
	0.8	10^{-2}

8.2.1.1.3 7,68 Mcps TDD Option

For the parameters specified in Table 8.2B the BLER should not exceed the piece-wise linear BLER curve specified in Table 8.3B. These requirements are applicable for TFCS size 16.

Table 8.2B: Parameters in static propagation conditions

Parameters		Unit	Test 1
Number of $DPCH_o$			14
$\frac{DPCH_o\_E_c}{I_{or}}$		dB	-12
I_{oc}	Wide Area BS	dBm/7.68 MHz	-89
	Local Area BS	dBm/7.68 MHz	-74
Cell Parameter*			0,1
DPCH Channelization Codes*		C(k,Q)	C(1, 16)
$DPCH_o$ Channelization Codes*		C(k,Q)	C(i, 32) 3≤ i ≤16
Information Data Rate		kbps	12.2
*Note: Refer to TS 25.223 for definition of channelization codes and cell parameter.			

Table 8.3B: Performance requirements in AWGN channel.

Test Number	$\frac{\hat{I}_{or}}{I_{oc}}$ [dB]	BLER
1	-2.0	10^{-2}

8.3 Demodulation of DCH in multipath fading conditions

8.3.1 Multipath fading Case 1

The performance requirement of DCH in multipath fading Case 1 is determined by the maximum Block Error Rate (BLER) allowed when the receiver input signal is at a specified $\hat{I}_{or}/I_{oc}$ limit. The BLER is calculated for each of the measurement channels supported by the base station.

8.3.1.1 Minimum requirement

8.3.1.1.1 3,84 Mcps TDD Option

For the parameters specified in Table 8.4 the BLER should not exceed the piece-wise linear BLER curve specified in Table 8.5. These requirements are applicable for TFCS size 16.

Table 8.4: Parameters in multipath Case 1 channel

Parameters		Unit	Test 1	Test 2	Test 3	Test 4
Number of $DPCH_o$			6	4	0	0
$\frac{DPCH_o\_E_c}{I_{or}}$		dB	-9	-9.5	0	0
I_{oc}	Wide Area BS	dBm/3.84 MHz	-89			
	Local Area BS	dBm/3.84 MHz	-74			
Cell Parameter*			0,1			
DPCH Channelization Codes*		C(k,Q)	C(1,8)	C(1,4) C(5,16)	C(1,2) C(9,16)	C(1,2)
$DPCH_o$ Channelization Codes*		C(k,Q)	C(i,16) 3≤ i ≤8	C(i,16) 6≤ i ≤9	-	-
Information Data Rate		kbps	12.2	64	144	384
*Note: Refer to TS 25.223 for definition of channelization codes and cell parameter.						

Table 8.5: Performance requirements in multipath Case 1 channel.

Test Number	$\frac{\hat{I}_{or}}{I_{oc}}$ [dB]	BLER
1	6.5	10^{-2}
2	5.5	10^{-1}
	9.8	10^{-2}
3	5.5	10^{-1}
	9.8	10^{-2}
4	5.1	10^{-1}
	9.5	10^{-2}

8.3.1.1.2 1,28 Mcps TDD Option

For the parameters specified in Table 8.4A the BLER should not exceed the piece-wise linear BLER curve specified in Table 8.5A .These requirements are applicable for TFCS size 16.

Table 8.4A: Parameters in multipath Case 1 channel

Parameters		Unit	Test 1	Test 2	Test 3	Test 4
Number of DPCH$_o$			4	1	1	0
Spread factor of DPCH$_o$			8	8	8	-
Scrambling code and basic midamble code number*			0	0	0	0
DPCH Channelization Codes*		C(k,Q)	C(1,8)	C(1,2)	C(1,2)	C(1,2) C(9,16)
DPCH$_o$ Channelization Codes*		C(k,Q)	C(i,8) 2≤ i ≤5	C(5,8)	C(5,8)	-
$\frac{DPCH_o\_E_c}{I_{or}}$		dB	-7	-7	-7	0
I_{oc}	Wide Area BS	dBm/1.28 MHz	-91			
	Local Area BS	dBm/1.28 MHz	-77			
	Home BS	dBm/1.28 MHz	-82			
Information Data Rate		Kbps	12.2	64	144	384
*Note: Refer to TS 25.223 for definition of channelization codes, scrambling code and basic midamble code.						

Table 8.5A: Performance requirements in multipath Case 1 channel.

Test Number	$\frac{\hat{I}_{or}}{I_{oc}}$ [dB]	BLER
1	10.7	10^{-2}
2	5.3	10^{-1}
	9.6	10^{-2}
3	5.7	10^{-1}
	10.3	10^{-2}
4	6.8	10^{-1}
	10.9	10^{-2}

8.3.1.1.3 7,68 Mcps TDD Option

For the parameters specified in Table 8.4B the BLER should not exceed the piece-wise linear BLER curve specified in Table 8.5B. These requirements are applicable for TFCS size 16.

Table 8.4B: Parameters in multipath Case 1 channel

Parameters		Unit	Test 1
Number of DPCH$_o$			14
$\frac{DPCH_o\_E_c}{I_{or}}$		dB	-12
I_{oc}	Wide Area BS	dBm/7.68 MHz	-89
	Local Area BS	dBm/7.68 MHz	-74
Cell Parameter*			0,1
DPCH Channelization Codes*		C(k,Q)	C(1, 16)
DPCH$_o$ Channelization Codes*		C(k,Q)	C(i, 32) 3≤ i ≤16
Information Data Rate		kbps	12.2
*Note: Refer to TS 25.223 for definition of channelization codes and cell parameter.			

Table 8.5B: Performance requirements in multipath Case 1 channel.

Test Number	$\frac{\hat{I}_{or}}{I_{oc}}$ [dB]	BLER
1	6.5	10^{-2}

8.3.2 Multipath fading Case 2

The performance requirement of DCH in multipath fading Case 2 is determined by the maximum Block Error Rate (BLER) allowed when the receiver input signal is at a specified $\hat{I}_{or}/I_{oc}$ limit. The BLER is calculated for each of the measurement channels supported by the base station.

This requirement shall not be applied to the Local Area BS and Home BS.

8.3.2.1 Minimum requirement

8.3.2.1.1 3,84 Mcps TDD Option

For the parameters specified in Table 8.6 the BLER should not exceed the piece-wise linear BLER curve specified in Table 8.7. These requirements are applicable for TFCS size 16.

Table 8.6: Parameters in multipath Case 2 channel

Parameters	Unit	Test 1	Test 2	Test 3	Test 4
Number of $DPCH_o$		2	0	0	0
$\frac{DPCH_o\_E_c}{I_{or}}$	dB	-6	0	0	0
I_{oc}	dBm/3.84 MHz	-89			
Cell Parameter*		0,1			
DPCH Channelization Codes*	C(k,Q)	C(1,8)	C(1,4) C(5,16)	C(1,2) C(9,16)	C(1,2)
$DPCH_o$ Channelization Codes*	C(k,Q)	C(i,16) 3≤ i ≤4	-	-	-
Information Data Rate	kbps	12.2	64	144	384
*Note: Refer to TS 25.223 for definition of channelization codes and cell parameter.					

Table 8.7: Performance requirements in multipath Case 2 channel.

Test Number	$\frac{\hat{I}_{or}}{I_{oc}}$ [dB]	BLER
1	-0.4	10^{-2}
2	0.2	10^{-1}
	2.5	10^{-2}
3	3.6	10^{-1}
	6.0	10^{-2}
4	2.8	10^{-1}
	5.2	10^{-2}

8.3.2.1.2 1,28 Mcps TDD Option

For the parameters specified in Table 8.6A the BLER should not exceed the piece-wise linear BLER curve specified in Table 8.7A. These requirements are applicable for TFCS size 16.

Table 8.6A: Parameters in multipath Case 2 channel

Parameters	Unit	Test 1	Test 2	Test 3	Test 4
Number of DPCH$_o$		4	1	1	0
Spread factor of DPCH$_o$		8	8	8	-
Scrambling code and basic midamble code number*		0	0	0	0
DPCH Channelization Codes*	C(k,Q)	C(1,8)	C(1,2)	C(1,2)	C(1,2) C(9,16)
DPCH$_o$ Channelization Codes*	C(k,Q)	C(i,8) 2≤ i ≤5	C(5,8)	C(5,8)	-
$\frac{DPCH_o\_E_c}{I_{or}}$	dB	-7	-7	-7	0
I$_{oc}$	dBm/1.28 MHz	-91			
Information Data Rate	Kbps	12.2	64	144	384
*Note: Refer to TS 25.223 for definition of channelization codes, scrambling code and basic midamble code.					

Table 8.7A: Performance requirements in multipath Case 2 channel.

Test Number	$\frac{\hat{I}_{or}}{I_{oc}}$ [dB]	BLER
1	6.7	10^{-2}
2	3.5	10^{-1}
	5.9	10^{-2}
3	4.0	10^{-1}
	6.4	10^{-2}
4	4.8	10^{-1}
	7.1	10^{-2}

8.3.2.1.3 7,68 Mcps TDD Option

For the parameters specified in Table 8.6B the BLER should not exceed the piece-wise linear BLER curve specified in Table 8.7B. These requirements are applicable for TFCS size 16.

Table 8.6B: Parameters in multipath Case 2 channel

Parameters	Unit	Test 1
Number of DPCH$_o$		6
$\frac{DPCH_o\_E_c}{I_{or}}$	dB	-9
I$_{oc}$	dBm/7.68 MHz	-89
Cell Parameter*		0,1
DPCH Channelization Codes*	C(k,Q)	C(1, 16)
DPCH$_o$ Channelization Codes*	C(k,Q)	C(i, 32) 3≤ i ≤8
Information Data Rate	kbps	12.2
*Note: Refer to TS 25.223 for definition of channelization codes and cell parameter.		

Table 8.7B: Performance requirements in multipath Case 2 channel.

Test Number	$\frac{\hat{I}_{or}}{I_{oc}}$ [dB]	BLER
1	1	10^{-2}

8.3.3 Multipath fading Case 3

The performance requirement of DCH in multipath fading Case 3 is determined by the maximum Block Error Rate (BLER) allowed when the receiver input signal is at a specified $\hat{I}_{or}/I_{oc}$ limit. The BLER is calculated for each of the measurement channels supported by the base station.

This requirement shall not be applied to the Local Area BS and Home BS.

8.3.3.1 Minimum requirement

8.3.3.1.1 3,84 Mcps TDD Option

For the parameters specified in Table 8.8 the BLER should not exceed the piece-wise linear BLER curve specified in Table 8.9. These requirements are applicable for TFCS size 16.

Table 8.8: Parameters in multipath Case 3 channel

Parameters	Unit	Test 1	Test 2	Test 3	Test 4
Number of $DPCH_o$		2	0	0	0
$\frac{DPCH_o\_E_c}{I_{or}}$	dB	-6	0	0	0
I_{oc}	dBm/3.84 MHz	-89			
Cell Parameter*		0,1			
DPCH Channelization Codes*	C(k,Q)	C(1,8)	C(1,4) C(5,16)	C(1,2) C(9,16)	C(1,2)
$DPCH_o$ Channelization Codes*	C(k,Q)	C(i,16) 3≤ i ≤4	-	-	-
Information Data Rate	Kbps	12.2	64	144	384
*Note: Refer to TS 25.223 for definition of channelization codes and cell parameter.					

Table 8.9: Performance requirements in multipath Case 3 channel.

Test Number	$\frac{\hat{I}_{or}}{I_{oc}}$ [dB]	BLER
1	-0.1	10^{-2}
2	0.8	10^{-1}
	2.7	10^{-2}
	4.2	10^{-3}
3	4.5	10^{-1}
	6.3	10^{-2}
	8.0	10^{-3}
4	3.6	10^{-1}
	5.0	10^{-2}
	6.3	10^{-3}

8.3.3.1.2 1,28 Mcps TDD Option

For the parameters specified in Table 8.8A the BLER should not exceed the piece-wise linear BLER curve specified in Table 8.9A. These requirements are applicable for TFCS size 16.

Table 8.8A: Parameters in multipath Case 3 channel

Parameters	Unit	Test 1	Test 2	Test 3	Test 4
Number of $DPCH_o$		4	1	1	0
Spread factor of $DPCH_o$		8	8	8	-
Scrambling code and basic midamble code number*		0	0	0	0
DPCH Channelization Codes*	C(k,Q)	C(1,8)	C(1,2)	C(1,2)	C(1,2) C(9,16)
$DPCH_o$ Channelization Codes*	C(k,Q)	C(i,8) 2≤ i ≤5	C(5,8)	C(5,8)	-
$\frac{DPCH_o\_E_c}{I_{or}}$	dB	-7	-7	-7	0
I_{oc}	dBm/1.28 MHz	-91			
Information Data Rate	Kbps	12.2	64	144	384
*Note: Refer to TS 25.223 for definition of channelization codes, scrambling code and basic midamble code.					

Table 8.9A: Performance requirements in multipath Case 3 channel.

Test Number	$\frac{\hat{I}_{or}}{I_{oc}}$ [dB]	BLER
1	5.9	10^{-2}
2	3.2	10^{-1}
	4.8	10^{-2}
	6.1	10^{-3}
3	3.7	10^{-1}
	5.0	10^{-2}
	6.1	10^{-3}
4	3.9	10^{-1}
	4.8	10^{-2}
	5.7	10^{-3}

8.3.3.1.3 7,68 Mcps TDD Option

For the parameters specified in Table 8.8B the BLER should not exceed the piece-wise linear BLER curve specified in Table 8.9B. These requirements are applicable for TFCS size 16.

Table 8.8B: Parameters in multipath Case 3 channel

Parameters	Unit	Test 1
Number of $DPCH_o$		6
$\frac{DPCH_o\_E_c}{I_{or}}$	dB	-9
I_{oc}	dBm/7.68 MHz	-89
Cell Parameter*		0,1
DPCH Channelization Codes*	C(k,Q)	C(1, 16)
$DPCH_o$ Channelization Codes*	C(k,Q)	C(i, 32) 3≤ i ≤8
Information Data Rate	kbps	12.2
NOTE *: Refer to TS 25.223 for definition of channelization codes and cell parameter.		

Table 8.9B: Performance requirements in multipath Case 3 channel.

Test Number	$\frac{\hat{I}_{or}}{I_{oc}}$ [dB]	BLER
1	-0.1	10^{-2}

8.3A Demodulation of DCH in High speed train conditions

8.3A.1 General

The performance requirement of DCH in high speed train conditions is determined by the maximum BLER allowed when the receiver input signal is at a specified $\hat{I}_{or}/I_{oc}$ limit. The BLER is calculated for the measurement channel supported by the base station.

This requirement shall only be applied to BS supporting high speed mode.

8.3A.2 Minimum requirement

8.3A.2.1 3,84 Mcps TDD Option

(void)

8.3A.2.2 1.28 Mcps TDD Option

For the parameters specified in Table 8.9C the BLER shall not exceed the BLER requirement specified in Table 8.9D. These requirements are applicable for TFCS size 16.

Table 8.9C: DCH parameters in high speed train condition

Parameters	Unit	Test 1	Test 2
Number of DPCHo		4	1
Spread factor of DPCH$_0$		8	8
Scrambling code and basic midamble code number*		0	0
DPCH Channelization Codes*	C(k,Q)	C(1,8)	C(1,2)
DPCHo Channelization Codes*	C(k,Q)	C(i,8) 2≤ i ≤5	C(5,8)
$\frac{DPCH_o\_E_c}{I_{or}}$	dB	-7	-7
Ioc	dBm/1.28MHz	-91	
Information Data Rate	Kbps	12.2	64
*Note: Refer to TS 25.223 for definition of channelization codes and cell parameter.			

Table 8.9D: DCH requirements in high speed train condition

Test number	Scenario	dual receiver antenna diversity	$\frac{\hat{I}_{or}}{I_{oc}}$ [dB]	BLER
1	1	On	4.0	10^{-2}
		Off *	7.5	10^{-2}
	3	Off *	7.7	10^{-2}
2	1	On	1.2	10^{-1}
		on	2.0	10^{-2}
		Off *	4.6	10^{-1}
		Off *	5.4	10^{-2}
	3	Off *	4.8	10^{-1}
		Off *	6.0	10^{-2}
***Note:** The requirement is only applicable for BS without receiver antenna diversity, the required $\frac{\hat{I}_{or}}{I_{oc}}$ shall be applied at the BS Rx antenna port.				

8.3A.2.3 7.68 Mcps TDD Option

(void)

8.4 Demodulation of E-DCH FRC in multipath fading conditions

8.4.1 Minimum requirement

8.4.1.1 3.84 Mcps TDD Option

The performance requirement of the E-DCH in multi path fading condition is determined by the minimum throughput, R. For the test parameters specified in Table 8.10, the minimum requirements are specified in Table 8.11.

Table 8.10: Test parameters for testing E-DCH (3.84 Mcps TDD Option)

Parameter		Unit	Value		
			FRC1	**FRC2**	**FRC3**
Max information rate		kbps	34.7	1083.1	2073.7
I_{oc}	Wide Area BS	dBm/3.84 MHz	-89		
	Local Area BS	dBm/3.84 MHz	-74		
E-DCH_E_c/I_{or}		dB	0	0	0
Cell Parameter*			0, 1		
E-DCH channelization code*		C(k, Q)	C(1, 16)	C(1, 2)	C(1, 1)
RSN			{0, 1, 2, 3}		
HARQ combining			IR		
Maximum number of HARQ transmission			4		
Power control			OFF		
Receiver antenna diversity			ON		
Midamble			Default midamble		
Physical channels to be turned on			E-PUCH		
Propagation condition			PA3, PB3, VA30, VA120		
NOTE *: Refer to TS 25.223 for definition of channelization codes and cell parameter.					

Table 8.11 Minimum Requirement for E-DCH (3.84 Mcps TDD Option)

Fixed Reference Channel		Reference value, $\hat{I}_{or}/I_{oc}$ (dB), for R ≥ 30% and R ≥ 70% of maximum information bit rate		
Propagation conditions		**FRC1**	**FRC2**	**FRC3**
Pedestrian A (3 kmph)	30%	-13.76	-0.55	4.94
	70%	-9.89	5.2	12.76
Pedestrian B (3 kmph)	30%	-12.12	0.48	5.13
	70%	-9.46	5.22	13.1
Vehicular A (30 kmph)	30%	-12.58	-0.62	5.14
	70%	-9.51	5.3	13.46
Vehicular A (120 kmph)	30%	-12.55	-0.69	5.1
	70%	-9.78	5.22	13.14

8.4.1.2 1.28 Mcps TDD Option

The performance requirement of the E-DCH in multi path fading condition is determined by the minimum throughput, R. For the test parameters specified in Table 8.12, the minimum requirements are specified in Table 8.13. For a BS supporting MC-HSUPA the requirements shall apply on each carrier.

Table 8.12: Test parameters for testing E-DCH (1.28 Mcps TDD Option)

Parameter		Unit	Value			
			FRC1	**FRC2**	**FRC3**	**FRC4**
Max information rate		kbps	56.4	227.8	515.6	1281.2
I_{oc}	Wide Area BS	dBm/1.28 MHz	-91			
	Local Area BS	dBm/1.28MHz	-77			
	Home BS	dBm/1.28MHz	-82			
Scrambling code and basic midamble code number*			0	0	0	0

E-PUCH channelization code*	C(k, Q)	C(1, 4)	C(1, 2)	C(1,2)	C(1,1)
RSN		{0, 1, 2, 3}			
HARQ combining		IR			
Maximum number of HARQ transmission		4			
Power control		OFF			
Receiver antenna diversity		ON			
Midamble		Default midamble			
Propagation condition		PA3, PB3, VA30			
*Note: Refer to TS 25.223 for definition of channelization codes, scrambling code and basic midamble code					

Table 8.13 Minimum Requirement for E-DCH (1.28 Mcps TDD Option)

Fixed Reference Channel		**Reference value, $\hat{I}_{or}/I_{oc}$ (dB), for R ≥ 30% and R ≥ 70% of maximum information bit rate**			
Propagation conditions		**FRC1**	**FRC2**	**FRC3**	**FRC4**
Pedestrian A (3 kmph)	30%	-6.78	-1.58	2.84	6.34
	70%	-1.83	4.6	10.19	13.45
Pedestrian B (3 kmph)	30%	-5.62	-1.1	2.88	6.55
	70%	-1.65	5.09	8.99	12.26
Vehicular A (30 kmph)	30%	-4.96	-0.88	3.09	7.14
	70%	-1.2	6.0	10.89	14.01

8.4.1.3 7.68 Mcps TDD Option

The performance requirement of the E-DCH in multi path fading condition is determined by the minimum throughput, R. For the test parameters specified in Table 8.14, the minimum requirements are specified in Table 8.15.

Table 8.14: Test parameters for testing E-DCH (7.68 Mcps TDD Option)

Parameter		**Unit**	**Value**		
			FRC1	**FRC2**	**FRC3**
Max information rate		kbps	35.9	1083.1	2085.1
I_{oc}	Wide Area BS	dBm/7.68 MHz	-89		
	Local Area BS	dBm/7.68 MHz	-74		
E-DCH_E_c/I_{or}		dB	0	0	0
Cell Parameter*			0, 1		
E-DCH channelization code*		C(k, Q)	C(1, 32)	C(1, 4)	C(1, 2)
RSN			{0, 1, 2, 3}		
HARQ combining			IR		
Maximum number of HARQ transmission			4		
Power control			OFF		
Receiver antenna diversity			ON		
Midamble			Default midamble		
Physical channels to be turned on			E-PUCH		
Propagation condition			PA3, PB3, VA30, VA120		
NOTE *: Refer to TS 25.223 for definition of channelization codes and cell parameter.					

Table 8.15 Minimum Requirement for E-DCH (7.68 Mcps TDD Option)

Fixed Reference Channel		**Reference value, $\hat{I}_{or}/I_{oc}$ (dB), for R ≥ 30% and R ≥ 70% of maximum information bit rate**		
Propagation conditions		**FRC1**	**FRC2**	**FRC3**
Pedestrian A (3 kmph)	30%	-16.22	-3.71	1.72
	70%	-12.56	1.79	9.39
Pedestrian B (3 kmph)	30%	-14.44	-3.71	1.45
	70%	-11.54	1.48	8.87
Vehicular A (30 kmph)	30%	-14.81	-3.68	1.48
	70%	-11.84	1.89	9.28
Vehicular A (120 kmph)	30%	-14.81	-3.83	1.38
	70%	-12.27	1.67	9.17

8.5 Performance of ACK detection for HS-SICH

8.5.1 Minimum requirement

8.5.1.1 3.84 Mcps TDD Option

(void)

8.5.1.2 1.28 Mcps TDD Option

The performance requirement of the HS-SICH type 1is ACK error detection, P(ACK->NACK). Performance requirements are specified for the reference measurement channel of HS-SICH type 1 and four propagation conditions: static, multi-path fading case 1, case2 and case3. The reference measurement channel for HS-SICH type 1 is defined in Annex A.4. The propagation conditions are defined in Annex B.2.1.

For the test parameters specified in Table 8.17A, the minimum requirements are specified in Table 8.18A.

Table 8.17A: Test parameters for testing ACK error detection using HS-SICH type1 (1.28Mcps TDD Option)

Parameters		Unit	Test
Number of $DPCH_o$			2
Spread factor of $DPCH_o$			8
Scrambling code and basic midamble code number (note)			0
$DPCH_o$ Channelization Codes*		C(k,Q)	C(i,8) 2≤ i ≤3
$\frac{DPCH_o\_E_c}{I_{or}}$		dB	-4
$\frac{\text{HS-SICH}\_E_c}{I_{or}}$		dB	-7
I_{oc}	Wide Area BS	dBm/1.28 MHz	-91
	Home BS		-82
Closed loop power control			Off
Midamble			Default midamble
Propagation condition			Static, case1, case2 and case3
NOTE: Refer to TS 25.223 for definition of channelizationcodes and cell parameter.			

Table 8.18A Minimum Requirement for ACK error detection using HS-SICH type1 (1.28Mcps TDD Option)

Propagation condition	$\frac{\hat{I}_{or}}{I_{oc}}$ [dB]	Required error ratio
Static	-3.1	$< 10^{-2}$
Case 1	1.2	$< 10^{-2}$
Case 2*	0.9	$< 10^{-2}$
Case 3*	0.2	$< 10^{-2}$
*Note: This case is not applicable to Home BS		

The performance requirement of the HS-SICH type2 is ACK error detection, P(ACK->NACK). Performance requirements are specified for the reference measurement channel of HS-SICH type2 and three propagation conditions: static, multi-path fading case 1, and case2. The reference measurement channel for HS-SICH type2 is defined in Annex A.4. The propagation conditions are defined in Annex B.2.1.

For the test parameters specified in Table 8.19A, the minimum requirements are specified in Table 8.20A.

Table 8.19A: Test parameters for testing ACK error detection using HS-SICH type2 (1.28Mcps TDD Option)

Parameters	Unit	Test
Number of $DPCH_o$		2
Spread factor of $DPCH_o$		8
Scrambling code and basic midamble code number (note)		0
$DPCH_o$ Channelization Codes*	C(k,Q)	C(i,8) 2≤ i ≤3
$\frac{DPCH_o\_E_c}{I_{or}}$	dB	-4.8
$\frac{\text{HS-SICH}\_E_c}{I_{or}}$	dB	-4.8
I_{oc} Wide Area BS	dBm/1.28 MHz	-91
I_{oc} Home BS		-82
Closed loop power control		Off
Midamble		Default midamble
Propagation condition		Static, case1, and case2
NOTE: Refer to TS 25.223 for definition of channelizationcodes and cell parameter.		

Table 8.20A Minimum Requirement for ACK error detection using HS-SICH type2 (1.28Mcps TDD Option)

Propagation condition	$\frac{\hat{I}_{or}}{I_{oc}}$ [dB]	Required error ratio
Static	-5.3	$< 10^{-2}$
Case 1	-1.2	$< 10^{-2}$
Case 2*	-0.7	$< 10^{-2}$
*Note: This case is not applicable to Home BS		

Annex A (normative): Measurement Channels

A.1 (void)

A.2 Reference measurement channel

A.2.1 UL reference measurement channel (12.2 kbps)

A.2.1.1 3,84 Mcps TDD Option

Table A.1

Parameter	Value
Information data rate	12.2 kbps
RU´s allocated	2 RU
Midamble	512 chips
Interleaving	20 ms
Power control	2 Bit/user
TFCI	16 Bit/user
Inband signalling DCCH	2 kbps
Puncturing level at Code rate 1/3 : DCH of the DTCH / DCH of the DCCH	10% / 0%

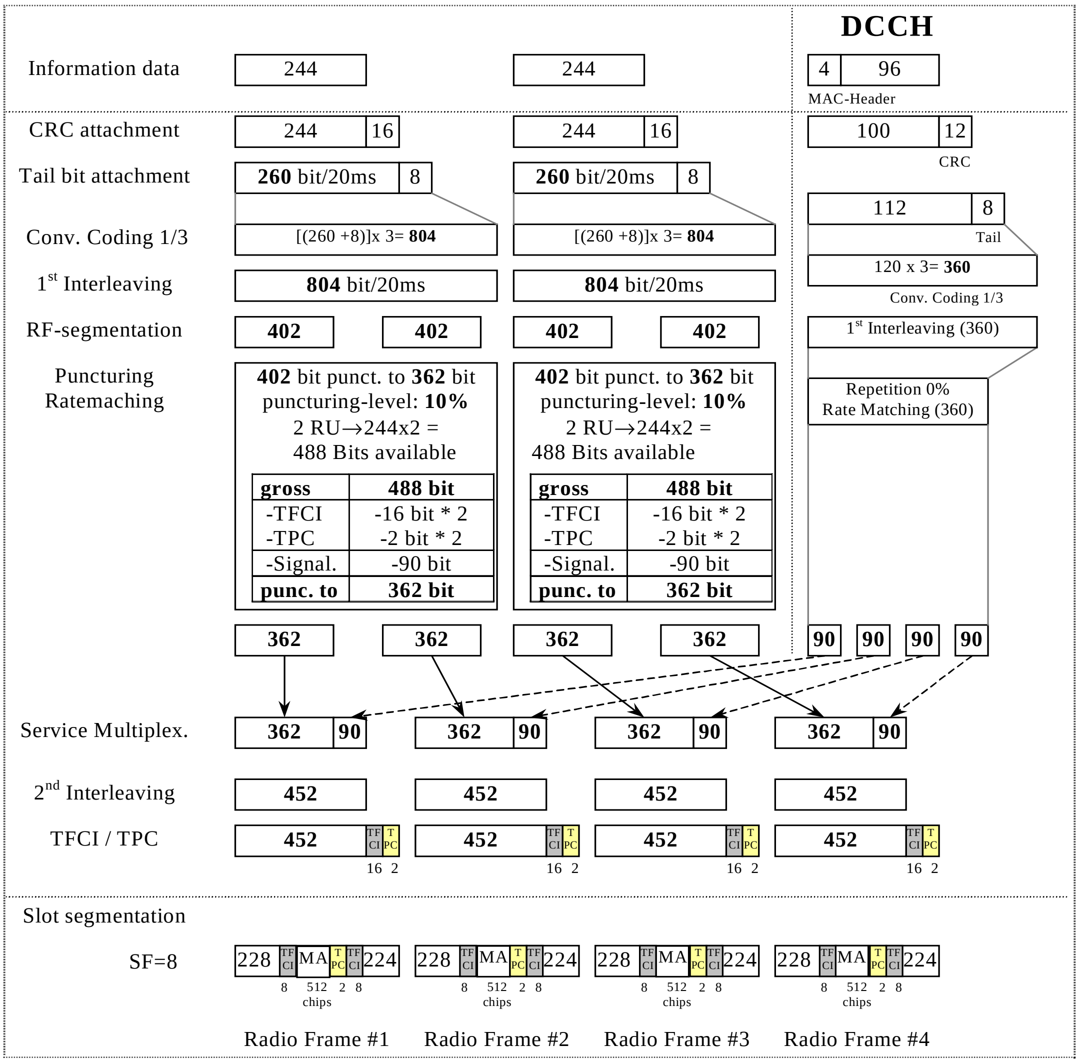
DCCH
Information data
244
244
4
96
MAC-Header
CRC attachment
244
16
244
16
100
12
CRC
Tail bit attachment
260 bit/20ms
8
260 bit/20ms
8
112
8
Tail
Conv. Coding 1/3
[(260 +8)]x 3= 804
[(260 +8)]x 3= 804
120 x 3= 360
Conv. Coding 1/3
1st Interleaving
804 bit/20ms
804 bit/20ms
1st Interleaving (360)
RF-segmentation
402
402
402
402
Puncturing Ratemaching
402 bit punct. to 362 bit puncturing-level: 10% 2 RU→244x2 = 488 Bits available
402 bit punct. to 362 bit puncturing-level: 10% 2 RU→244x2 = 488 Bits available
Repetition 0% Rate Matching (360)
gross 488 bit
-TFCI -16 bit * 2
-TPC -2 bit * 2
-Signal. -90 bit
punc. to 362 bit
gross 488 bit
-TFCI -16 bit * 2
-TPC -2 bit * 2
-Signal. -90 bit
punc. to 362 bit
362
362
362
362
90
90
90
90
Service Multiplex.
362 90
362 90
362 90
362 90
2nd Interleaving
452
452
452
452
TFCI / TPC
452 TFCI TPC
16 2
452 TFCI TPC
16 2
452 TFCI TPC
16 2
452 TFCI TPC
16 2
Slot segmentation
SF=8
228 TFCI MA TPC TFCI 224
8 512 chips 2 8
228 TFCI MA TPC TFCI 224
8 512 chips 2 8
228 TFCI MA TPC TFCI 224
8 512 chips 2 8
228 TFCI MA TPC TFCI 224
8 512 chips 2 8
Radio Frame #1
Radio Frame #2
Radio Frame #3
Radio Frame #4

Figure A.1

A.2.1.2 1,28 Mcps TDD Option

Table A.1A

Parameter	Value
Information data rate	12.2 kbps
RU's allocated	1TS (1*SF8) = 2RU/5ms
Midamble	144
Interleaving	20 ms
Power control (TPC)	4 Bit/user/10ms
TFCI	16 Bit/user/10ms
Synchronisation Shift (SS)	4 Bit/user/10ms
Inband signalling DCCH	2.4 kbps
Puncturing level at Code rate 1/3: DCH of the DTCH / DCH of the DCCH	33% / 33%

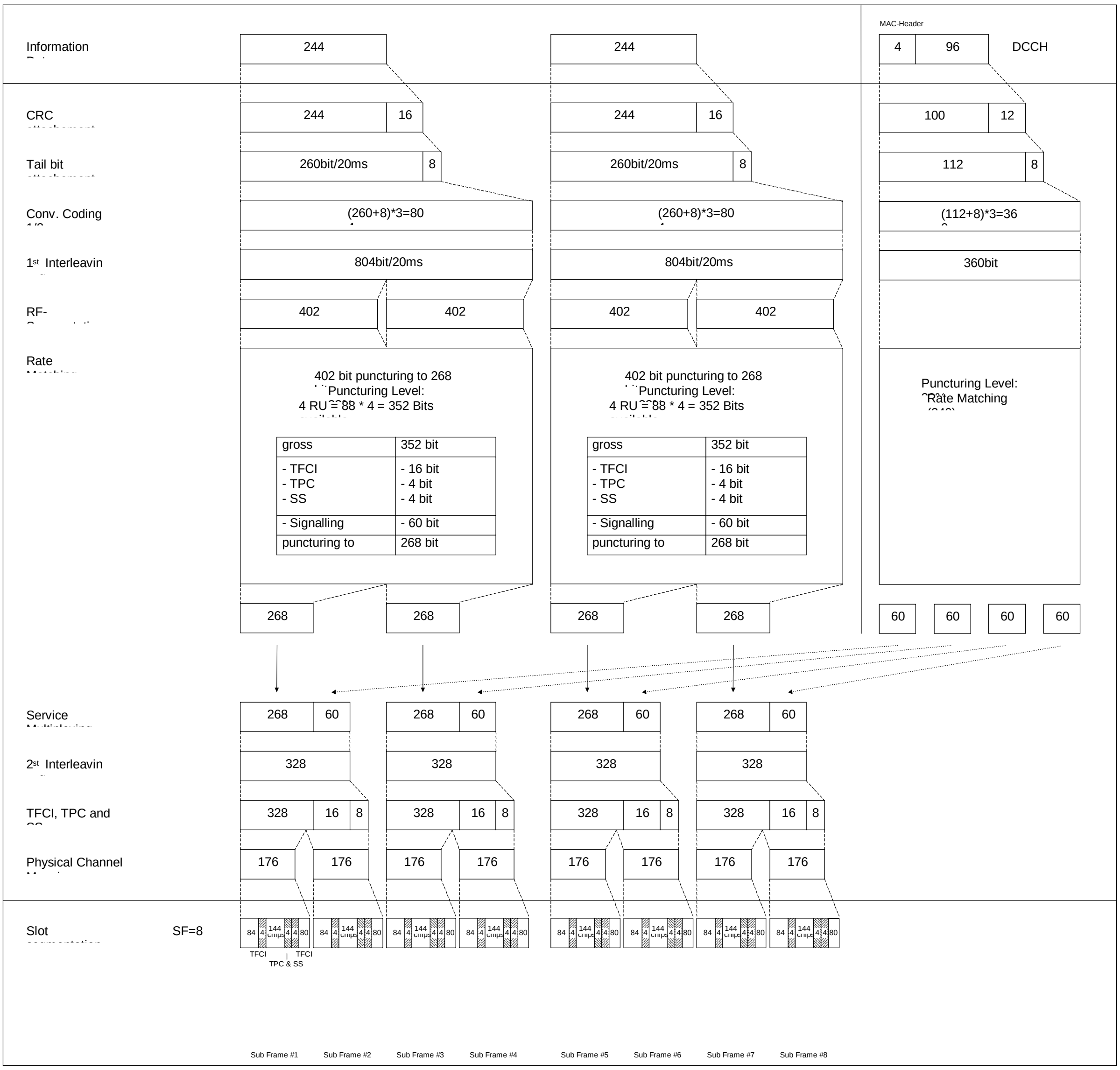
Information
MAC-Header
244
244
4
96
DCCH
CRC
16
100
12
Tail bit
260bit/20ms
8
112
Conv. Coding
(260+8)*3=80
(112+8)*3=36
1st Interleavin
804bit/20ms
360bit
RF-
402
Rate
402 bit puncturing to 268
Puncturing Level:
4 RU ≅ 88 * 4 = 352 Bits
gross
352 bit
- TFCI
- TPC
- SS
- 16 bit
- 4 bit
- 4 bit
- Signalling
- 60 bit
puncturing to
268 bit
Puncturing Level:
Rate Matching
268
60
Service
2st Interleavin
328
TFCI, TPC and
Physical Channel
176
Slot
SF=8
84
4
144 chips
80
TFCI
TPC & SS
Sub Frame #1
Sub Frame #2
Sub Frame #3
Sub Frame #4
Sub Frame #5
Sub Frame #6
Sub Frame #7
Sub Frame #8

Figure A.1A

A.2.1.3 7,68 Mcps TDD Option

Table A.1B

Parameter	Value
Information data rate	12.2 kbps
RU´s allocated	2 RU
Midamble	1024 chips
Interleaving	20 ms
Power control	2 Bit/user
TFCI	16 Bit/user
Inband signalling DCCH	2 kbps
Puncturing level at Code rate 1/3 : DCH of the DTCH / DCH of the DCCH	10% / 0%

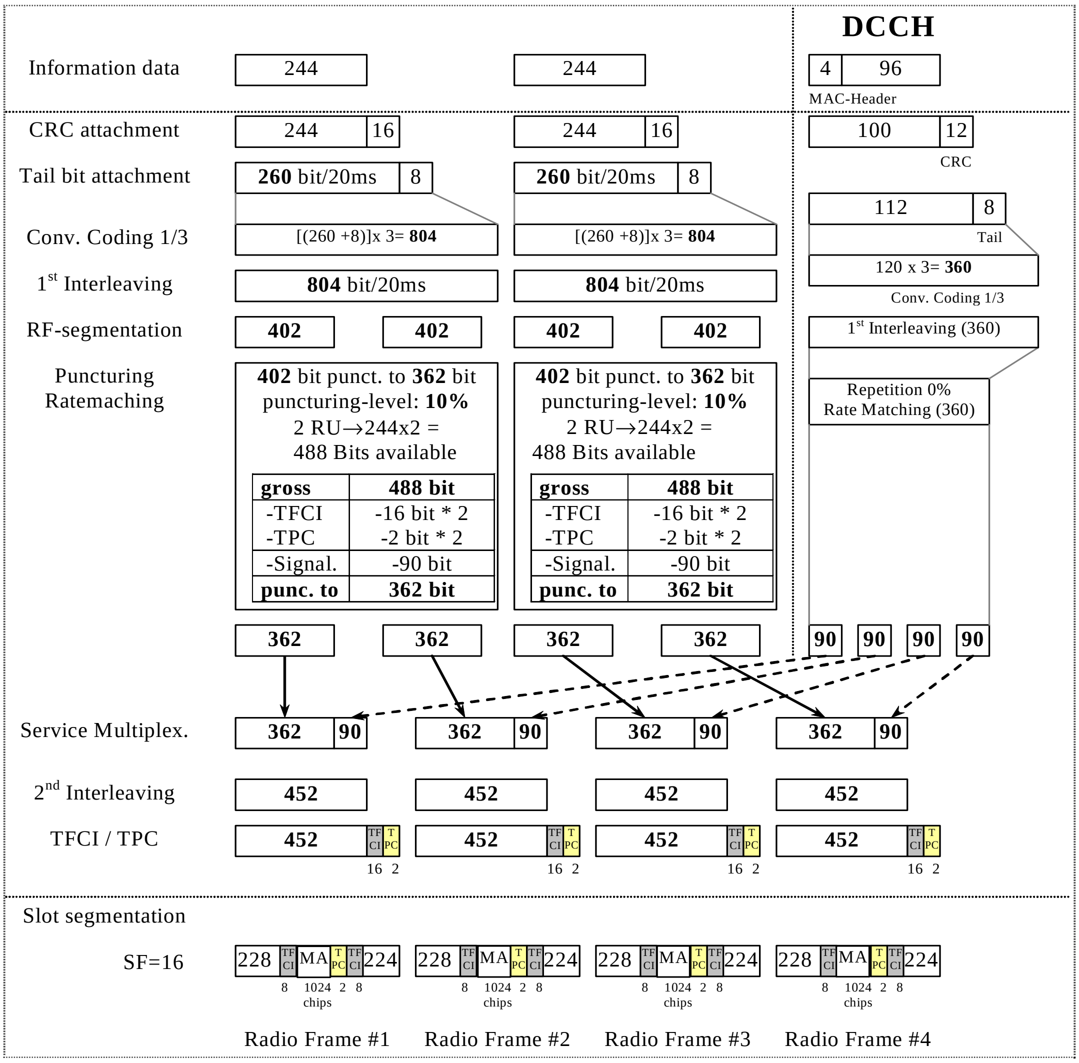
DCCH
Information data
244
244
4
96
MAC-Header
CRC attachment
244
16
244
16
100
12
CRC
Tail bit attachment
260 bit/20ms
8
260 bit/20ms
8
112
8
Tail
Conv. Coding 1/3
[(260 +8)]x 3= 804
[(260 +8)]x 3= 804
120 x 3= 360
Conv. Coding 1/3
1st Interleaving
804 bit/20ms
804 bit/20ms
RF-segmentation
402
402
402
402
1st Interleaving (360)
Puncturing Ratemaching
402 bit punct. to 362 bit puncturing-level: 10% 2 RU→244x2 = 488 Bits available
gross 488 bit
-TFCI -16 bit * 2
-TPC -2 bit * 2
-Signal. -90 bit
punc. to 362 bit
Repetition 0% Rate Matching (360)
362
362
362
362
90
90
90
90
Service Multiplex.
362 90
2nd Interleaving
452
TFCI / TPC
452 TFCI TPC
16 2
Slot segmentation
SF=16
228 TFCI MA TPC TFCI 224
8 1024 chips 2 8
Radio Frame #1
Radio Frame #2
Radio Frame #3
Radio Frame #4

Figure A.1B

A.2.2 UL reference measurement channel (64 kbps)

A.2.2.1 3,84 Mcps TDD Option

Table A.2

Parameter	Value
Information data rate	64 kbps
RU´s allocated	1 SF4 + 1 SF16 = 5RU
Midamble	512 chips
Interleaving	20 ms
Power control	2 Bit/user
TFCI	16 Bit/user
Inband signalling DCCH	2 kbps
Puncturing level at Code rate : 1/3 DCH of the DTCH / ½ DCH of the DCCH	43.8% / 13.3%

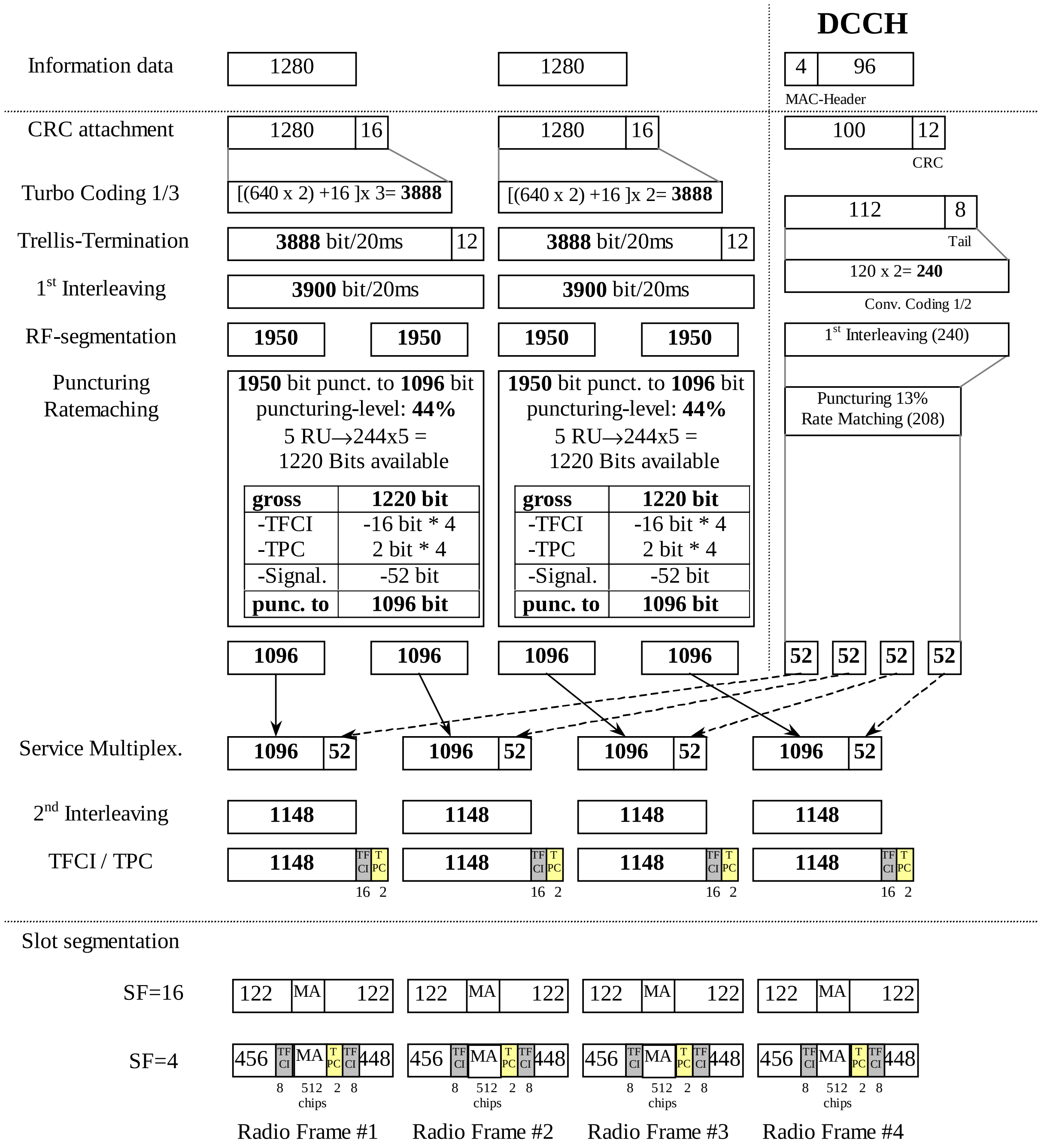
DCCH
Information data
1280
1280
4
96
MAC-Header
CRC attachment
1280
16
1280
16
100
12
CRC
Turbo Coding 1/3
[(640 x 2) +16]x 3= 3888
[(640 x 2) +16]x 2= 3888
112
8
Tail
Trellis-Termination
3888 bit/20ms
12
3888 bit/20ms
12
120 x 2= 240
Conv. Coding 1/2
1st Interleaving
3900 bit/20ms
3900 bit/20ms
RF-segmentation
1950
1950
1950
1950
1st Interleaving (240)
Puncturing
Ratemaching
1950 bit punct. to 1096 bit
puncturing-level: 44%
5 RU→244x5 =
1220 Bits available
gross
1220 bit
-TFCI
-16 bit * 4
-TPC
2 bit * 4
-Signal.
-52 bit
punc. to
1096 bit
1950 bit punct. to 1096 bit
puncturing-level: 44%
5 RU→244x5 =
1220 Bits available
gross
1220 bit
-TFCI
-16 bit * 4
-TPC
2 bit * 4
-Signal.
-52 bit
punc. to
1096 bit
Puncturing 13%
Rate Matching (208)
1096
1096
1096
1096
52
52
52
52
Service Multiplex.
1096
52
1096
52
1096
52
1096
52
2nd Interleaving
1148
1148
1148
1148
TFCI / TPC
1148
TFCI
TPC
16
2
1148
TFCI
TPC
16
2
1148
TFCI
TPC
16
2
1148
TFCI
TPC
16
2
Slot segmentation
SF=16
122
MA
122
122
MA
122
122
MA
122
122
MA
122
SF=4
456
TFCI
MA
TPC
TFCI
448
8
512
2
8
chips
456
TFCI
MA
TPC
TFCI
448
8
512
2
8
chips
456
TFCI
MA
TPC
TFCI
448
8
512
2
8
chips
456
TFCI
MA
TPC
TFCI
448
8
512
2
8
chips
Radio Frame #1
Radio Frame #2
Radio Frame #3
Radio Frame #4

Figure A.2

A.2.2.2 1,28 Mcps TDD Option

Table A.2A

Parameter	Value
Information data rate	64 kbps
RU's allocated	1TS (1*SF2) = 8RU/5ms
Midamble	144
Interleaving	20 ms
Power control (TPC)	4 Bit/user/10ms
TFCI	16 Bit/user/10ms
Synchronisation Shift (SS)	4 Bit/user/10ms
Inband signalling DCCH	2.4 kbps
Puncturing level at Code rate: 1/3 DCH of the DTCH / ½ DCH of the DCCH	32% / 0

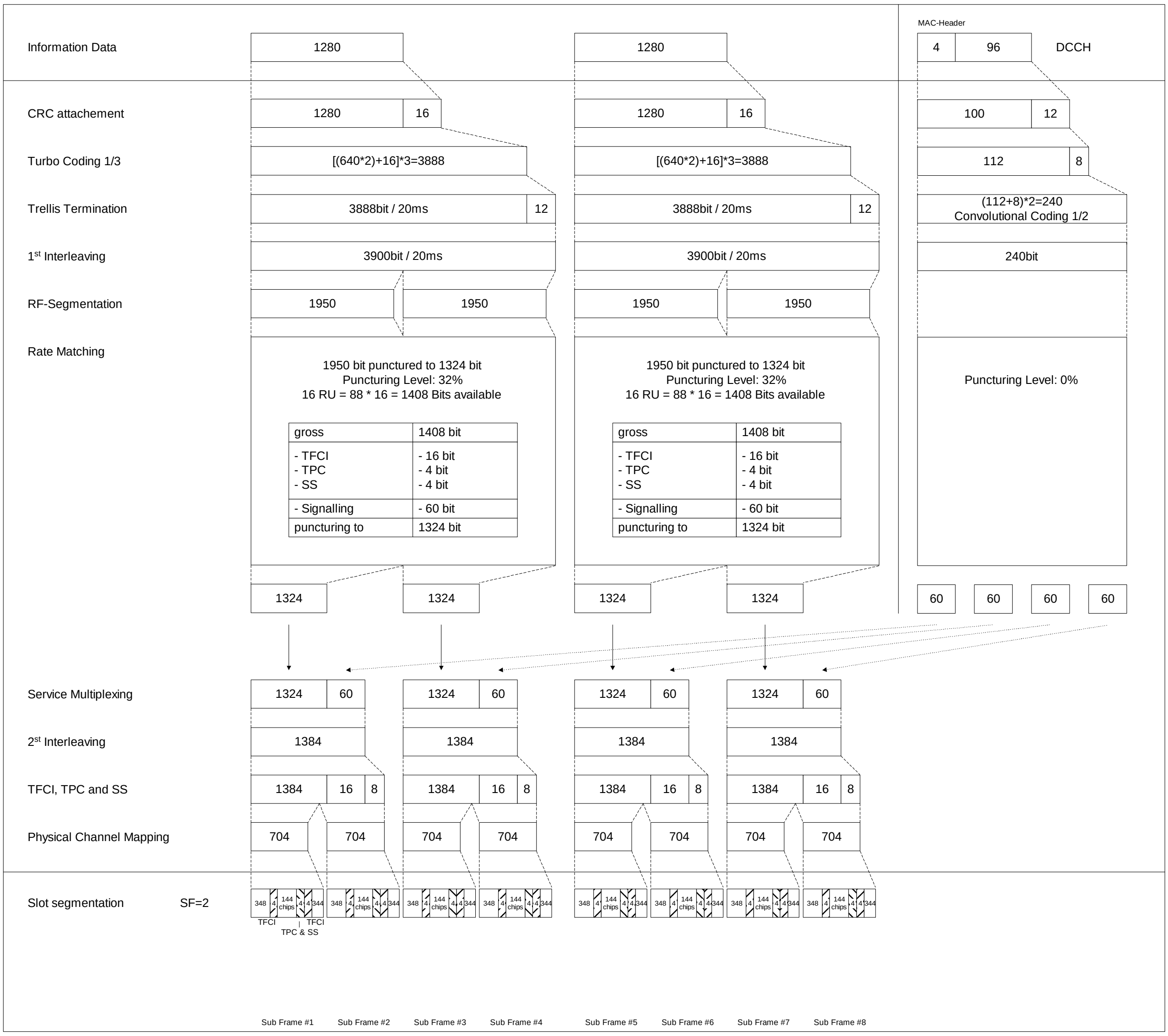
Information Data
1280
1280
MAC-Header
4
96
DCCH
CRC attachement
1280
16
100
12
Turbo Coding 1/3
[(640*2)+16]*3=3888
112
8
Trellis Termination
3888bit / 20ms
12
(112+8)*2=240
Convolutional Coding 1/2
1st Interleaving
3900bit / 20ms
240bit
RF-Segmentation
1950
1950
Rate Matching
1950 bit punctured to 1324 bit
Puncturing Level: 32%
16 RU = 88 * 16 = 1408 Bits available
Puncturing Level: 0%
gross
1408 bit
- TFCI
- TPC
- SS
- 16 bit
- 4 bit
- 4 bit
- Signalling
- 60 bit
puncturing to
1324 bit
1324
60
Service Multiplexing
1324
60
2st Interleaving
1384
TFCI, TPC and SS
1384
16
8
Physical Channel Mapping
704
Slot segmentation
SF=2
348
4
144 chips
4
344
TFCI
TFCI
TPC & SS
Sub Frame #1
Sub Frame #2
Sub Frame #3
Sub Frame #4
Sub Frame #5
Sub Frame #6
Sub Frame #7
Sub Frame #8

Figure A.2A

A.2.2.3 7,68 Mcps TDD Option

Table A.2B

Parameter	Value
Information data rate	64 kbps
RU´s allocated	1 SF8 + 1 SF32 = 5RU
Midamble	1024 chips
Interleaving	20 ms
Power control	2 Bit/user
TFCI	16 Bit/user
Inband signalling DCCH	2 kbps
Puncturing level at Code rate : 1/3 DCH of the DTCH / ½ DCH of the DCCH	43.8% / 13.3%

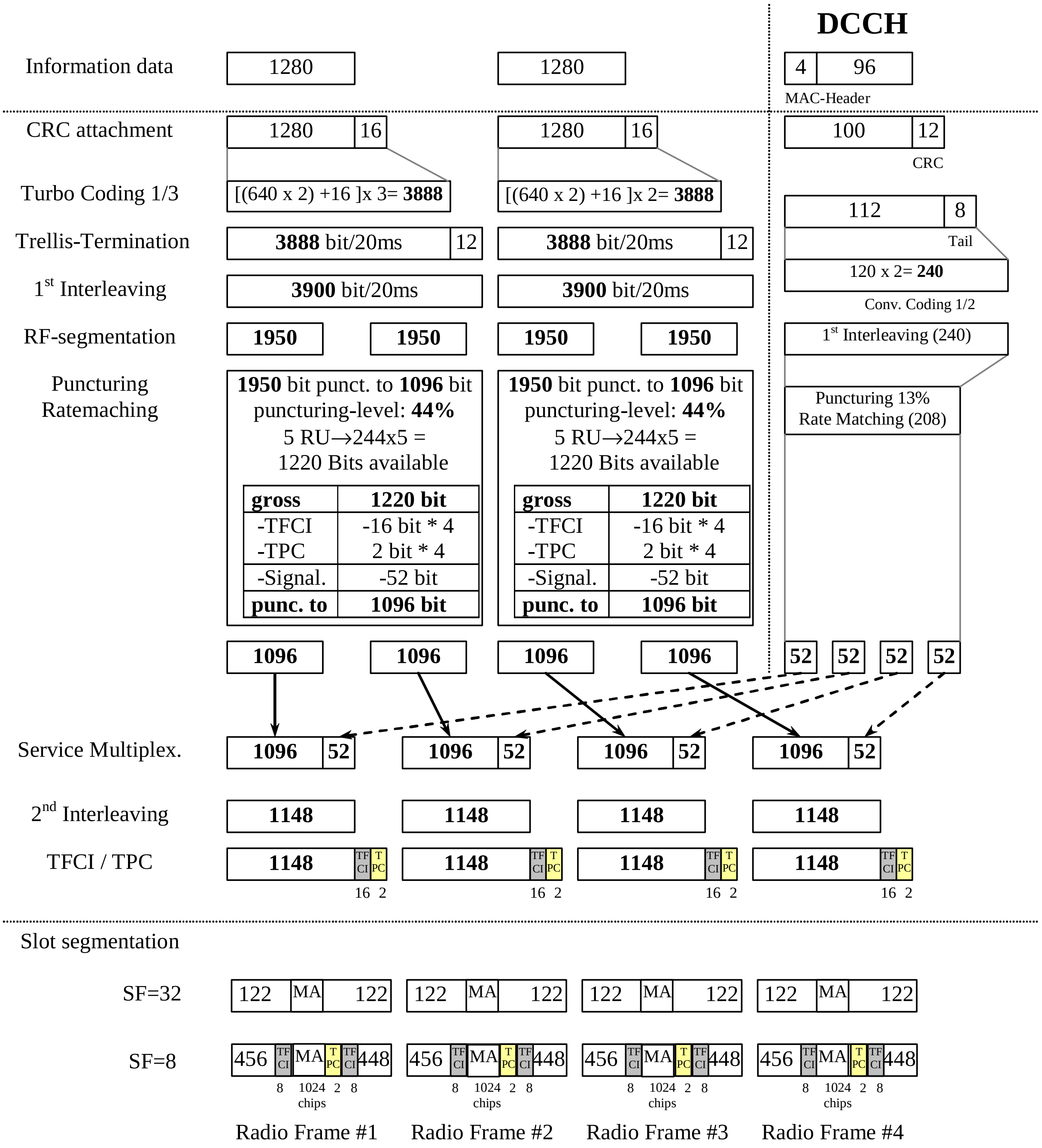
DCCH
Information data
1280
1280
4
96
MAC-Header
CRC attachment
1280
16
1280
16
100
12
CRC
Turbo Coding 1/3
[(640 x 2) +16]x 3= 3888
[(640 x 2) +16]x 2= 3888
112
8
Tail
120 x 2= 240
Conv. Coding 1/2
Trellis-Termination
3888 bit/20ms
12
3888 bit/20ms
12
1st Interleaving
3900 bit/20ms
3900 bit/20ms
1st Interleaving (240)
RF-segmentation
1950
1950
1950
1950
Puncturing
Ratemaching
1950 bit punct. to 1096 bit
puncturing-level: 44%
5 RU→244x5 =
1220 Bits available
gross 1220 bit
-TFCI -16 bit * 4
-TPC 2 bit * 4
-Signal. -52 bit
punc. to 1096 bit
Puncturing 13%
Rate Matching (208)
1096
1096
1096
1096
52
52
52
52
Service Multiplex.
1096 52
1096 52
1096 52
1096 52
2nd Interleaving
1148
1148
1148
1148
TFCI / TPC
1148 TFCI TPC
16 2
Slot segmentation
SF=32
122 MA 122
SF=8
456 TFCI MA TPC TFCI 448
8 1024 chips 2 8
Radio Frame #1
Radio Frame #2
Radio Frame #3
Radio Frame #4

Figure A.2B

A.2.3 UL reference measurement channel (144 kbps)

A.2.3.1 3,84 Mcps TDD Option

Table A.3

Parameter	Value
Information data rate	144 kbps
RU´s allocated	1 SF2 + 1 SF16 = 9RU
Midamble	256 chips
Interleaving	20 ms
Power control	2 Bit/user
TFCI	16 Bit/user
Inband signalling DCCH	2 kbps
Puncturing level at Code rate : 1/3 DCH of the DTCH / ½ DCH of the DCCH	47.3% / 20%

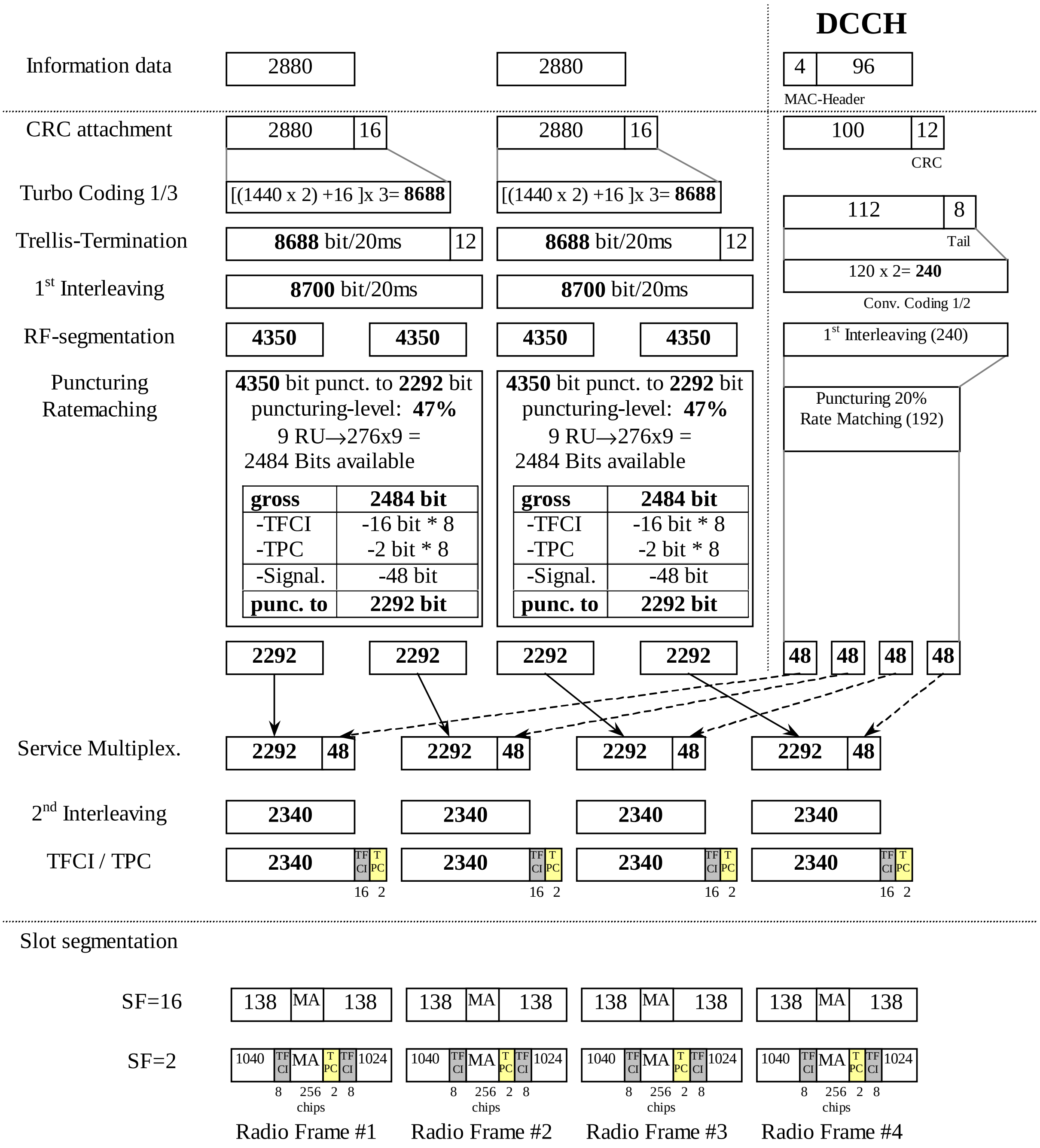
DCCH
Information data
2880
2880
4
96
MAC-Header
CRC attachment
2880 16
2880 16
100 12
CRC
Turbo Coding 1/3
[(1440 x 2) +16]x 3= 8688
[(1440 x 2) +16]x 3= 8688
112 8
Tail
Trellis-Termination
8688 bit/20ms 12
8688 bit/20ms 12
120 x 2= 240
Conv. Coding 1/2
1st Interleaving
8700 bit/20ms
8700 bit/20ms
1st Interleaving (240)
RF-segmentation
4350
4350
4350
4350
Puncturing
Ratemaching
4350 bit punct. to 2292 bit
puncturing-level: 47%
9 RU→276x9 =
2484 Bits available
gross 2484 bit
-TFCI -16 bit * 8
-TPC -2 bit * 8
-Signal. -48 bit
punc. to 2292 bit
Puncturing 20%
Rate Matching (192)
2292
2292
2292
2292
48
48
48
48
Service Multiplex.
2292 48
2292 48
2292 48
2292 48
2nd Interleaving
2340
2340
2340
2340
TFCI / TPC
2340 TFCI TPC
16 2
Slot segmentation
SF=16
138 MA 138
SF=2
1040 TFCI MA TPC TFCI 1024
8 256 2 8
chips
Radio Frame #1
Radio Frame #2
Radio Frame #3
Radio Frame #4

Figure A.3

A.2.3.2 1,28 Mcps TDD Option

Table A.3A

Parameter	Value
Information data rate	144 kbps
RU's allocated	2TS (1*SF2) = 16RU/5ms
Midamble	144
Interleaving	20 ms
Power control (TPC)	8 Bit/user/10ms
TFCI	32 Bit/user/10ms
Synchronisation Shift (SS)	8 Bit/user/10ms
Inband signalling DCCH	2.4 kbps
Puncturing level at Code rate: 1/3 DCH of the DTCH / ½ DCH of the DCCH	38% / 7%

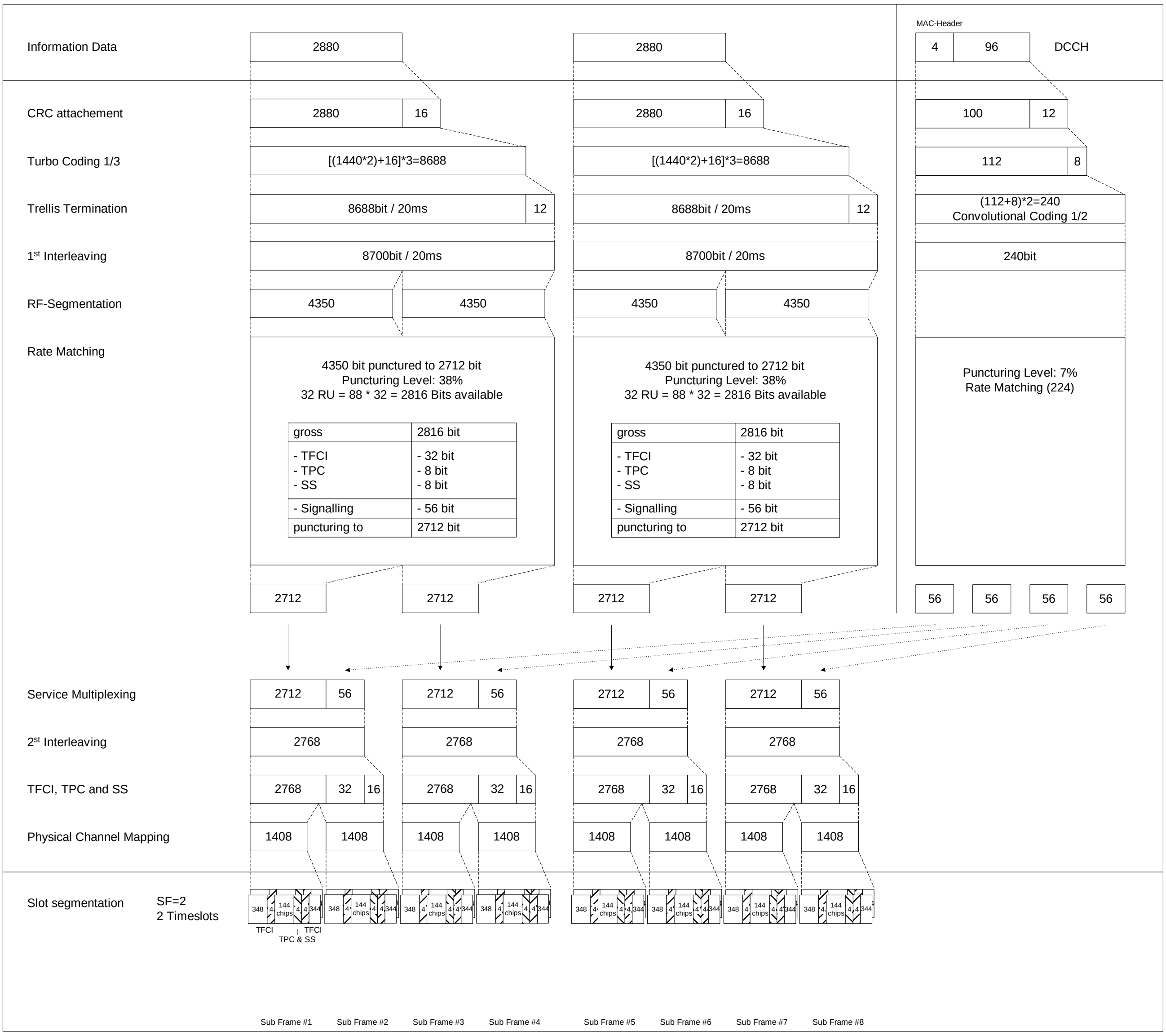
Information Data
2880
2880
MAC-Header
4
96
DCCH
CRC attachement
2880
16
2880
16
100
12
Turbo Coding 1/3
[(1440*2)+16]*3=8688
[(1440*2)+16]*3=8688
112
8
Trellis Termination
8688bit / 20ms
12
8688bit / 20ms
12
(112+8)*2=240
Convolutional Coding 1/2
1st Interleaving
8700bit / 20ms
8700bit / 20ms
240bit
RF-Segmentation
4350
4350
4350
4350
Rate Matching
4350 bit punctured to 2712 bit
Puncturing Level: 38%
32 RU = 88 * 32 = 2816 Bits available
gross
2816 bit
- TFCI
- TPC
- SS
- 32 bit
- 8 bit
- 8 bit
- Signalling
- 56 bit
puncturing to
2712 bit
4350 bit punctured to 2712 bit
Puncturing Level: 38%
32 RU = 88 * 32 = 2816 Bits available
gross
2816 bit
- TFCI
- TPC
- SS
- 32 bit
- 8 bit
- 8 bit
- Signalling
- 56 bit
puncturing to
2712 bit
Puncturing Level: 7%
Rate Matching (224)
2712
2712
2712
2712
56
56
56
56
Service Multiplexing
2712
56
2712
56
2712
56
2712
56
2st Interleaving
2768
2768
2768
2768
TFCI, TPC and SS
2768
32
16
2768
32
16
2768
32
16
2768
32
16
Physical Channel Mapping
1408
1408
1408
1408
1408
1408
1408
1408
Slot segmentation
SF=2
2 Timeslots
348
4
144 chips
4
344
TFCI
TFCI
TPC & SS
Sub Frame #1
Sub Frame #2
Sub Frame #3
Sub Frame #4
Sub Frame #5
Sub Frame #6
Sub Frame #7
Sub Frame #8

Figure A.3A

A.2.3.3 7,68 Mcps TDD Option

Table A.3B

Parameter	Value
Information data rate	144 kbps
RU´s allocated	1 SF4 + 1 SF32 = 9RU
Midamble	512 chips
Interleaving	20 ms
Power control	2 Bit/user
TFCI	16 Bit/user
Inband signalling DCCH	2 kbps
Puncturing level at Code rate : 1/3 DCH of the DTCH / ½ DCH of the DCCH	47.3% / 20%

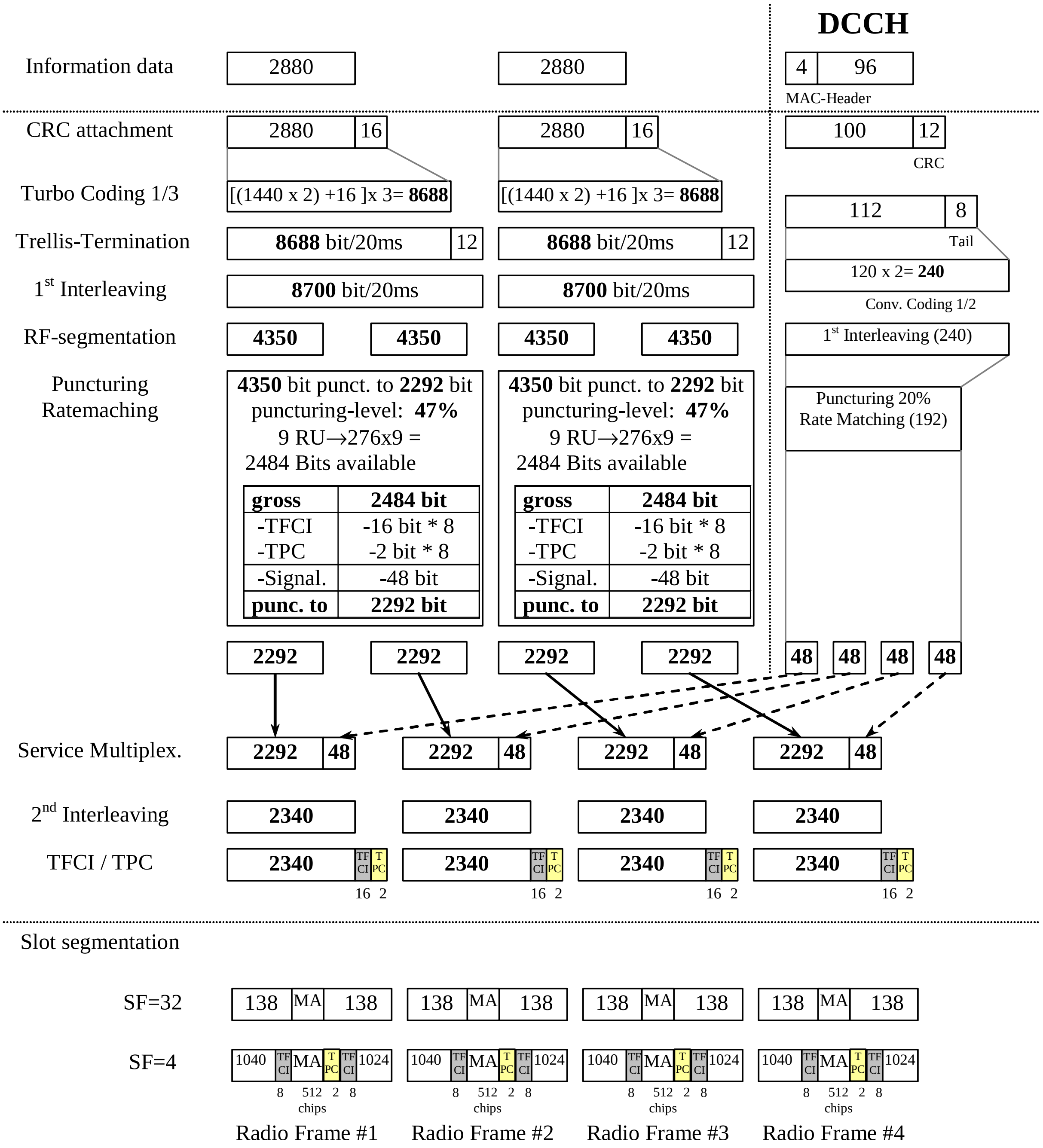
DCCH
Information data
2880
2880
4
96
MAC-Header
CRC attachment
2880
16
2880
16
100
12
CRC
Turbo Coding 1/3
[(1440 x 2) +16]x 3= 8688
[(1440 x 2) +16]x 3= 8688
112
8
Tail
Trellis-Termination
8688 bit/20ms
12
8688 bit/20ms
12
120 x 2= 240
Conv. Coding 1/2
1st Interleaving
8700 bit/20ms
8700 bit/20ms
1st Interleaving (240)
RF-segmentation
4350
4350
4350
4350
Puncturing
Ratemaching
4350 bit punct. to 2292 bit
puncturing-level: 47%
9 RU→276x9 =
2484 Bits available
gross 2484 bit
-TFCI -16 bit * 8
-TPC -2 bit * 8
-Signal. -48 bit
punc. to 2292 bit
4350 bit punct. to 2292 bit
puncturing-level: 47%
9 RU→276x9 =
2484 Bits available
gross 2484 bit
-TFCI -16 bit * 8
-TPC -2 bit * 8
-Signal. -48 bit
punc. to 2292 bit
Puncturing 20%
Rate Matching (192)
2292
2292
2292
2292
48
48
48
48
Service Multiplex.
2292 48
2292 48
2292 48
2292 48
2nd Interleaving
2340
2340
2340
2340
TFCI / TPC
2340 TFCI TPC
2340 TFCI TPC
2340 TFCI TPC
2340 TFCI TPC
16 2
16 2
16 2
16 2
Slot segmentation
SF=32
138 MA 138
138 MA 138
138 MA 138
138 MA 138
SF=4
1040 TFCI MA TPC TFCI 1024
1040 TFCI MA TPC TFCI 1024
1040 TFCI MA TPC TFCI 1024
1040 TFCI MA TPC TFCI 1024
8 512 2 8
chips
8 512 2 8
chips
8 512 2 8
chips
8 512 2 8
chips
Radio Frame #1
Radio Frame #2
Radio Frame #3
Radio Frame #4

Figure A.3B

A.2.4 UL reference measurement channel (384 kbps)

A.2.4.1 3,84 Mcps TDD Option

Table A.4

Parameter	Value
Information data rate	384 kbps
RU´s allocated	8*3TS = 24RU
Midamble	256 chips
Interleaving	20 ms
Power control	2 Bit/user
TFCI	16 Bit/user
Inband signalling DCCH	2 kbps
Puncturing level at Code rate : 1/3 DCH of the DTCH / ½ DCH of the DCCH	43.4% / 15.3%

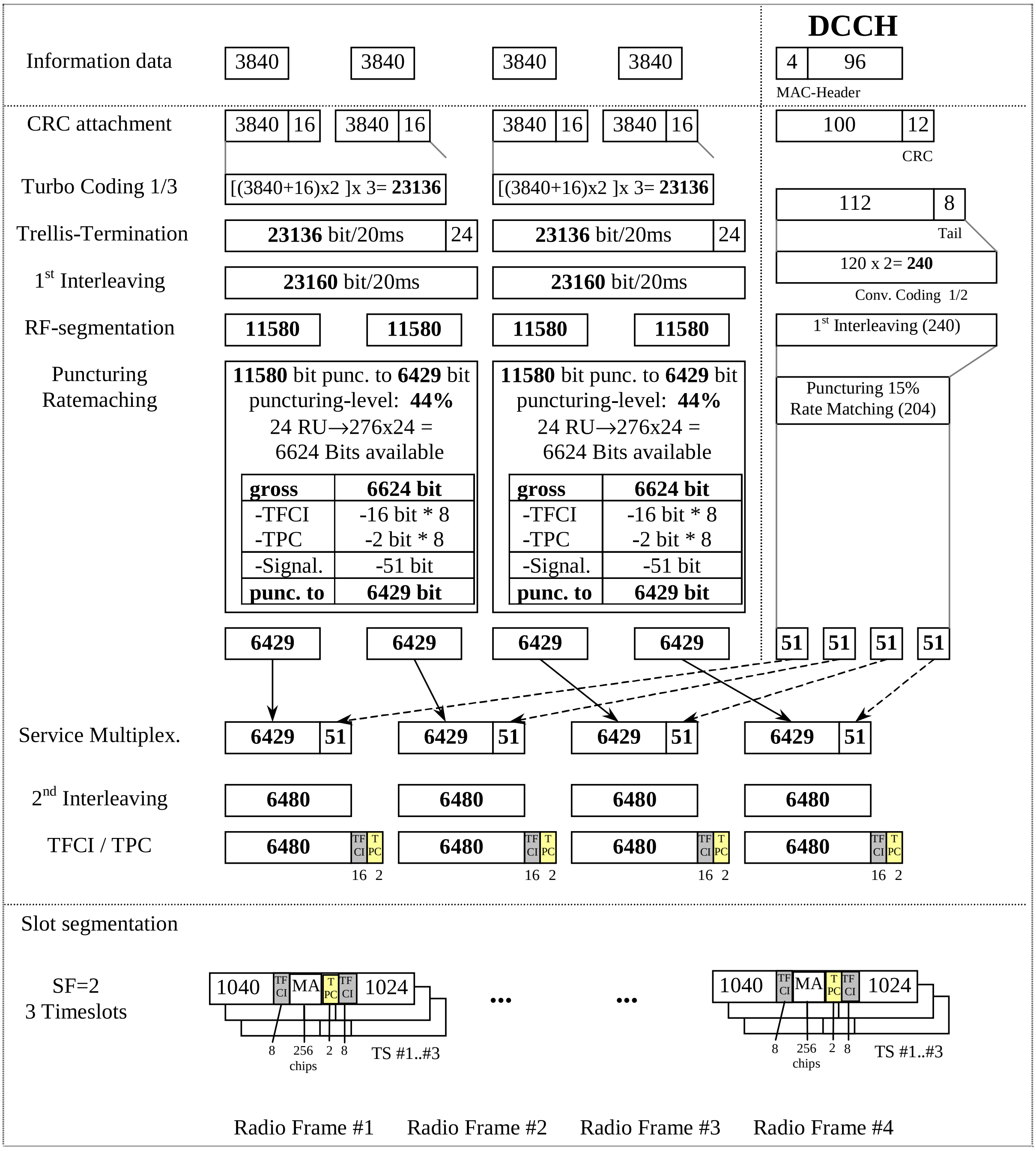
DCCH
Information data
3840
3840
3840
3840
4
96
MAC-Header
CRC attachment
3840 16
3840 16
3840 16
3840 16
100
12
CRC
Turbo Coding 1/3
[(3840+16)x2]x 3= 23136
[(3840+16)x2]x 3= 23136
112
8
Tail
Trellis-Termination
23136 bit/20ms
24
23136 bit/20ms
24
120 x 2= 240
Conv. Coding 1/2
1st Interleaving
23160 bit/20ms
23160 bit/20ms
1st Interleaving (240)
RF-segmentation
11580
11580
11580
11580
Puncturing Ratemaching
11580 bit punc. to 6429 bit
puncturing-level: 44%
24 RU→276x24 =
6624 Bits available
gross 6624 bit
-TFCI -16 bit * 8
-TPC -2 bit * 8
-Signal. -51 bit
punc. to 6429 bit
11580 bit punc. to 6429 bit
puncturing-level: 44%
24 RU→276x24 =
6624 Bits available
gross 6624 bit
-TFCI -16 bit * 8
-TPC -2 bit * 8
-Signal. -51 bit
punc. to 6429 bit
Puncturing 15%
Rate Matching (204)
6429
6429
6429
6429
51
51
51
51
Service Multiplex.
6429 51
6429 51
6429 51
6429 51
2nd Interleaving
6480
6480
6480
6480
TFCI / TPC
6480 TFCI TPC
16 2
6480 TFCI TPC
16 2
6480 TFCI TPC
16 2
6480 TFCI TPC
16 2
Slot segmentation
SF=2
3 Timeslots
1040 TFCI MA TPC TFCI 1024
8 256 chips 2 8
TS #1..#3
...
...
1040 TFCI MA TPC TFCI 1024
8 256 chips 2 8
TS #1..#3
Radio Frame #1
Radio Frame #2
Radio Frame #3
Radio Frame #4

Figure A.4

A.2.4.2 1,28 Mcps TDD Option

Table A.4A

Parameter	Value
Information data rate	384 kbps
RU's allocated	4TS (1*SF2 + 1*SF16) = 36RU/5ms
Midamble	144
Interleaving	20 ms
Power control (TPC)	16 Bit/user/10ms
TFCI	64 Bit/user/10ms
Synchronisation Shift (SS)	16 Bit/user/10ms
Inband signalling DCCH	2.4 kbps
Puncturing level at Code rate: 1/3 DCH of the DTCH / ½ DCH of the DCCH	47% / 12%

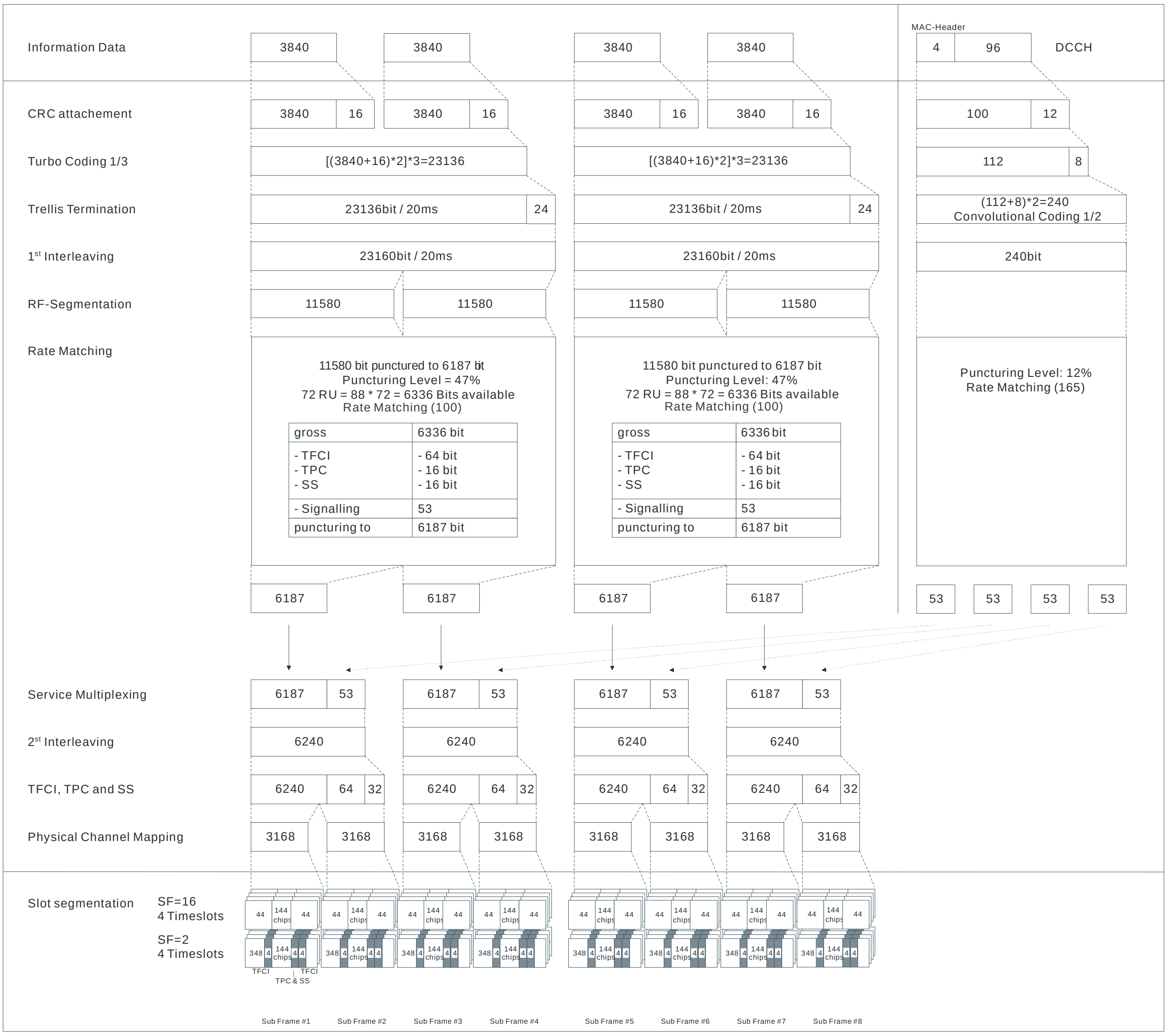
Information Data
3840
3840
3840
3840
MAC-Header
4
96
DCCH
CRC attachement
3840 16
3840 16
3840 16
3840 16
100 12
Turbo Coding 1/3
[(3840+16)*2]*3=23136
[(3840+16)*2]*3=23136
112 8
Trellis Termination
23136bit / 20ms 24
23136bit / 20ms 24
(112+8)*2=240
Convolutional Coding 1/2
1st Interleaving
23160bit / 20ms
23160bit / 20ms
240bit
RF-Segmentation
11580
11580
11580
11580
Rate Matching
11580 bit punctured to 6187 bit
Puncturing Level = 47%
72 RU = 88 * 72 = 6336 Bits available
Rate Matching (100)
gross 6336 bit
- TFCI - 64 bit
- TPC - 16 bit
- SS - 16 bit
- Signalling 53
puncturing to 6187 bit
11580 bit punctured to 6187 bit
Puncturing Level: 47%
72 RU = 88 * 72 = 6336 Bits available
Rate Matching (100)
gross 6336 bit
- TFCI - 64 bit
- TPC - 16 bit
- SS - 16 bit
- Signalling 53
puncturing to 6187 bit
Puncturing Level: 12%
Rate Matching (165)
6187
6187
6187
6187
53
53
53
53
Service Multiplexing
6187 53
6187 53
6187 53
6187 53
2st Interleaving
6240
6240
6240
6240
TFCI, TPC and SS
6240 64 32
6240 64 32
6240 64 32
6240 64 32
Physical Channel Mapping
3168
3168
3168
3168
3168
3168
3168
3168
Slot segmentation
SF=16
4 Timeslots
44 144 chips 44
SF=2
4 Timeslots
348 4 144 chips 4 4
TFCI
TFCI
TPC & SS
Sub Frame #1
Sub Frame #2
Sub Frame #3
Sub Frame #4
Sub Frame #5
Sub Frame #6
Sub Frame #7
Sub Frame #8

Figure A.4A

A.2.4.3 7,68 Mcps TDD Option

Table A.4B

Parameter	Value
Information data rate	384 kbps
RU´s allocated	8*3TS = 24RU
Midamble	512 chips
Interleaving	20 ms
Power control	2 Bit/user
TFCI	16 Bit/user
Inband signalling DCCH	2 kbps
Puncturing level at Code rate : 1/3 DCH of the DTCH / ½ DCH of the DCCH	43.4% / 15.3%

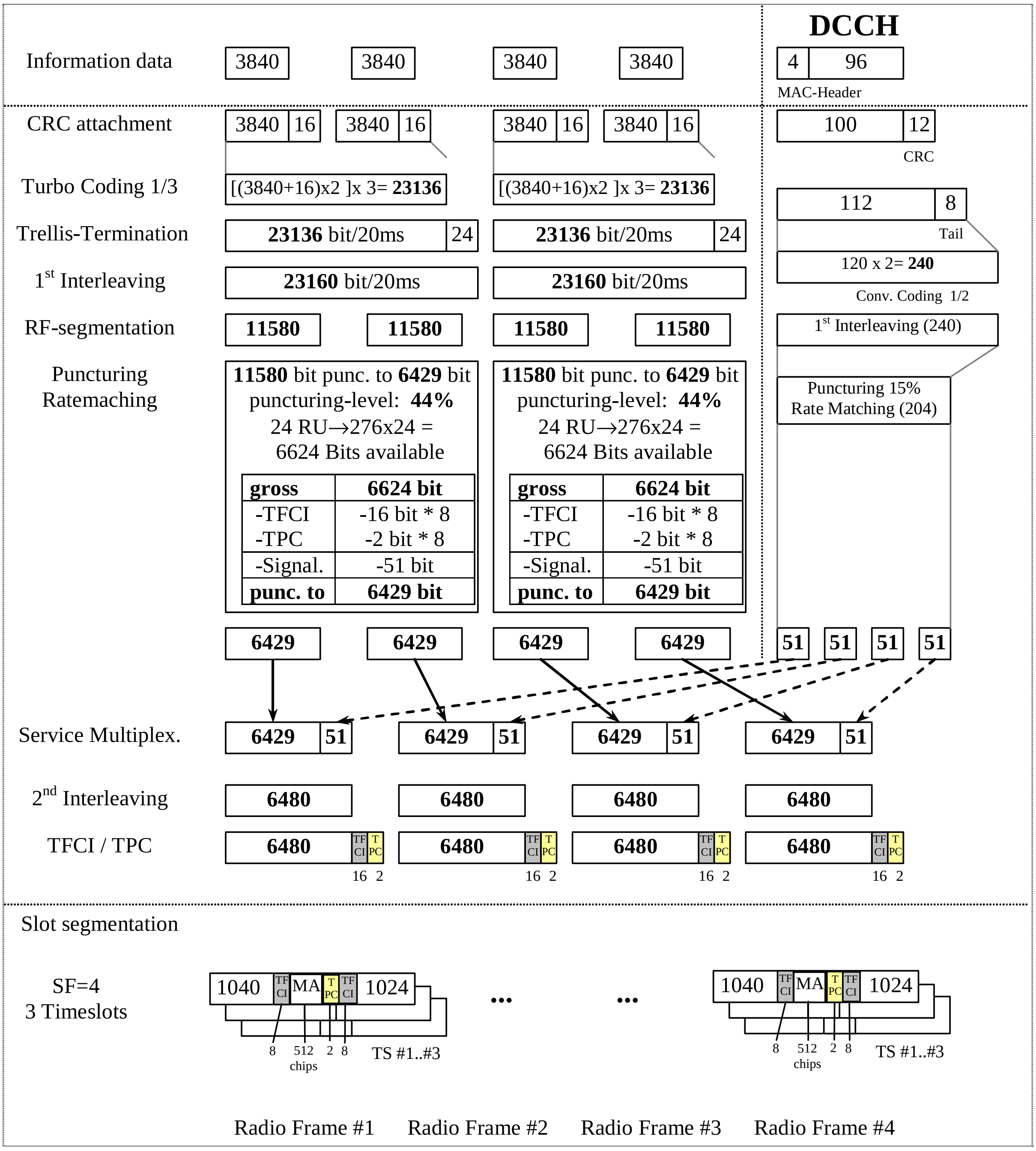
DCCH
Information data
3840
3840
3840
3840
4
96
MAC-Header
CRC attachment
3840 16
3840 16
3840 16
3840 16
100
12
CRC
Turbo Coding 1/3
[(3840+16)x2]x 3= 23136
[(3840+16)x2]x 3= 23136
112
8
Tail
Trellis-Termination
23136 bit/20ms 24
23136 bit/20ms 24
120 x 2= 240
Conv. Coding 1/2
1st Interleaving
23160 bit/20ms
23160 bit/20ms
1st Interleaving (240)
RF-segmentation
11580
11580
11580
11580
Puncturing Ratemaching
11580 bit punc. to 6429 bit puncturing-level: 44% 24 RU→276x24 = 6624 Bits available
gross 6624 bit
-TFCI -16 bit * 8
-TPC -2 bit * 8
-Signal. -51 bit
punc. to 6429 bit
11580 bit punc. to 6429 bit puncturing-level: 44% 24 RU→276x24 = 6624 Bits available
gross 6624 bit
-TFCI -16 bit * 8
-TPC -2 bit * 8
-Signal. -51 bit
punc. to 6429 bit
Puncturing 15% Rate Matching (204)
6429
6429
6429
6429
51
51
51
51
Service Multiplex.
6429 51
6429 51
6429 51
6429 51
2nd Interleaving
6480
6480
6480
6480
TFCI / TPC
6480 TFCI TPC 16 2
6480 TFCI TPC 16 2
6480 TFCI TPC 16 2
6480 TFCI TPC 16 2
Slot segmentation
SF=4
3 Timeslots
1040 TFCI MA TPC TFCI 1024
8 512 chips 2 8
TS #1..#3
...
...
1040 TFCI MA TPC TFCI 1024
8 512 chips 2 8
TS #1..#3
Radio Frame #1
Radio Frame #2
Radio Frame #3
Radio Frame #4

Figure A.4B

A.2.5 RACH reference measurement channel

A.2.5.0 General

A.2.5.0.1 3,84 Mcps TDD Option

Table A.5

Parameter	Value
Information data rate e.g. 2 TBs (B_{RACH}=2): **SF16:** 0% puncturing rate at CR=1/2 10% puncturing rate at CR=1/2 $N_{RACH} = \frac{\frac{232+N_{RM}}{2}-8}{B_{RACH}}-8$ **SF8:** 0% puncturing rate at CR=1/2 10% puncturing rate at CR=1/2 $N_{RACH} = \frac{\frac{464+N_{RM}}{2}-8}{B_{RACH}}-16$	46 bits per frame and TB 53 bits per frame and TB 96 bits per frame and TB 109 bits per frame and TB
RU´s allocated	1 RU
Midamble	**512** chips
Power control	0 bit
TFCI	0 bit

N_{RACH} = number of bits per TB

B_{RACH} = number of TBs

A.2.5.0.2 1,28 Mcps TDD Option

Table A.5A

Parameter	Value
Information data rate: $N_{RACH} = \frac{\frac{88*\frac{16}{SF}\left(\frac{N_{RM}}{100}+1\right)}{2}-8}{B_{RACH}}-16$	B_{RACH}=1 CRC length = 16 Tail Bits = 8
SF16 (RU"s allocated:1): 0% puncturing rate at CR=1/2 ~10% puncturing rate at CR=1/2	20 bits per frame and TB 24 bits per frame and TB
SF8 (RU"s allocated:2): 0% puncturing rate at CR=1/2 ~10% puncturing rate at CR=1/2	64 bits per frame and TB 73 bits per frame and TB
SF4 (RU"s allocated:4): 0% puncturing rate at CR=1/2 ~10% puncturing rate at CR=1/2	152 bits per frame and TB 170 bits per frame and TB
TTI	5msec
Midamble	144 chips
Power control	0 bit
TFCI	0 bit

N_{RACH} = number of bits per TB

B_{RACH} = number of TBs

N_{RM} = puncturing rate

A.2.5.0.3 7,68 Mcps TDD Option

Table A.5B

Parameter	Value
Information data rate e.g. 2 TBs (B_{RACH}=2): **SF32:** 0% puncturing rate at CR=1/2 10% puncturing rate at CR=1/2 $N_{RACH} = \frac{\frac{232 + N_{RM}}{2} - 8}{B_{RACH}} - 8$ **SF16:** 0% puncturing rate at CR=1/2 10% puncturing rate at CR=1/2 $N_{RACH} = \frac{\frac{464 + N_{RM}}{2} - 8}{B_{RACH}} - 16$	46 bits per frame and TB 53 bits per frame and TB 96 bits per frame and TB 109 bits per frame and TB
RU´s allocated	1 RU for SF32, 2 RUs for SF16
Midamble	**1024** chips
Power control	0 bit
TFCI	0 bit

N_{RACH} = number of bits per TB

B_{RACH} = number of TBs

A.2.5.1 RACH mapped to 1 code SF16

A.2.5.1.1 3,84 Mcps TDD Option

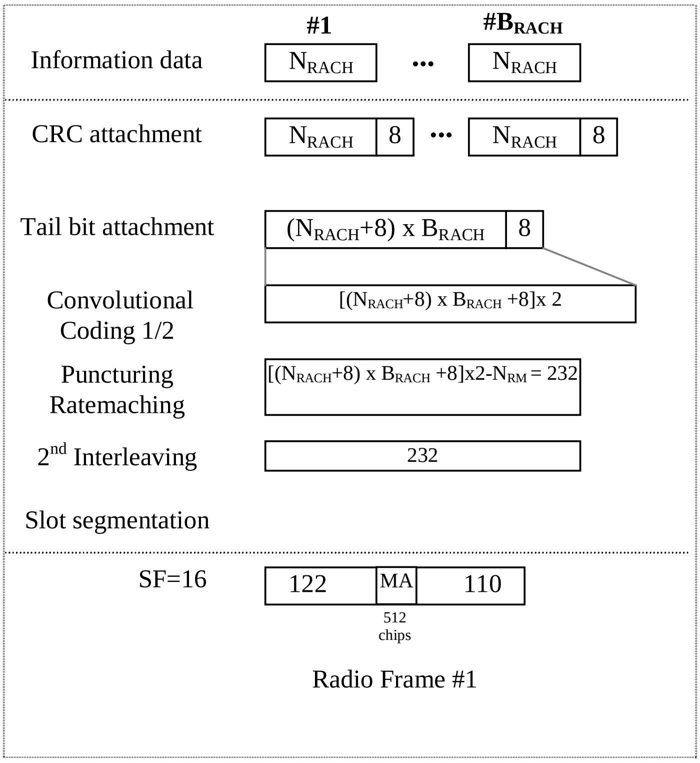
#1
#B_RACH
Information data
N_RACH
•••
N_RACH
CRC attachment
N_RACH 8
•••
N_RACH 8
Tail bit attachment
(N_RACH+8) x B_RACH 8
Convolutional Coding 1/2
[(N_RACH+8) x B_RACH +8]x 2
Puncturing Ratemaching
[(N_RACH+8) x B_RACH +8]x2-N_RM = 232
2nd Interleaving
232
Slot segmentation
SF=16
122 MA 110
512 chips
Radio Frame #1

Figure A.5

A.2.5.1.2 1,28 Mcps TDD Option

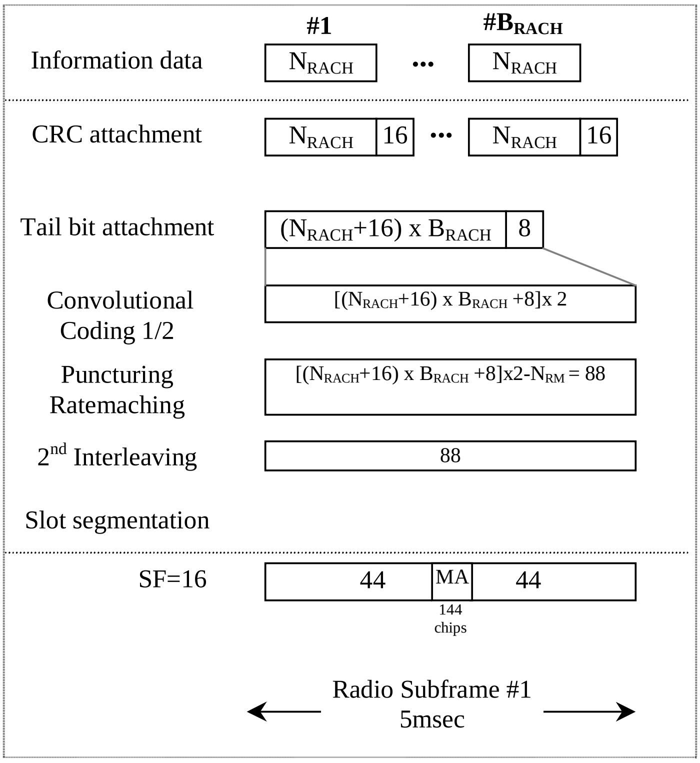
#1
#B_RACH
Information data
N_RACH
•••
N_RACH
CRC attachment
N_RACH 16
•••
N_RACH 16
Tail bit attachment
(N_RACH+16) x B_RACH 8
Convolutional Coding 1/2
[(N_RACH+16) x B_RACH +8]x 2
Puncturing Ratemaching
[(N_RACH+16) x B_RACH +8]x2-N_RM = 88
2nd Interleaving
88
Slot segmentation
SF=16
44 MA 44
144 chips
Radio Subframe #1
5msec

Figure A.5A

A.2.5.1.3 7,68 Mcps TDD Option

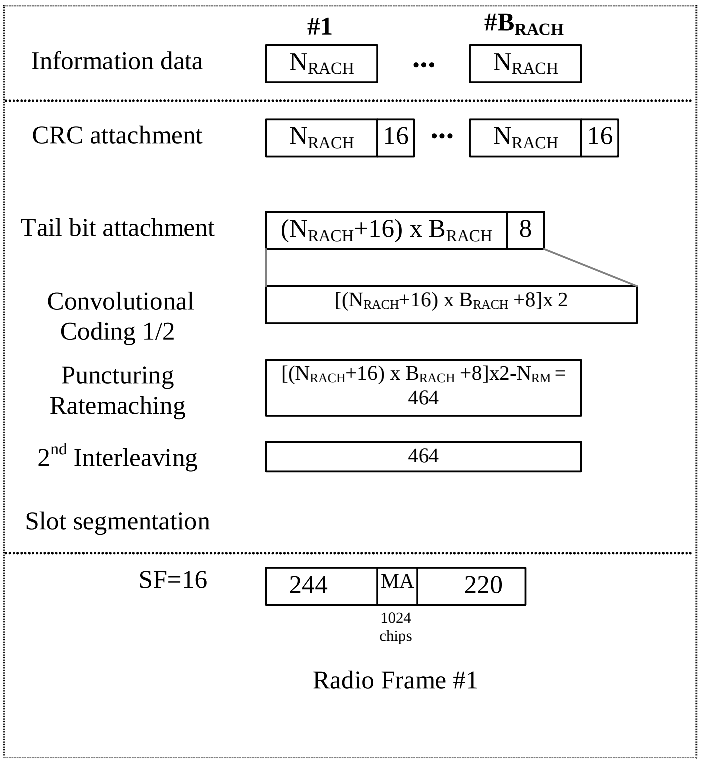
#1
#B_RACH
Information data
N_RACH
N_RACH
CRC attachment
N_RACH 16
N_RACH 16
Tail bit attachment
(N_RACH+16) x B_RACH
8
Convolutional Coding 1/2
[(N_RACH+16) x B_RACH +8]x 2
Puncturing Ratemaching
[(N_RACH+16) x B_RACH +8]x2-N_RM = 464
2nd Interleaving
464
Slot segmentation
SF=16
244
MA
220
1024 chips
Radio Frame #1

Figure A.5B

A.2.5.2 RACH mapped to 1 code SF8

A.2.5.2.1 3,84 Mcps TDD Option

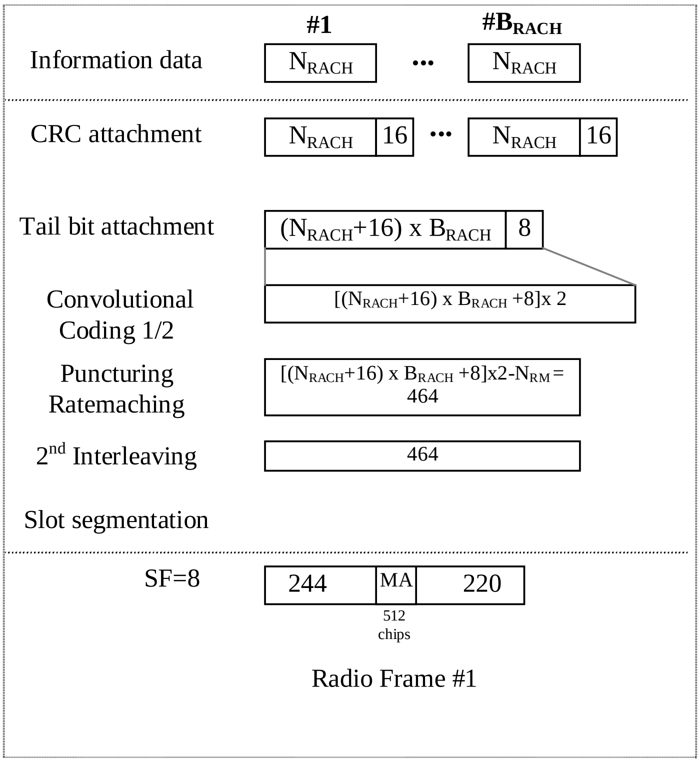
#1
#B_RACH
Information data
N_RACH
N_RACH
CRC attachment
N_RACH 16
N_RACH 16
Tail bit attachment
(N_RACH+16) x B_RACH
8
Convolutional Coding 1/2
[(N_RACH+16) x B_RACH +8]x 2
Puncturing Ratemaching
[(N_RACH+16) x B_RACH +8]x2-N_RM = 464
2nd Interleaving
464
Slot segmentation
SF=8
244
MA
220
512 chips
Radio Frame #1

Figure A.6

A.2.5.2.2 1,28 Mcps TDD Option

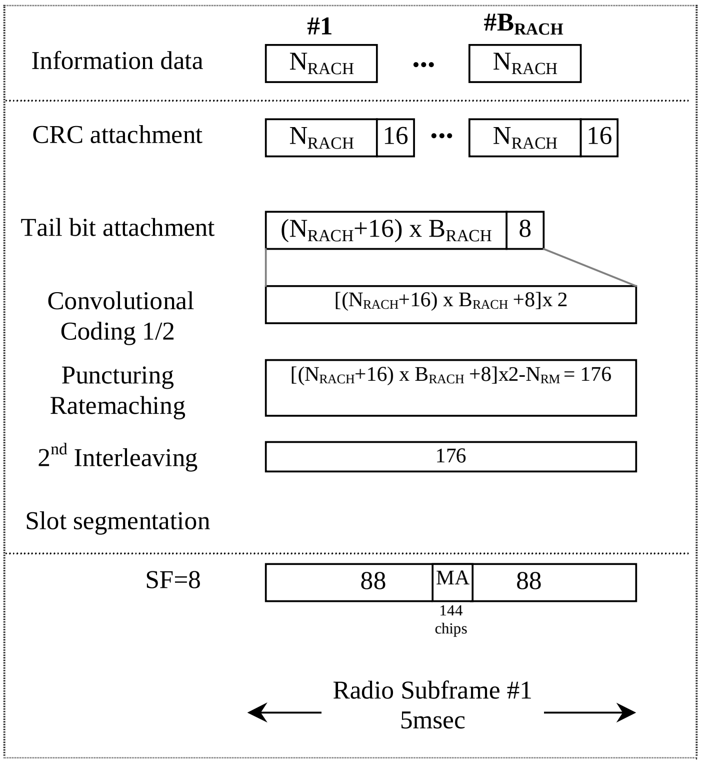
#1
#B RACH
Information data
N RACH
•••
N RACH
CRC attachment
N RACH 16
N RACH 16
Tail bit attachment
(N RACH+16) x B RACH 8
Convolutional Coding 1/2
[(N RACH+16) x B RACH +8]x 2
Puncturing Ratemaching
[(N RACH+16) x B RACH +8]x2-N RM = 176
2nd Interleaving
176
Slot segmentation
SF=8
88 MA 88
144 chips
Radio Subframe #1
5msec

Figure A.6A

A.2.5.3 RACH mapped to 1 code SF4 (1,28 Mcps option only)

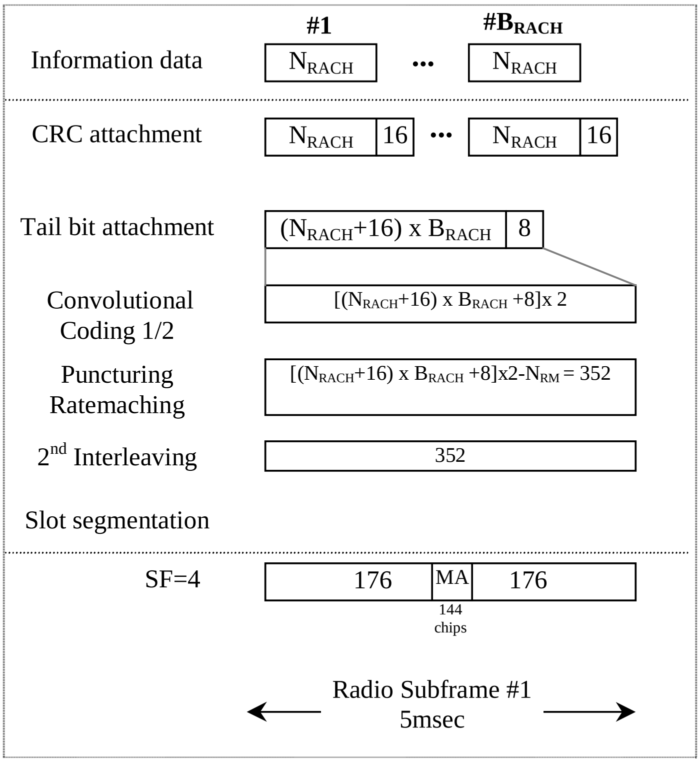
#1
#B RACH
Information data
N RACH
•••
N RACH
CRC attachment
N RACH 16
N RACH 16
Tail bit attachment
(N RACH+16) x B RACH 8
Convolutional Coding 1/2
[(N RACH+16) x B RACH +8]x 2
Puncturing Ratemaching
[(N RACH+16) x B RACH +8]x2-N RM = 352
2nd Interleaving
352
Slot segmentation
SF=4
176 MA 176
144 chips
Radio Subframe #1
5msec

Figure A.7A

A.2.5.4 RACH mapped to 1 code SF32 (7,68 Mcps option only)

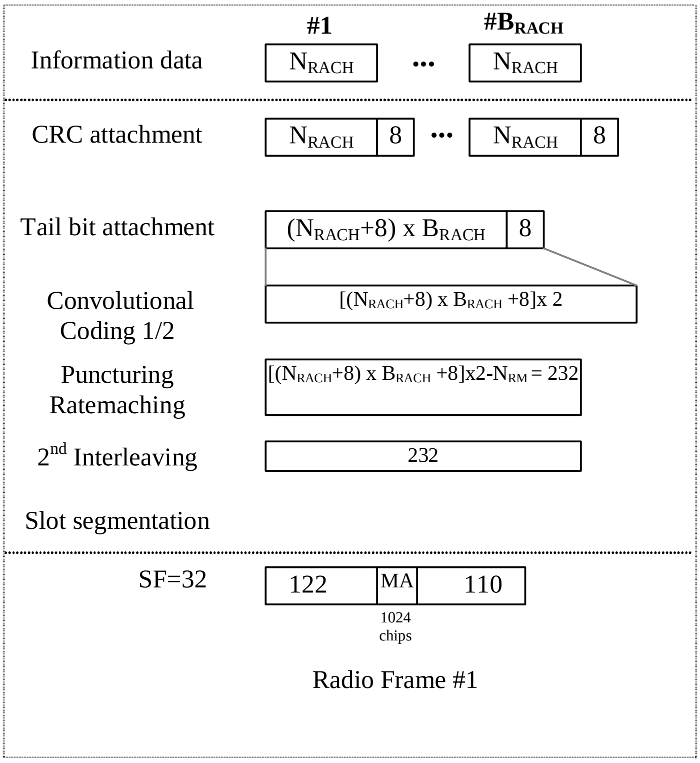
#1
#B_RACH
Information data
N_RACH
N_RACH
CRC attachment
N_RACH 8
N_RACH 8
Tail bit attachment
(N_RACH+8) x B_RACH 8
Convolutional Coding 1/2
[(N_RACH+8) x B_RACH +8]x 2
Puncturing Ratemaching
[(N_RACH+8) x B_RACH +8]x2-N_RM = 232
2nd Interleaving
232
Slot segmentation
SF=32
122 MA 110
1024 chips
Radio Frame #1

Figure A.8B

A.3 E-DCH Reference measurement channels

A.3.1 E-DCH Fixed Reference Channels

A.3.1.1 3,84 Mcps TDD Option

A.3.1.1.1 Fixed Reference Channel 1 (FRC1)

Table A.6: E-DCH Fixed Reference Channel 1 (3.84 Mcps TDD Option)

Parameter	Unit	Value
Maximum information bit throughput	kbps	34.7
Information Bit Payload (N_{INF})	Bits	347
Number Code Blocks	Blocks	1
Number of coded bits per TTI	Bits	1200
Coding Rate		0.312
Modulation		QPSK
Number of E-DCH Timeslots	Slots	6
Number of E-DCH codes per TS	Codes	1
Spreading factor	SF	16
Number of E-UCCH per TTI		4

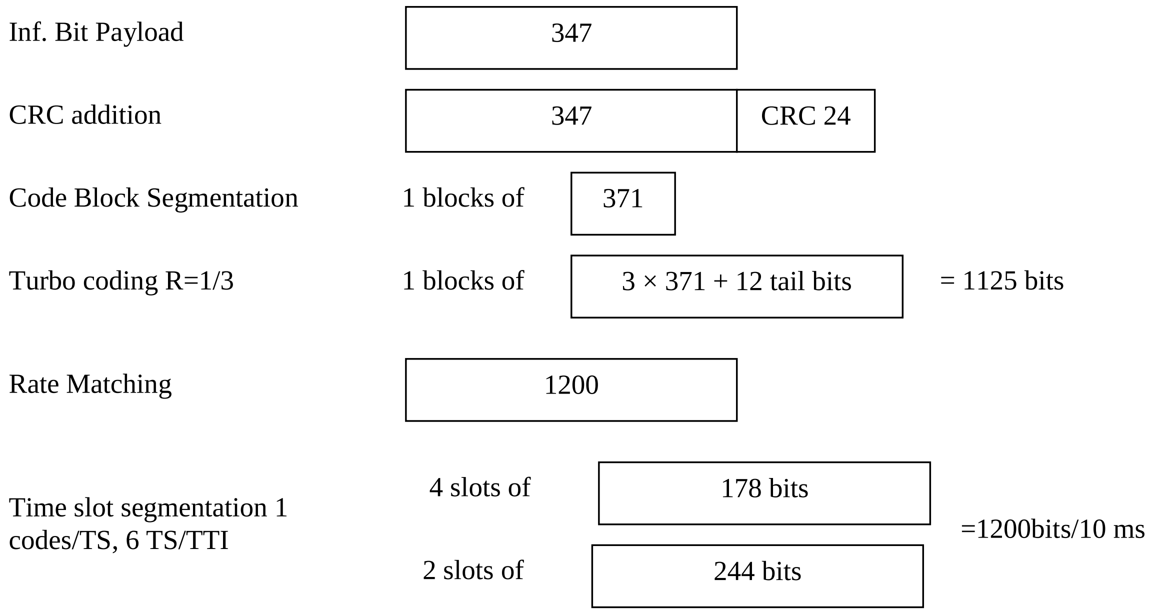
Inf. Bit Payload
347
CRC addition
347
CRC 24
Code Block Segmentation
1 blocks of
371
Turbo coding R=1/3
1 blocks of
3 × 371 + 12 tail bits
= 1125 bits
Rate Matching
1200
Time slot segmentation 1 codes/TS, 6 TS/TTI
4 slots of
178 bits
2 slots of
244 bits
=1200bits/10 ms

Figure A.9: Coding for E-DCH FRC1 (3.84 Mcps TDD Option)

A.3.1.1.2 Fixed Reference Channel 2 (FRC2)

Table A.7: E-DCH Fixed Reference Channel 2 (3.84 Mcps TDD Option)

Parameter	Unit	Value
Maximum information bit throughput	kbps	1083.1
Information Bit Payload (N_{INF})	Bits	10831
Number Code Blocks	Blocks	3
Number of coded bits per TTI	Bits	22272
Coding Rate		0.488
Modulation		16QAM
Number of E-DCH Timeslots	Slots	6
Number of E-DCH codes per TS	Codes	1
Spreading factor	SF	2
Number of E-UCCH per TTI		2

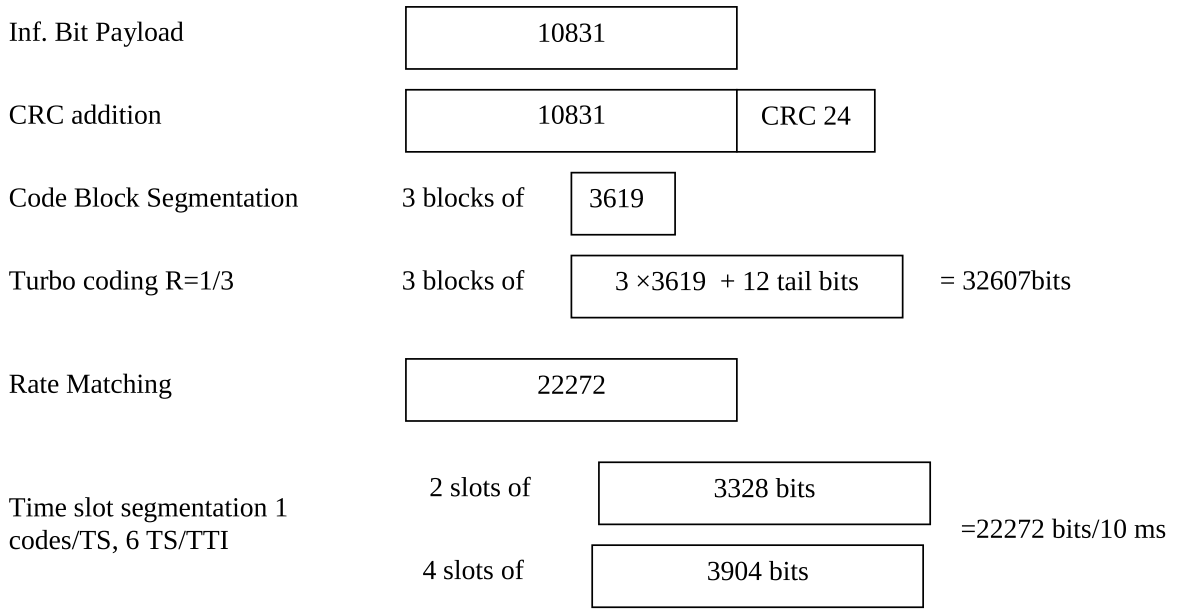
Inf. Bit Payload
10831
CRC addition
10831
CRC 24
Code Block Segmentation
3 blocks of
3619
Turbo coding R=1/3
3 blocks of
3 ×3619 + 12 tail bits
= 32607bits
Rate Matching
22272
Time slot segmentation 1 codes/TS, 6 TS/TTI
2 slots of
3328 bits
4 slots of
3904 bits
=22272 bits/10 ms

Figure A.10: Coding for E-DCH FRC2 (3.84 Mcps TDD Option)

A.3.1.1.3 Fixed Reference Channel 3 (FRC3)

Table A.8: E-DCH Fixed Reference Channel 3 (3.84 Mcps TDD Option)

Parameter	Unit	Value
Maximum information bit throughput	kbps	2073.7
Information Bit Payload (N_{INF})	Bits	20737
Number Code Blocks	Blocks	5
Number of coded bits per TTI	Bits	28992
Coding Rate		0.716
Modulation		16QAM
Number of E-DCH Timeslots	Slots	4
Number of E-DCH codes per TS	Codes	1
Spreading factor	SF	1
Number of E-UCCH per TTI		2

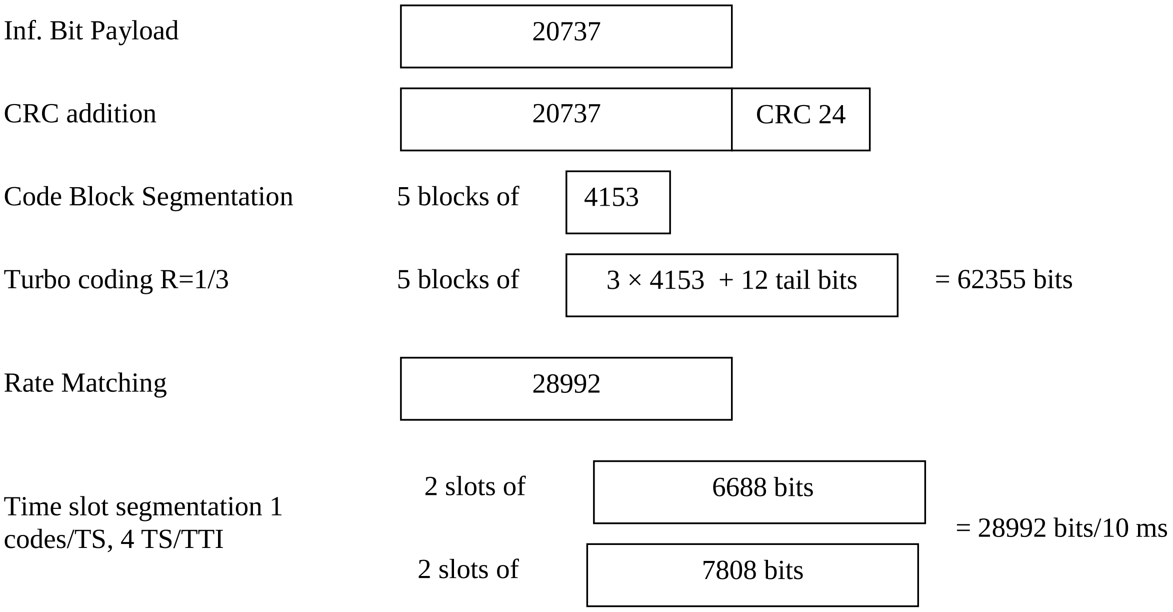
Inf. Bit Payload
20737
CRC addition
20737
CRC 24
Code Block Segmentation
5 blocks of
4153
Turbo coding R=1/3
5 blocks of
3 × 4153 + 12 tail bits
= 62355 bits
Rate Matching
28992
Time slot segmentation 1 codes/TS, 4 TS/TTI
2 slots of
6688 bits
2 slots of
7808 bits
= 28992 bits/10 ms

Figure A.11: Coding for E-DCH FRC3 (3.84 Mcps TDD Option)

A.3.1.2 1.28Mcps TDD Option

A3.1.2.1 Fixed reference channel 1 (FRC1)

Table A.9: E-DCH Fixed reference channel 1 (1.28Mcps TDD option)

Parameter	Unit	Value
Maximum information bit throughput	kbps	56.4
Information Bit Payload (N_{INF})	Bits	282
Number Code Blocks	Blocks	1
Number of coded bits per TTI	Bits	306
Coding Rate		0.4965
Modulation		QPSK
Number of E-DCH Timeslots	Slots	2
Number of E-DCH codes per TS	Codes	1
Spreading factor	SF	4
Number of E-UCCH per TTI		4

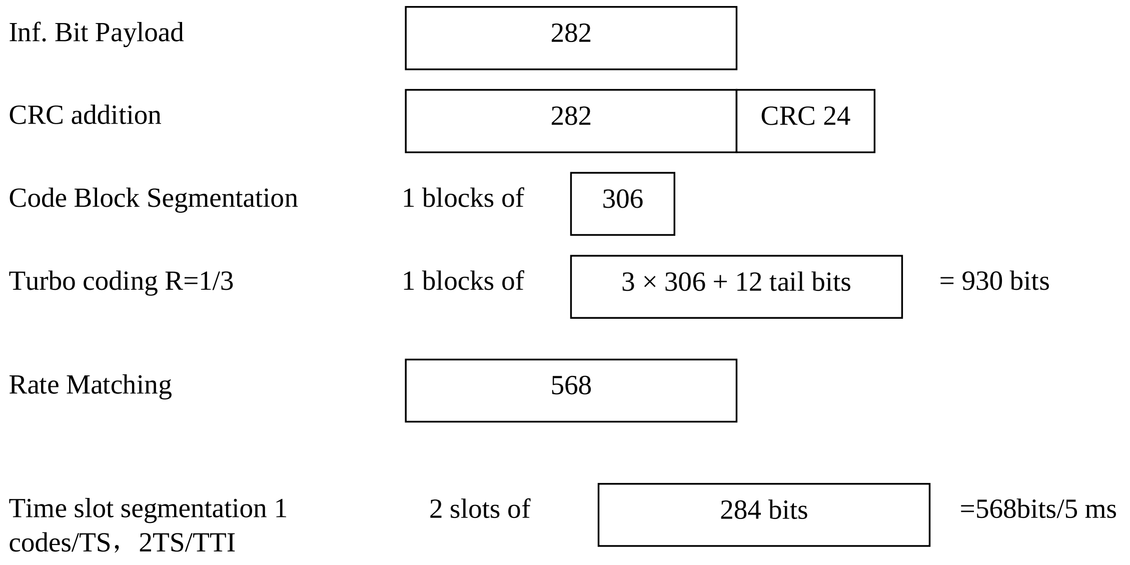
Inf. Bit Payload
282
CRC addition
282
CRC 24
Code Block Segmentation
1 blocks of
306
Turbo coding R=1/3
1 blocks of
3 × 306 + 12 tail bits
= 930 bits
Rate Matching
568
Time slot segmentation 1 codes/TS，2TS/TTI
2 slots of
284 bits
=568bits/5 ms

Figure A.12: Coding for E-DCH FRC1 (1.28 Mcps TDD Option)

A3.1.2.2 Fixed reference channel 2(FRC2)

Table A.10: E-DCH Fixed reference channel 2(1.28Mcps TDD option)

Parameter	Unit	Value
Maximum information bit throughput	kbps	227.8
Information Bit Payload (N_{INF})	Bits	1139
Number Code Blocks	Blocks	1
Number of coded bits per TTI	Bits	1163
Coding Rate		0.85
Modulation		QPSK
Number of E-DCH Timeslots	Slots	2
Number of E-DCH codes per TS	Codes	1
Spreading factor	SF	2
Number of E-UCCH per TTI		2

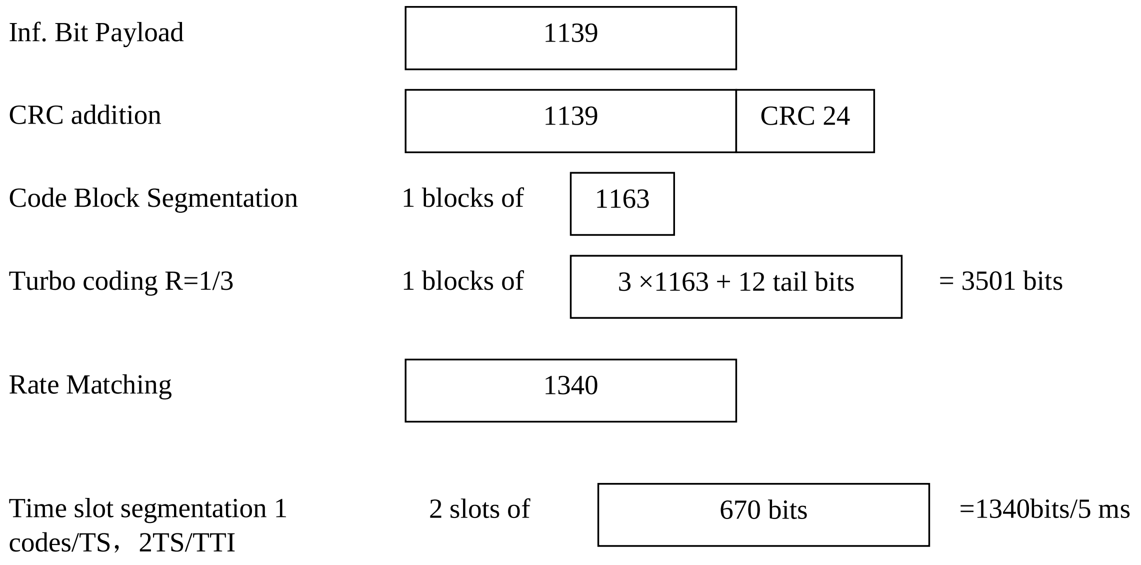
Inf. Bit Payload
1139
CRC addition
1139
CRC 24
Code Block Segmentation
1 blocks of
1163
Turbo coding R=1/3
1 blocks of
3 ×1163 + 12 tail bits
= 3501 bits
Rate Matching
1340
Time slot segmentation 1 codes/TS，2TS/TTI
2 slots of
670 bits
=1340bits/5 ms

Figure A.13: Coding for E-DCH FRC2 (1.28 Mcps TDD Option)

A3.1.2.3 Fixed reference channel 3(FRC3)

Table A.11: E-DCH Fixed reference channel 3 (1.28Mcps TDD option)

Parameter	Unit	Value
Maximum information bit throughput	kbps	489
Information Bit Payload (N_{INF})	Bits	2445
Number Code Blocks	Blocks	1
Number of coded bits per TTI	Bits	2469
Coding Rate		0.598
Modulation		16QAM
Number of E-DCH Timeslots	Slots	3
Number of E-DCH codes per TS	Codes	1
Spreading factor	SF	2
Number of E-UCCH per TTI		2

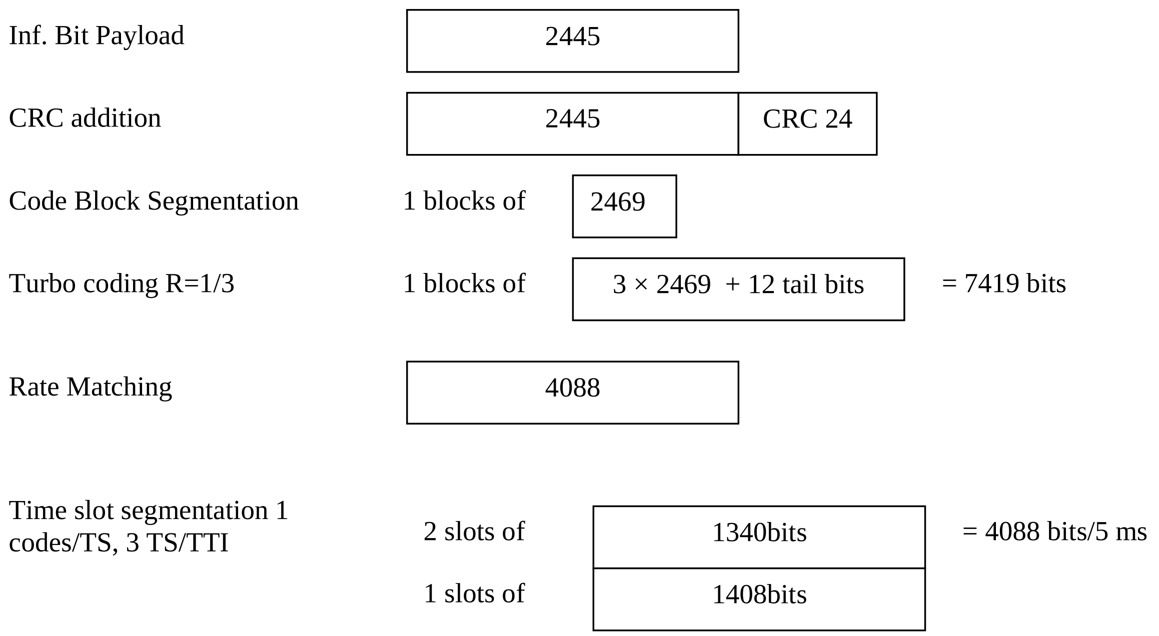
Inf. Bit Payload
2445
CRC addition
2445
CRC 24
Code Block Segmentation
1 blocks of
2469
Turbo coding R=1/3
1 blocks of
3 × 2469 + 12 tail bits
= 7419 bits
Rate Matching
4088
Time slot segmentation 1 codes/TS, 3 TS/TTI
2 slots of
1340bits
1 slots of
1408bits
= 4088 bits/5 ms

Figure A.14: Coding for E-DCH FRC3 (1.28 Mcps TDD Option)

A3.1.2.4 Fixed reference channel 4(FRC4)

Table A.12: E-DCH Fixed reference channel 4 (1.28Mcps TDD option)

Parameter	Unit	Value
Maximum information bit throughput	kbps	1281.2
Information Bit Payload (N_{INF})	Bits	6406
Number Code Blocks	Blocks	2
Number of coded bits per TTI	Bits	6430
Coding Rate		0.5757
Modulation		16QAM
Number of E-DCH Timeslots	Slots	4
Number of E-DCH codes per TS	Codes	1
Spreading factor	SF	1
Number of E-UCCH per TTI		2

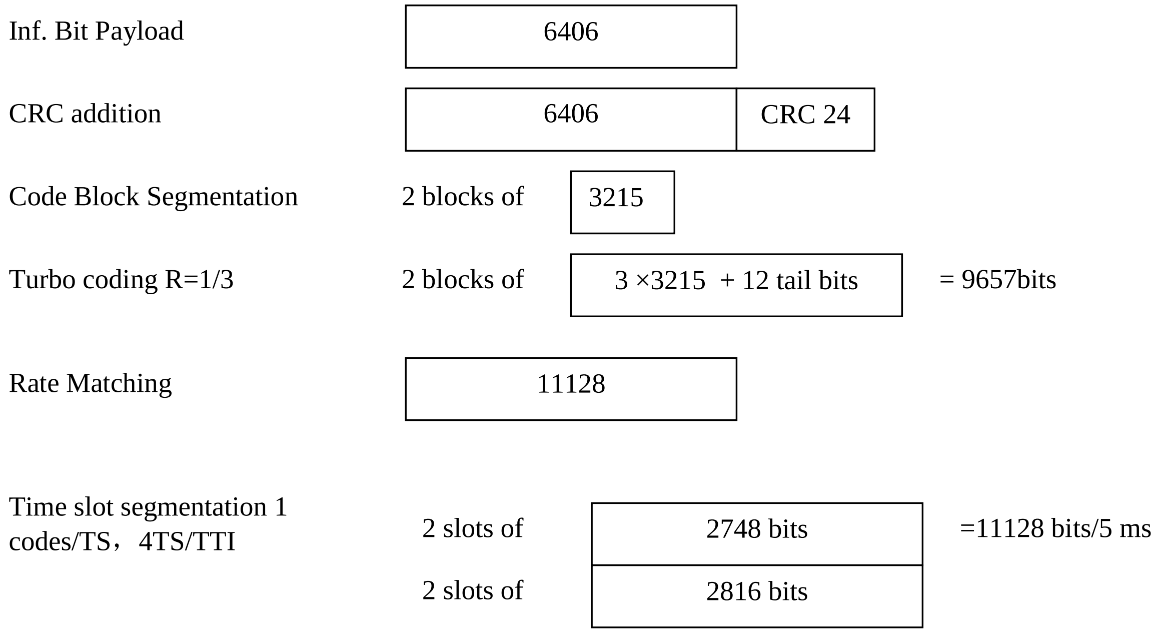
Inf. Bit Payload
6406
CRC addition
6406
CRC 24
Code Block Segmentation
2 blocks of
3215
Turbo coding R=1/3
2 blocks of
3 ×3215 + 12 tail bits
= 9657bits
Rate Matching
11128
Time slot segmentation 1 codes/TS，4TS/TTI
2 slots of
2748 bits
=11128 bits/5 ms
2 slots of
2816 bits

Figure A.15: Coding for E-DCH FRC4 (1.28 Mcps TDD Option)

A.3.1.3 7,68 Mcps TDD Option

A.3.1.3.1 Fixed Reference Channel 1 (FRC1)

Table A.13: E-DCH Fixed Reference Channel 1 (7.68 Mcps TDD Option)

Parameter	Unit	Value
Maximum information bit throughput	kbps	35.9
Information Bit Payload (N_{INF})	Bits	359
Number Code Blocks	Blocks	1
Number of coded bits per TTI	Bits	1200
Coding Rate		0.323
Modulation		QPSK
Number of E-DCH Timeslots	Slots	6
Number of E-DCH codes per TS	Codes	1
Spreading factor	SF	32
Number of E-UCCH per TTI		4

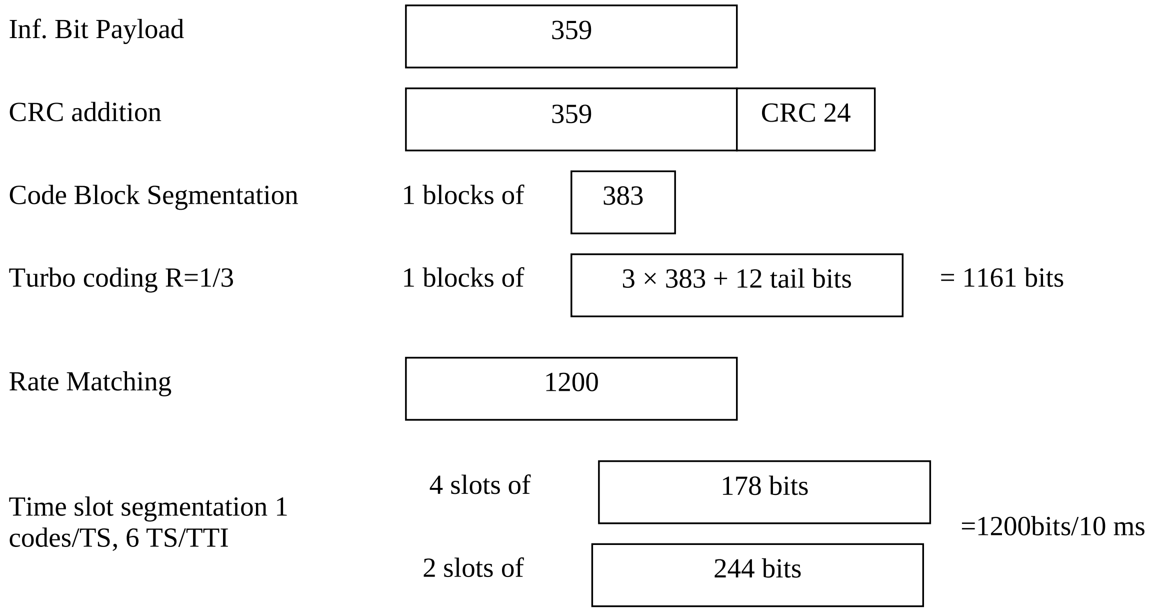
Inf. Bit Payload
359
CRC addition
359
CRC 24
Code Block Segmentation
1 blocks of
383
Turbo coding R=1/3
1 blocks of
3 × 383 + 12 tail bits
= 1161 bits
Rate Matching
1200
Time slot segmentation 1 codes/TS, 6 TS/TTI
4 slots of
178 bits
2 slots of
244 bits
=1200bits/10 ms

Figure A.16: Coding for E-DCH FRC1 (7.68 Mcps TDD Option)

A.3.1.3.2 Fixed Reference Channel 2 (FRC2)

Table A.14: E-DCH Fixed Reference Channel 2 (7.68 Mcps TDD Option)

Parameter	Unit	Value
Maximum information bit throughput	kbps	1083.1
Information Bit Payload (N_{INF})	Bits	10831
Number Code Blocks	Blocks	3
Number of coded bits per TTI	Bits	22272
Coding Rate		0.488
Modulation		16QAM
Number of E-DCH Timeslots	Slots	6
Number of E-DCH codes per TS	Codes	1
Spreading factor	SF	4
Number of E-UCCH per TTI		2

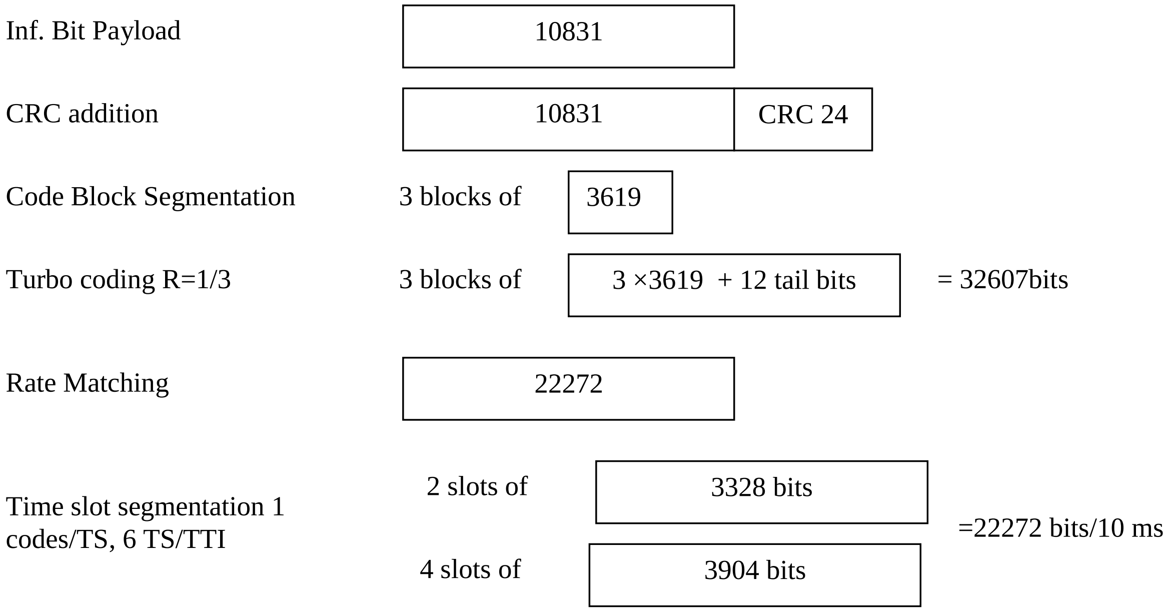
Inf. Bit Payload
10831
CRC addition
10831
CRC 24
Code Block Segmentation
3 blocks of
3619
Turbo coding R=1/3
3 blocks of
3 ×3619 + 12 tail bits
= 32607bits
Rate Matching
22272
Time slot segmentation 1 codes/TS, 6 TS/TTI
2 slots of
3328 bits
4 slots of
3904 bits
=22272 bits/10 ms

Figure A.17: Coding for E-DCH FRC2 (7.68 Mcps TDD Option)

A.3.1.3.3 Fixed Reference Channel 3 (FRC3)

Table A.15: E-DCH Fixed Reference Channel 3 (7.68 Mcps TDD Option)

Parameter	Unit	Value
Maximum information bit throughput	kbps	2085.1
Information Bit Payload (N_{INF})	Bits	20851
Number Code Blocks	Blocks	5
Number of coded bits per TTI	Bits	28992
Coding Rate		0.720
Modulation		16QAM
Number of E-DCH Timeslots	Slots	6
Number of E-DCH codes per TS	Codes	1
Spreading factor	SF	2
Number of E-UCCH per TTI		2

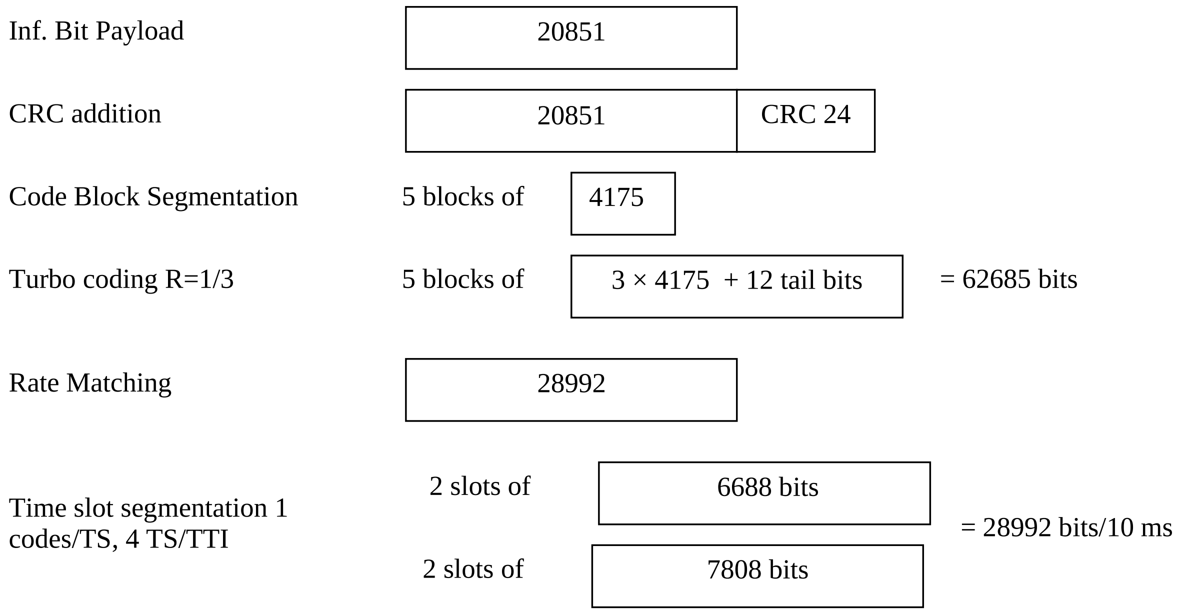
Inf. Bit Payload
20851
CRC addition
20851
CRC 24
Code Block Segmentation
5 blocks of
4175
Turbo coding R=1/3
5 blocks of
3 × 4175 + 12 tail bits
= 62685 bits
Rate Matching
28992
Time slot segmentation 1 codes/TS, 4 TS/TTI
2 slots of
6688 bits
2 slots of
7808 bits
= 28992 bits/10 ms

Figure A.18: Coding for E-DCH FRC3 (7.68 Mcps TDD Option)

A.4 HS-SICH Reference measurement channels

A.4.1 3.84 Mcps TDD Option

(void)

A.4.2 1.28 Mcps TDD Option

Table A.14: HS-SICH type1 Reference Channel 1 (1.28 Mcps TDD Option)

Parameter	Unit	Value
Information bits	bits	8
Encoded bits	bits	84
Number of codes	-	1
Number of timeslots	-	1
TTI	ms	5
Spreading Factor	SF	16

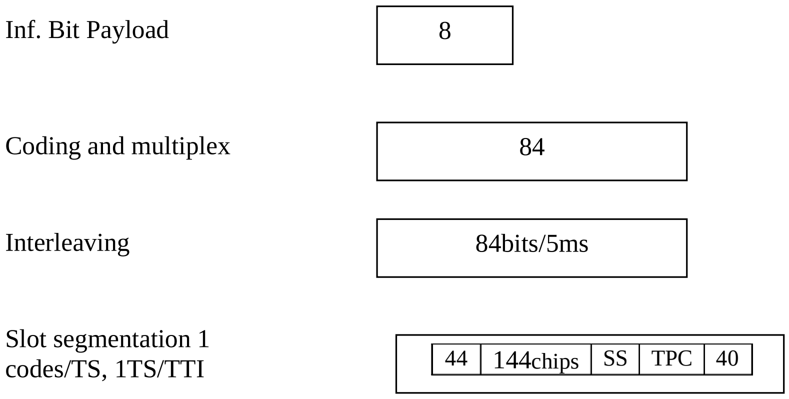
Inf. Bit Payload
8
Coding and multiplex
84
Interleaving
84bits/5ms
Slot segmentation 1 codes/TS, 1TS/TTI
44
144chips
SS
TPC
40

Figure A.14: Coding for HS-SICH type1 channel (1.28 Mcps TDD Option)

Table A.15: HS-SICH type2 Reference Channel 1 (1.28 Mcps TDD Option)

Parameter	Unit	Value
Information bits	bits	16
Encoded bits	bits	168
Number of codes	-	1
Number of timeslots	-	1
TTI	ms	5
Spreading Factor	SF	8

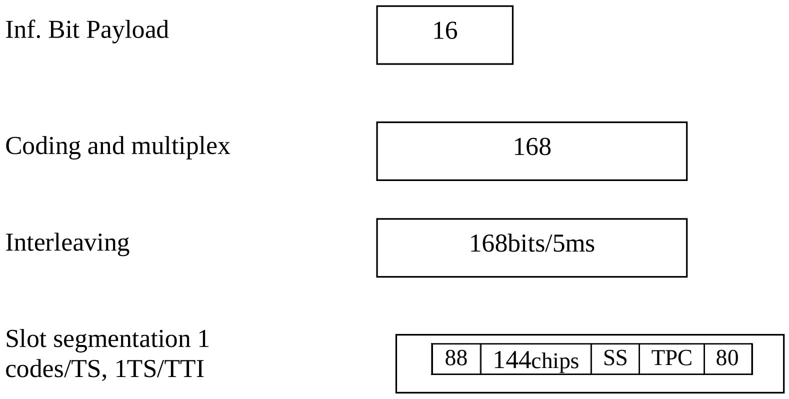
Inf. Bit Payload
16
Coding and multiplex
168
Interleaving
168bits/5ms
Slot segmentation 1 codes/TS, 1TS/TTI
88
144chips
SS
TPC
80

Figure A.15: Coding for HS-SICH type2 channel (1.28 Mcps TDD Option)

Annex B (normative): Propagation conditions

B.1 Static propagation condition

The propagation for the static performance measurement is an Additive White Gaussian Noise (AWGN) environment. No fading and multi-paths exist for this propagation model.

B.2 Multi-path fading propagation conditions

B.2.1 3,84 Mcps TDD Option

Table B1 shows propagation conditions that are used for the performance measurements in multi-path fading environment. All taps have classical Doppler spectrum, defined as:

(CLASS) $S(f) \propto 1/(1-(f/f_D)^2)^{0.5}$ for f $\in$ -f_d, f_d.

Table B.1: Propagation Conditions for Multi path Fading Environments for operations referenced in 5.2 a), 5.2 b) and 5.2 c)

Case 1, speed 3km/h		Case 2, speed 3 km/h		Case 3, 120 km/h	
Relative Delay [ns]	Relative Mean Power [dB]	Relative Delay [ns]	Relative Mean Power [dB]	Relative Delay [ns]	Relative Mean Power [dB]
0	0	0	0	0	0
976	-10	976	0	260	-3
		12000	0	521	-6
				781	-9

Table B.1A: Propagation Conditions for Multi path Fading Environments for operations referenced in 5.2 d)

Case 1, speed 2.3km/h		Case 2, speed 2.3 km/h		Case 3, 92 km/h	
Relative Delay [ns]	Relative Mean Power [dB]	Relative Delay [ns]	Relative Mean Power [dB]	Relative Delay [ns]	Relative Mean Power [dB]
0	0	0	0	0	0
976	-10	976	0	260	-3
		12000	0	521	-6
				781	-9

B.2.2 1,28 Mcps TDD Option

TableB2 shows propagation conditions that are used for the performance measurements in multi-path fading environment. All taps have classical Doppler spectrum, defined as:

(CLASS) $S(f) \propto 1/(1-(f/f_D)^2)^{0.5}$ for f $\in$ -f_d, f_d.

TableB.2: Propagation Conditions for Multi-Path Fading Environments

Case 1		Case 2		Case 3	
Speed for operating in band a, b, c, d 3km/h		Speed for operating in band a, b, c, d: 3km/h		Speed for operating in band a, b, c, d: 120km/h	
Speed for operating in band d: 2.3km/h		Speed for operating in band d: 2.3km/h		Speed for operating in band d: 92km/h	
Speed for operating in band e: 2.6km/h		Speed for operating in band e: 2.6km/h		Speed for operating in band e: 102km/h	
Relative Delay [ns]	Relative Mean Power [dB]	Relative Delay [ns]	Relative Mean Power [dB]	Relative Delay [ns]	Relative Mean Power [dB]
0	0	0	0	0	0
2928	-10	2928	0	781	-3
		12000	0	1563	-6
				2344	-9

Table B.2A: Propagation Conditions for Multipath Fading Environments for E-DCH Performance Requirements for 1,28 Mcps TDD

ITU Pedestrian A Speed 3km/h (PA3)		ITU Pedestrian B Speed 3km/h (PB3)		ITU vehicular A Speed 30km/h (VA30)	
Speed for operating in band a, b, c, d: 3km/h		Speed for operating in band a, b, c, d 3km/h		Speed for operating in band a, b, c, d: 30km/h	
Speed for operating in band d: 2.3km/h		Speed for operating in band d: 2.3km/h		Speed for operating in band d: 23km/h	
Speed for operating in band e: 2.6km/h		Speed for operating in band e: 2.6km/h		Speed for operating in band e: 26km/h	
Relative Delay [ns]	Relative Mean Power [dB]	Relative Delay [ns]	Relative Mean Power [dB]	Relative Delay [ns]	Relative Mean Power [dB]
0	0	0	0	0	0
110	-9.7	200	-0.9	310	-1.0
190	-19.2	800	-4.9	710	-9.0
410	-22.8	1200	-8.0	1090	-10.0
		2300	-7.8	1730	-15.0
		3700	-23.9	2510	-20.0
Note: For MC-HSUPA requirements, the fading of the signals for each carrier shall be independent.					

B.2.3 7,68 Mcps TDD Option

Table B3 shows propagation conditions that are used for the performance measurements in multi-path fading environment. All taps have classical Doppler spectrum, defined as:

(CLASS) $$S(f) \propto 1/(1-(f/f_D)^2)^{0.5}$$ for f ∈ -f_d, f_d.

Table B.3: Propagation Conditions for Multi path Fading Environments for operations referenced in 5.2 a), 5.2 b) and 5.2 c)

Case 1, speed 3km/h		Case 2, speed 3 km/h		Case 3, 120 km/h	
Relative Delay [ns]	Relative Mean Power [dB]	Relative Delay [ns]	Relative Mean Power [dB]	Relative Delay [ns]	Relative Mean Power [dB]
0	0	0	0	0	0
976	-10	976	0	260	-3
		12000	0	521	-6
				781	-9

Table B.3A: Propagation Conditions for Multi path Fading Environments for operations referenced in 5.2 d)

Case 1, speed 2.3km/h		Case 2, speed 2.3 km/h		Case 3, 92 km/h	
Relative Delay [ns]	**Relative Mean Power [dB]**	**Relative Delay [ns]**	**Relative Mean Power [dB]**	**Relative Delay [ns]**	**Relative Mean Power [dB]**
0	0	0	0	0	0
976	-10	976	0	260	-3
		12000	0	521	-6
				781	-9

B.3 High speed train conditions

High speed train conditions are as follows:

Scenario 1: Open space

Scenario 3: Tunnel for multi-antennas

The high speed train conditions for the test of the baseband performance are two non-fading propagation channels in both scenarios.

Doppler shift for both scenarios is given by:

$$f_s(t) = f_d \cos\theta(t) \tag{B.1}$$

where $f_s(t)$ is the Doppler shift and f_d is the maximum Doppler frequency. The cosine of angle $\theta(t)$ is given by:

$$\cos\theta(t) = \frac{D_s/2 - vt}{\sqrt{D_{\min}{}^2 + (D_s/2 - vt)^2}},\ 0 \le t \le D_s/v \tag{B.2}$$

$$\cos\theta(t) = \frac{-1.5D_s + vt}{\sqrt{D_{\min}{}^2 + (-1.5D_s + vt)^2}},\ D_s/v < t \le 2D_s/v \tag{B.3}$$

$$\cos\theta(t) = \cos\theta(t \mod (2D_s/v)),\ t > 2D_s/v \tag{B.4}$$

where $D_s/2$ is the initial distance of the train from BS, and $D_{\min}$ is BS-Railway track distance, both in meters; v is the velocity of the train in m/s, t is time in seconds.

Doppler shift and cosine angle is given by equation B.1 and B.2-B.4 respectively, where the required input parameters listed in table B.4 and the resulting Doppler shift shown in Figure B.1 and B.2 are applied for all frequency bands.

Table B.4: Parameters for high speed train conditions

Parameter	Value	
	Scenario 1	**Scenario 3**
D_s	1000 m	300 m
$D_{\min}$	50 m	2 m
v	350 km/h	300 km/h
f_d	1310 Hz	1125 Hz

NOTE1: Parameters for HST conditions in table B. including f_d and Doppler shift trajectories presented on figures B.1 and B.2 were derived for Band a).

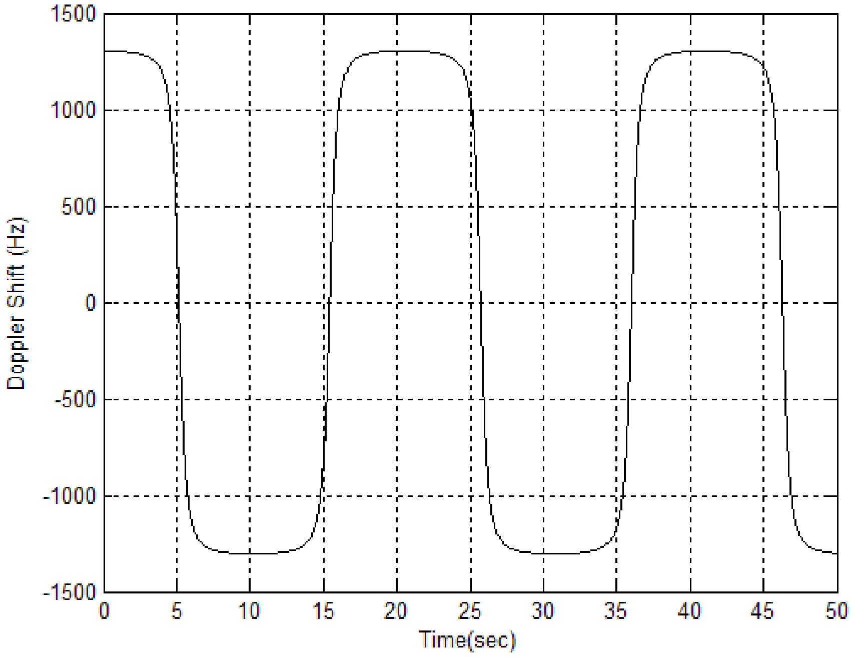

Figure B.1: Doppler shift trajectory for scenario 1

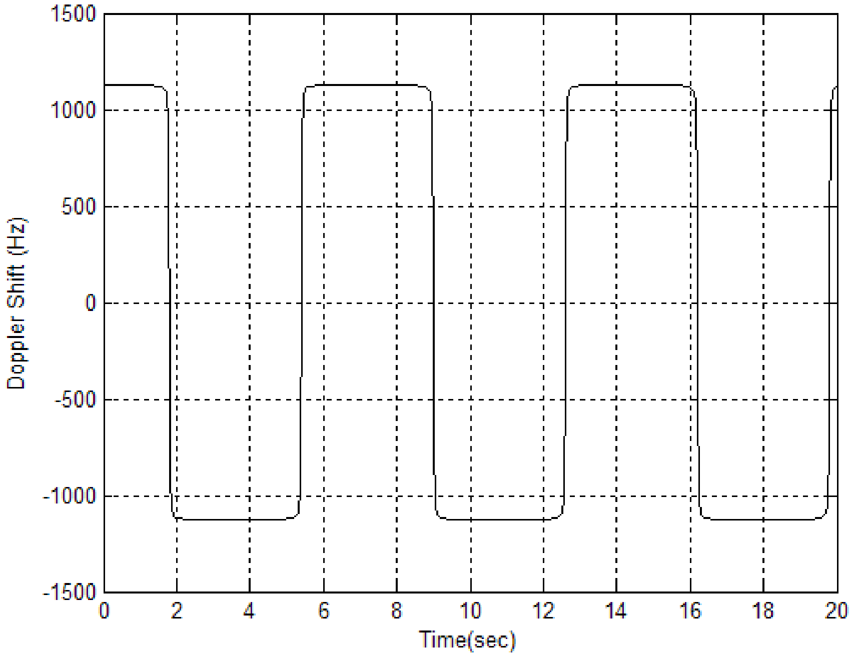

Figure B.2: Doppler shift trajectory for scenario 3

Annex C (informative): Change history

TSG	Doc	CR	R	Title	Cat	Curr	New	Work Item
RP-29				Creation of Rel-7 version based on v6.2.2.			7.0.0	
RP-29	RP-050502	0161		Introduction of UMTS 2.6 GHz operating band for TDD	B	6.2.0	7.0.0	RInImp-UMTS2600TDD
RP-29	RP-050502	0162		UMTS 2.6 GHz TDD Propagation Conditions	B	6.2.0	7.0.0	RInImp-UMTS2600TDD
RP-29	RP-050502	0163	2	Channel Raster for 3.84 Mcps TDD in UMTS 2.6 GHz	B	6.2.0	7.0.0	RInImp-UMTS2600TDD
RP-29	RP-050502	0164		UMTS 2.6 GHz TDD BS Transmitter Specifications	B	6.2.0	7.0.0	RInImp-UMTS2600TDD
RP-29	RP-050502	0165		UMTS 2.6 GHz TDD BS Receiver Specifications	B	6.2.0	7.0.0	RInImp-UMTS2600TDD
RP-29	RP-050502	0166		Introduction of Propagation Conditions for UMTS 2.6 GHz for 1.28Mcps TDD	B	6.2.0	7.0.0	RInImp-UMTS2600TDD
RP-29	RP-050648	0167	1	UMTS 2.6 GHz TDD BS Receiver Spurious Emission	B	6.2.0	7.0.0	RInImp-UMTS2600TDD
RP-30	RP-050740	0168		Introduction of UMTS 2.6 BS transmitter specification for 1.28Mcps TDD	B	7.0.0	7.1.0	RInImp-UMTS2600TDD
RP-30	RP-050740	0169		Introduction of UMTS 2.6 BS receiver specification for 1.28Mcps TDD	B	7.0.0	7.1.0	RInImp-UMTS2600TDD
RP-31	RP-060310	0170	1	7.68 Mcps - Frequency Bands & Channel Arrangement	B	7.1.0	7.2.0	VHCRTDD-RF
RP-31	RP-060310	0171		7.68 Mcps BS Transmitter Characteristics	B	7.1.0	7.2.0	VHCRTDD-RF
RP-31	RP-060310	0172		7.68 Mcps BS Receiver Characteristics	B	7.1.0	7.2.0	VHCRTDD-RF
RP-31	RP-060310	0173		7.68 Mcps - Channel Performance	B	7.1.0	7.2.0	VHCRTDD-RF
RP-31	RP-060310	0174		7.68 Mcps Measurement Channels & Propagation Conditions	B	7.1.0	7.2.0	VHCRTDD-RF
RP-33	RP-060517	0187		Clarification of Tx spurious emission level from 3.84 Mcps and 7.68 Mcps TDD BS into PHS band	F	7.2.0	7.3.0	TEI7
RP-33	RP-060518	0194	1	Clarification on the deployment of UTRA TDD in Japan	A	7.2.0	7.3.0	TEI
RP-33	RP-060519	0196	1	Tx and Rx Spurious Emission from 3.84 Mcps and 7.68 Mcps TDD BS into FDD bands in Japan	A	7.2.0	7.3.0	TEI6
RP-33	RP-060528	0188		Performance requirements for 3.84 Mcps E-DCH channel.	F	7.2.0	7.3.0	EDCHTDD-RF
RP-33	RP-060526	0189	1	7.68 Mcps Operations in 2.6 GHz band	F	7.2.0	7.3.0	RInImp-UMTS26VHCRTDD
RP-34	RP-060818	0197		Performance requirements for 7.68 Mcps E-DCH channel.	B	7.3.0	7.4.0	TEI7
RP-35	RP-070081	0205		Introdution of HS-SICH detection performance for 1.28Mcps TDD	A	7.4.0	7.5.0	TEI6
RP-35	RP-070082	0200		Tx and Rx Spurious Emission from 7.68 Mcps TDD BS into FDD band in Japan	F	7.4.0	7.5.0	TEI7
RP-35	RP-070082	0201		Clarification on the deployment of UTRA TDD in Japan	F	7.4.0	7.5.0	TEI7

RP-36	RP-070369	0211		Modifying category B spurious emission limits for UTRA TDD BS	A	7.5.0	7.6.0	TEI
RP-36	RP-070377	0207		Adding the E-DCH performance requirement for 1.28Mcps TDD option	B	7.5.0	7.6.0	LCRTDD-EDCH-RF
RP-37	RP-070651	0212		Inclusion of 7.68 Mcps in the scope of document	D	7.6.0	7.7.0	TEI7
RP-39	RP-080117	0220	1	Modifying category B spurious emission limits for UTRA TDD BS	A	7.7.0	7.8.0	TEI
RP-39	RP-080119	0215	1	Correcting the power allocation for HS-SICH performance detection	A	7.7.0	7.8.0	TEI6
RP-40	RP-080329	0227	1	RCDE for 1.28Mcps TDD 64QAM modulated codes	B	7.8.0	7.9.0	RANimp-64Qam1.28TDD
RP-40	RP-080384	0226	1	UMTS2300MHz propagation channel model addition for 1.28Mcps TDD in 25.105	B	7.9.0	8.0.0	RInImp8-UMTS2300TDD
RP-40	RP-080384	0225		UMTS2300MHz Receiver performance addition for 1.28Mcps TDD in 25.105	B	7.9.0	8.0.0	RInImp8-UMTS2300TDD
RP-40	RP-080384	0224		UMTS2300MHz Transmitter performance addition for 1.28Mcps TDD in 25.105	B	7.9.0	8.0.0	RInImp8-UMTS2300TDD
RP-40	RP-080384	0223	1	UMTS2300MHz New band introduction for 1.28Mcps TDD in 25.105	B	7.9.0	8.0.0	RInImp8-UMTS2300TDD
RP-41	RP-080636	0229		Modify the Fixed Reference Channels of E-DCH for LCR TDD	F	8.0.0	8.1.0	TEI7
RP-42	RP-080900	235	1	BS reference measurement channel and performance requirement for 384kbps service	A	8.1.0	8.2.0	TEI4
RP-42	RP-080939	236		Introduction of band 1880MHz	B	8.1.0	8.2.0	RinImp9-UMTS1880TDD
RP-43	RP-090194	239		Introduction of 3.84Mcps TDD MBSFN IMB	B	8.2.0	8.3.0	MBSFN-DOB
RP-43	RP-090197	237		UMTS1880MHz: transmitter characteristic	F	8.2.0	8.3.0	RInImp9-UMTS1880TDD
RP-43	RP-090197	238		UMTS1880MHz: receiver characteristic and propagation conditions	F	8.2.0	8.3.0	RInImp9-UMTS1880TDD
RP-43	RP-090199	240		Adding Time alignment error requirements for LCR TDD Base Station MIMO	F	8.2.0	8.3.0	RANimp-MIMOLCR
				Updated history table		8.3.0	8.3.1	
RP-44	RP-090553	242		Correction of local area base station coexistence requirements	F	8.3.1	8.4.0	RInImp9-UMTS1880TDD
RP-44	RP-090554	241		HS-SICH Type2 performance for 1.28Mcps TDD MIMO	F	8.3.1	8.4.0	RANimp-LCRMIMO
RP-45	RP-090818	246		Aligning IMB BS conformance requirements between 25.105 and 25.142	F	8.4.0	8.5.0	MBSFN-DOB
RP-46	RP-091285	247		BS performance requirements in high speed train condition for LCR TDD (Technically endorsed at RAN 4 52bis in R4-093541)	B	8.5.0	9.0.0	RInImp9-LCRTDD350

RP-47	RP-100257	255		Correction of E-DCH FRC3 for LCR TDD	A	9.0.0	9.1.0	TEI7
RP-47	RP-100253	266		Protection of E-UTRA for UTRA TDD BS	A	9.0.0	9.1.0	LTE-RF
RP-47	RP-100273	252		Additional performance requirements in high speed train conditions for LCR TDD	F	9.0.0	9.1.0	RInImp9-LCRTDD350
RP-48	RP-100633	274	2	The Intermodulation of 1.28Mcps TDD Home NodeB receiver in 25.105	B	9.1.0	10.0.0	HNB_LCRTDD_RF
RP-48	RP-100633	273		The blocking of 1.28Mcps TDD Home NodeB receiver in 25.105	B	9.1.0	10.0.0	HNB_LCRTDD_RF
RP-48	RP-100633	272		The ACS of 1.28Mcps TDD Home NodeB receiver in 25.105	B	9.1.0	10.0.0	HNB_LCRTDD_RF
RP-48	RP-100633	271	1	The dynamic Range of 1.28Mcps TDD Home NodeB receiver in 25.105	B	9.1.0	10.0.0	HNB_LCRTDD_RF
RP-48	RP-100633	270		The sensitivity of 1.28Mcps TDD Home NodeB receiver in 25.105	B	9.1.0	10.0.0	HNB_LCRTDD_RF
RP-48	RP-100633	269		The frequency stability of 1.28Mcps TDD Home NodeB transmitter in 25.105	B	9.1.0	10.0.0	HNB_LCRTDD_RF
RP-48	RP-100633	267	1	Add Home NodeB class into Base Station class in 25.105	B	9.1.0	10.0.0	HNB_LCRTDD_RF
RP-48	RP-100633	268	1	The output power of 1.28Mcps TDD Home NodeB transmitter in 25.105	B	9.1.0	10.0.0	HNB_LCRTDD_RF
RP-48	RP-100633	275	1	The performance Requirement of 1.28Mcps TDD Home NodeB receiver in 25.105	B	9.1.0	10.0.0	HNB_LCRTDD_RF
RP-50	RP-101351	277	1	Introduction of the BS requirements for 1.28Mcps TDD MC-HSUPA	B	10.0.0	10.1.0	TDD_MC_HSUPA
RP-51	RP-110352	0279	1	Harmonization of co-existence/co-location requirements between 25.105 and 36.104	F	10.1.0	10.2.0	TEI10
RP-52	RP-110796	280		Correction of the test port description for TS 25.105	F	10.2.0	10.3.0	TEI10
RP-56	RP-120783	84		Update to regional requirement table	F	10.3.0	10.4.0	TEI10
RP-56	RP-120765	290		Additional spurious emissions requirements for PHS	A	10.3.0	10.4.0	TEI8
RP-56	RP-120793	287		Introduction of Band 44	B	10.4.0	11.0.0	LTE_APAC700-Core
RP-56	RP-120795	286		Co-existence/co-location between LA TDD systems	F	10.4.0	11.0.0	TEI11
RP-56	RP-120795	281	1	TDD blocking for co-location	F	10.4.0	11.0.0	TEI11
RP-56	RP-120795	283	1	Co-existence between TDD systems	F	10.4.0	11.0.0	TEI11
RP-56	RP-120795	282	1	WA co-existence/co-location	F	10.4.0	11.0.0	TEI11
RP-56	RP-120795	285		LA co-existence/co-location	F	10.4.0	11.0.0	TEI11
RP-57	RP-121296	294		Clarification for TDD band	A	11.0.0	11.1.0	TEI8
RP-58	RP-121905	295	1	Introduction of requirements for BS capable of multi-band operation	B	11.1.0	11.2.0	MB_MSR_RF-Core
RP-59	RP-130287	297		Update of BS co-existence requirement towards UTRA TDD bands in China	F	11.2.0	11.3.0	TEI11
RP-59	RP-130282	296	1	Introduction of remaining requirements for multi-band operation	B	11.2.0	11.3.0	MB_MSR_RF-Perf
RP-60	RP-130769	299	1	Introduction of remaining requirements for multi-band operation	B	11.3.0	11.4.0	MB_MSR_RF-Perf
RP-60	RP-130768	300	1	On additional ACLR requirement	F	11.3.0	11.4.0	TEI11
RP-60	RP-130764	301		Co-existence around 3500 MHz	F	11.3.0	11.4.0	RInImp8-UMTSLTE3500
RP-60	RP-130768	302		Rel.11 CR for 25.105: Editorial Corrections	F	11.3.0	11.4.0	TEI11
RP-60	RP-130768	303	1	Addition of MC-HSDPA for general clause 6.1	F	11.3.0	11.4.0	TEI11
RP-61	RP-131289	304		Updates to requirements for BS capable of multi-band operation	F	11.4.0	11.5.0	MB_MSR_RF-Perf
RP-62	RP-131930	305	1	Corrections to requirements for multi-band operation	F	11.5.0	11.6.0	MB_MSR_RF-Core
RP-65	RP-141528	308		Clarification on definitions in TS25.105	F	11.6.0	11.7.0	MB_MSR_RF-Core

RP-65	RP-141528	309		Multi-carrier and multi-band requirements update	F	11.6.0	11.7.0	MB_MSR_RF-Core
RP-65	-	-	-	Update to Rel-12 version (MCC)	-	11.7.0	12.0.0	
RP-66	RP-142146	311		Correction on transmitter intermodulation requirement related to multi-band operation	A	12.0.0	12.1.0	MB_MSR_RF-Core

History

Document history		
V12.0.0	October 2014	Publication
V12.1.0	January 2015	Publication