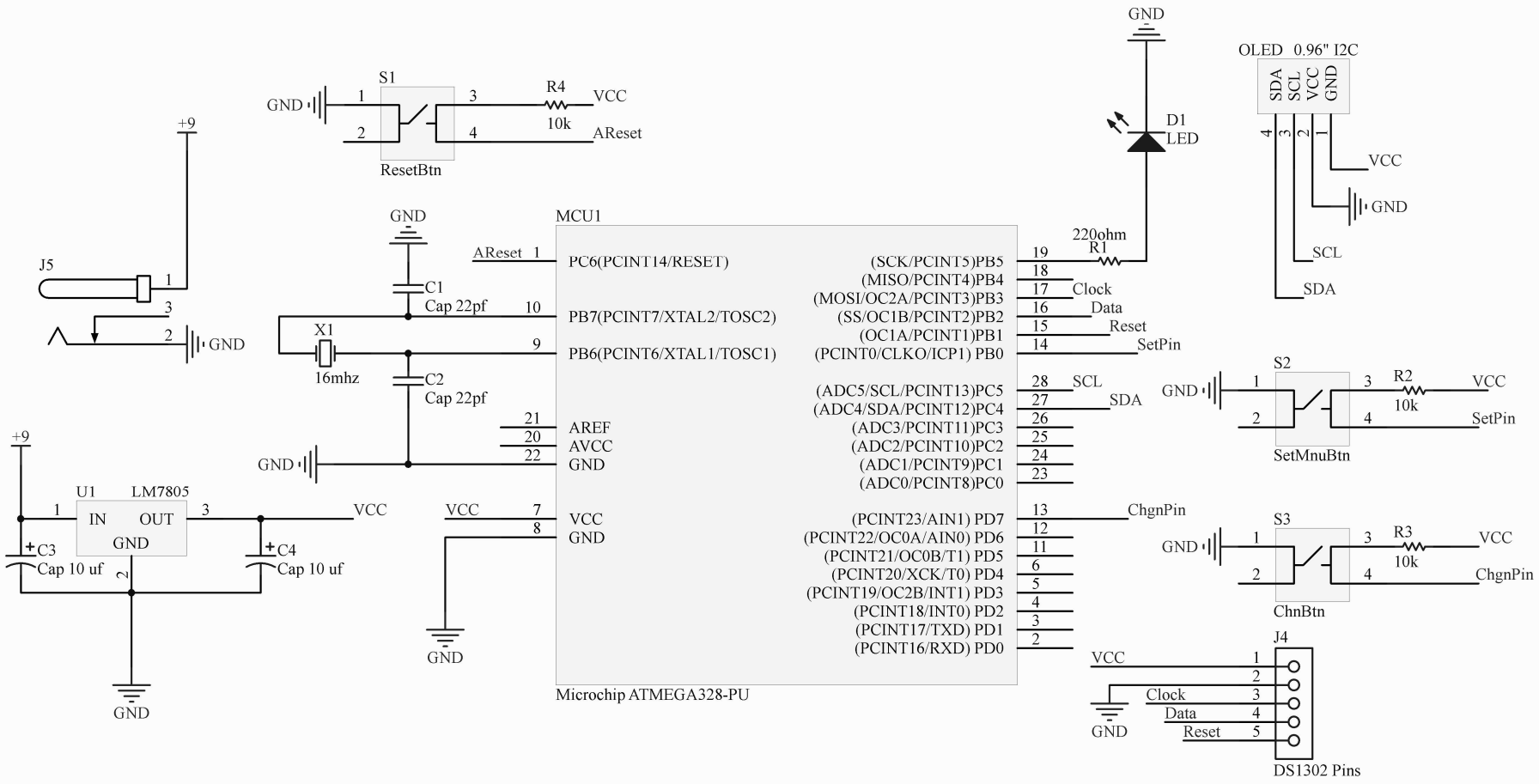

Title	Arduino OLED DS1302 RTC Clock with 2 Button Menu	
Size A	Number	Revision 2
Date: 3/17/2019		Sheet 1 of 1
File: ArduinoDS1302OLED.SchDoc		Drawn By: Michael D. Hayslip