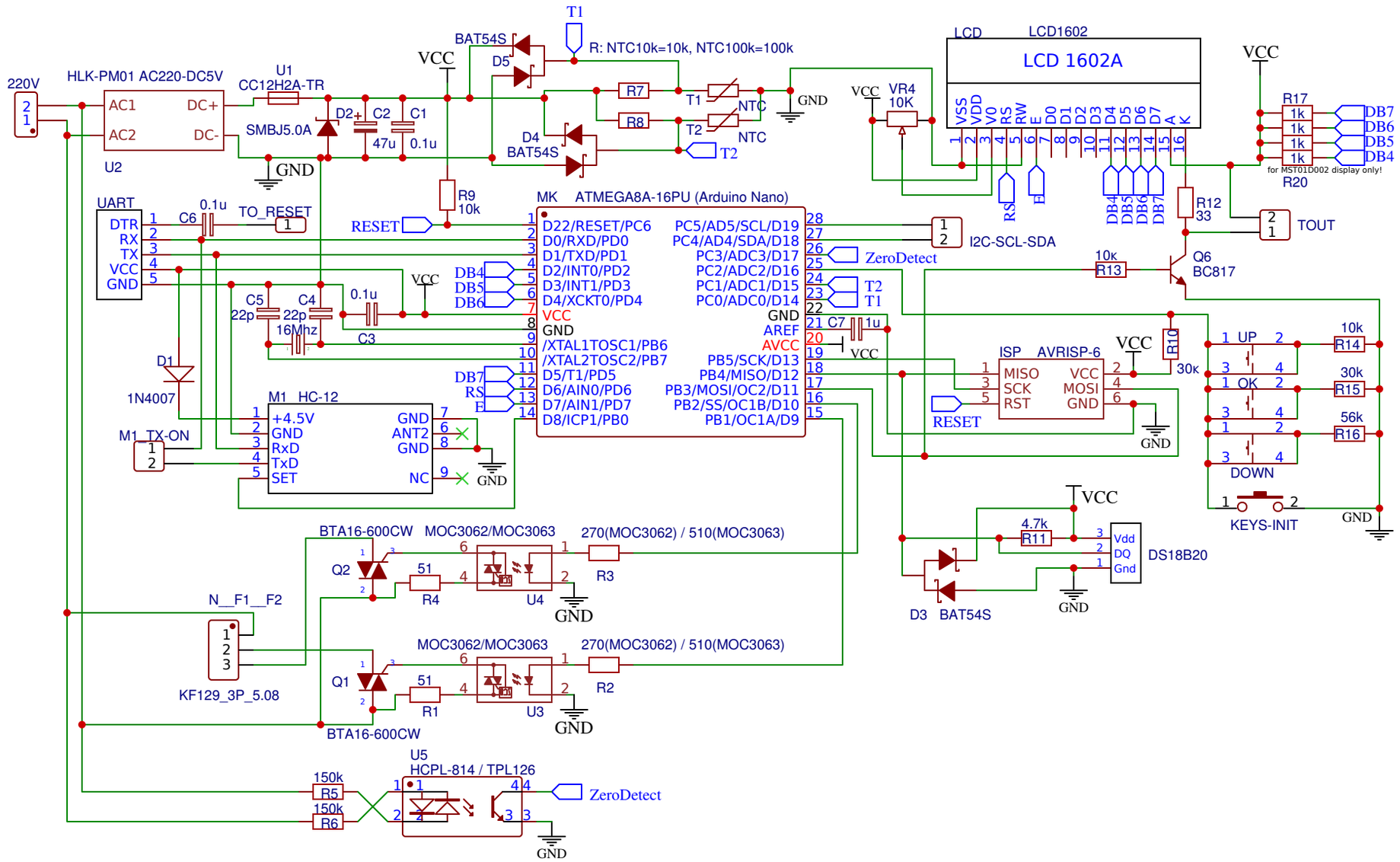

TITLE: Fancoil control		REV: 1.1
EasyEDA	Company: vad7@yahoo.com	Sheet: 1/1
	Date: 2019-07-16 Drawn By: vad7	