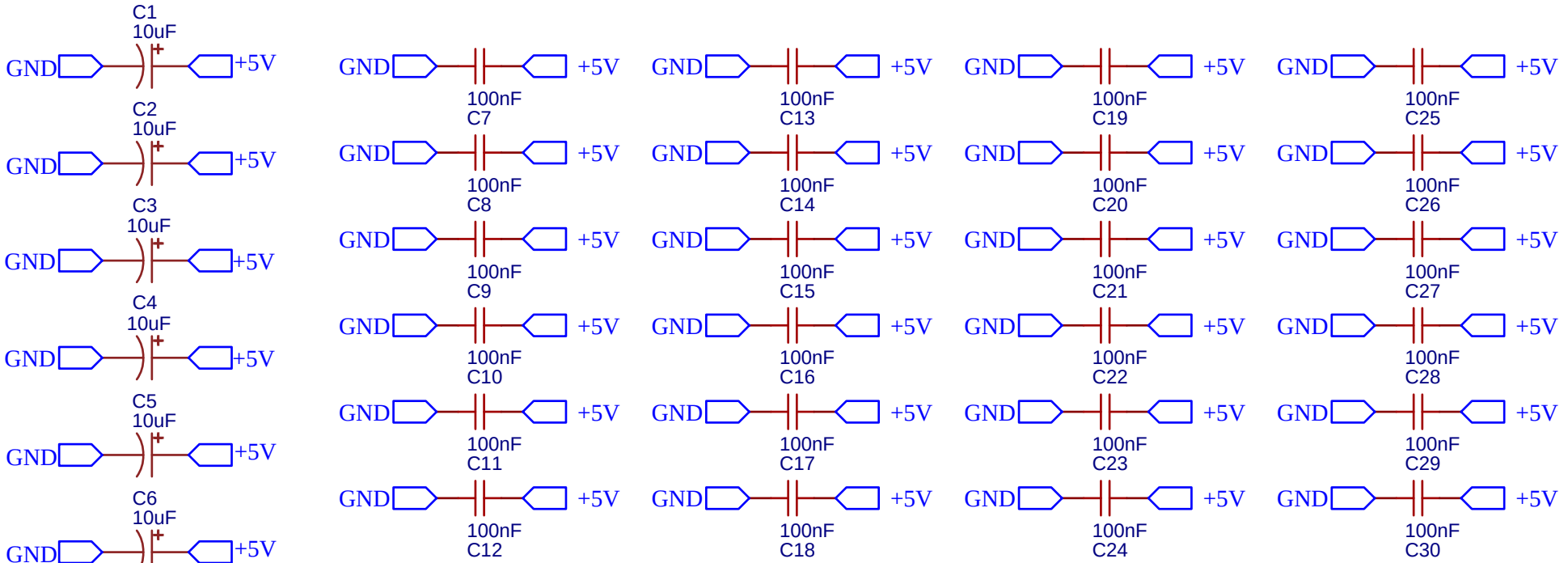
C1
10uF
GND
+5V
C2
10uF
GND
+5V
C3
10uF
GND
+5V
C4
10uF
GND
+5V
C5
10uF
GND
+5V
C6
10uF
GND
+5V
GND
+5V
100nF
C7
GND
+5V
100nF
C8
GND
+5V
100nF
C9
GND
+5V
100nF
C10
GND
+5V
100nF
C11
GND
+5V
100nF
C12
GND
+5V
100nF
C13
GND
+5V
100nF
C14
GND
+5V
100nF
C15
GND
+5V
100nF
C16
GND
+5V
100nF
C17
GND
+5V
100nF
C18
GND
+5V
100nF
C19
GND
+5V
100nF
C20
GND
+5V
100nF
C21
GND
+5V
100nF
C22
GND
+5V
100nF
C23
GND
+5V
100nF
C24
GND
+5V
100nF
C25
GND
+5V
100nF
C26
GND
+5V
100nF
C27
GND
+5V
100nF
C28
GND
+5V
100nF
C29
GND
+5V
100nF
C30