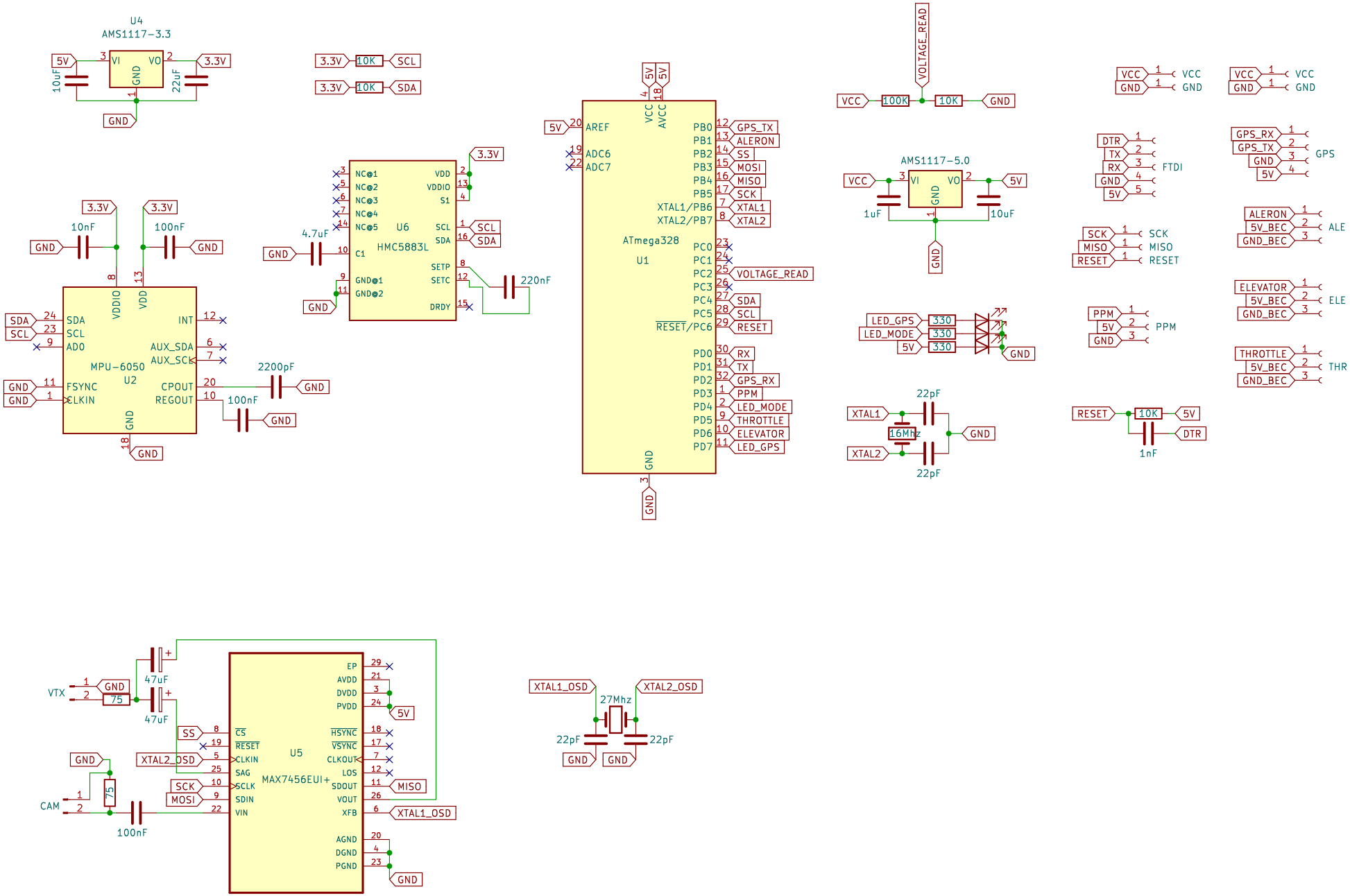
U4
AMS1117-3.3
5V
VI
VO
GND
3.3V
10uF
22uF
3.3V 10K SCL
3.3V 10K SDA
U6
HMC5883L
NC@1
NC@2
NC@3
NC@4
NC@5
C1
GND@1
GND@2
VDD
VDDIO
S1
SCL
SDA
SETP
SETC
DRDY
4.7uF
220nF
10nF
100nF
MPU-6050
U2
SDA
SCL
AD0
FSYNC
CLKIN
VDDIO
VDD
INT
AUX_SDA
AUX_SCL
CPOUT
REGOUT
2200pF
ATmega328
U1
AREF
ADC6
ADC7
VCC
AVCC
PB0
PB1
PB2
PB3
PB4
PB5
XTAL1/PB6
XTAL2/PB7
PC0
PC1
PC2
PC3
PC4
PC5
RESET/PC6
PD0
PD1
PD2
PD3
PD4
PD5
PD6
PD7
GPS_TX
ALERON
SS
MOSI
MISO
SCK
XTAL1
XTAL2
VOLTAGE_READ
RX
TX
GPS_RX
PPM
LED_MODE
THROTTLE
ELEVATOR
LED_GPS
VOLTAGE_READ
VCC
100K
10K
AMS1117-5.0
1uF
10uF
LED_GPS
LED_MODE
330
22pF
16Mhz
XTAL1
XTAL2
RESET
10K
1nF
DTR
FTDI
GPS
ALE
ELE
THR
VTX
CAM
75
47uF
100nF
MAX7456EUI+
U5
EP
AVDD
DVDD
PVDD
CS
RESET
CLKIN
SAG
SCLK
SDIN
VIN
HSYNC
VSYNC
CLKOUT
LOS
SDOUT
VOUT
XFB
AGND
DGND
PGND
XTAL1_OSD
XTAL2_OSD
27Mhz