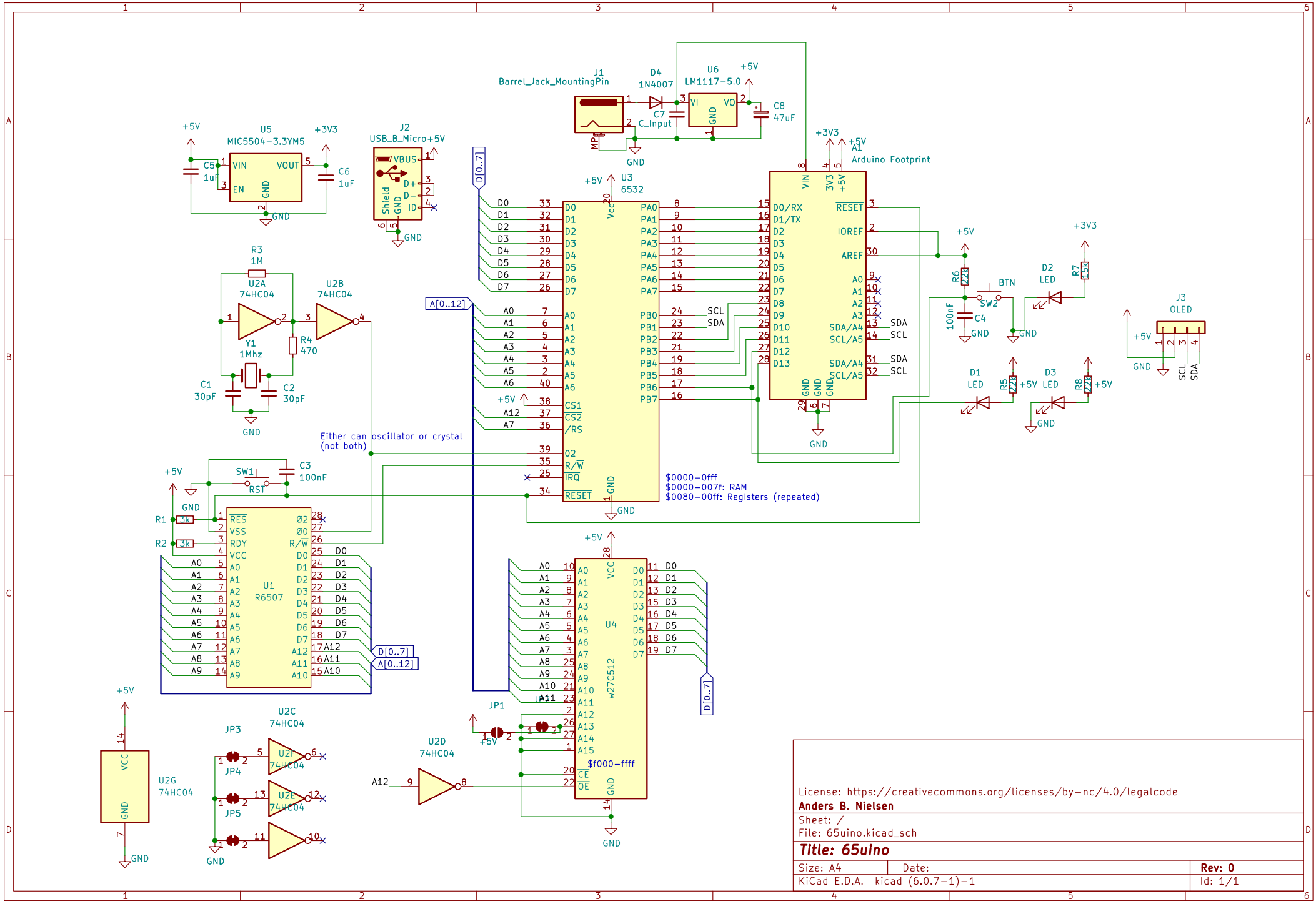

License: https://creativecommons.org/licenses/by-nc/4.0/legalcode

Anders B. Nielsen

Sheet: /
File: 65uino.kicad_sch

Title: 65uino

Size: A4	Date:	Rev: 0
KiCad E.D.A. kicad (6.0.7-1)-1		Id: 1/1