TENANT IMPROVEMENTS FOR:

BURGER LOUNGE

FOUNTAINS AT ROSEVILLE

1198 ROSEVILLE PARKWAY, SUITE #135 - ROSEVILLE, CA

ADDENDUM A

HEALTH DEPARTMENT NOTES

1. ALL FOOD RELATED & UTENSIL RELATED EQUIPMENT SHALL MEET OR BE EQUIVALENT TO SANITATION STANDARDS ESTABLISHED BY AN AMERICAN NATIONAL STANDARDS INSTITUTE (ANSI) ACCREDITED PROGRAM.
2. IF THE TRASH AREA FOR THE ESTABLISHMENT IS LOCATED OUTSIDE A CONCRETE SLAB WILL BE PROVIDED FOR TRASH, GARBAGE & GREASE BARREL STORAGE. THE INTERIOR SURFACE OF THE WALLS OF THE TRASH ENCLOSURE SHALL BE SMOOTH, SEALED AND WASHABLE)
3. THE WATER HEATER SHALL BE A COMMERCIAL TYPE & CAPABLE OF CONSTANT HOT WATER AT A TEMPERATURE OF AT LEAST 120 deg. TO ALL SINKS AND LAVATORIES. THE WATER HEATER IS SIZED FOR ALL SINKS AT THE PEAK HOURLY DEMAND.
4. ALL OPENABLE WINDOWS, VENT OPENINGS ETC. MUST BE PROVIDED W/TIGHT FITTING SCREENS OF MIN. 16 MESH TO THE INCH. WINDOWS TO BE FIXED AT FOOD PREP, UTENSIL WASHING OR UNPACKAGED FOOD SERVICE AREAS.
5. ALL PLUMBING, ELECTRICAL & GAS LINES SHALL BE CONCEALED WITHIN THE BLDG. STRUCTURE, ALL LINES NOT CONCEALED TO BE SECURED 6" OFF FLOOR & 3/4" FROM WALLS USING OFFSET BRACKETS.
6. CONDUITS, PLUMBING OR PIPING SHALL NOT BE INSTALLED ACROSS ANY AISLE WAY, TRAFFIC AREA OR DOOR OPENING. MULTIPLE RUNS OR CLUSTERS OF CONDUITS OR PIPING SHALL BE FURRED IN OR ENCASED IN AN APPROVED SEALED ENCLOSURE.
7. ALL SHELVING OVER WET AREAS (SINKS, MOP SINKS, ETC.) WILL BE GALV. METAL OR STAINLESS STEEL.
8. SHATTER SHIELDS FOR ALL LIGHTS ABOVE FOOD PREP, WORK & STORAGE AREAS WILL BE PROVIDED.
9. DELIVERY DOORS SHALL HAVE AN AIR CURTAIN FAN THAT SPANS THE WIDTH OF THE DOOR. THE FAN MUST ACTIVATE VIA A MICROSWITCH PROVIDING A MINIMUM VELOCITY OF 1600 FPM MEASURED 3 FEET ABOVE THE GROUND.
10. AN APPROVED BACKFLOW PREVENTER SHALL BE PROPERLY INSTALLED UPSTREAM OF ANY POTENTIAL HAZARD BETWEEN THE POTABLE WATER SUPPLY & A SOURCE OF CONTAMINATION. HOSES SHALL NOT BE ATTACHED TO A FAUCET OR HOSE BIBB UNLESS AN APPROVED BACKFLOW PREVENTER IS PROVIDED.
11. ALL LAVATORIES & HAND SINKS SHALL HAVE A COMBINATION FAUCET CAPABLE OF SUPPLYING WATER TEMPERED TO 100°F. SELF-CLOSING OR METERED FAUCETS SHALL PROVIDE AT LEAST 15 SECONDS OF WATER FLOW WITHOUT REACTIVATION.
12. EACH HANDWASHING SINK SHALL HAVE A PERMANENTLY WALL MOUNTED SINGLE SERVICE TOWEL AND SOAP DISPENSER.
13. IF A HANDSINK IS LOCATED ADJACENTLY TO A FOOD PREPARATION OR UTENSIL WASHING SINK, THEN A BARRIER IS REQUIRED TO PREVENT SPLASH-OVER FROM THE HANDSINK TO THE FOOD PREP/UTENSIL SINK. THE BARRIER IS TO BE THE LENGTH OF THE SINK, AT LEAST 12 INCHES IN HEIGHT AND HAVE A MINIMUM OF TWO INCHES CLEARANCE EACH SIDE OF THE BARRIER. THE BARRIER MUST BE CONSTRUCTED OF WATERPROOF MATERIAL, FIRMLY ATTACHED TO THE WALL OR OTHER APPROVED STRUCTURE.
14. SINKS MUST BE PROVIDED W/ A MIXING VALVE & SPOUT CAPABLE OF REACHING EACH COMPARTMENT
15. ALL WAREWASHING SINKS SHALL HAVE 3 COMPARTMENTS THAT ARE A MIN. OF 18" x 18" x 12" DEEP (OR 16" x 20" x 12" DEEP) WITH A MIN. 18" DRAINBOARD AT EACH END, HOWEVER, SINK MUST BE ABLE TO ACCOMMODATED THE LARGEST UTENSIL TO BE WASHED. IF AGAINST A WALL, IT MUST HAVE AN 8" INTEGRAL BACKSPLASH.
16. FOOD PREP SINK COMPARTMENTS TO BE AT LEAST 18" x 18" x 12" DEEP OR (16" x 20" x 12" DEEP) WITH A MINIMUM 18" DRAINBOARD. SEPARATE FOOD PREP SINKS SHALL BE PROVIDED FOR MEATS & PRODUCE.
17. BAR SINKS SHALL HAVE 3 OR 4 COMPARTMENTS THAT ARE A MIN. OF 12" x 12" x 10" DEEP WITH A MINIMUM 18" DRAINBOARD EACH END.
18. A SEPARATE WET WASTE DUMP FIXTURE SHALL BE PROVIDED FOR DISPOSAL OR WASTE ICE OR COFFEE WASTE.
19. WATER SUPPLY TO CARBONATORS SHALL BE PROTECTED BY AN APPROVED REDUCED PRESSURE PRINCIPLE BACKFLOW PROTECTOR. THE RELIEF VALVE SHALL DRAIN INDIRECTLY TO SEWER WITH A LEGAL AIR GAP.
20. SHELVES INSTALLED ON WALL ARE TO HAVE A MIN. 1" GAP OR OPEN SPACE BETWEEN THE BACK EDGE OF THE SHELF AND THE WALL SURFACE, OTHERWISE, THE BACK EDGE OF THE SHELF MUST BE SEALED TO THE WALL WITH AN APPROVED SEALANT.
21. ALL FLOOR MOUNTED EQUIPMENT WILL BE INSTALLED ON MINIMUM 6" HIGH SANITARY LEGS, CASTORS OR COMPLETELY SEALED IN POSITION ON A 4" HIGH CURB WITH A CONTINUOUSLY COVED BASE. COUNTERTOP EQUIPMENT WILL BE ON 4" HIGH SANITARY LEGS OR COMPLETELY SEALED TO THE COUNTERTOP UNLESS READILY REMOVEABLE.
22. IF SOFT DRINK, ICE OR OTHER DISPENSERS ARE SELF-SERVICE, OR IF REFILLS ARE PROVIDED THEY MUST BE PUSH BUTTON TYPES, OR LEVER TYPES WHERE THE LEVER CONTACTS THE CONTAINER AT LEAST ONE INCH BELOW THE RIM.
23. ALL EXTERIOR DOORS MUST OPEN OUTWARD AND BE SELF-CLOSING AND TIGHT FITTING.
24. BI-FOLD, FRENCH, ACCORDION STYLE & ROLL-UP DOORS CANNOT OPEN INTO THE FOOD PREP, UTENSIL WASHING OR UNPACKAGED FOOD SERVICE AREAS.
25. ALL RESTROOM & DRESSING ROOM DOORS MUST BE SELF-CLOSING AND TIGHT FITTING.
26. A MINIMUM OF 10 FOOT CANDLES OF LIGHT MEASURED 30" OFF FLOOR MUST BE PROVIDED IN WALK-IN REFRIGERATED STORAGE & DRY STORAGE ROOMS & AT LEAST 20 FOOT CANDLES OF LIGHT SHALL BE PROVIDED FOR CONSUMER SELF-SERVICE WHERE FRESH PRODUCE OR PREPACKAGED FOODS ARE SOLD OR OFFERED FOR CONSUMPTION. INSIDE EQUIPMENT SUCH AS REACH-IN & UNDER COUNTER REFRIGERATORS; IN AREAS USED FOR HANDWASHING, WAREWASHING, EQUIPMENT & UTENSIL STORAGE & TOILET ROOMS
27. A MINIMUM OF 50 FOOT CANDLES OF LIGHT MEASURED 30" OFF FLOOR MUST BE PROVIDED WHEN WORKING WITH UTENSILS OR EQUIPMENT SUCH AS KNIVES, SLICERS, GRINDERS OR SAWS WHERE EMPLOYEE SAFETY IS A FACTOR & IN ALL AREAS DURING PERIODS OF CLEANING.
28. ALL LIQUID WASTE SHALL BE DRAINED BY A MEANS OF INDIRECT WASTE PIPES INTO A FLOOR SINK. FLOOR SINKS ARE TO BE INSTALLED FLUSH WITH THE FINISHED FLOOR SURFACE & HAVE EASILY REMOVABLE SAFETY COVER GRATES.
29. FLOOR SINKS ARE TO BE 50% EXPOSED WHEN NO ACCESS IS PROVIDED FOR CLEANING OR BE IN LINE WITH THE FRONT FACE OF ELEVATED FREE STANDING EQUIPMENT.
30. FOR CLEANING FLOOR MATS, THE MOP SINK SHALL BE A MINIMUM OF 24" x 36" FLOOR MOUNTED TYPE. MOPS SHALL BE PLACED IN A POSITION THAT ALLOWS THEM TO AIR DRY WITHOUT SOILING WALLS, EQUIPMENT OR SUPPLIES.
31. THE MOP SINK FAUCET SHALL HAVE A THREADED OUTER LIP FOR HOSE ATTACHMENT WITH AN APPROVED BACKFLOW PREVENTION DEVICE. NO CHEMICAL DIPSENSING SYSTEMS OR SHUT-OFF VALVES TO BE ATTACHED TO THE MOP SINK FAUCET UNLESS A "SIDEKICK" PLUMBING DEVICE IS INSTALLED.
32. NO CONDENSATE OR WASTEWATER INCLUDING HVAC WILL DRAIN INTO THE JANITORIAL SINK
33. GREASE TRAPS SHALL BE LOCATED OUTSIDE OF THE FOOD SERVICE ACTIVITY AREA, FLUSH WITH THE FINISHED FLOOR WHEN INDOORS. LOCAL WASTEWATER DISTRICT OR BUILDING DEPARTMENT SHALL BE CONTACTED FOR GREASE REMOVAL REQUIREMENTS.
34. FLOOR DRAINS SHALL BE INSTALLED IN FLOORS THAT ARE WATER FLUSHED FOR CLEANING & IN AREAS WHERE PRESSURE SPRAY METHODS FOR CLEANING EQUIPMENT ARE USED, IN RESTROOMS, JANITORIAL ROOMS, SCULLERIES & AT BARS WITH WAREWASHING. FLOOR SURFACES IN AREAS PURSUANT TO THIS SHALL BE SLOPED 1:50 TO THE FLOOR DRAINS.
35. THE FLOOR FINISH WILL HAVE A SMOOTH SURFACE UNDER ALL EQUIPMENT, AND THE WALKWAYS WILL HAVE A LIGHT TEXTURE ONLY.
36. ADEQUATE VENTILATION IS TO BE PROVIDED TO ALL TOILET ROOMS, JANITOR CLOSETS WITH MOP SINKS, INDOOR TRASH ROOMS & DRESSING/CHANGE ROOMS.
37. ALL SEAMS, GAPS, OPENINGS TO BE PROPERLY SEALED.
38. PAINT USED ON WALLS & CEILINGS OF ALL KITCHEN, FOOD PREP, WORK & STORAGE AREAS SHALL BE GLOSS OR SEMI-GLOSS ENAMEL. FINISH MATERIAL SHALL BE LIGHT IN COLOR IN FOOD PREP AREAS FOR EASY CLEANING.
39. PRIOR TO INSTALLATION, SAMPLES OF FINISHES TO BE SUBMITTED TO ENVIRONMENTAL HEALTH FOR APPROVAL AS NEEDED.
40. COLD STORAGE ROOMS SHALL BE PROVIDED WITH A SECTION OF SHELVING INSTALLED TO HOLD SHALLOW COOL DOWN PANS - NOT TO EXCEED 4" IN HEIGHT. SPACE BETWEEN SHELVES SHALL BE AT LEAST 8" HIGH.
41. BACKUP DRY STORAGE SHELVING SHALL BE A MINIMUM OF 96 LINEAL FEET (MEASURED WITH TIERS) OR 25% OF KITCHEN, FOOD PREP & WORK AREAS WHICHEVER IS GREATER. SHELVING SHALL BE AT LEAST 18" DEEP & START AT A MINIMUM OF 6" ABOVE THE FLOOR SURFACE.
42. OPENABLE WINDOWS, VENT OPENINGS OR OTHER SIMILAR OPENINGS MUST BE PROVIDED WITH TIGHT FITTING SCREENS OF MINIMUM 16 MESH. WINDOWS TO BE FIXED AT FOOD PREP, UTENSIL WASHING, OPEN FOOD & STORAGE AREAS.

PROJECT DATA

EXISTING SHELL BUILDING DATA:

CONSTRUCTION TYPE: TYPE II-A, FULLY-SPRINKLERED BUILDING
NUMBER OF STORIES: ONE
FLOOR AREA:
OCCUPANCY GROUPS: MIXED - A2, M, B (SEPARATED OCCUPANCIES)

PROJECT ADDRESS:

FOUNTAINS AT ROSEVILLE
1198 ROSEVILLE PKWY., #135
ROSEVILLE, CA 95678

PROJECT DATA:

EXISTING VACANT SHELL LEASE SPACE
PERMITTED OCCUPANCY GROUP: B, CANDY SHOP
PROPOSED OCCUPANCY GROUP: A-2, RESTAURANT
LEASE SPACE FLOOR AREA: 1,474 S.F.
EXTERIOR PATIO AREA: 347 S.F.

PROJECT DESCRIPTION:

TENANT IMPROVEMENTS FOR A BURGER RESTAURANT WITHIN AN EXISTING SHELL TENANT LEASE SPACE. WORK TO INCLUDE: NEW INTERIOR PARTITIONS, CEILINGS, LIGHTING, FINISHES, PLUMBING & ELECTRICAL WORK, TYPE I EXHAUST HOOD, HVAC SYSTEM - NO STRUCTURAL MODIFICATIONS TO THE EXISTING BUILDING STRUCTURE PROPOSED

OCCUPANT LOAD: 69 OCC. INTERIOR
23 OCC. EXTERIOR PATIO
(SEE SHEET 'A3' FOR CALCULATION)

APPLICABLE CODES:

2016 CALIFORNIA BUILDING CODE
2016 CALIFORNIA MECHANICAL CODE
2016 CALIFORNIA PLUMBING CODE
2016 CALIFORNIA ELECTRICAL CODE
2016 CALIFORNIA ENERGY CODE
2016 CALIFORNIA FIRE CODE
2016 CALIFORNIA GREEN CODE

FIRE DEPARTMENT NOTES

1. EXIT SIGNS MUST BE INTERNALLY ILLUMINATED. (2016 CFC & CBC SEC. 1013.3)
2. PROVIDE TWO SEPARATE SOURCES OF POWER FOR EXIT SIGNS CONFORMING TO 2016 CFC & CBC 1013.6.3
3. THE MEANS OF EGRESS INCLUDING THE EXIT DISCHARGE SHALL BE ILLUMINATED AT ALL TIMES. THE EGRESS ILLUMINATION LEVEL SHALL BE 1 FOOTCANDLE (MIN.) & THE MEANS OF ILLUMINATION SHALL BE PROVIDED WITH A 90 MINUTE EMERGENCY BACK-UP POWER SUPPLY SOURCE. (CBC 1006)
4. PROVIDE A MINIMUM OF ONE 2:A10:B-C CLASSIFICATION FIRE EXTINGUISHER WITHIN 75 FEET TRAVEL DISTANCE FOR EACH 3,000 SQUARE FEET, OR PORTION THEREOF, ON EACH FLOOR. (CFC 906)
5. LOCATIONS & CLASSIFICATIONS OF FIRE EXTINGUISHERS SHALL BE IN ACCORDANCE WITH CFC 906 AND CALIFORNIA CODE OF REGULATIONS (CCR) TITLE 19
6. DURING CONSTRUCTION, AT LEAST ONE FIRE EXTINGUISHER SHALL BE PROVIDED ON EACH FLOOR LEVEL AT EACH STAIRWAY, IN ALL STORAGE & CONSTRUCTION SHEDS, IN LOCATIONS WHERE FLAMMABLE OR COMBUSTIBLE LIQUIDS ARE STORED OR USED, AND WHERE OTHER SPECIAL HAZARDS ARE PRESENT PER CFC SECTION 3315.1
7. BUILDINGS UNDERGOING CONSTRUCTION, ALTERATION OR DEMOLITION SHALL CONFORM TO CFC CHAPTER 33. WELDING, CUTTING AND OTHER "HOT WORK" SHALL BE IN CONFORMANCE WITH CFC CHAPTER 35.
8. ADDRESS IDENTIFICATION SHALL BE PROVIDED FOR ALL NEW & EXISTING BUILDINGS IN A LOCATION THAT IS PLAINLY VISIBLE & LEGIBLE FROM THE STREET OR ROAD FRONTING THE PROPERTY. WHERE ACCESS IS BY WAY OF A PRIVATE ROAD AND THE BUILDING ADDRESS CANNOT BE VIEWED FROM THE PUBLIC WAY, AN APPROVED SIGN OR MEANS SHALL BE USED TO IDENTIFY THE STRUCTURE. PREMISES IDENTIFICATION SHALL CONFORM TO CBC SECTION 501.2
9. DUMPSTERS & TRASH CONTAINERS EXCEEDING 1.5 CUBIC YARDS SHALL NOT BE STORED IN BUILDINGS OR PLACED WITHIN 5 FEET OF COMBUSTIBLE WALLS, OPENINGS OR COMBUSTIBLE ROOF EAVE LINES UNLESS PROTECTED BY AN APPROVED FIRE SPRINKLER SYSTEM OR LOCATED IN A TYPE I OR IIA STRUCTURE SEPARATED BY 10 FEET FROM OTHER STRUCTURES. CONTAINERS LARGER THAN 1 CUBIC YARD SHALL BE OF NON OR LIMITED-COMBUSTIBLE MATERIALS OR SIMILARLY PROTECTED OR SEPARATED. CFC 304.3
10. EXITS, EXIT SIGNS, FIRE ALARM PANELS, HOSE CABINETS, FIRE EXTINGUISHER LOCATIONS & STANDPIPE CONNECTIONS SHALL NOT BE CONCEALED BY CURTAINS, MIRRORS OR OTHER DECORATIVE MATERIALS.
11. THE EGRESS PATH SHALL REMAIN FREE & CLEAR OF ALL OBSTRUCTIONS AT ALL TIMES. NO STORAGE IS PERMITTED IN ANY EGRESS PATHS
12. ALL CONSTRUCTION SITES MUST COMPLY WITH APPLICABLE PROVISIONS OF THE CFC CHAPTER 33 & SCCFD'S SPECIFICATION S1-7 - CONSTRUCTION SITE FIRE SAFETY.
13. FIRE DEPT. ACCESS TO THE SITE, THE BUILDING & TO ALL FIRE PROTECTION SYSTEMS SHALL BE MAINTAINED AT ALL TIMES, IN ACCORDANCE WITH CFC CHAPTER 5. NO OBSTRUCTION SUCH AS VEHICLES, STORAGE & OTHER MATERIALS OR OBJECTS SHALL NOT BE PLACED OR KEPT NEAR FIRE HYDRANTS, FIRE DEPT. INLET CONNECTIONS OR FIRE PROTECTION SYSTEM CONTROL VALVES IN A MANNER THAT WOULD PREVENT SUCH EQUIPMENT OR FIRE HYDRANTS FROM BEING IMMEDIATELY DISCERNIBLE IN ACCORDANCE WITH CFC 508.5.4
14. ANYTIME THE SPRINKLER SYSTEM IS IMPAIRED, A FIRE WATCH IS TO BE PROVIDED, THE SYSTEM IS TO BE TAGGED & A CORRESPONDING IMPAIRMENT PROGRAM IS TO BE PROVIDED FOR THE FIRE PROTECTION SYSTEM IN ACCORDANCE WITH CFC CHAPTER 9.
15. ANY AWNING FABRIC TO BE INSTALLED SHALL BE PROVIDED WITH AN APPROVED COVERING THAT MEETS THE FIRE PROPAGATION PERFORMANCE CRITERIA OF TEST METHOD 1 OR 2 OF NFPA 701 OR HAS A FLAME SPREAD INDEX NOT GREATER THAN 25 WHEN TESTED IN ACCORDANCE WITH ASTM E84 OR UL 723 & FLAME RESISTANT AS SET FORTH IN CCR, TITLE 19, DIVISION 1, CHAPTER 8 & APPROVED & LISTED BY THE CALIFORNIA STATE FIRE MARSHALL IN ACCORDANCE WITH CBC 3105

CONTACTS

ARCHITECT:
BAKER ARCHITECTURE
4080 CENTRE ST, STE #203
SAN DIEGO, CA 92103
CONTACT: RONNIE ROLLMAN
PHONE: (619) 358-9225
EMAIL: ronnie@bakerarchitecture.com

INTERIOR DESIGN:
STUDIO MYID
2926 UPAS ST.
SAN DIEGO, CA 92104
CONTACT: MELISSA YOUNG
PHONE: (760) 519-4446
EMAIL: melissa@studioMYID.com

FOOD SERVICE:
FOOD SERVICE DESIGN GROUP
1202 MARKET STREET
SAN DIEGO, CA 92101
CONTACT: WEN KO
PHONE: (619) 239-8156
EMAIL: Wko@fsdesigngroup.com

LANDLORD:
INTER-CAL REAL ESTATE CORP.
540 FULTON AVE.
SACRAMENTO, CA 95825
CONTACT: YONCIE GRISWOLD
PHONE: (916) 489-4600

TENANT:
BURGER LOUNGE III, LLC
1917 INDIA ST. RC
SAN DIEGO, CA 92101
CONTACT: ADAM RINELLA
PHONE: (760) 809-0485
EMAIL: adam@burgerlounge.com

DEFERRED SUBMITTALS

AUTOMATIC FIRE EXTINGUISHING SYSTEM FOR THE COMMERCIAL FOOD HEAT PROCESSING EQUIPMENT (TYPE I HOOD) WILL REQUIRE A SEPARATE, CITY OF ROSEVILLE FIRE DEPARTMENT PERMIT. RFC sec 901.3

MODIFICATIONS AND / OR ADDITIONS TO THE AUTOMATIC FIRE SPRINKLERS AND / OR FIRE ALARM SYSTEMS WILL REQUIRE A SEPARATE, CITY OF ROSEVILLE FIRE DEPARTMENT PERMIT. RFC sec. 901.3

THE FOLLOWING ITEMS SHALL BE A DEFERRED SUBMITTAL:

a) FIRE DETECTION SYSTEM (FOR MONITORING OF THE SMOKE DETECTION OF EACH AIR HANDLER AS NOTED ON M & E SHEETS & IN ACCORDANCE WITH CMC 608.1 & THE KITCHEN HOOD SUPPRESSION SYSTEM

b) KITCHEN HOOD SUPPRESSION SYSTEM IN ACCORDANCE WITH CFC 904.11

c) FIRE SPRINKLER SYSTEM
i) FIRE SPRINKLERS ARE TO BE PROVIDED IN ALL COMBUSTIBLE CONCEALED SPACES IN ACCORDANCE WITH NFPA 13, 8.15.1
ii) FIRE SPRINKLERS FOR FREEZER/COOLER SHALL BE INTERMEDIATE TEMPERATURE OR HIGHER IN ACCORDANCE WITH NFPA 13, 8.3.2.5 (10)

DISABLED ACCESS NOTE COMPLIANCE

1. I AM THE DESIGNER/OWNER IN RESPONSIBLE CHARGE OF THIS ADDITION/ALTERATION PROJECT; I HAVE INSPECTED THE SITE/PREMISES AND DETERMINED THAT EXISTING CONDITIONS,
   ☒ ARE
   ☐ AS IMPROVED PER THESE PLANS, WILL BE
   IN FULL COMPLIANCE WITH CURRENT SITE ACCESSIBILITY REQUIREMENTS TO THE EXTENT REQUIRED BY LAW.

   KATHERINE BAKER — SIGNATURE — 4/6/18 — ☒ DESIGNER ☐ OWNER
   NAME (PRINT) — DATE

2. I AM THE DESIGNER/OWNER IN RESPONSIBLE CHARGE OF THIS ADDITION / ALTERATION PROJECT; I HAVE INSPECTED THE SITE/PREMISES AND DETERMINED THAT EXISTING RESTROOM(S) SERVING AREA(S) OF ALTERATION,
   ☐ ARE
   ☒ AS IMPROVED PER THESE PLANS, WILL BE
   FULLY ACCESSIBLE ACCORDING TO CURRENT REQUIREMENTS.

   KATHERINE BAKER — SIGNATURE — 4/6/18 — ☒ DESIGNER ☐ OWNER
   NAME (PRINT) — DATE

3. IF THE BUILDING INSPECTOR DETERMINES NONCOMPLIANCE WITH ANY CURRENT ACCESSIBILITY PROVISIONS OF THE LAW, HE/SHE SHALL REQUIRE SUBMITTAL OF COMPLETE AND DETAILED PLANS TO THE BUILDING DEVELOPMENT REVIEW DIVISION OF THE DEVELOPMENT SERVICES DEPARTMENT FOR FURTHER REVIEW. PLANS MUST CLEARLY SHOW ALL EXISTING NON-COMPLYING CONDITIONS AFFECTED BY THE REMODEL (INCLUDING SITE PLAN, FLOOR PLAN, DETAILS, ETC.) AND PROPOSED MODIFICATIONS OF DEFICIENCIES TO MEET CURRENT ACCESSIBILITY PROVISIONS. THE PLANS MUST BE STAMPED BY THE FIELD INSPECTOR PRIOR TO SUBMITTAL FOR PLAN REVIEW.

DRAWING INDEX

ARCHITECTURAL

TI	COVER SHEET
A0	REFERENCE SITE PLAN
A0.1	PARTIAL SITE PLAN, ACCESSIBLE PARKING DETAILS
A0.2	EXISTING COMMON RESTROOMS PLAN
A1	EXISTING FLOOR PLAN
A2	CONSTRUCTION FLOOR PLAN
A3	ARCHITECTURAL FLOOR PLAN
A4	REFLECTED CEILING PLAN
A5	ENLARGED RESTROOM PLAN, ELEVATIONS & DETAILS
A6	WALL SECTIONS & DETAILS
A7	DOOR SCHEDULE & TYPICAL DETAILS

INTERIOR DESIGN

I-6.0	FURNITURE & EQUIPMENT PLAN
I-7.0	REFLECTED CEILING PLAN
I-7.1	LIGHT FIXTURE SCHEDULE
I-9.0	FINISH PLAN
I-9.1	FINISH SCHEDULE & NOTES
I-11.0	MILLWORK DETAILS
I-11.1	MILLWORK DETAILS
I-12.0	ELEVATIONS
I-12.1	ELEVATIONS
I-12.2	ELEVATIONS
I-12.3	ENLARGED RESTROOM PLAN & ELEVATIONS

MECHANICAL

M1.0	MECHANICAL ROOF PLAN, SCHEDULES & SECTION DETAILS
M2.0	DUCTWORK PLAN, SCHEDULES, TYP. DETAILS & NOTES
M3.0	TYPE I EXHAUST HOOD PLAN, SECTION & ELEVATION
M4.0	CAPTIVE AIRE HOOD DRAWINGS
M4.1	CAPTIVE AIRE HOOD DRAWINGS
M4.2	CAPTIVE AIRE HOOD DRAWINGS
M4.3	CAPTIVE AIRE HOOD DRAWINGS
M4.4	CAPTIVE AIRE HOOD DRAWINGS
M4.5	CAPTIVE AIRE HOOD DRAWINGS
M5.0	TITLE 24 FORMS

PLUMBING

P1.0	WASTE/VENT PIPING PLAN
P2.0	WATER PIPING PLAN
P3.0	GAS PIPING PLAN
P4.0	PLUMBING SCHEDULES, NOTES & TYP. DETAILS

ELECTRICAL

E1.0	ROOF POWER PLAN & SINGLE LINE DIAGRAM
E2.0	POWER PLAN & PANEL SCHEDULE
E3.0	LIGHTING PLAN & SCHEDULE
E3.1	LIGHTING CONTROLS & EMERGENCY INVERTER CUT SHEETS
E4.0	INDOOR LIGHTING TITLE 24
E4.1	OUTDOOR LIGHTING TITLE 24

FOOD SERVICE

FS-N	COVER SHEET
FS-1.0	FOOD SERVICE EQUIPMENT PLAN
FS-2.0	FOOD SERVICE EQUIPMENT SCHEDULE
FS-3.0	FOOD SERVICE ELECTRICAL ROUGH-IN PLAN
FS-4.0	FOOD SERVICE UNDER SLAB PLUMBING ROUGH-IN PLAN
FS-4.1	FOOD SERVICE ABOVE SLAB PLUMBING ROUGH-IN PLAN
FS-5.0	FOOD SERVICE EQUIPMENT ELEVATIONS
FS-6.0	FOOD SERVICE EQUIPMENT SECTIONS
FS-B	WALL BACKING PLAN
FS-H1	HOOD DRAWINGS & SPECIFICATIONS
FS-H2	HOOD DRAWINGS & SPECIFICATIONS
FS-H3	HOOD DRAWINGS & SPECIFICATIONS
FS-H4	HOOD DRAWINGS & SPECIFICATIONS
FS-H5	HOOD DRAWINGS & SPECIFICATIONS
FS-W1	WALK-IN DRAWINGS & SPECIFICATIONS

VICINITY MAP

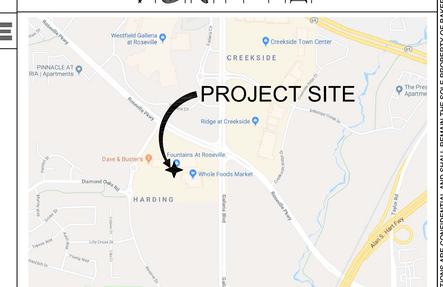
PROJECT SITE
Westfield Galleria at Roseville
Creekside Town Center
CREEKSIDE
PINNACLE AT RIA | Apartments
The Preserve Apartments
Ridge at Creekside
Dave & Buster's
Fountains At Roseville
Whole Foods Market
Diamond Oaks
HARDING
Roseville Pkwy
Foothill Blvd
Junction Blvd
Sunrise Blvd
Douglas Blvd
Eureka Rd
Taylor St
Lily Grove Dr
Harding Blvd
Pleasant Grove Blvd
Fiddyment Rd
Fairchild Rd
Cirby Way
Roseville Rd
Sac St
Atlantic St
Foothill Blvd
Junction Blvd
Sunrise Blvd
Douglas Blvd
Eureka Rd
Taylor St
Pleasant Grove Blvd
Roseville Pkwy
Sac St
Atlantic St
Fiddyment Rd
Fairchild Rd
Cirby Way
Roseville Rd
Harding Blvd
Lily Grove Dr
Diamond Oaks
Douglas Blvd

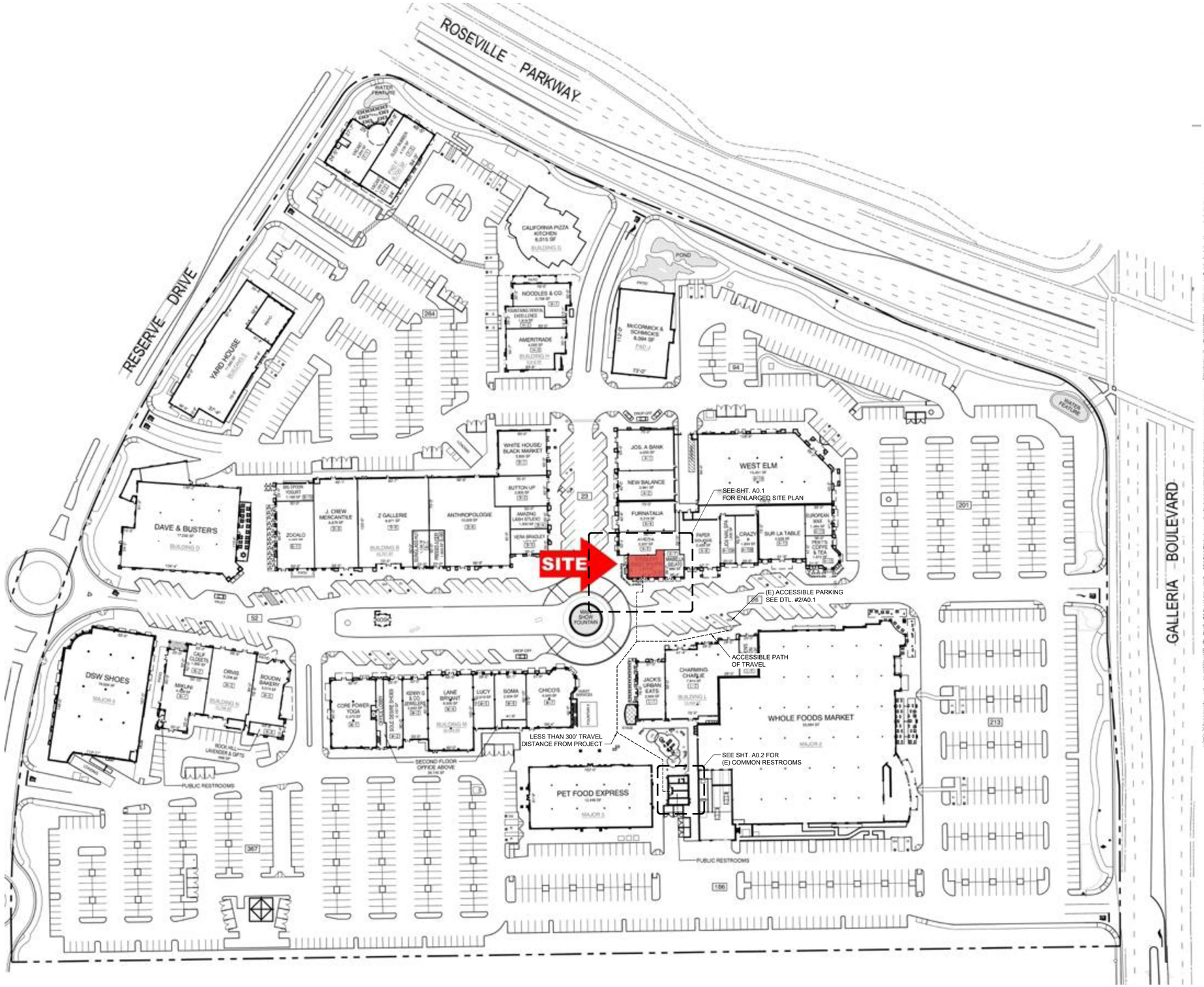

FOUNTAINS - PHASE I ONLY					
Tenant	Suite	Sq. Ft	USE	Prkg. Ratio	Req'd
Building 'A' 1198 Roseville Pkwy					
JOS A BANK	100	4,050	Retail	1:300	14
NEW BALANCE	105/110	2,981	Vacant ~~Retail~~	~~1:300~~	~~10~~
FURNATALIA	120	3,018	Retail	1:300	10
AVEDA	130	2,507	~~Salon~~	1:300	8
~~STEIBLER'S SWEET~~ Buegel Lounge	135	1,474	Restaurant	1:100	15
MIABELLA GELATO	140	880	Restaurant	1:100	9
PAPER SOURCE	145	3,428	Retail	1:300	11
- NOT USED COMBINED PAPER SOURCE					
JOLIE NAIL SALON	150	1,300	Salon	1:300	4
CRAZY 8	160	1,934	Retail	1:300	6
SUR LA TABLE	170	4,528	Retail	1:300	15
PEET'S COFFEE	175	1,672	Restaurant	1:100	17
EUROPEAN WAX	180	1,484	Salon	1:300	5
WEST ELM	190	15,451	Furniture	1:400	39
Building 'B' 1192 Roseville Pkwy					
BIG SPOON	100	1,188	Restaurant	1:100	12
ZOCALO	105	4,562	Restaurant	1:100	46
- NOT USED	110				
J. CREW FACTORY	120	6,876	Retail	1:300	23
Z GALLERIE	130	9,971	Furniture	1:400	25
SUNGLASS HUT	140	1,100	Retail	1:300	4
PRESSED JUICERY	145	1,000	Restaurant	1:100	10
ANTHROPOLGIE	150	10,000	Retail	1:300	33
VERA BRADLEY	160	1,874	Retail	1:300	6
~~BOULEVARD DE AMELIE~~ Amazing Lash	165	1,500	~~Retail~~ Salon	1:300	5
BUTTON UP	170	2,800	Retail	1:300	9
- NOT USED	175				
WHITE HSE BLK MK	180	3,900	Retail	1:300	13
Building 'C'					
Tenant	Suite	Square Feet	USE	Parking Ratio	Req'd
Building 'D'- D & B		17,232	Retail/Restaurant/ Gaming	1:147	117
Building 'L' 1006 Galleria Blvd					
18/8 MEN'S SALON	100	1,363	Salon	1:300	5
- COMBINED CHARM. CHAR.	110				
CHARMING CHARLIE	120	7,915	Retail	1:300	26
- COMBINED CHARM. CHAR.	130				
JACK'S URBAN EATS	150	2,830	Restaurant	1:100	28
Building 'M' 1013 Galleria Blvd					
OFFICE (90% net of 26,745 sf gross)		24,071	Office	1:250	96
CHICOS	100	4,540	Retail	1:300	15
SOMA	120	2,634	Retail	1:300	9
~~LUCY~~ Vacant	130	2,019	~~Retail~~	~~1:300~~	~~7~~
LANE BRYANT	140	6,000	Retail	1:300	20
KENNY G & CO.	160	2,840	Retail	1:300	9
SOLE DESIRE SHOES	170	2,157	Retail	1:300	7
CORE POWER YOGA	190	5,273			
* STUDIO AREA		1,842	Health	1:50	37
Building 'N' (also MAJOR 4)					
MIKUNI	160	4,408	Restaurant	1:100	44
CALIFORNIA CLOSETS	140	1,392	Retail	1:300	5
ORVIS	130	5,228	Retail	1:300	17
- COMBINED ORVIS	120				
BOUDIN BAKERY	100	3,574	Restaurant	1:100	36
ROCK HILL LAVENDER	170	688	Retail	1:300	2
MAJOR 2:WHOLE FOODS 1001 Galleria Blvd		55,884	Market	1:300	186
MAJOR 3:PET FOOD EXPRESS 1009 Galleria Blvd		13,446	Retail	1:300	45
MAJOR 5:DSW SHOES 1021 Galleria Blvd		19,026	Retail	1:300	63
Building 'E': YARD HOUSE		11,690	Restaurant	1:100	117
Building 'F'					
~~PROPOSED RETAIL~~ Compose Extinity		~~5,075~~ 4454	Retail	1:300	~~17~~
~~PROPOSED RETAIL~~ Sleep Number		~~4,600~~ 4100	Retail	1:300	~~15~~
Building 'G': CALIF PIZZA KITCHEN		6,015	Restaurant	1:100	60
Building 'H'					
AMERITRADE	180	4,000	Financial	1:250	16
FOUNTAINS DENTAL	190	1,919	Office	1:150	8
NOODLES & CO.	200	2,708	Restaurant	1:100	27
280					
Building 'J' - McCORMICK & SCHMICK		8,064	Restaurant	1:100	81
TOTAL REQUIRED:				S	**1464**
TOTAL PROVIDED:					1728
PHASE 1 SITE					1426
PHASE 2 TEMPORARY					302

1 REFERENCE SITE PLAN - FOUNTAINS AT ROSEVILLE

SCALE: N.T.S.

CITY STAMP

LICENSED ARCHITECT
RAYMOND BAKER
No. C28547
REN. 6-19
STATE OF CALIFORNIA

BAKER [b a] architecture
4080 CENTRE ST, STE #203
SAN DIEGO, CA 92103 TEL
(619) 281-5937
www.bakerarchitecture.com

REVISION SCHEDULE			
REV	DATE	BY	DESCRIPTION
1	05.29.18	-	BLDG. DEPT. PLAN CHECK
2			
3			
4			
5			

PROJECT # 17XXX

BURGER LOUNGE III LLC
FOUNTAINS AT ROSEVILLE
1198 ROSEVILLE PKWY. #135 - ROSEVILLE, CA 95678

DATE: 04/06/18

A0

THESE DRAWINGS AND SPECIFICATIONS ARE CONFIDENTIAL AND SHALL REMAIN THE SOLE PROPERTY OF BAKER ARCHITECTURE, WHICH IS THE OWNER OF COPYRIGHT IN THIS WORK. THEY SHALL NOT BE REPRODUCED IN WHOLE OR IN PART, SHARED WITH THIRD PARTIES OR USED IN ANY MANNER ON OTHER PROJECTS OR EXTENSIONS TO THIS PROJECT WITHOUT THE PRIOR WRITTEN CONSENT OF BAKER ARCHITECTURE.

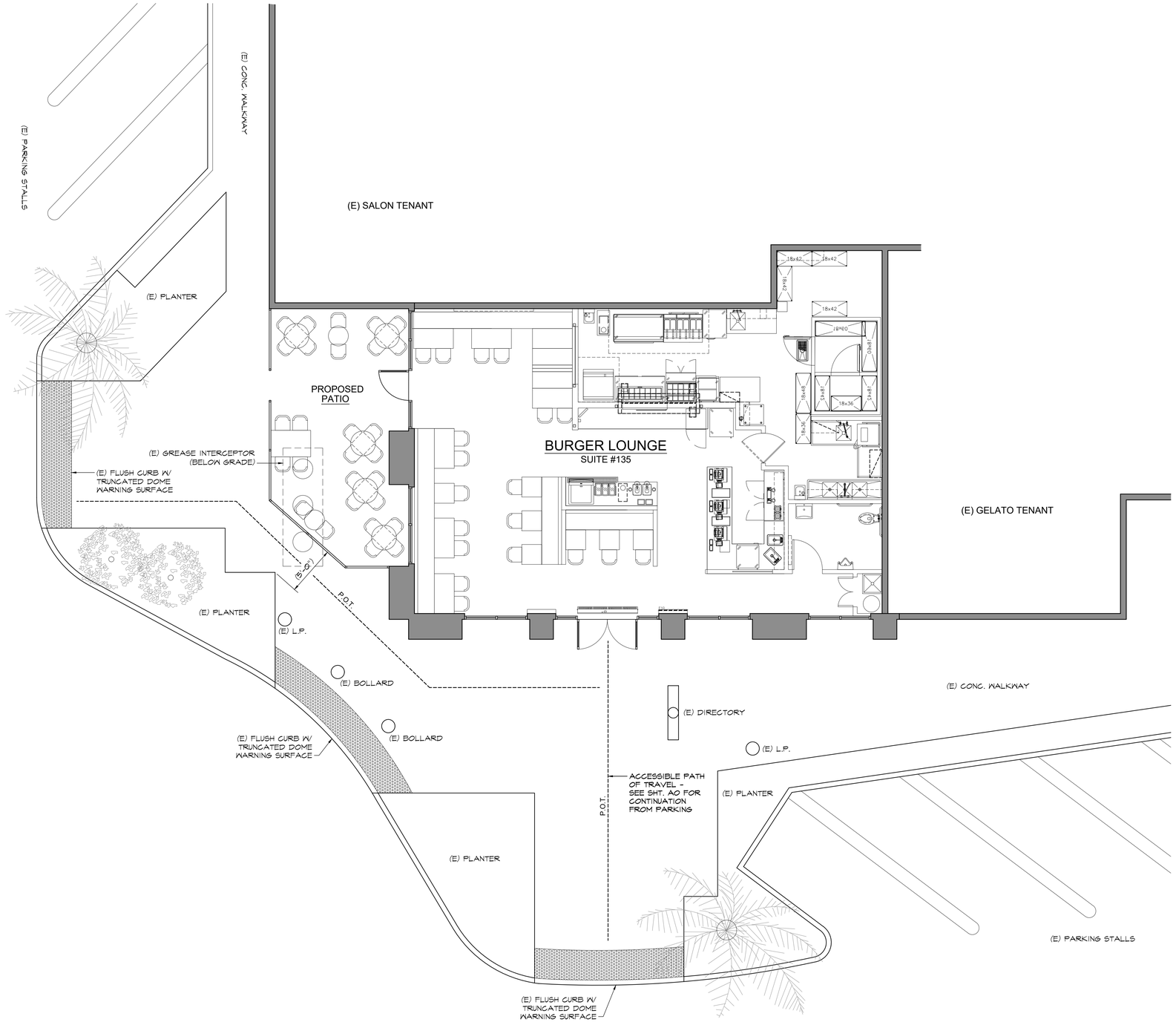

1 PARTIAL SITE PLAN - FOUNTAINS AT ROSEVILLE — SCALE: 3/16"=1'-0"

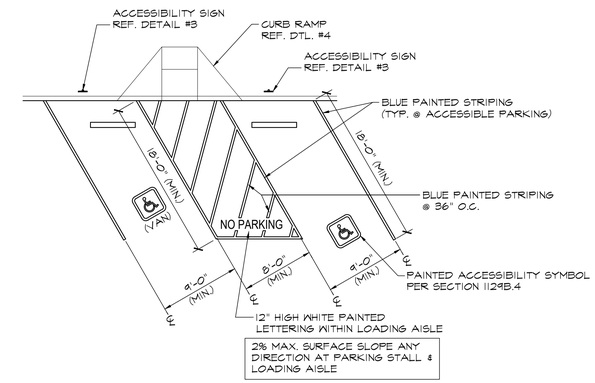

(FOR REFERENCE - EXISTING PARKING PROVIDED)

2 ACCESSIBLE PARKING STALLS — SCALE: 1/8"=1'-0"

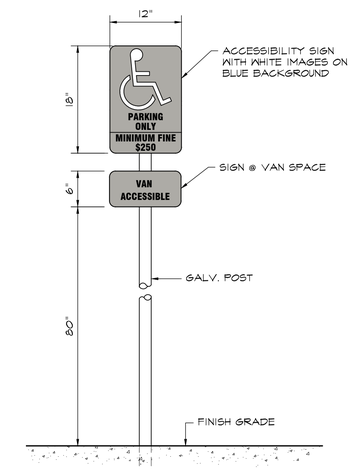

(FOR REFERENCE - EXISTING SIGN PROVIDED)

3 ACCESSIBLE PARKING SIGNAGE — SCALE: N.T.S.

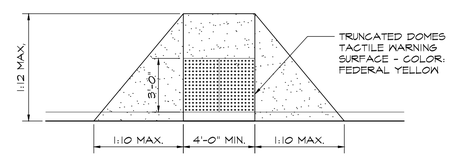

PLAN VIEW
(RAMP WITH FLARED SIDES)

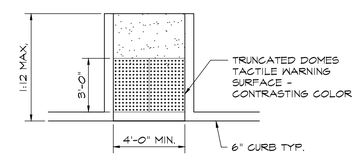

PLAN VIEW
(RAMP WITHOUT FLARED SIDES)

4 CURB RAMP TYP. — SCALE: N.T.S.

CITY STAMP

THESE DRAWINGS AND SPECIFICATIONS ARE CONFIDENTIAL AND SHALL REMAIN THE SOLE PROPERTY OF BAKER ARCHITECTURE, WHICH IS THE OWNER OF COPYRIGHT IN THIS WORK. THEY SHALL NOT BE REPRODUCED IN WHOLE OR IN PART, SHARED WITH THIRD PARTIES OR USED IN ANY MANNER ON OTHER PROJECTS OR EXTENSIONS TO THIS PROJECT WITHOUT THE PRIOR WRITTEN CONSENT OF BAKER ARCHITECTURE.

LICENSED ARCHITECT — RAYMONDE BAKER — No. C28547 — REN. 6-19 — STATE OF CALIFORNIA

BAKER [b a] architecture
4080 CENTRE ST, STE #203
SAN DIEGO, CA 92103 TEL.
(619) 281-5937
www.bakerarchitecture.com

REVISION SCHEDULE

REV	DATE	BY	DESCRIPTION
1	05.29.18	--	BLDG. DEPT. PLAN CHECK
2			
3			
4			
5			

PROJECT # 17XXX

BURGER LOUNGE III LLC
FOUNTAINS AT ROSEVILLE
1198 ROSEVILLE PKWY. #135 - ROSEVILLE, CA 95678

DATE: 04/06/18

A0.1

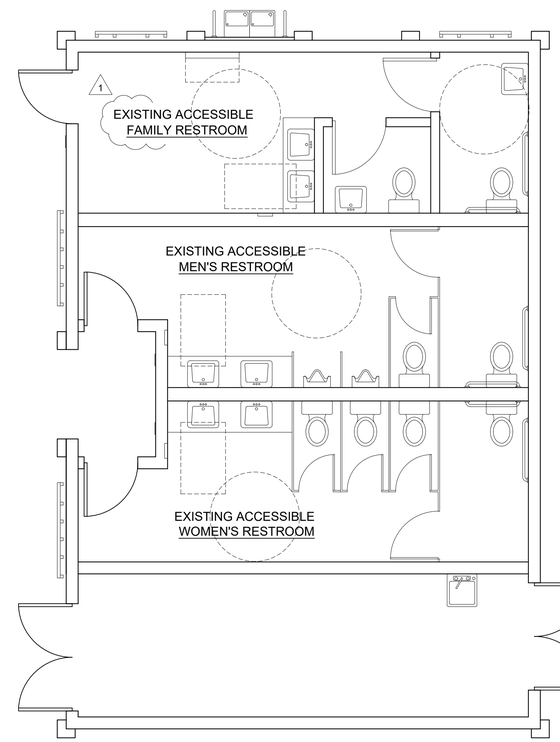

EXISTING RESTROOM PLAN FOR REFERENCE ONLY - NO PROPOSED WORK
REF. SHT. A5 FOR TYP. ACCESSIBLE RESTROOM DETAILS & REQ'MNTS.

0' 2' 4'
SCALE: 1/4" = 1'-0"

NORTH

CITY STAMP

1 EXISTING COMMON RESTROOMS PLAN - FOUNTAINS AT ROSEVILLE SCALE: 1/4"=1'-0"

THESE DRAWINGS AND SPECIFICATIONS ARE CONFIDENTIAL AND SHALL REMAIN THE SOLE PROPERTY OF BAKER ARCHITECTURE, WHICH IS THE OWNER OF COPYRIGHT IN THIS WORK. THEY SHALL NOT BE REPRODUCED IN WHOLE OR IN PART, SHARED WITH THIRD PARTIES OR USED IN ANY MANNER ON OTHER PROJECTS OR EXTENSIONS TO THIS PROJECT WITHOUT THE PRIOR WRITTEN CONSENT OF BAKER ARCHITECTURE.

LICENSED ARCHITECT
KAREEM BAKER
No. C28547
REN. 6-19
STATE OF CALIFORNIA

BAKER [b a] architecture
4080 CENTRE ST, STE #203
SAN DIEGO, CA 92103 TEL.
(619) 281-5937
www.bakerarchitecture.com

REVISION SCHEDULE

REV	DATE	BY	DESCRIPTION
1	05.29.18	--	BLDG. DEPT. PLAN CHECK
2			
3			
4			
5			

PROJECT # 17XXX

BURGER LOUNGE III LLC
FOUNTAINS AT ROSEVILLE
1198 ROSEVILLE PKWY. #135 - ROSEVILLE, CA 95678

DATE: 04/06/18

A0.2

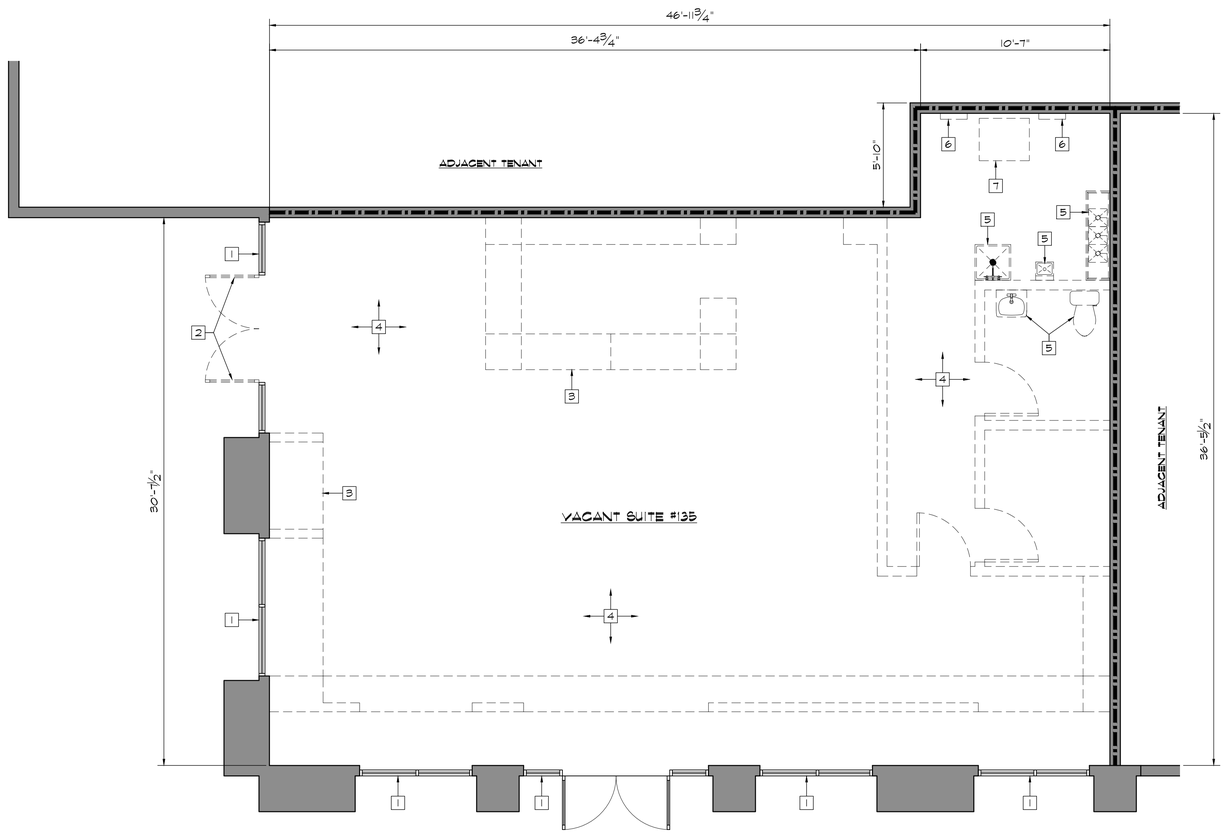

0' 2' 4'
SCALE: 1/4" = 1'-0"

NORTH

1 EXISTING / DEMOLITION FLOOR PLAN

SCALE: 1/4"=1'-0"

WALL LEGEND

- EXISTING EXTERIOR STUD WALL TO REMAIN
- EXISTING 1-HR FIRE RATED STUD WALL TO REMAIN
- EXISTING MTL. STUD PARTITION WALL TO REMOVE

KEY NOTES

1. (E) 9'-0" ALUMINUM / GLASS STOREFRONT TO REMAIN
2. REMOVE (E) STOREFRONT DOORS; RELOCATE (1) DOOR PER PROPOSED FLOOR PLAN
3. DEMO & REMOVE (E) BUILT-IN CABINETS / FIXTURES ETC.
4. DEMO & REMOVE (E) FLOORING, CEILINGS, LIGHTING, HVAC DUCTWORK THROUGHOUT; CLEAN & PREP (E) CONC. SLAB FOR (N) TENANT FLOOR FINISHES.
5. REMOVE (E) PLUMBING FIXTURES & CAP-OFF PLUMBING
6. (E) ELECTRICAL PANEL (SHOWN FOR REFERENCE) TO BE RELOCATED BY LANDLORD UNDER SEPARATE PERMIT
7. (E) FLOOR MOUNTED ELECTRICAL TRANSFORMER (SHOWN FOR REFERENCE) TO BE RELOCATED BY LANDLORD UNDER SEPARATE PERMIT

ADDITIONAL NOTES

1. G.C. TO VERIFY ALL EXISTING CONDITIONS
2. DIMENSIONS ARE TO FACE OF SHEATHING U.O.N.
3. WORK ON THIS PROJECT INCLUDES EVERYTHING NECESSARY AND INCIDENTAL TO COMPLETING THE DEMOLITION AS INDICATED ON DRAWINGS.
4. CONTRACTOR SHALL ADEQUATELY PROTECT PERSONNEL AND PUBLIC FROM HARM AND ACCIDENT DURING DEMOLITION OPERATIONS BY ERECTION OF PROPER BARRICADES, SIGNS AND LIGHTING.
5. EXISTING TENANT AND SURFACES ADJACENT TO DEMOLITION OPERATIONS SHALL BE ADEQUATELY PROTECTED.
6. PROVIDE NECESSARY RAMPS AND DUMPSTERS FOR REMOVAL OF ALL DEBRIS. DO NOT USE EXISTING DUMPSTERS.
7. DISPOSAL AND CLEANUP : ALL PRODUCTS OF DEMOLITION, RUBBISH AND DEBRIS SHALL BE HAULED AWAY FROM THE SITE PROMPTLY AND LEGALLY DISPOSED OF BY CONTRACTOR. CONTRACTOR SHALL PAY ALL DUMP FEES. PITS SHALL NOT BE DUG AND PRODUCTS OF DEMOLITION SHALL NOT BE BURIED ON SITE.

CITY STAMP

THESE DRAWINGS AND SPECIFICATIONS ARE CONFIDENTIAL AND SHALL REMAIN THE SOLE PROPERTY OF BAKER ARCHITECTURE, WHICH IS THE OWNER OF COPYRIGHT IN THIS WORK. THEY SHALL NOT BE REPRODUCED IN WHOLE OR IN PART, SHARED WITH THIRD PARTIES OR USED IN ANY MANNER ON OTHER PROJECTS OR EXTENSIONS TO THIS PROJECT WITHOUT THE PRIOR WRITTEN CONSENT OF BAKER ARCHITECTURE.

LICENSED ARCHITECT
RAYMOND BAKER
No. C28547
REN. 6-19
STATE OF CALIFORNIA

BAKER [b a] architecture
4080 CENTRE ST, STE #203
SAN DIEGO, CA 92103 TEL.
(619) 281-5937
www.bakerarchitecture.com

REVISION SCHEDULE

REV	DATE	BY	DESCRIPTION
1	05.29.18	--	BLDG. DEPT. PLAN CHECK
2			
3			
4			
5			

PROJECT # 17XXX

BURGER LOUNGE III LLC
FOUNTAINS AT ROSEVILLE
1198 ROSEVILLE PKWY. #135 - ROSEVILLE, CA 95678

DATE: 04/06/18

A1

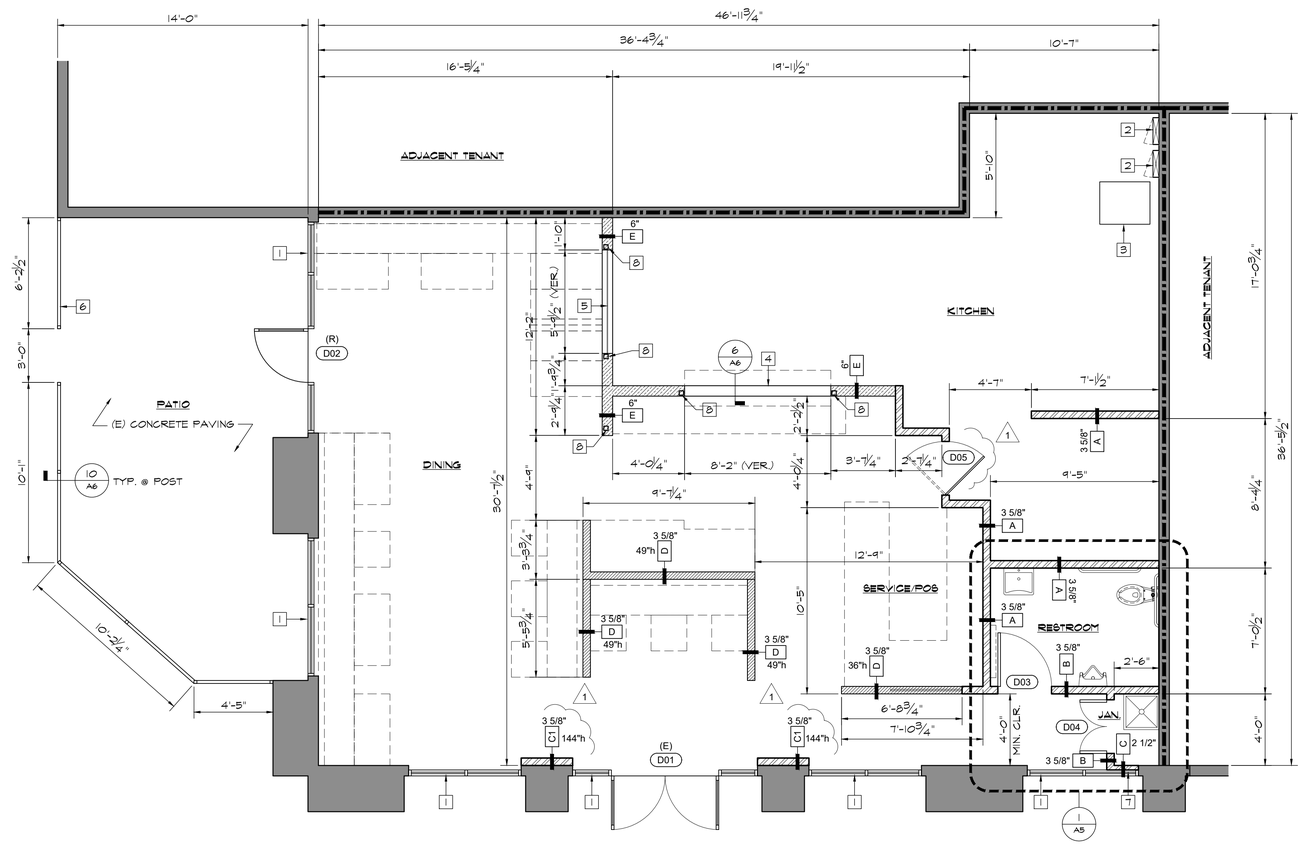

WALL LEGEND

- EXISTING EXT. STUD WALL TO REMAIN
- EXISTING 1-HR FIRE RATED MTL. STUD WALL TO REMAIN REF. WALL SECTION THIS SHEET (UL DESIGN #U419)
- NEW FULL HT. MTL. STUD PARTITION WALL PER PLAN
- NEW 8'-0"h MTL. STUD PARTITION WALL PER PLAN
- NEW MTL. STUD PONY WALL PER PLAN
- A — WALL TYPE; STUD SIZE NOTED - SEE DTL. #1/A6
- B — WALL TYPE; STUD SIZE NOTED - SEE DTL. #2/A6
- C — WALL TYPE; STUD SIZE NOTED - SEE DTL. #3/A6
- C1 — WALL TYPE; STUD SIZE NOTED - SEE DTL. #3/A6
- D — WALL TYPE; STUD SIZE NOTED - SEE DTL. #4/A6
- E — WALL TYPE; STUD SIZE NOTED - SEE DTL. #5/A6

KEY NOTES

1. (E) 9'-0" ALUMINUM / GLASS STOREFRONT
2. ELECTRICAL PANEL (BY LANDLORD)
3. FLOOR MOUNTED ELECTRICAL TRANSFORMER (BY LANDLORD)
4. PASS-THRU OPENING IN WALL TO FIT CUSTOM S/S SHELF PER FOOD SERVICE DWGS.
5. GLASS WINDOW IN WALL - COORDINATE WITH INT. DESIGN DWGS.
6. STEEL & WOOD PATIO RAILING - SEE INT. DESIGN DWGS. FOR CONSTRUCTION / FINISH DETAILS
7. OPAQUE WINDOW FILM ON INTERIOR FACE OF GLASS @ WALL FURRING
8. STEEL SCAFCO PONY WALL SUPPORT POST - SEE SHT. A6 OFFSET POST IN WALL TO ALLOW FOR CONDUITS / PIPING TO PASS OVER POST WITHIN WALL

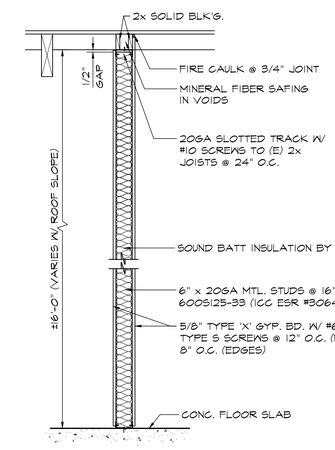

1-HR WALL SECTION

EXISTING 1-HR RATED WALL - WALL SECTION SHOWN FOR REFERENCE. G.C. TO VERIFY ALL EXISTING CONDITIONS IN FIELD

ADDITIONAL NOTES

1. G.C. TO VERIFY ALL EXISTING CONDITIONS
2. DIMENSIONS ARE TO FACE OF SHEATHING U.O.N.
3. G.C. TO PROVIDE PLYWD. BACKING OR WOOD BLOCKING IN WALLS @ ALL WALL MNTD. EQUIPMENT / FIXTURE LOCATIONS. SEE FOOD SERVICE DWGS.
4. SEE INTERIOR DESIGN DWGS. FOR ADD'L. INFO. NOT SHOWN

CITY STAMP

1 CONSTRUCTION FLOOR PLAN

SCALE: 1/4"=1'-0"

LICENSED ARCHITECT KAMBIZ BAKER No. C28547 REN. 6-19 STATE OF CALIFORNIA

BAKER [b a] architecture

4080 CENTRE ST, STE #203
SAN DIEGO, CA 92103 TEL.
(619) 281-5937
www.bakerarchitecture.com

REVISION SCHEDULE			
REV	DATE	BY	DESCRIPTION
1	05.29.18	--	BLDG. DEPT. PLAN CHECK
2			
3			
4			
5			

PROJECT # 17XXX

BURGER LOUNGE III LLC

FOUNTAINS AT ROSEVILLE
1198 ROSEVILLE PKWY. #135 - ROSEVILLE, CA 95678

DATE: 04/06/18

A2

THESE DRAWINGS AND SPECIFICATIONS ARE CONFIDENTIAL AND SHALL REMAIN THE SOLE PROPERTY OF BAKER ARCHITECTURE, WHICH IS THE OWNER OF COPYRIGHT IN THIS WORK. THEY SHALL NOT BE REPRODUCED IN WHOLE OR IN PART, SHARED WITH THIRD PARTIES OR USED IN ANY MANNER ON OTHER PROJECTS OR EXTENSIONS TO THIS PROJECT WITHOUT THE PRIOR WRITTEN CONSENT OF BAKER ARCHITECTURE.

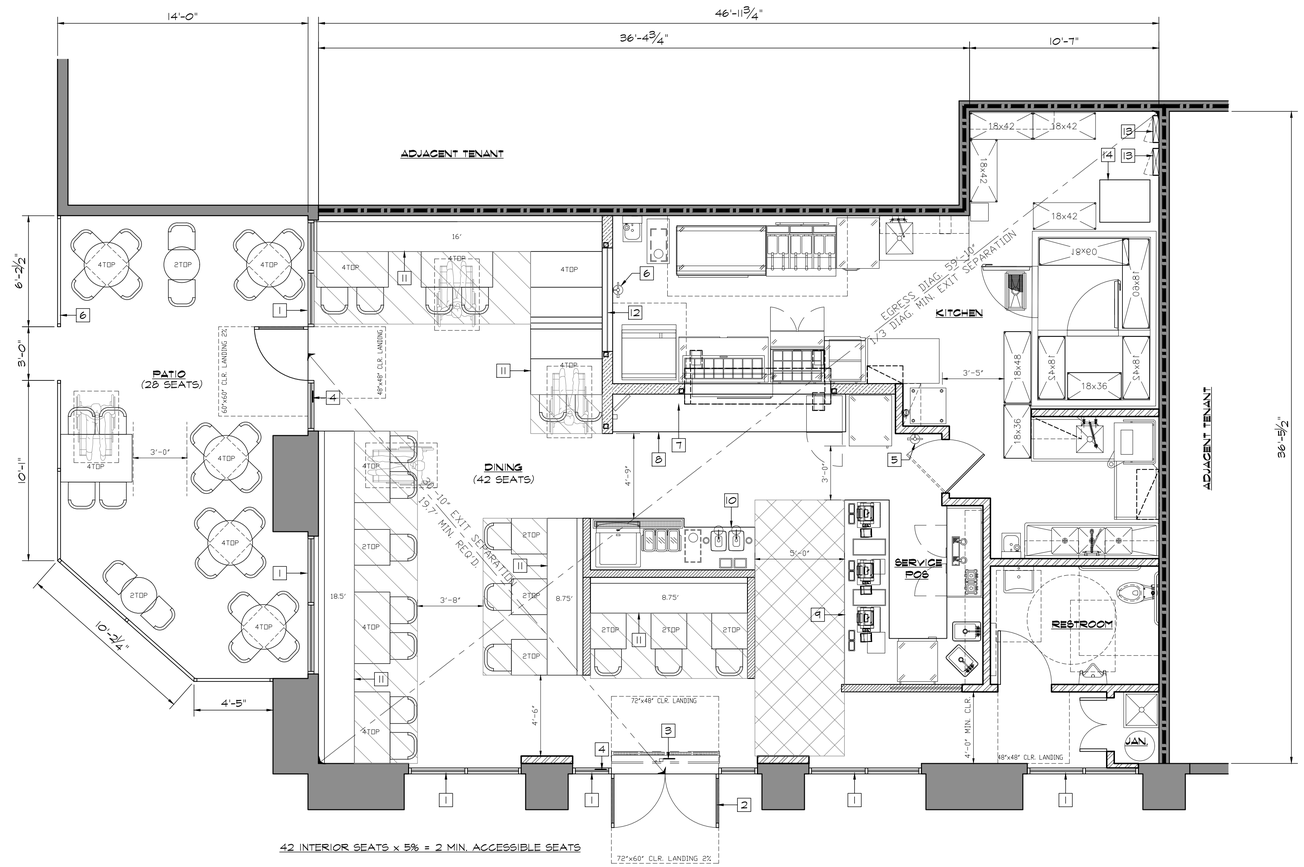

FLOOR AREA LEGEND

NON-FIXED SEATING (1 OCC / 15 S.F.)

QUE LINE AREA (1 OCC / 5 S.F.)

SCALE: 1/4" = 1'-0"

NORTH

WALL LEGEND

- EXISTING EXT. STUD WALL TO REMAIN
- EXISTING 1-HR FIRE RATED MTL. STUD WALL TO REMAIN
- NEW FULL HT. MTL. STUD PARTITION WALL PER PLAN
- NEW 8'-0"h MTL. STUD PARTITION WALL PER PLAN
- NEW MTL. STUD PONY WALL PER PLAN

KEY NOTES

1. (E) 9'-0"h ALUMINUM / GLASS STOREFRONT
2. 5" x 5" INTERNATIONAL SYMBOL OF ACCESSIBILITY DECAL AFFIXED TO GLAZING @ 60" A.F.F.
3. OCCUPANT LOAD SIGN (66 OCCUPANTS MAX.) PER CBC 1004.3 ABOVE STOREFRONT DOORS (V.I.F.)
4. TACTILE EXIT SIGN - SEE DTL. ON SHEET A7
5. CLASS 2-A:10-B:C (5 lb) PORTABLE FIRE EXTINGUISHER (VERIFY MOUNTING LOCATION)
6. CLASS "K" (6 LITER) PORTABLE FIRE EXTINGUISHER (VERIFY MOUNTING LOCATION)
7. CUSTOM STAINLESS STEEL PASS-THRU SHELF PER FOOD SERVICE DWGS.
8. CUSTOM STAINLESS STEEL CABINET / COUNTER PER FOOD SERVICE DWGS.
9. CUSTOM MILLWORK POS/SERVICE CABINET W/ COUNTERTOP @ 34" A.F.F. (MAX.) - SEE I.D. DWGS. FOR DETAILS
10. CUSTOM MILLWORK BEVERAGE CABINET W/ COUNTERTOP @ 34" A.F.F. (MAX.) - SEE I.D. & FOOD SERVICE DWGS. FOR DETAILS
11. CUSTOM BUILT-IN SEATING - SEE I.D. DWGS. FOR DETAILS
12. WINDOW - SEE I.D. DWGS. FOR DETAILS
13. ELECTRICAL PANEL (BY LANDLORD)
14. FLOOR MOUNTED ELECTRICAL TRANSFORMER (BY LANDLORD)

OCCUPANT LOAD CALCULATION

AREA SUMMARY:

DINING (GROSS AREA):	722 S.F.
KITCHEN/SERVICE:	616 S.F.
RESTROOM / JAN. / HALLWAY:	136 S.F.
TOTAL AREA:	1,474 S.F.

CALCULATION:

DINING:	
FIXED BENCH SEATING:	52 lf / 1.5 = 35 OCC.
FIXED BOOTH SEATING:	8 sf / 2 = 4 OCC.
NON-FIXED SEATING:	186 sf / 15 = 12 OCC.
QUE LINE AREA:	75 sf / 5 = 15 OCC.
SERVICE / KITCHEN:	616 / 200 = 3 OCC.
RESTROOM / JAN. / HALLWAY:	(NOT INCLUDED)
TOTAL INTERIOR OCCUPANTS:	69 OCC.

EXTERIOR PATIO:

NON-FIXED SEATING:	347 sf / 15 = 23 OCC.

INTERIOR FINISH REQUIREMENTS

INTERIOR FINISH MATERIALS APPLIED TO WALL & CEILINGS SHALL BE TESTED AS SPECIFIED IN SECTION 803 CBC.

A-2 OCC. - SPRINKLERED BUILDING

INTERIOR EXIT PASSAGE WAYS: CLASS B RATING
CORRIDORS: CLASS B RATING
ROOMS & ENCLOSED SPACES: CLASS C RATING

CLASS A: FLAME SPREAD INDEX 0-25 / SMOKE DEVELOPED INDEX 0-450
CLASS B: FLAME SPREAD INDEX 26-75 / SMOKE DEVELOPED INDEX 0-450
CLASS C: FLAME SPREAD INDEX 76-200 / SMOKE DEVELOPED INDEX 0-450

ADDITIONAL NOTES

1. G.C. TO VERIFY ALL EXISTING CONDITIONS
2. DIMENSIONS ARE TO FACE OF SHEATHING U.O.N.
3. TABLES & CHAIRS PROVIDED BY OWNER; CONTRACTOR TO COORDINATE INSTALLATION
4. ACCESSIBLE TABLES ARE TO BE NO MORE THAN 34" A.F.F. WITH KNEE CLEARANCE AT LEAST 27" HIGH, 30" WIDE AND 19" DEEP W/ NO FIXED SEATING; A MIN. 5% OF ALL SEATING SHALL BE MADE ACCESSIBLE
5. SEE INTERIOR DESIGN DRAWINGS FOR ELEVATIONS, DETAILS & FINISHES FOR FRONT OF HOUSE AREAS
6. SEE FOOD SERVICE DRAWINGS FOR EQUIPMENT SCHEDULE, ELEVATIONS & DETAILS FOR BACK OF HOUSE AREAS

CITY STAMP

1 ARCHITECTURAL FLOOR PLAN

SCALE: 1/4" = 1'-0"

THESE DRAWINGS AND SPECIFICATIONS ARE CONFIDENTIAL AND SHALL REMAIN THE SOLE PROPERTY OF BAKER ARCHITECTURE, WHICH IS THE OWNER OF COPYRIGHT IN THIS WORK. THEY SHALL NOT BE REPRODUCED IN WHOLE OR IN PART, SHARED WITH THIRD PARTIES OR USED IN ANY MANNER ON OTHER PROJECTS OR EXTENSIONS TO THIS PROJECT WITHOUT THE PRIOR WRITTEN CONSENT OF BAKER ARCHITECTURE.

LICENSED ARCHITECT
RAYMOND BAKER
No. C28547
REN. 6-19
STATE OF CALIFORNIA

BAKER [b a] architecture
4080 CENTRE ST, STE #203
SAN DIEGO, CA 92103 TEL.
(619) 281-5937
www.bakerarchitecture.com

REVISION SCHEDULE

REV	DATE	BY	DESCRIPTION
1	05.29.18	--	BLDG. DEPT. PLAN CHECK
2			
3			
4			
5			

PROJECT # 17XXX

BURGER LOUNGE III LLC
FOUNTAINS AT ROSEVILLE
1198 ROSEVILLE PKWY. #135 - ROSEVILLE, CA 95678

DATE: 04/06/18

A3

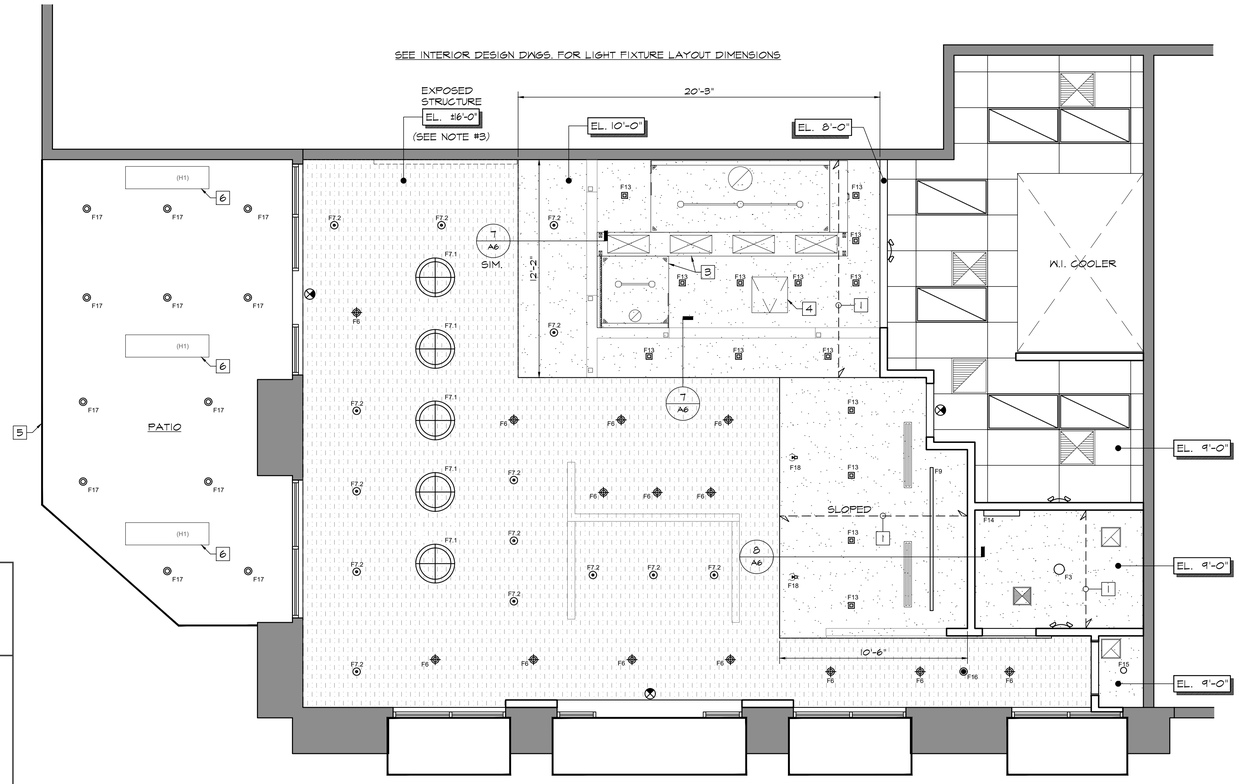

1 PATIO HEATER SPECIFICATIONS

SPECIFICATIONS
General Specifications

Rating (Input: Natural and L.P. Gas) 0-4500 ft elevation.

STANDARD SERIES

Model	Min Input (BTU/Hr)	Max	Length
PH-40A	20,000	40,000	11.5'
PH-50A	25,000	50,000	16.5'
PH-75A	37,500	75,000	21.5'

HIGH OUTPUT SERIES (patented)

Model	Min Input (BTU/Hr)	Max	Length
PH-40 HO	20,000	40,000	5'
PH-75 HO	37,500	75,000	10'

Gas Pressure at Manifold
Natural Gas ..... 3.5" W.C.
L.P. Gas ..... 10.5" W.C.
Gas Connection Size ..... 0.5" N.P.T.

Gas Inlet Pressure

Gas	Minimum	Maximum
Natural	4.5" W.C.	14.0" W.C.
L.P.	11.5" W.C.	14.0" W.C.

Electrical Rating
DSI Ignition
120v, 60 Hz, 1 Amps
24 volt low voltage On/Off – Modulating control panel

Standard Equipment
Variable input temperature control panel, modulating gas burner, low noise combustion air blower, visual burner inspection sight glass, air proving safety switch, 3-try spark ignition control, 100% safety shut off valves, 4" heat treated aluminized radiant emitter, aluminum reflector, heat economizer baffle, stainless steel hangers and burner-head, decorative grill, indicator light. Stainless steel construction on High Output Series.

Optional Equipment
-Elbow kit / 180 degree U-Bend kit for PH-50 and PH-75
-Stainless Steel Radiant Emitter
-24 Volt Electrical Supply

CLEARANCE TO COMBUSTIBLES

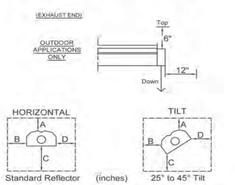

Installation Type 1

Input	A	B	C	D
40	4	12	34	12
50	4	12	41	12
75	4	15	46	15
40 HO	8	17	41	17
75 HO	6	12	42	12

Installation Type 2

Input	A	B	C	D
40	4	4	31	28
50	4	4	35	28
75	4	4	40	31
40 HO	8	4	28	25
75 HO	6	4	31	22

DIMENSIONS

MODEL	LENGTH
PH40	132"
PH50	165"
PH75	198"
PH40 HO	64"
PH75 HO	124"
WIDTH OF ALL UNITS	18"

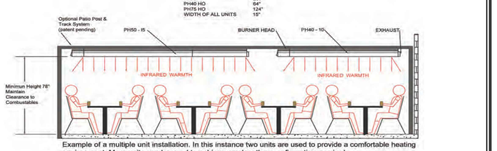

Example of a multiple unit installation. In this instance two units are used to provide a comfortable heating environment. More units can be used to achieve any length or configuration required.
Calcana's design expertise is offered to all customers to ensure proper layout & performance.

©All rights reserved. No part of this work herein may be reproduced or copied in any form or by any means - graphic, electronic, or mechanical, including photocopying, recording, taping or information storage and retrieval systems - without written consent from CALCANA INDUSTRIES LTD. The information herein is current at the time of printing, but may be subject to change at any time without notice. 2010 - CALCANA INDUSTRIES LTD.
PRINTED IN CANADA BY TOPLINE PRINTING

RCP LEGEND

SEE INTERIOR DESIGN SHEET I-7.1 FOR LIGHT FIXTURE SPECIFICATIONS

- SUSPENDED CEILING GRID SYSTEM ARMSTRONG CEILINGS VL #868, 24"x 48", VINYL FACED CEILING TILE W/ 15/16" PRELUDE XL TEE GRID SYSTEM (WHITE) OR EQUAL (ICC ESR #1308) SEE DTLS. #6, #7, #8/A5
- PAINTED GYPSUM BOARD CEILING
- WHITE SCRIM PAPER APPLIED TO UNDERSIDE OF (E) ROOF JOISTS (EXPOSED TO BELOW)
- F1 — RECESSED 3" x 4' LIGHT
- F2 — RECESSED 2' x 4' LIGHT
- F3 — SURFACE MOUNT LIGHT
- F6 — PENDANT MOUNT TUBE LIGHT
- F7.2 — PENDANT LIGHT
- F7.1 — PENDANT LIGHT
- F9 — LINEAR WALL WASH LIGHT
- F10 — LED STRIP ACCENT LIGHT
- F13 — SQUARE RECESSED LIGHT
- F14 — RESTROOM VANITY LIGHT
- F17 — PENDANT MOUNT TUBE LIGHT (PATIO)
- F18 — SPOT LIGHT (ADJUSTABLE)
- WALL MOUNTED EMERGENCY LIGHT 90 MINUTE BATTERY BACK-UP POWER SUPPLY
- ILLUMINATED EXIT SIGN 90 MINUTE BATTERY BACK-UP POWER SUPPLY (DIRECTIONAL CHEVRON AS INDICATED)
- LINEAR TYPE SUPPLY AIR DIFFUSER / RETURN AIR SEE MECH'L. DWGS.
- SQUARE TYPE SUPPLY AIR DIFFUSER - SEE MECH'L. DWGS
- SQUARE TYPE RETURN AIR GRILLE - SEE MECH'L. DWGS.
- EXHAUST FAN - SEE MECH'L. DWGS. 12 AIR CHANGES/HR.

KEY NOTES

1. 362S162-43 (3 5/8" x 18GA) MTL. STUD CEILING JOISTS @ 16" O.C. MAX. SPAN: 13'-4" @ 16" O.C. (L/240 @ 6 PSF)
2. ICC-ESR #3064P (ARROWS INDICATE SPAN DIRECTION)
3. KITCHEN EXHAUST HOOD - SEE FOOD SERVICE & MECHANICAL DWGS.
4. 24"x24" STL. ACCESS PANEL FLUSH W/ CEILING AS REQ'D. TO ACCESS HOOD DUCT CLEAN-OUTS, UTILITIES ETC.; FIELD VERIFY LOCATIONS & QTY. - PAINT TO MATCH ADJACENT GYP. BD. FINISH
5. STL. FRAMED / CANVAS PATIO COVER BY OTHERS UNDER SEPARATE PERMIT.
6. GAS FIRED PATIO HEATER - CALCAN #PH-40 HO; MOUNT TO UNDER SIDE OF PATIO AWNING STRUCTURE W/ ALL REQUIRED CLEARANCES TO COMBUSTIBLES PER MFR. SPECS. HEATER ATTACHMENT METHOD TO AWNING STRUCTURE TO BE BY AWNING DESIGNER & INCLUDED IN THE SEPARATE AWNING PERMIT. (OUTDOOR GAS FIRED PATIO HEATERS SHALL BE LISTED & COMPLY WITH ALL THE REQUIREMENTS OF CFC 603.5.1 & 603.5.2 & CCR TITLE 19, DIVISION 1, 3.17 (a) & (b))

ADDITIONAL NOTES

1. G.C. TO VERIFY ALL EXISTING CONDITIONS
2. DIMENSIONS ARE TO FACE OF SHEATHING U.O.N.
3. SEE INTERIOR DESIGN DRAWINGS FOR ADDITIONAL CEILING DETAILS & FINISHES

CITY STAMP

0' 2' 4'
SCALE: 1/4" = 1'-0"

NORTH

1 ARCHITECTURAL REFLECTED CEILING PLAN

SCALE: 1/4"=1'-0"

THESE DRAWINGS AND SPECIFICATIONS ARE CONFIDENTIAL AND SHALL REMAIN THE SOLE PROPERTY OF BAKER ARCHITECTURE, WHICH IS THE OWNER OF COPYRIGHT IN THIS WORK. THEY SHALL NOT BE REPRODUCED IN WHOLE OR IN PART, SHARED WITH THIRD PARTIES OR USED IN ANY MANNER ON OTHER PROJECTS OR EXTENSIONS TO THIS PROJECT WITHOUT THE PRIOR WRITTEN CONSENT OF BAKER ARCHITECTURE.

LICENSED ARCHITECT
KAMPSON BAKER
No. C28547
REN. 6-19
STATE OF CALIFORNIA

BAKER [b a] architecture
4080 CENTRE ST, STE #203
SAN DIEGO, CA 92103 TEL.
(619) 281-5937
www.bakerarchitecture.com

REVISION SCHEDULE

REV	DATE	BY	DESCRIPTION
1	05.29.18	--	BLDG. DEPT. PLAN CHECK
2			
3			
4			
5			

PROJECT # 17XXX

BURGER LOUNGE III LLC
FOUNTAINS AT ROSEVILLE
1198 ROSEVILLE PKWY. #135 - ROSEVILLE, CA 95678

DATE: 04/06/18

A4

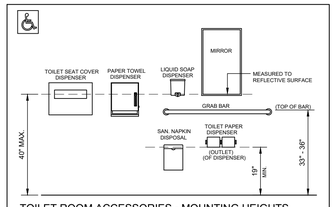

TOILET ROOM ACCESSORIES - MOUNTING HEIGHTS

RESTROOM ACCESSORIES

1. MIRROR
2. SURFACE MOUNT LIQUID SOAP DISPENSER
3. RECESSED HAND DRYER
4. 36" GRAB BAR
5. 42" GRAB BAR
6. RECESSED SEAT COVER DISPENSER
7. RECESSED TOILET PAPER DISPENSER
8. RECESSED SANITARY NAPKIN DISPOSAL
9. SURFACE MOUNT DIAPER CHANGING TABLE 35.18" x 22.25" x 3.75"

SEE INTERIOR DESIGN DWGS. FOR RESTROOM ACCESSORY SPECIFICATIONS

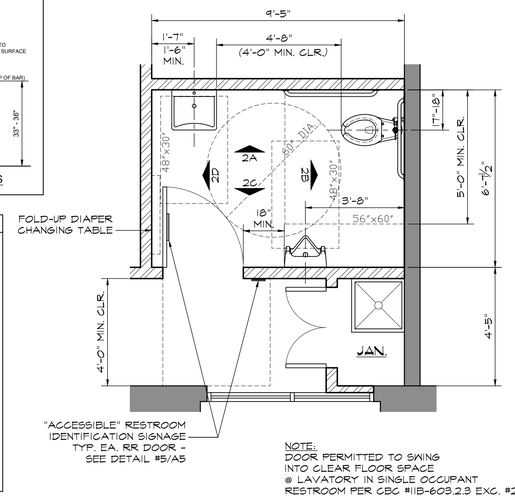

NOTE:
DOOR PERMITTED TO SWING INTO CLEAR FLOOR SPACE @ LAVATORY IN SINGLE OCCUPANT RESTROOM PER CBC #11B-603.2.3 EXC. #2

1 ENLARGED RESTROOM PLAN — SCALE: 3/8"=1'-0"

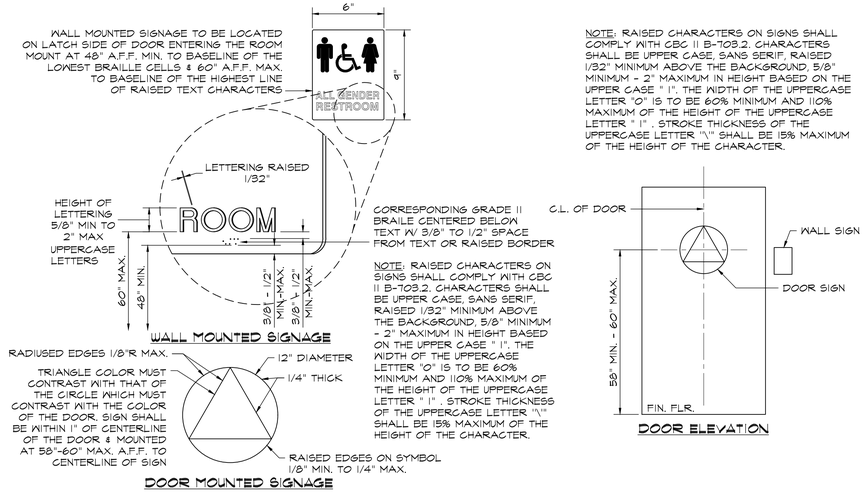

NOTE: RAISED CHARACTERS ON SIGNS SHALL COMPLY WITH CBC 11 B-703.2. CHARACTERS SHALL BE UPPER CASE, SANS SERIF, RAISED 1/32" MINIMUM ABOVE THE BACKGROUND, 5/8" MINIMUM - 2" MAXIMUM IN HEIGHT BASED ON THE UPPER CASE " I ", THE WIDTH OF THE UPPERCASE LETTER "O" IS TO BE 60% MINIMUM AND 110% MAXIMUM OF THE HEIGHT OF THE UPPERCASE LETTER " I " . STROKE THICKNESS OF THE UPPERCASE LETTER "\" SHALL BE 15% MAXIMUM OF THE HEIGHT OF THE CHARACTER.

NOTE: RAISED CHARACTERS ON SIGNS SHALL COMPLY WITH CBC 11 B-703.2. CHARACTERS SHALL BE UPPER CASE, SANS SERIF, RAISED 1/32" MINIMUM ABOVE THE BACKGROUND, 5/8" MINIMUM - 2" MAXIMUM IN HEIGHT BASED ON THE UPPER CASE " I ", THE WIDTH OF THE UPPERCASE LETTER "O" IS TO BE 60% MINIMUM AND 110% MAXIMUM OF THE HEIGHT OF THE UPPERCASE LETTER " I " . STROKE THICKNESS OF THE UPPERCASE LETTER "\" SHALL BE 15% MAXIMUM OF THE HEIGHT OF THE CHARACTER.

5 RESTROOM SIGNAGE — SCALE: N.T.S.

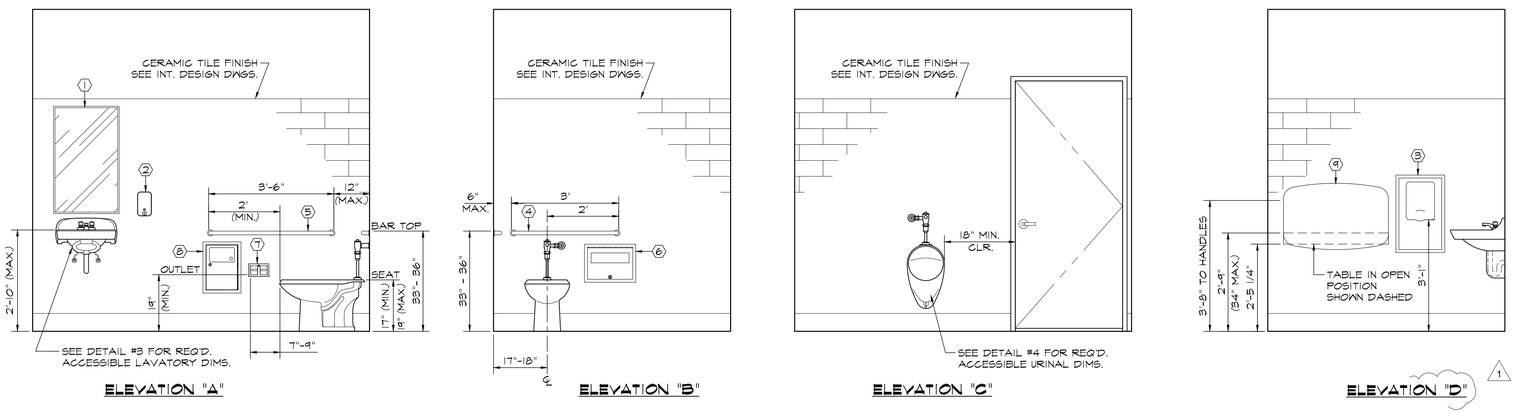

2 RESTROOM ELEVATIONS — SCALE: 1/2"=1'-0"

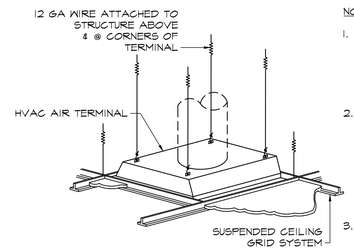

NOTES:

1. AIR TERMINALS WEIGHING 20 - 56 POUNDS SHALL BE PROVIDED W/ (2) 12 GA WIRE ATTACHED TO THE TERMINAL HOUSING & THE STRUCTURE ABOVE - THESE WIRES MAY BE SLACK
2. AIR TERMINALS WEIGHING MORE THAN 56 POUNDS SHALL BE INDEPENDENTLY SUPPORTED W/ (4) 12 GA WIRE ATTACHED TO THE TERMINAL HOUSING CORNERS & THE STRUCTURE ABOVE - THE SUSPENDED CEILING SHALL NOT DIRECTLY SUPPORT THE AIR TERMINAL
3. PROVIDE POSITIVE ATTACHMENT FROM THE GRID TO THE AIR TERMINAL

7 CEILING DIFFUSER DETAIL — SCALE: N.T.S.

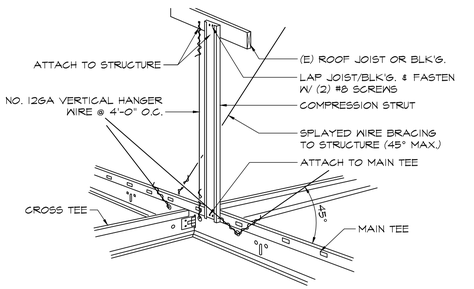

COMPRESSION STRUT	MAX. LENGTH
2505125-33	
2 1/2" x 20 ga. METAL STUD	8'-0"
3625162-33	
3 5/8" x 20 ga. METAL STUD	10'-0"

NOTES:

COMPRESSION STRUT TO BE PLACE ALONG GRID SYSTEM @ 12'-0" O.C. BOTH WAYS & 6'-0" MAX. FROM PERIMETER WALLS.

ISOMETRIC COMPRESSION STRUT DETAIL
N.T.S.

TYPICAL LATERAL BRACING
N.T.S.

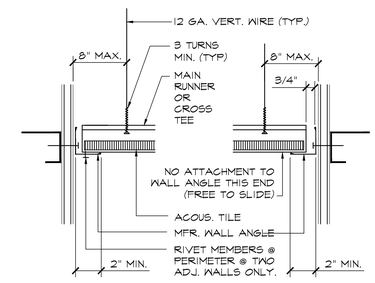

DETAIL @ PERMITER WALL
N.T.S.

NOTES:

1. EXCEPT WHERE RIGID BRACES ARE USED TO LIMIT LATERAL DEFLECTION, SPRINKLER HEADS AND OTHER PENETRATIONS THROUGH THE CEILING TILE REQUIRE MINIMUM 2-INCH RINGS, SLEEVES OR ADAPTERS THAT WILL ALLOW A MINIMUM 1-INCH CEILING MOVEMENT IN ALL HORIZONTAL DIRECTIONS. ALTERNATIVELY, A SWING JOINT CAN BE PROVIDED AT THE TOP OF THE SPRINKLER HEAD EXTENSION TO ACCOMMODATE THE 1-INCH MOVEMENT.
2. HEAVY DUTY T-BAR GRID MEMBERS SHALL BE USED THROUGHOUT.
3. ATTACHMENT METHOD OF LIGHT FIXTURES TO GRID MEMBERS SHALL BE CAPABLE TO WITHSTAND 100% OF THE LIGHT FIXTURE WEIGHT.
4. CEILINGS LESS THAN 1000 S.F. ARE EXEMPT FROM THE HORIZONTAL RESTRAINT REQUIREMENT.
5. CEILINGS GREATER THAN 2500 S.F. SHALL BE PROVIDED WITH A SEISMIC SEPARATION JOINT.
6. THE SUSPENDED CEILING LATERAL FORCE-BRACING MEMBERS SHALL BE LOCATED A MINIMUM OF 6 INCHES FROM ALL HORIZONTAL PIPING OR DUCT WORK THAT ARE NOT PROVIDED WITH BRACING RESTRAINTS FOR HORIZONTAL FORCES. CABLE TRAYS AND ELECTRICAL CONDUITS SHALL BE SUPPORTED INDEPENDENTLY OF THE CEILING

8 SUSP. CEILING — SCALE: N.T.S.

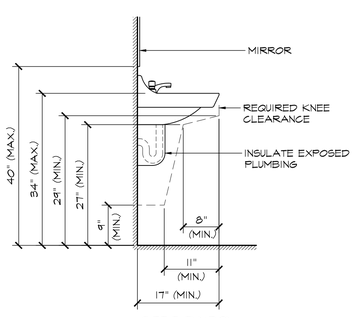

SIDE ELEVATION

NOTE: FAUCET SHALL BE OPERABLE WITH ONE HAND & NOT REQUIRE TIGHT GRASPING, PINCHING OR TWISTING OF THE WRIST - 5lb MAX. PRESSURE TO OPERATE FAUCET CONTROLS.

3 ACCESSIBLE LAVATORY — SCALE: N.T.S.

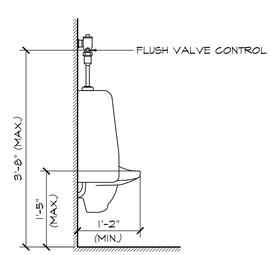

SIDE ELEVATION

NOTE: FLUSH CONTROL SHALL BE OPERABLE WITH ONE HAND & NOT REQUIRE TIGHT GRASPING, PINCHING OR TWISTING OF THE WRIST - 5lb MAX. PRESSURE TO OPERATE FLUSH CONTROL

4 ACCESSIBLE URINAL — SCALE: N.T.S.

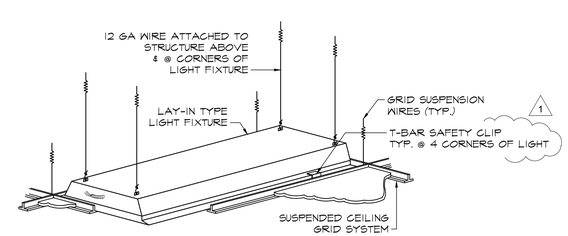

6 LAY-IN LIGHT DETAIL — SCALE: N.T.S.

CITY STAMP

THESE DRAWINGS AND SPECIFICATIONS ARE CONFIDENTIAL AND SHALL REMAIN THE SOLE PROPERTY OF BAKER ARCHITECTURE, WHICH IS THE OWNER OF COPYRIGHT IN THIS WORK. THEY SHALL NOT BE REPRODUCED IN WHOLE OR IN PART, SHARED WITH THIRD PARTIES OR USED IN ANY MANNER ON OTHER PROJECTS OR EXTENSIONS TO THIS PROJECT WITHOUT THE PRIOR WRITTEN CONSENT OF BAKER ARCHITECTURE.

LICENSED ARCHITECT — KARSON BAKER — No. C28547 — REN. 6-19 — STATE OF CALIFORNIA

BAKER [b] [a] architecture
4080 CENTRE ST, STE #203
SAN DIEGO, CA 92103 TEL.
(619) 281-5937
www.bakerarchitecture.com

REVISION SCHEDULE

REV	DATE	BY	DESCRIPTION
1	05.29.18	--	BLDG. DEPT. PLAN CHECK
2			
3			
4			
5			
6			

PROJECT # 17XXX

BURGER LOUNGE III LLC
FOUNTAINS AT ROSEVILLE
1198 ROSEVILLE PKWY. #135 - ROSEVILLE, CA 95678

DATE: 04/06/18

A5

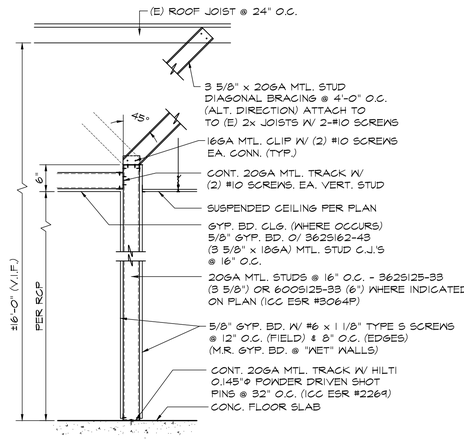

1 WALL SECTION - TYPE 'A' SCALE: N.T.S.

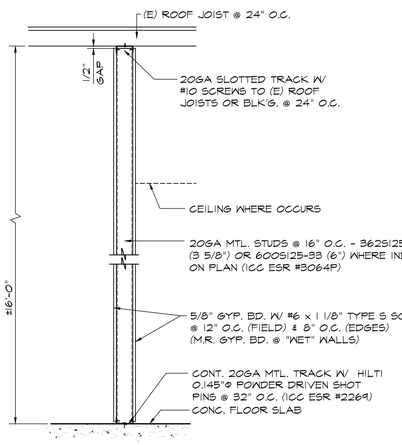

2 WALL SECTION - TYPE 'B' SCALE: N.T.S.

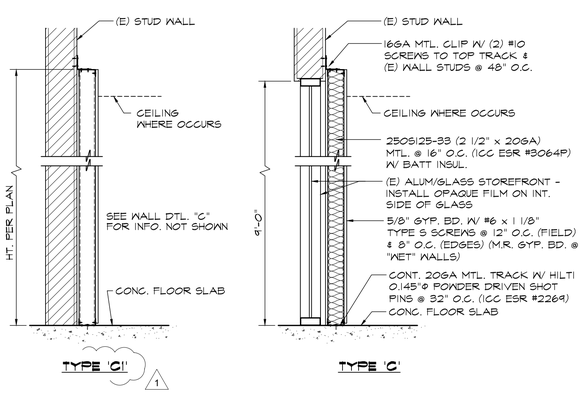

3 WALL SECTION - TYPE 'C' & 'C1' SCALE: N.T.S.

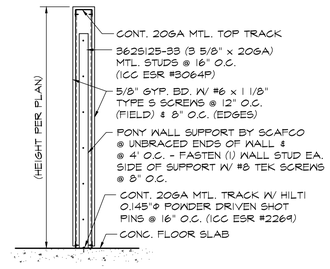

SEE SCAFCO PONY WALL BRACE MFR. DRAWING THIS SHEET

4 WALL SECTION - TYPE 'D' SCALE: N.T.S.

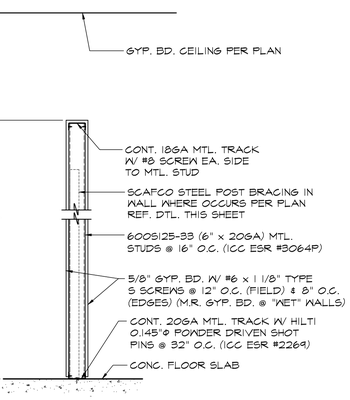

5 WALL SECTION - TYPE 'E' SCALE: N.T.S.

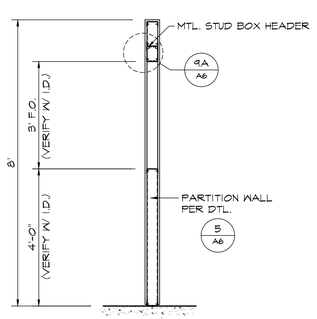

6 WALL SECTION W/ OPENING SCALE: N.T.S.

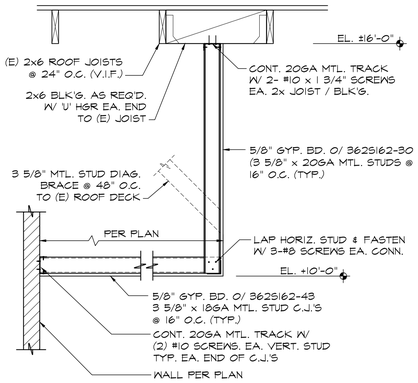

7 SOFFIT SECTION SCALE: N.T.S.

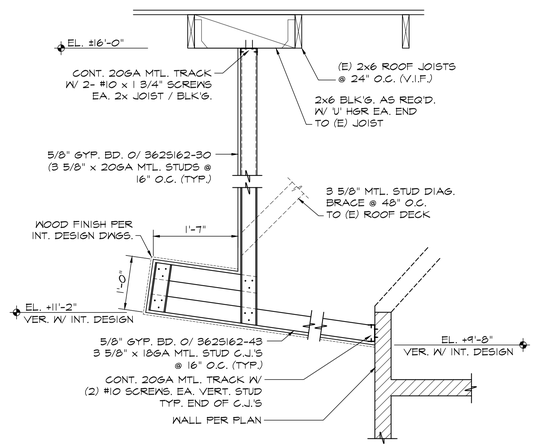

8 SOFFIT SECTION SCALE: N.T.S.

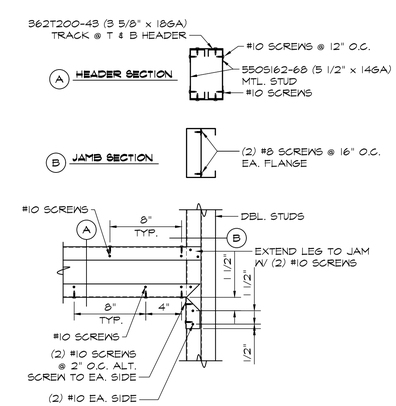

HEADER / JAMB CONNECTION

9 TYP. BOX HEADER DETAIL SCALE: N.T.S.

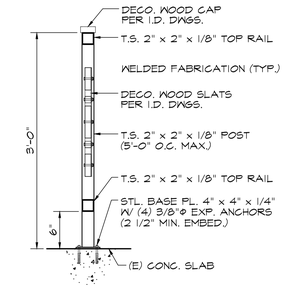

10 PATIO RAILING SECTION SCALE: N.T.S.

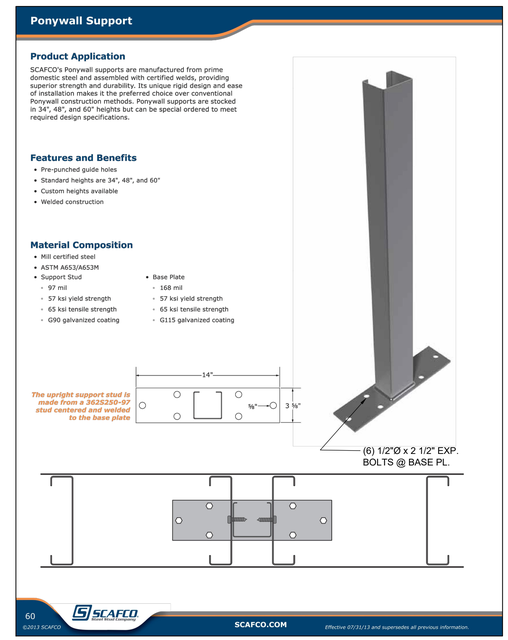

SCAFCO PONY WALL BRACE
(USED IN WALL TYPES 'D' & 'E')

CITY STAMP

THESE DRAWINGS AND SPECIFICATIONS ARE CONFIDENTIAL AND SHALL REMAIN THE SOLE PROPERTY OF BAKER ARCHITECTURE, WHICH IS THE OWNER OF COPYRIGHT IN THIS WORK. THEY SHALL NOT BE REPRODUCED IN WHOLE OR IN PART, SHARED WITH THIRD PARTIES OR USED IN ANY MANNER ON OTHER PROJECTS OR EXTENSIONS TO THIS PROJECT WITHOUT THE PRIOR WRITTEN CONSENT OF BAKER ARCHITECTURE.

LICENSED ARCHITECT KASPERSKE BAKER No. C28547 REN. 6-19 STATE OF CALIFORNIA

BAKER [b] [a] architecture
4080 CENTRE ST, STE #203
SAN DIEGO, CA 92103 TEL.
(619) 281-5937
www.bakerarchitecture.com

REVISION SCHEDULE

REV	DATE	BY	DESCRIPTION
1	05.29.18	--	BLDG. DEPT. PLAN CHECK
2			
3			
4			
5			

PROJECT # 17XXX

BURGER LOUNGE III LLC
FOUNTAINS AT ROSEVILLE
1198 ROSEVILLE PKWY. #135 - ROSEVILLE, CA 95678

DATE: 04/06/18

A6

DOOR SCHEDULE

TAG	TYPE	SIZE	THK.	DOOR MT'L.	DOOR FIN.	FRAME MT'L.	FRAME FIN.	HDWRE. GROUP	RATING	REMARKS
D01	I	PR. 3' x 7'	1.75"	AL/GL	--	AL.	--	1		EXISTING STOREFRONT DOORS
D02	V	3' x 7'	1.75"	AL/GL	--	AL.	--	2		EXISTING STOREFRONT DOOR (RELOCATED)
D03	III	3' x 7'	1.75"	WD/GL	PT.	STL.	FAC.	3		NEW DOOR & FRAME
D04	II	PR. 1'-6" x 7'	1.75"	SCWD	PT.	STL.	FAC.	4		NEW DOORS & FRAME
D05	IV	3' x 7' 1	1.0"	WD./LAM.	-	-	-	-		DBL. ACTING DOORS - ELIASON OR EQUAL IN STAINLESS STEEL CASED OPENING
										ALL NEW INTERIOR DOOR FRAMES TO BE TIMELY OR EQUAL STEEL FRAMES
										SEE INTERIOR DESIGN DWGS. FOR INTERIOR DOOR & TRIM FINISH SPECIFICATIONS.

HARDWARE GROUPS

GROUP 1 - MAIN ENTRANCE

EXISTING HARDWARE

EXTERIOR PULL BAR / INTERIOR PUSH BAR
MORTISE LOCKSET
CONCEALED OVERHEAD CLOSER
ADA COMPLIANT THRESHOLD

GROUP 2 - DINING EXIT

RETROFIT EXISTING HARDWARE

EXISTING EXTERIOR PULL
G.C. TO INSTALL INTERIOR PANIC BAR TO REPLACE PUSH BAR
EXISTING CONCEALED OVERHEAD CLOSER
EXISTING ADA COMPLIANT THRESHOLD

GROUP 3 - RESTROOM

QTY	DESCRIPTION
1	LEVER HARDWARE W/ PRIVACY LOCKSET: SCHLAGE OR EQUAL
3	HINGES: 4.5" BB NRP
1	OVERHEAD CLOSER: NORTON OR EQUAL
1	WALL MNTD. DOOR STOP
1	SILENCER SET
1	ACCESSIBLE IDENTIFICATION SIGNAGE
1	S/S KICK PLATE & PUSH PLATE

GROUP 4 - JANITOR CLOSET

QTY	DESCRIPTION
1	LEVER HARDWARE W/ STOREROOM LOCKSET: SCHLAGE OR EQUAL
1	MANUAL FLUSH BOLT SET (INACTIVE LEAF)
6	HINGES: 4.5" BB NRP

DOOR NOTES

1. DOOR TO BE A MINIMUM SIZE OF 3' IN WIDTH & 6'-8" IN HEIGHT
2. DOOR TO OPEN A MINIMUM OF 90 DEGREES
3. CLEAR WIDTH OF DOORWAY IS 32" MINIMUM
4. BOTTOM 10" OF DOOR SHALL HAVE A SMOOTH SURFACE THAT ALLOWS DOOR TO BE OPENED BY A WHEEL CHAIR FOOT REST
5. 5 POUNDS MAXIMUM PRESSURE TO OPERATE INTERIOR DOORS
6. 5 POUNDS MAXIMUM PRESSURE TO OPERATE EXTERIOR DOORS
7. 15 POUNDS MAXIMUM PRESSURE TO OPERATE FIRE DOOR
8. 48" CLEAR SPACE MUST BE PROVIDE BETWEEN TWO DOORS IN SERIES IN ANY POSITION
9. LATCHING OR LOCKING DOORS THAT ARE HAND OPERATED ARE OPERABLE WITH A SINGLE EFFORT (ex. LEVER, PANIC BAR, PUSH/PULL)
10. DOOR CLOSERS MUST BE SET SO THAT IT TAKES AT LEAST 3 SECONDS TO CLOSE FROM AN OPEN POSITION OF 70 DEGREES TO WITHIN 3" OF THE LATCH
11. ALL EGRESS DOORS SHALL BE READILY OPENABLE FROM THE EGRESS SIDE WITH A SINGLE ACTION, WITHOUT THE USE OF A KEY, THUMB TURN, OR ANY SPECIAL KNOWLEDGE OR EFFORT.
12. ONLY THE MAIN DOORS MAY BE PERMITTED TO HAVE LOCKS IF ALL OF THE FOLLOWING ARE IMPLEMENTED:
    a) THE LOCKING DEVICE IS READILY DISTINGUISHABLE AS LOCKED IN ACCORDANCE WITH CFC 1010.1.9.3.2.1
    A SIGN IS PROVIDED ABOVE MAIN DOOR STATING: "THIS DOOR TO REMAIN UNLOCKED WHEN THIS SPACE IS OCCUPIED" - 1" HIGH LETTERS (MIN.) IN ACCORDANCE WITH CFC 1010.1.9.3.2.2

ACCESSIBLE DOOR MANEUVERING CLEARANCES

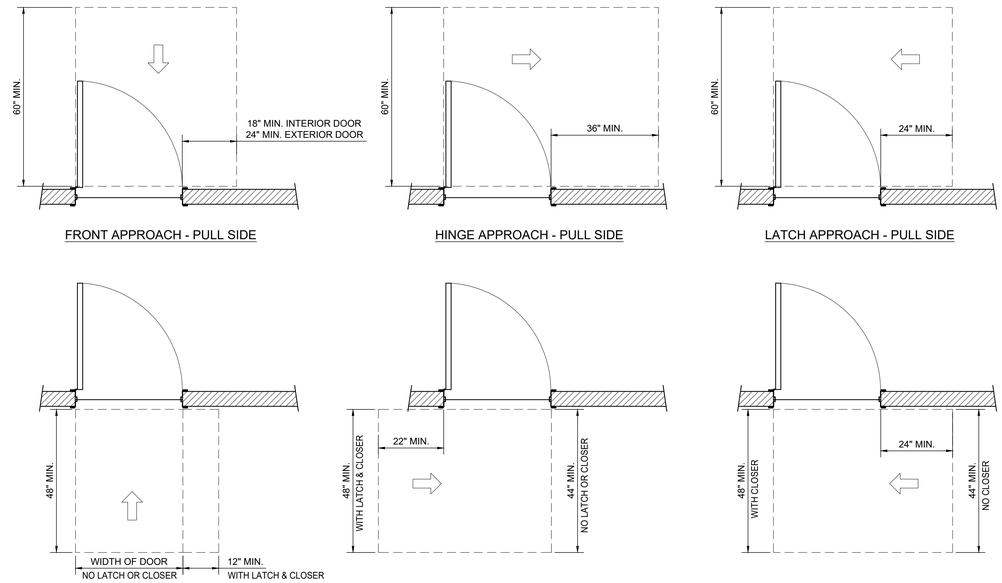

DOOR TYPES

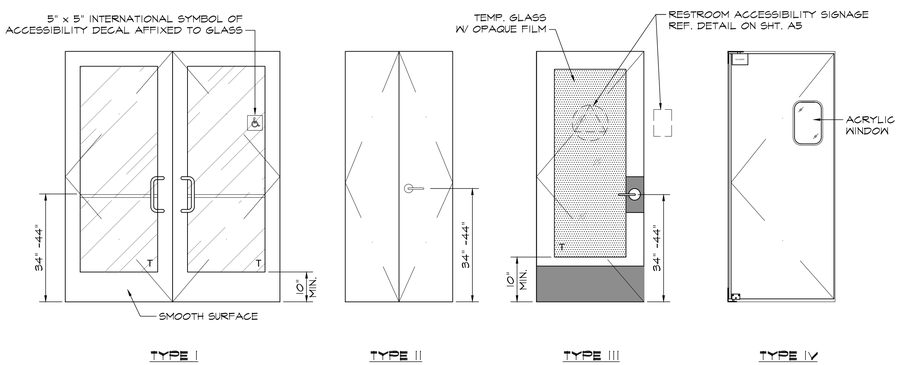

T = TEMPERED GLAZING

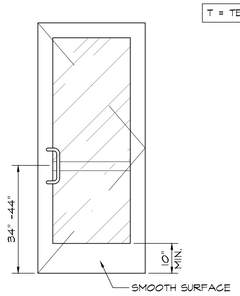

TYPE V

TACTILE EXIT SIGN

SIGN CHARACTER HEIGHT		
CHARACTER BASELINE HEIGHT ABOVE F.F.	HORIZONTAL VIEWING DISTANCE	MINIMUM CHARACTER HEIGHT
40" - 70" > 70"	< 72" > 72"	5/8" 5/8" + 1/8" PER 1' OVER 72"
70" - 120"	< 180" > 180"	2" 2" + 1/8" PER 1' OVER 180"
> 120"	< 21' > 21'	3" 3" + 1/8" PER 1' OVER 180"

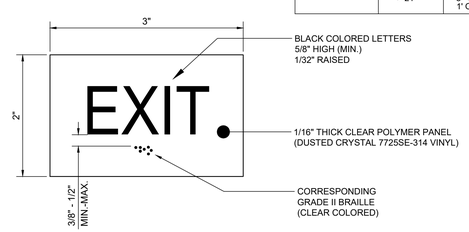

NOTES:

1. TACTILE EXIT SIGNS SHALL BE PROVIDED AT EACH GRADE LEVEL DESIGNATED EXIT DOOR.
2. EXIT SIGN SHALL BE MOUNTED ON THE INTERIOR SIDE OF STOREFRONT GLAZING @ 60" ABOVE FLOOR TO CENTER OF SIGN. USE CLEAR 'MACTAC' ADHESIVE FILM ON ENTIRE BACK OF PLAQUE.
3. SIGN SHALL BE MOUNTED SO THAT A PERSON MAY APPROACH WITHIN 3 INCHES OF SIGNAGE WITHOUT ENCOUNTERING PROTRUDING OBJECTS OR STANDING WITHIN THE SWING OF A DOOR.
4. CHARACTERS ON SIGN SHALL HAVE A HEIGHT TO WIDTH RATIO BETWEEN 3:5 & 1:1 & A STROKE RATIO WIDTH TO HEIGHT RATIO BETWEEN 1:5 & 1:10

CITY STAMP

THESE DRAWINGS AND SPECIFICATIONS ARE CONFIDENTIAL AND SHALL REMAIN THE SOLE PROPERTY OF BAKER ARCHITECTURE, WHICH IS THE OWNER OF COPYRIGHT IN THIS WORK. THEY SHALL NOT BE REPRODUCED IN WHOLE OR IN PART, SHARED WITH THIRD PARTIES OR USED IN ANY MANNER ON OTHER PROJECTS OR EXTENSIONS TO THIS PROJECT WITHOUT THE PRIOR WRITTEN CONSENT OF BAKER ARCHITECTURE.

LICENSED ARCHITECT
RAYMOND BAKER
No. C28547
REN. 6-19
STATE OF CALIFORNIA

BAKER [b a] architecture
4080 CENTRE ST, STE #203
SAN DIEGO, CA 92103 TEL:
(619) 281-5937
www.bakerarchitecture.com

REVISION SCHEDULE

REV	DATE	BY	DESCRIPTION
1	05.29.18	--	BLDG. DEPT. PLAN CHECK
2			
3			
4			
5			
6			

PROJECT # 17XXX

BURGER LOUNGE III LLC
FOUNTAINS AT ROSEVILLE
1198 ROSEVILLE PKWY. #135 - ROSEVILLE, CA 95678

DATE: 04/06/18

A7

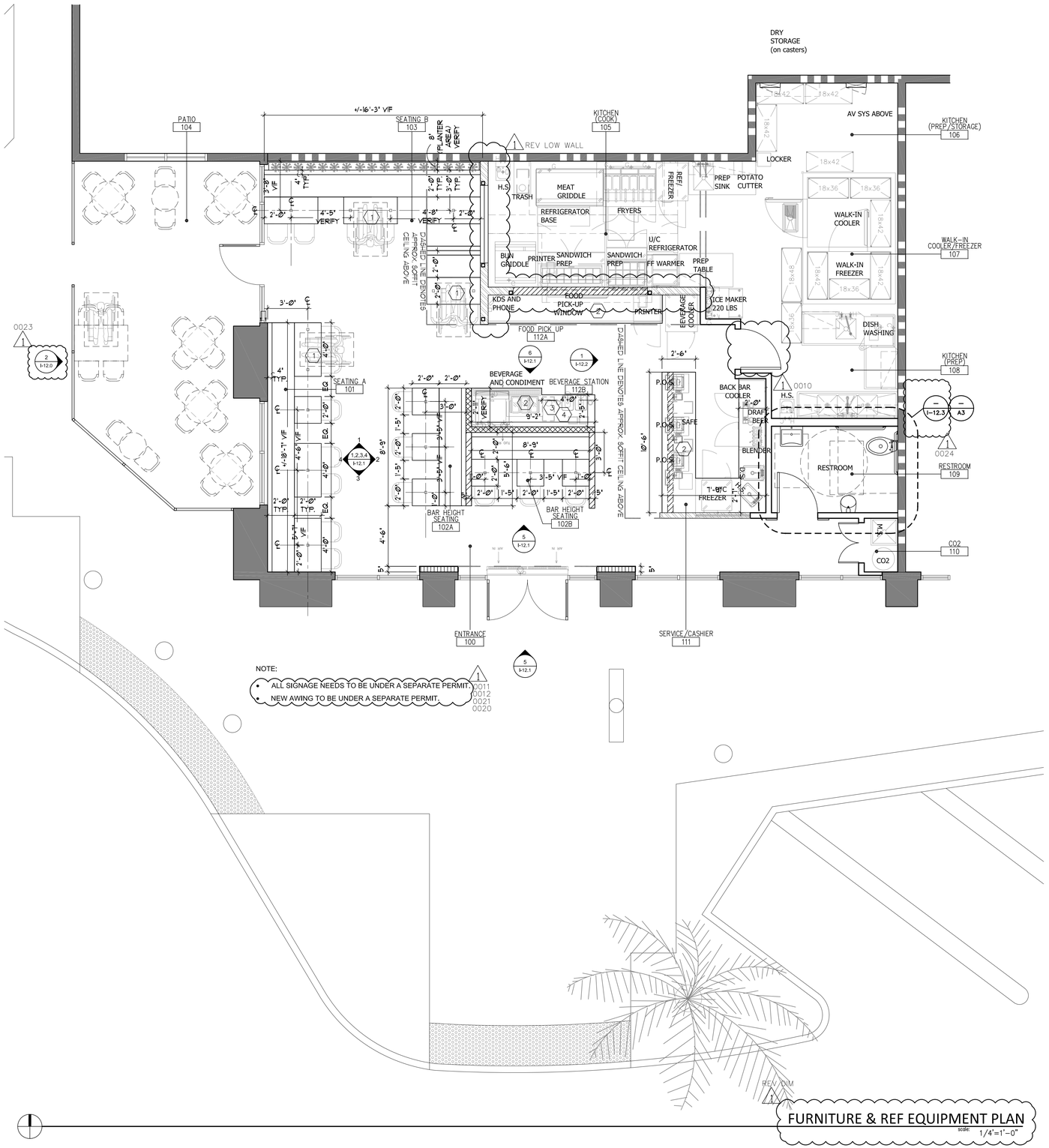

FURNITURE & REF EQUIPMENT PLAN

scale: 1/4"=1'-0"

NOTE:

- REFER TO A SHEETS FOR DIMENSIONS, PARTITION TYPES, CONSTRUCTION DETAILS & ADDITIONAL BUILDING CODE INFO.
- REFER TO MILLWORK DETAIL SHEET I-11.0 & I-11.1 AND ELEVATION SHEET I-12.0 & I-12.1.
- REFER TO FOOD SERVICE PLAN FOR EQUIPMENT SCHEDULE AND ADDITIONAL INFO.

PARTITION LEGEND:

(SEE A SHEET FOR CONST. DETAIL, WATER PROOF WALL LOCATIONS AND ADDITIONAL INFO.)

- EXISTING DEMISING PARTITION TO REMAIN.
- NEW FULL HEIGHT INTERIOR PARTITION.
- NEW INTERIOR PARTITION AT 8'-0" A.F.F.
- NEW PASS THROUGH WINDOW. SEE FS PLAN AND INTERIOR ELEVATION.
- NEW 3'-6"Hx5'-6"W INTERIOR GLAZING AT 4'-6" A.F.F. TO BE CENTERED AT KITCHEN COOK AREA #105 . SEE INTERIOR ELEVATION.
- NEW LOW HEIGHT INTERIOR PARTITION AT 3'-0" A.F.F. WITH 3'-0"HX4'-0"W CLEAR GLASS PARTITION ABOVE
- NEW LOW HEIGHT INTERIOR PARTITION APPLY WITH MILLWORK AT 4'-1" A.F.F. WITH 2'-7"H CUSTOM WOOD PANELING SCREEN ABOVE. SEE ELEVATION.
- NEW LOW HEIGHT INTERIOR PARTITION APPLY WITH MILLWORK AT 4'-1" A.F.F. WITH 10"H CUSTOM WOOD PANELING SCREEN ABOVE. SEE ELEVATION.
- NEW INTERIOR FUROUT PARTITION AT 12'-0". SEE ELEVATION

KEYNOTE:

1. HANDICAP SEATING TO PROVIDE WIDER TABLE SUPPORT TO MEET MIN. 27" CLEAR KNEE SPACE REQUIREMENT.
2. FOOD SERVICE COUNTER, PASS THOUGH WINDOW/COUNTER AND BEVERAGE STATION. REFER TO FOOD SERVICE PLAN FOR MORE INFO.
3. B.I.B STORAGE NEEDED BELOW BEVERAGE COUNTER. COORDINATE WITH OWNER.
4. BEVERAGE STATION NEEDS TO BE NOTCHED OUT AROUND FLOOR DRAIN PRIOR BEING PLACED ON SITE.

CITY APPROVAL STAMP:

STUDIO MYID
Melissa Young
CID# 6251 NCIDQ cert# 024408
2926 Upas St. San Diego, CA 92104
p: 760. 519. 4446
melissa@studioMYID.com

SIGNATURE:

This plan is a general arrangement of the interior space for the convenience of contractors and is made from available information. studioMYID assumes no responsibility for the accuracy of Interior measurements. Fabricators, Contractors and others utilizing these plans in connection with this job are responsible for securing their own measurements. Plumbing and Electrical information indicated on these plans are generally for interior/kitchen design and are intended as a reference only. studioMYID is not responsible for the engineering thereof, or for any plumbing or electrical fittings, work, and/or connections unless otherwise specifically provided for in the plans and specifications. studioMYID assumes no responsibility for work done by contractors or for any changes made necessary by local building or health department codes, ordinances, structural conditions, or by the substitution or changes in interior/kitchen design shown on the plan. These plans and designs contained herein are the property of studioMYID, and may not be reproduced, used, reviewed or examined by anyone, either all or in part, without first securing the written permission of studioMYID.

"THESE PLANS ARE FULLY PROTECTED UNDER THE COPYRIGHT LAWS OF THE UNITED STATES OF AMERICA".

FILE
DRAWN
REVIEWED

ISSUE	DATE	BY
FOR BACKGROUND	09.11.17	PSC,JA

PLAN CHECK	DATE	BY
1 PLAN CK #1	06.13.18	PSC,JA,MY

burger lounge III LLC
1198 Roseville Parkway
Suite #135
Roseville, CA 95661

PROJECT NO.
SCALE 1/4"=1'-0"
PRINTED
TITLE
FURNITURE PLAN

SHEET I-6.0

INTERIOR DESIGN · CONCEPTING · BRANDING · INTERIOR DESIGN · CONCEPTING · BRANDING · INTERIOR DESIGN · CONCEPTING · BRANDING · INTERIOR DESIGN · CONCEPTING · BRANDING · INTERIOR DESIGN · CONCEPTING · BRANDING

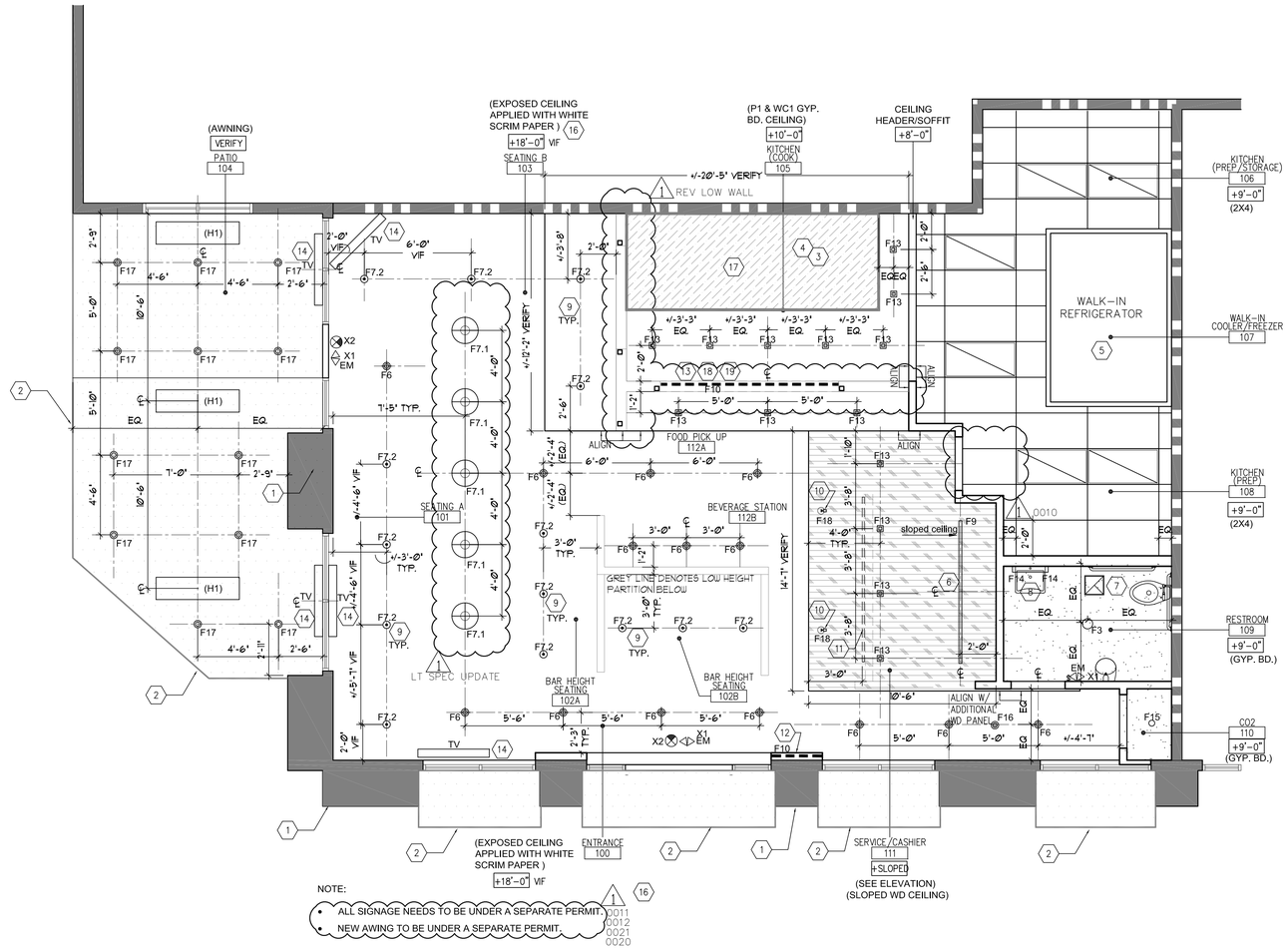

NOTE:
- ALL SIGNAGE NEEDS TO BE UNDER A SEPARATE PERMIT.
- NEW AWING TO BE UNDER A SEPARATE PERMIT.

1 0011 0012 0021 0020

1. G.C. TO TEST EXISTING EXTERIOR SIGNAGE J-BOXES REPAIR IF NEEDED FOR NEW EXTERIOR SIGNAGE BY OTHERS. REFER TO ELEVATION SHEET. CONTRACTOR TO COORDINATE AND VERIFY EXACT EXTERIOR SIGNAGE LOCATION WITH OWNER AND studio MYID.
   NOTE: A SEPARATE PERMIT IS REQUIRED FOR SIGNAGE 1 0012
2. EXTERIOR GRADE ROLL UP SHADE BY OTHERS. COORDINATE WITH OWNER & DESIGNER FOR STYLE AND DETAIL.
   NOTE: PROVIDE A SEPARATED PERMIT FOR AWING. 1 0011
3. EXHAUST HOOD ABOVE REFER TO KITCHEN AND MECH. PLANS.
   NOTE:
   PROVIDE NON-COMBUSTIBLE WALL CONSTRUCTION BEHIND THE TYPE I EXHAUST HOOD AREA (WHERE OCCURS). REFER TO MECHANICAL SHEET FOR DETAIL INFO.
4. LED LIGHT FIXTURE ABOVE HOOD AREA. REFER TO FOOD SERVICE PLAN FOR ADDITIONAL INFO.
5. NO GRID CEILING IN THIS AREA. WALK-IN REFRIGERATOR CEILING INCLUDED IN COOLER.
6. LIGHT FIXTURE (F9) FOR MENU BOARD TO BE MOUNTED 6" BELOW GYP. BD. CEILING AND CENTERED AT SERVICE COUNTER. COORDINATE WITH studio MYID. SEE BACK SERVICE COUNTER ELEVATION.
   NOTE: MENU BOARDS SHOULD NOT OBSTRUCT SPRINKLER DISCHARGE WHERE OCCURS.
7. PROVIDE EXHAUST AIR GRILL (FAN).
8. MIRROR WITH (2) BACK LIT LIGHT FIXTURE (F14) ON BOTH SIDES. MIRROR TO BE CENTERED OVER SINK.
9. LIGHT FIXTURES (F7.2) TO BE CENTERED AT EACH TABLE (U.N.O.).
10. SPOT LIGHT (F18) FOR "GRASS FED" SIGN AND "PICK UP" SIGNAGE. COORDINATE LOCATION WITH DESIGNER AND OWNER.
11. "GRASS FED" AND "PICK UP" SIGNAGE ON METAL TUBE ABOVE. SEE ELEVATION AND COORDINATE DETAIL WITH studio MYID.
12. PROVIDE TAPE LIGHT (F10) AND POWER ACCESS FOR BACK LIT GRAPHIC PANEL. SEE ELEVATION AND COORDINATE WITH DESIGNER.
13. PROVIDE LED TAPE LIGHT (F10) AT PASS THROUGH WINDOW SHELVING.
14. G.C. TO PROVIDE POWER DATA AND CABLE ACCESS FOR TV PER PLAN. COORDINATE WITH OWNER AND studio MYID & ARCHITECT FOR TV MOUNTING BRACKET DETAIL AND MOUNTING HEIGHT. PROVIDE "WHITE" OUTLET PLATE TO MATCH CEILING COLOR AT INTERIOR. COORDINATE WITH DESIGNER.
15. NOT USED.
16. APPLY WHITE SCRIM PAPER AT EXPOSED CEILING. ALL SEAMS TO HAVE CLEAN FOLDED EDGES FASTENED ONLY AT INSIDE OF JOISTS.
17. "ALL HOOD PENETRATIONS SHALL BE SEALED, OTHER WISE MADE GREASE TIGHT OR SHALL BE PERMITTED TO BE SEALED BY DEVICES THAT ARE LISTED FOR USE. DEVICES THAT REQUIRE PENETRATION OF THE HOOD SUCH AS PIPE AND CONDUIT PENETRATION FITTING AND FASTENERS SHALL BE LISTED IN ACCORDANCE WITH UL 1978 STANDARD FOR GREASE DUCTS. CMC 507,2,1, 508,2,3, AND 510.5.3, AND NFPA 96,5.1.3,5.1.4,5.1.11 AND 5.1.12." REFER MANUFACTURER'S DATA SHEET , FOOD SERVICE PLAN AND A SHEET FOR PENETRATION DETAIL AND ADDITIONAL INFO.
18. HEAT LAMP TO ALWAYS GO ON FRYER SIDE OF PASS THROUGH.
19. NO LED STRIP LIGHTS TO BE PLACED ON UPPER PASS THROUGH SHELF. INSTEAD PLACE TWO ROWS TO LED STRIP LIGHTS ON EACH LOWER SHELF.

REFLECTED CEILNG PLAN KEYNOTES

1. ALL LIGHTING (EXCEPT KITCHEN, SERVICE PICK UP COUNTER AREAS, STORAGE CLOSET AND CO2 CLOSET) TO BE ON DIMMERS (U.N.O.)
2. FIXTURES OF SIMILAR TYPE TO BE SWITCHED TOGETHER. U.N.O.
3. PROVIDE SEPARATE SWITCH FOR EACH FIXTURE TYPE. U.N.O.
4. PROVIDE SEPARATE SWITCHING FOR; EXTERIOR LIGHT SIGNAGE & INTERIOR SOFFIT BACK-LIGHT CIRCULAR LIGHT BOXES.
5. PROVIDE SEPARATE SWITCHING FOR BACK LIT PANEL AT SERVICE COUNTER.
6. PROVIDE SEPARATE SWITCHING FOR BACK LIT WALL SIGNAGE.
7. PROVIDE WARM TEMP LAMPING AT ALL FIXTURES.
8. PENDANT LIGHTS OVER TABLES TO BE CENTERED ON TABLE (U.N.O.). SEE FURNITURE PLAN FOR LOCATION OF TABLES. VERIFY ALL IN FIELD .
9. GENERAL CONTRACTOR TO TAKE SPECIAL CARE TO CREATE CLEAN OPENING WHEN CORING TECTUM PANEL FOR F13 LIGHT FIXTURES.

REFLECTED CEILING PLAN NOTES

EXISTING EXPOSED CEILING STRUCTURE APPLIED WITH WHITE SCRIM PAPER. SEE KEYNOTE #15.

NEW WD1 SOFFIT CEILING. SEE ELEVATION AND DETAIL. G.C. TO PROVIDE PLYWOOD BACKING FOR SOFFIT.

NEW SUSPENDED CEILING; 2'x4' VINYL FACED GYPSUM CORE LAY-IN PANELS (WHITE) WITH EXPOSED T-GRID (WHITE) BY ARMSTRONG OR EQUAL. CLASS 'A' FIRE RATING. (ICC-ES-ESR #1308) SEE A SHEET FOR CONST. DETAIL.

NEW GYP. BOARD CEILING/SOFFIT. CEILING HEIGHT PER PLAN. REFER TO A SHEET FOR DETAIL.

NEW PATIO AWNING WITH EXTERIOR GRADE ROLL UP SHADE BY OTHERS. SEE KEYNOTE #2

CEILING SOFFIT/HADER AT 8'-0" PER PLAN.

DENOTES EXISTING STRUCTURE COLUMN.

"EM" DENOTE EMERGENCY LIGHT FIXTURE

(TV) CEILING MOUNT TV PROVIDE POWER/DATA PER LOCATION. COORDINATE MOUNTING HEIGHT WITH OWNER AND DESIGNER

(H1) HEATER SPECIFICATION:
CEILING MOUNTED.
CALCANA HEATER
CALCANA #PH-40 HO
COORDINATE WITH OWNER AND Studio MYID
SEE A AND E SHEET FOR HEATER SPEC

HARDWIRED EXIT SIGN WITH BATTERY BACK UP. PER LIGHTING SCHEDULE.

LIGHT SWITCH

3-WAY LIGHT SWITCH

+9'-0" CEILING HEIGHT. SEE A SHEET.

4' W LINEAR DIFFUSER. REFER TO MECH. PLAN

4-WAY AIR SUPPLY

AIR RETURN

EXHAUST AIR GRILL (FAN)

NOTE:
ALL FINISHES SHALL COMPLY WITH CBC CHAPTER 8 AND CFC CHAPTER 8. REFER TO SHEET I-9.1 FOR ADDITIONAL INFO.

REFLECTED CEILING PLAN LEGEND

CITY APPROVAL STAMP:

REV 1 REFLECTED CEILING PLAN
scale: 1/4"=1'-0"

STUDIO MYID
Melissa Young
CID# 6251 NCIDQ Cert# 024408
2926 Upas St. San Diego, CA 92104
p: 760. 519. 4446
melissa@studioMYID.com

SIGNATURE:

1 00.36

This plan is a general arrangement of the interior space for the convenience of contractors and is made from available information. studioMYID assumes no responsibility for the accuracy of Interior measurements. Fabricators, Contractors and others utilizing these plans in connection with this job are responsible for securing their own measurements. Plumbing and Electrical information indicated on these plans are generally for interior/kitchen design and are intended as a reference only. studioMYID is not responsible for the engineering thereof, or for any plumbing or electrical fittings, work, and/or connections unless otherwise specifically provided for in the plans and specifications. studioMYID assumes no responsibility for work done by contractors or for any changes made necessary by local building or health department codes, ordinances, structural conditions, or by the substitution or changes in interior/kitchen design shown on the plan. These plans and designs contained herein are the property of studioMYID, and may not be reproduced, used, reviewed or examined by anyone, either all or in part, without first securing the written permission of studioMYID.

"THESE PLANS ARE FULLY PROTECTED UNDER THE COPYRIGHT LAWS OF THE UNITED STATES OF AMERICA".

FILE
DRAWN
REVIEWED

ISSUE	DATE	BY
FOR BACKGROUND	09.11.17	PSC,JA

PLAN CHECK	DATE	BY
1 PLAN CK #1	06.13.18	PSC,JA,MY

burger lounge III LLC
1198 Roseville Parkway
Suite #135
Roseville, CA 95661

1 0039 0041

PROJECT NO.
SCALE 1/4"=1'-0"
PRINTED
TITLE
REFLECTED CEILING PLAN

SHEET
I-7.0

• INTERIOR DESIGN • CONCEPTING • BRANDING • INTERIOR DESIGN • CONCEPTING • BRANDING • INTERIOR DESIGN • CONCEPTING • BRANDING • INTERIOR DESIGN • CONCEPTING • BRANDING • INTERIOR DESIGN • CONCEPTING • BRANDING •

BURGER LOUNGE, ROSEVILLE- LUMINAIRE SCHEDULE

SYMBOL	TYPE	QTY	DESCRIPTION	MFG	PART NUMBER	VOLT	LAMP TYPE AND WATTS	LAMP COLOR	LOCATION	CONTROL TYPE
	F2	**6**	N-SPEC'S NEW 2'X4' RECESSED EDGE LIT LED PANEL ALUMINUM FINISH AND WHITE LENS	NORA LIGHTING	#NPD-E22-30A	-	LED 38W	3000K or 3500K (VERIFY)	KITCHEN	
	F3	**1**	SLICE MODEL FM-41 11" DIA. dwellLED CEILING FLUSH MOUNTS	WAC LIGHTING	#FM-4111-30-BN (BRUSHED NICKEL)	-	31w. LED LUMENS 1635 DELIVERED LUMENS 940	3000K	RESTROOMS	MOTION SENSOR
UPDATE SPEC 1	F6	**13**	TUBE ARCHITECTURAL LED CEILING MOUNTS 4-7/8"X6-3/4" WITH BUILT IN REFLECTOR	WAC LIGHTING	DS-PD-05-N-F-30-WT COLOR: WHITE EXTENSION CABLE-VERIFY	-	LED 24W	3000K	AMBIENT LIGHTING	DIMMING
	F7.1	**5**	FETT PENDANT LIGHTING BY TECH LIGHTING 17.7"W (BOTTOM) x 18.3"H.	TECH LIGHTING	#700-___-FETP-___-LED (FINAL SPEC TO BE VERIFIED)		LED		DINING AREA	DIMMING
	F7.2	**15**	WIRO 2.0 PENDANT LIGHT FIXTURE BY WEVER & PUCRE 8.06"D.x4"H. X98" MAX. H MATERIAL :STEEL	YLIGHTING	#TO BE VERIFIED	-	INCAN. DESCENT UL LISTING 60 WATT	-	DINING SEATING	DIMMING
	F9	**1**	WINGRAIL/CEILING WALL ARM LED 107 VERTICAL SURFACE LIGHTING SINGLE RAIL (8FT), 6" CEILING ARM W/SMALL SQUARE CANOPY, CLEAR ANODIZED & CLEAR LENS	LUMIUM LIGHTING	#T12-RAM-LED-30K-M-8-U -10D-SC-MF-MA-4ACPF-6-WF	120V	AE POWER LED ZIPPER BOARD STD OUTPUT	30K (3000K)	MENU BOARD	
REV 1	F10 (TBD)	**1**	16' 24V DAMP LABEL HY-BRITE LED TAPE LIGHT ROLL	NORA LIGHTING	#NUTP5-W16LED930	-	-	3000K	DISPLAY / GRAPHIC WALL,PASS THROUGH PER PLAN	
		1	72" INTERCONNECTION CABLE		#NAHO-672	-	-	-		
		4	HO ALUMINUM CHANNEL		#NATHR-680	-	-	-		
		1	24V, 60W CLASS II DIMMABLE HARDWIRE MAGNETIC DRIVE		#NMTD-60/24D	24V	60W	-		
	F13	**12**	4" SQUARE LED DOWN LIGHT WITH HOUSING AND TRIM	NORA LIGHTING	#NHIC-4LMRAT (HOUSE) #NLCBC-45630WW (TRIM)	120V	LED 11W	3000K	AMBIENT LIGHTING	DIMMER
	F13A	**5**	F13A-WITH ADJUSTABLE HEAD & TRIM.							
	F14	**2**	SQUARE ALUMINUM EXTRUSION	DIODE LED	#DI-CPCHA-SQ48	-	-	-	RESTROOMS	MOTION SENSOR
		1	NON DIM POWER SUPPLY		#---	-	-	-		
ADD/REV 1	F15	**1**	STANDARD RECESSED DOWN LIGHT	NORA LIGHTING	#IMI-25--LC-V1	120V	-	250W	CO2 CLOSET	
	F16	**1**	SPOT LIGHT WITH ADJUSTABLE ISO HEAD (SATIN NICKEL)	TECH LIGHTING	#700-MP-ISO-830-30-18-S-LED	-	-	3000K	TO GRAPHIC WALL	TO BE ON OWN CIRCUIT W/F13A FIXTURES VERIFY
	F17	**12**	TUBE LIGHTING LED CEILING MOUNT	WAC LIGHTING	#PD-W2605-BK (VERIFY)	-	-	-	PATIO	DIMMING
	F18	**2**	SPOT LIGHT-LEDme QUICK CONNECT FIXTURE	WAC LIGHTING	CHARGE #QF-LED-102W-W-DB(VERIFY)	-	-	-	SERVICE COUNTER	DIMMING AND ON ITS OWN CIRCUIT
EM	X1	**3 (VERIFY)**	THERMOPLASTIC MR16 EMERGENCY BUG EYE	ISOLITE	#RL2LED-2-WH	-	MR16	-	KITCHEN DINING RESTROOM PER PLAN	EM CIRCUIT
	X2	**2 (VERIFY)**	COMMERCIAL EXIT SIGN UNIVERSAL LED EDGE LIT EXIT, EMERGENCY, GREEN, WALL MOUNT	PHILIPS	#ER44RLDU1G	120V	-	21.7W	PER PLAN	EM CIRCUIT
INV	**INV**	**1**	250W INVERTER 120V	ISOLITE	#IMI-25-LC-V1	120V		250W		

THE FOLLOWING REQUIREMENT FOR EMERGENCY LIGHTING SHALL BE MET. FURNITURE PLACEMENT SHALL BE CONSIDERED IN THE PLACEMENT OF EM LIGHTING AND SHALL MEET THE REQUIREMENTS BELOW WITHIN THE EXIT ACCESS, EXIT AND EXIT DISCHARGE.

- THE MEAN OF EGRESS, INCLUDING THE EXIT DISCHARGE, SHALL BE ILLUMINATED AT ALL TIMES THE SPACE SERVED BY THE MEANS OF EGRESS IN OCCUPIED. THE MEANS OF EGRESS ILLUMINATION LEVEL SHALL NOT BE LESS THEN 1-FOOT CANDLE AT THE WALKING SURFACE. CFC 1006.
- ILLUMINATED EXIT SIGNS AND EGRESS LIGHTING SHALL BE PLACED IN ACCORDANCE WITH CFC 1011. INDICATE ON REFLECTIVE CEILING AND ELECTRICAL SHEETS.

NOTES:
1. VERIFY CONTROL TYPES AND DIMMING BALLAST ARE COMPATIBLE.
2. DIMMING BALLAST AND CONTROL TYPES REFERENCED MAY REQUIRE ADDITIONAL WIRING FOR PROPER SWITCHING.
*** CONTRACTOR TO VERIFY QUANTITY OF ALL FIXTURE TYPES.
3. PENDANT LIGHT FIXTURES OVER TABLES TO BE CENTERED ON TABLE (U.N.O.). SEE FURNITURE PLAN FOR LOCATION OF TABLES. VERIFY ALL IN FIELD .

CITY APPROVAL STAMP:

STUDIO MYID
Melissa Young
CID# 6251 NCIDQ Cert# 024408
2926 Upas St. San Diego, CA 92104
p: 760. 519. 4446
melissa@studioMYID.com

SIGNATURE:

1 00.36

This plan is a general arrangement of the interior space for the convenience of contractors and is made from available information. studioMYID assumes no responsibility for the accuracy of Interior measurements. Fabricators, Contractors and others utilizing these plans in connection with this job are responsible for securing their own measurements. Plumbing and Electrical information indicated on these plans are generally for interior/kitchen design and are intended as a reference only. studioMYID is not responsible for the engineering thereof, or for any plumbing or electrical fittings, work, and/or connections unless otherwise specifically provided for in the plans and specifications. studioMYID assumes no responsibility for work done by contractors or for any changes made necessary by local building or health department codes, ordinances, structural conditions, or by the substitution or changes in interior/kitchen design shown on the plan. These plans and designs contained herein are the property of studioMYID, and may not be reproduced, used, reviewed or examined by anyone, either all or in part, without first securing the written permission of studioMYID.

"THESE PLANS ARE FULLY PROTECTED UNDER THE COPYRIGHT LAWS OF THE UNITED STATES OF AMERICA".

FILE
DRAWN
REVIEWED

ISSUE	DATE	BY
FOR BACKGROUND	09.11.17	PSC,JA

PLAN CHECK	DATE	BY
1 PLAN CK #1	06.13.18	PSC,JA,MY

burger lounge III LLC
1198 Roseville Parkway
Suite #135
Roseville, CA 95661

1 00.39 0041

PROJECT NO.
SCALE 1/4"=1'-0"
PRINTED
TITLE

REFLECTED CEILING LUMINAIRE SCHEDULE

SHEET **I-7.1**

• INTERIOR DESIGN • CONCEPTING • BRANDING • INTERIOR DESIGN • CONCEPTING • BRANDING • INTERIOR DESIGN • CONCEPTING • BRANDING • INTERIOR DESIGN • CONCEPTING • BRANDING • INTERIOR DESIGN • CONCEPTING • BRANDING • INTERIOR DESIGN • CONCEPTING • BRANDING

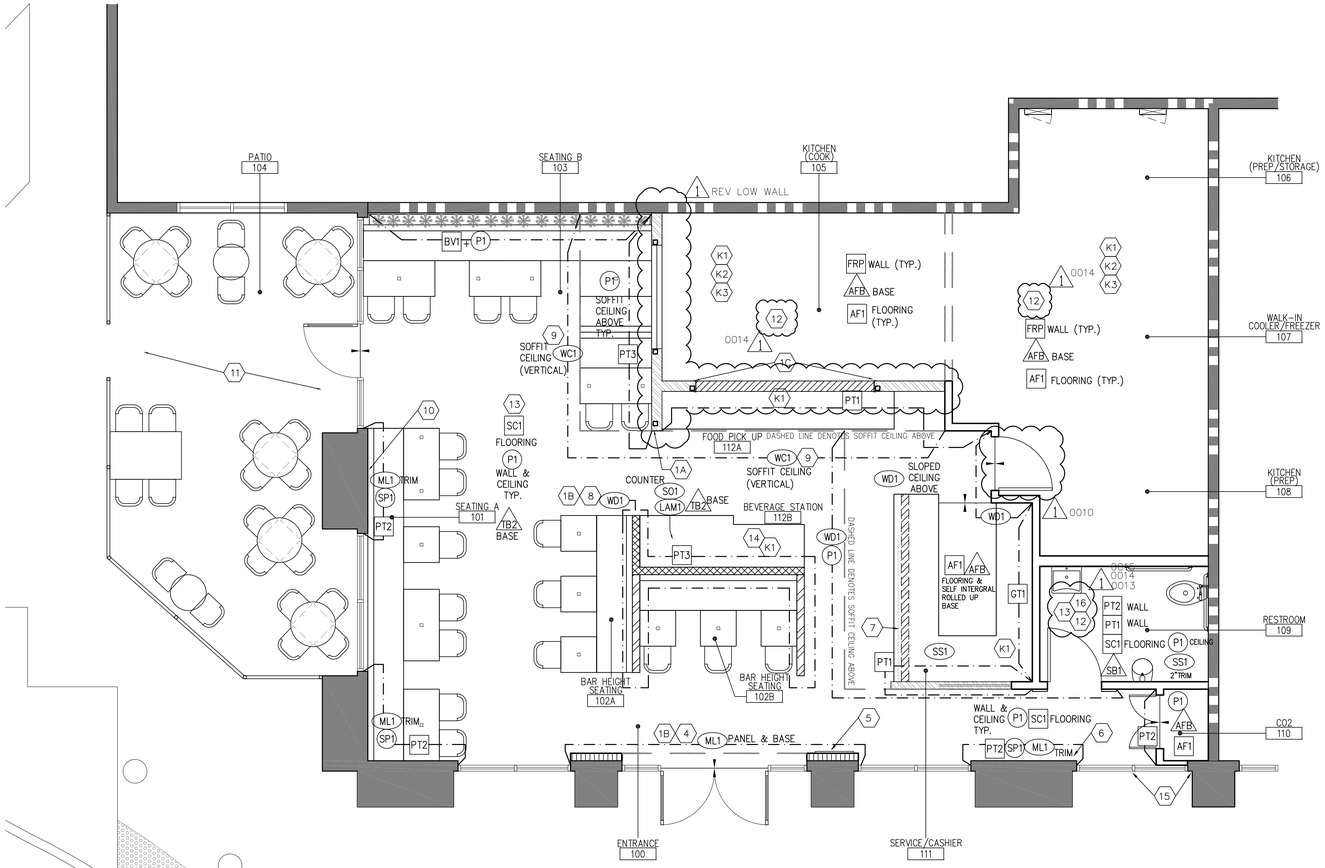

NOTE:
- ALL SIGNAGE NEEDS TO BE UNDER A SEPARATE PERMIT.
- NEW AWING TO BE UNDER A SEPARATE PERMIT.

NOTE:
ALL FINISHES SHALL COMPLY WITH CBC CHAPTER 8 AND CFC CHAPTER 8.
REFER TO FINISH LEGEND SHEET I-9.1 FOR MORE INFO.

REV/PLAN CK

FINISH PLAN
scale: 1/4"=1'-0"

LEGEND:
GRAY DASHED LINE DENOTES INTERIOR SOFFIT AND STRUCTURE ABOVE.

1. A. PROVIDE STAINLESS STEEL WALL END CAP AT KITCHEN PER PLAN. REFER TO FINISH PLAN & ELEVATIONS. VERIFY WITH studio MYID.
   B. PROVIDE TYPICAL 1" METAL CORNER TRANSITIONAL PROTECTION TRIM (ML1) OR (ML1) CAP AT EDGE OF WOOD WALL AND ML1 WALL PER PLAN AND ELEVATIONS. COORDINATE WITH studio MYID.
   C. PROVIDE STAINLESS STEEL WALL END CAP WITH 1" RETURN AT KITCHEN OPENING AREA PER PLAN. REFER TO FINISH PLAN & ELEVATIONS. VERIFY WITH studio MYID.
2. NOT USED.
3. NOT USED.
4. PROVIDE CLEAR COAT FINISH FOR ALL HOT ROLLED METAL (ML1) TYP.
5. GRAPHIC IMAGE WITH PLASTIC LAMINATE BACK PANEL DISPLAY. COORDINATE DETAIL WITH studio MYID AND OWNER.
6. PROVIDE (3) GRAPHIC PANELS WITH SS STAND OFF. COORDINATE GRAPHIC IMAGE AND DETAIL WITH studio MYID.
7. SIGNAGE COMPANY TO PROVIDE SUSPENDED "GRASS FEED" AND "PICK UP" SIGNS. COORDINATE WITH studio MYID FOR IMAGE SIZE AND ADDITIONAL INFO.
8. (ML1) LOW WALL WITH MUTI-COLORED WD PANELING SCREEN. SEE ELEVATION FOR MORE INFO.
9. CUSTOM (WC1) WALL COVERING. COORDINATE WITH studio MYID.
10. WALL TO HAVE INDENTED LETTERS ' BRINGING REAL FOOD TO THE PEOPLE 'COORDINATE WITH studio MYID FOR DETAIL.
11. G.C. TO SAND BLAST AND SEAL PATIO FLOOR TO LIKE NEW CONDITIONS
12. REFER TO A SHEET FOR WATER PROOF MEMBRANE WALL AND FLOORING LOCATION AND DETAILS
13. PROVIDE (SV1) FOR DINING AND RESTROOM FLOORING PER PLAN. NOTE: FOR NEW CONCRETE FLOORS (SC1), G.C. TO SEAL WITH A CLEAR PENETRATING URETHANE CONCRETE SEALER. FOR EXISTING CONCRETE FLOORS, G.C. TO GRIND, SAND & SEAL WITH A CLEAR PENETRATING URETHANE CONCRETE SEALER.
14. AT BEVERAGE STATION, THE EPOXY COATING WILL NEED TO BE 3" FROM THE COUNTER FACE AT SELF SERVICE COUNTER AND BEVERAGE STATION. AROUND THE COUNTER AND EPOXY AREA, THE CONCRETE WILL NEED TO BE SAW CUT DOWN 1/4" SO THAT THE POLYCRETE BASE CAN FLOAT UP TO THE EDGE.
15. PROVIDE GRAPHIC FILM AT GLAZING PANEL PER PLAN AND ELEVATION. COORDINATE WITH studio MYID FOR DESIGN DETAIL.
16. RESTROOM TO PROVIDE WATER RESISTANT GYPSUM BOARD BACKING BOARDAND BASE FOR TILES. REFER TO A SHEET FOR DETAIL.

KITCHEN & FOOD SERVICE AREA NOTES;
- K1 REFER TO FOOD SERVICE PLAN FOR ADDITIONAL FINISH INFO. AT KITCHEN , PASS THROUGH, SERVICE COUNTER AREA.
- K2 APPLY STAINLESS FLASHING PANEL IN DISH WASHING AREA PROVIDED BY KEC (VERIFY).
- K3 PROVIDE FIBER GLASS PANEL AT ICE MAKER AREA. REFER TO FOOD SERVICE PLAN.
- K4 BEER KEG NEEDS TO TIE INTO A FLOOR DRAIN

FINISH PLAN KEYNOTES

1. NEW DRYWALL SURFACES SHALL RECEIVE #1100 HI BUILD PRIMER SEALER BY VISTA PAINT OR EQUAL.
2. PRIMER FOR ALL DRYWALL SURFACES SHALL BE #4000 UNIPRIME TINTED ACRYLIC PRIMER BY VISTA PAINT OR EQUAL.
3. PAINTED SURFACES SHALL RECEIVE A MINIMUM OF (2) COATS OF PAINT. ADDITIONAL COATS MAY BE REQUIRED TO ACHIEVE SATURATION OF SELECTED COLORS. SEE LEGEND.
4. EXISTING FLOORING AREAS THAT ARE TO REMAIN ARE TO BE CLEANED, PATCHED AND REPAIRED TO LIKE NEW CONDITION . NOTIFY DESIGNER WHEN DEMO IS COMPLETE FOR ONSITE INSPECTION AND APPROVAL. SEE FINISH PLAN FOR AREAS TO REMAIN.
5. ALL DRYWALL SOFFIT CONDITIONS TO RECEIVE (P1), UNLESS NOTED OTHERWISE.
6. UNLESS NOTED OTHERWISE, ALL WALL SURFACES SHALL RECEIVE PAINT (P1) THROUGHOUT, SEE LEGEND.
7. ALL PARTITIONS TO BE (P1) U.N.O.
8. REFER TO ELEVATIONS FOR FURTHER DETAIL & LOCATION OF FINISHES.
9. PROVIDE DESIGNER WITH ALL SEAMING & FINISHES PLANS FOR APPROVAL PRIOR TO INSTALLATION.
10. A 5" HIGH SELF-COVING SLIMFOOT BASE IS REQUIRED AT ALL COUNTERS, U.N.O.
11. PAINT FINISH TO BE EGG-SHELL U.N.O.
12. ALL FLOOR AND GROUT TO BE SEALED PER MANUFACTURES RECOMMENDATIONS.
13. USE SCHLUTER OR EQUAL TRANSITION PIECES AT ALL EXPOSED TILE EDGES.
14. ALL TILE MUST BE SEALED WITH HIGH QUALITY SEALER.
15. FOR ANY NEW CONCRETE SLAB POUR, G.C. TO PROVIDE VAPOR BARRIER AT ALL SAW CUT PENETRATIONS.
16. TOILET ROOM FLOORS SHALL HAVE A SMOOTH, HARD NON-ABSORBENT SURFACE SUCH AS PORTLAND CEMENT, CERAMIC TILE OR OTHER APPROVED MATERIAL THAT EXTENDS UPWARD ONTO THE WALL AT LEAST 4" (1210.2.1).
17. ALL RESTROOM FLOORING MATERIALS TO BE SLIP RESISTANT (TYP.)
18. WATERPROOF MEMBRANE IS REQUIRED IN ALL WET AREAS (TYP.)
19. WALL WITHIN 18 INCHES OF THE COOKING SURFACES MUST BE FLASHED WITH STAINLESS STEEL, CERAMIC TILE OR EQUIVALENT FROM HOOD TO FLOOR. SEE FOOD SERVICE PLAN FOR EQUIPMENT LAYOUT.
20. ALL PASS THROUGH TO BOH TO HAVE 14" H ACRYLIC PANEL MOUNTED ON POST (U.N.O) SPEC: ACRYLIC PANEL, POST AND GRAPHIC?

FINISH PLAN NOTES

Fire Resistance

Material	Flame Spread Index (10 min)	Flame Spread Index (30 min)	Smoke Developed Value (10 min)	NFPA Class*	UBC Class**
Ipe	0	5	3	A	1

WD2

SHADE VARIATION

V1 UNIFORM APPEARANCE — Differences among pieces from the same production run are minimal.

V2 SLIGHT VARIATION — Closely distinguishable differences in tonkness and/or pattern with similar colors.

V3 MODERATE VARIATION — While the colors present on a single piece of tile will be indicative of the colors on the other pieces in the other tiles, the amount of colors on each piece will vary significantly

PACKAGING

SIZES	METRIC (CM)	THICKNESS (MM)	PIECES/PERBOX	SQ.FT PER BOX	WEIGHT PER BOX	BOXES PER PALLET	WEIGHT/PERPALLET
8"x36" ◆	15x60	10 mm	8	12	52.8	44	2,323

ALL OTHER SIZES WILL BE PACKAGED AS CHOSENED.
PLEASE CONTACT FLORIM USA FOR SPECIAL ORDERS AT 877 FLORIMT (877 356 7468) FOR PACKAGING INFORMATION.

◆ MINIMUM GROUT SIZE RECOMMENDED is 3 MM (1/8") APPROX. 3/16") IF REQUESTED TILE PLACEMENT, WE RECOMMEND USING A 33% OFFSET. IF SPECIFIED BRICK PATTERN WITH 1 1/2 PATTERN MINIMUM 6"H, A LARGER GROUT IS RECOMMENDED TO HIDE IMPERFECTIONS OF INSTALLATION (MINIMUM 1/4").

TECHNICAL SPECIFICATIONS - GLAZED PORCELAIN

Surface Abrasion	PEI	IV	ASTM C1027
Water Absorption		≤ 0.5%	ASTM C373
Chemical Resistance		NOT AFFECTED	ASTM 650
Dynamic Coefficient of Friction		≥ 0.42 *	ANSI 137.1
Stain Resistance		NOT AFFECTED	ASTM C1378
Breaking Strength		≥ 400	ASTM C648
Resistance to Freeze		RESISTANT	ASTM C1026
Scratch Hardness		≥ 7	MOHS

ALL FLORIM USA PRODUCTS MEET OR EXCEED ALL STANDARDS IN ANSI A137.1.
* DUE TO THE INHERENT NATURE OF FIRED PORCELAIN TILE, IT IS IMPORTANT TO NOTE THAT THE COEFFICIENT OF FRICTION MAY VARY WITHIN AND BETWEEN PRODUCT RUNS.

PT2

CITY APPROVAL STAMP:

INTERIOR MATERIALS FIRE RATING

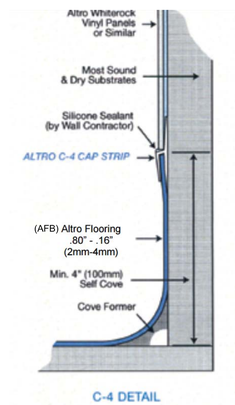

ALTRO SLIP RESISTANT BASE (AFB) DETAIL @ KITCHEN AREA

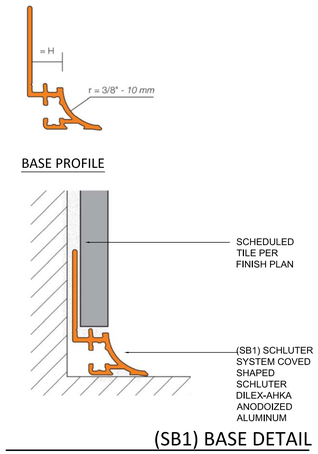

(SB1) BASE DETAIL

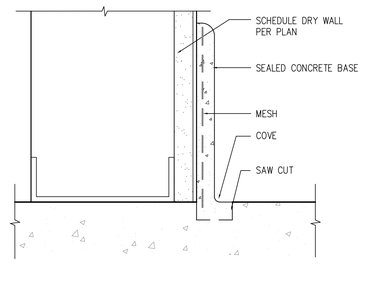

CONCRETE BASE DETAIL
scale: HALF

STUDIO MYID
Melissa Young
CID# 6251 NCIDQ Cert# 024408
2926 Upas St. San Diego, CA 92104
p: 760. 519. 4446
melissa@studioMYID.com

SIGNATURE:

This plan is a general arrangement of the interior space for the convenience of contractors and is made from available information. studioMYID assumes no responsibility for the accuracy of Interior measurements. Fabricators, Contractors and others utilizing these plans in connection with this job are responsible for securing their own measurements. Plumbing and Electrical information indicated on these plans are generally for interior/kitchen design and are intended as a reference only. studioMYID is not responsible for the engineering thereof, or for any plumbing or electrical fittings, work, and/or connections unless otherwise specifically provided for in the plans and specifications. studioMYID assumes no responsibility for work done by contractors or for any changes made necessary by local building or health department codes, ordinances, structural conditions, or by the substitution or changes in interior/kitchen design shown on the plan. These plans and designs contained herein are the property of studioMYID, and may not be reproduced, used, reviewed or examined by anyone, either all or in part, without first securing the written permission of studioMYID.

"THESE PLANS ARE FULLY PROTECTED UNDER THE COPYRIGHT LAWS OF THE UNITED STATES OF AMERICA".

FILE
DRAWN
REVIEWED

ISSUE	DATE	BY
FOR BACKGROUND	09.11.17	PSC,JA

PLAN CHECK	DATE	BY
PLAN CK #1	06.13.18	PSC,JA,MY

burger lounge III LLC
(1198) Roseville Parkway
Suite #135
Roseville, CA 95661

PROJECT NO.
SCALE 1/4"=1'-0"
PRINTED
TITLE
FINISH PLAN

SHEET I-9.0

• INTERIOR DESIGN • CONCEPTING • BRANDING • INTERIOR DESIGN • CONCEPTING • BRANDING • INTERIOR DESIGN • CONCEPTING • BRANDING • INTERIOR DESIGN • CONCEPTING • BRANDING •

CALIFORNIA BUILDING CODE (2016 EDITION)

CHAPTER 8. INTERIOR FINISHES

SECTION 803 WALL AND CEILING FINISHES

803.1 GENERAL
INTERIOR WALL AND CEILING FINISH MATERIALS SHALL BE CLASSIFIED FOR FIRE PERFORMANCE AND SMOKE DEVELOPMENT IN ACCORDANCE WITH SECTION 803.1.1 OR 803.1.2 EXCEPT AS SHOWN IN SECTIONS 803.2 THROUGH 803.13. MATERIALS TESTED IN ACCORDANCE WITH SECTION 803.1.2 SHALL NOT REQUIRED TO BE TESTED IN ACCORDANCE WITH SECTION 803.1.1.

803.1.1 INTERIOR WALL AND CEILING FINISH MATERIALS.
INTERIOR WALL AND CEILING FINISH MATERIALS SHALL BE CLASSIFIED IN ACCORDANCE WITH ASTM E84 OR UL 723. SUCH INTERIOR FINISH MATERIALS SHALL BE GROUPED IN THE FOLLOWING CLASSES IN ACCORDANCE WITH THEIR FLAME SPREAD AND SMOKE-DEVELOPED INDEXES.

CLASS A = FLAME SPREAD INDEX 0-25; SMOKE-DEVELOPED INDEX 0-450

CLASS B = FLAME SPREAD INDEX 26-75; SMOKE-DEVELOPED INDEX 0-450

CLASS C = FLAME SPREAD INDEX 76-200; SMOKE-DEVELOPED INDEX 0-450

EXCEPTION: MATERIALS TESTED IN ACCORDANCE WITH SECTION 803.1.2.

803.1.2 ROOM CORNER TEST FOR INTERIOR WALL OR CEILING FINISH MATERIALS.
INTERIOR WALL OR CEILING FINISH MATERIALS SHALL BE PERMITTED TO BE TESTED IN ACCORDANCE WITH NFPA 286. INTERIOR WALL OR CEILING FINISH MATERIALS TESTED IN ACCORDANCE WITH NFPA 286 SHALL COMPLY WITH SECTION 803.1.2.1.

803.1.2.1 ACCEPTANCE CRITERIA FOR NFPA 286.
THE INTERIOR FINISH SHALL COMPLY WITH THE FOLLOWING:

1. DURING THE 40 kW EXPOSURE, FLAMES SHALL NOT SPREAD TO THE CEILING.
2. THE FLAME SHALL NOT SPREAD TO THE OUTER EXTREMITY OF THE SAMPLE ON ANY WALL OR CEILING.
3. FLASHOVER, AS DEFINED IN NFPA 286, SHALL NOT OCCUR.
4. THE PEAK HEAT RELEASE RATE THROUGHOUT THE TEST SHALL NOT EXCEED 800kW.
5. THE TOTAL SMOKE RELEASED THROUGHOUT THE TEST SHALL NOT EXCEED 1,000m2.

803.1.3 ROOM CORNER TEST FOR TEXTILE WALL COVERINGS AND EXPANDED VINYL WALL COVERINGS.
TEXTILE WALL COVERINGS AND EXPANDED VINYL WALL COVERINGS SHALL MEET THE CRITERIA OF SECTION 803,1,3,1 WHEN TESTED IN THE MANNER INTENDED FOR USE IN ACCORDANCE WITH THE METHOD B PROTOCOL OF NFPA 265 USING THE PRODUCT-MOUNTING SYSTEM. INCLUDING ADHESIVE.

803.1.3.1 ACCEPTANCE CRITERIA FOR NFPA 265.
THE INTERIOR FINISH SHALL COMPLY WITH THE FOLLOWING:

1. DURING THE 40 KW EXPOSURE, FLAMES SHALL NOT SPREAD TO THE CEILING.
2. THE FLAME SHALL NOT SPREAD TO THE OUTER EXTREMITY OF THE SAMPLE ON THE 8-FOOT BY 12-FOOT (203 BY 305 mm) WALLS.
3. FLASHOVER, AS DEFINED IN NFPA 265, SHALL NOT OCCUR.
4. THE TOTAL SMOKE RELEASED THROUGHOUT THE TEST SHALL NOT EXCEED 1,000M².

803.1.4 ACCEPTANCE CRITERIA FOR TEXTILE AND EXPANDED VINYL WALL OR CEILING COVERINGS TESTED TO ASTM E84 OR UL723.
TEXTILE WALL AND CEILING COVERINGS AND EXPANDED VINYL WALL AND CEILING COVERINGS SHALL HAVE A CLASS A FLAME SPREAD INDEX IN ACCORDANCE WITH ASTM E84 OR UL 723 AND BE PROTECTED BY AN AUTOMATIC SPRINKLER SYSTEM INSTALLED IN ACCORDANCE WITH SECTION 903.1.1 OR 903.3.1.2. TEST SPECIMEN PREPARATION ADN MOUNTING SHALL BE IN ACCORDANCE WITH ASTM E2404.

- INTERIOR FLOOR FINISH AND FLOOR COVERING MATERIALS SHALL COMPLY WITH SECTION 804. MATERIAL, OTHER THAN FOAM PLASTIC, USED AS INTERIOR TRIM IN NEW AND EXISTING BUILDINGS SHALL HAVE A MINIMUM CLASS C FLAME SPREAD AND SMOKE DEVELOPED INDICES WHEN TESTED IN ACCORDANCE WITH ASTM E84 OR UL723

TABLE 803.9
INTERIOR WALL AND CEILING FINISH REQUIRMENTS BY OCCUPANCY [k]

GROUP	SPRINKLERED[i]			NON SPRINKLERED		
	Interior exit stairways, interior exit ramp and exit passageways [a,b]	Corridors and enclosure for exit access stairways and exit access ramps	Rooms and enclosed spaces[c]	Interior exit stairways, interior exit ramp and exit passageways [a,b]	Corridors and enclosure for exit access stairways and exit access ramps	Rooms and enclosed spaces[c]
A-1 & A-2	B	B	C	A	A[d]	B[e]
A-3[f], A-4, A-5	B	B	C	A	A[d]	C
B,E,M, R-1	B	C	C	A	B	C
R-4	B	C	C	A	B	B
F	C	C	C	B	C	C
H,L	B	B	C[g]	A	A	B
I-2, I-2.1	B	B	B[h,i]	A	A	B
I-3	A	A[j]	B	NP	NP	NP
I-4	B	B	B[h,i]	A	A	B
R-2	C	C	C	B	B	C
R-2.1	B	C	C	A	B	B
R-3[m], R-3.1	C	C	C	C	C	C
S	C	C	C	B	B	C
U	No restrictions			No restrictions		

for si: 1 inch=25.4mm 1 square foot=0.0929m²
np= not permitted (sfm)

a. Class C interior finish materials shall be permitted for wainscoting or paneling of not more than 1,000 square feet of applied surface area in the grade lobby where applied directly to a non combustible base or over furring stripe applied to a noncombustible base and fire blocked as required by Section 803.13.1.
b. In other than Group I-3 occupancies in buildings less then three stories above grade plane. Class B interior finish for non-sprinklered buildings and Class C interior finish for sprinkler buildings shall be permitted in interior exit stairways and ramps.
c. Requirements for room and enclosed spaces shall be based upon spaces enclosed by partitions. where a fire resistance rating is required for structural elements, the enclosing partitions shall extend from the floor to the ceiling. partitions that do not comply with this shall be considered enclosing spaces and the room or spaces on both sides shall be considered one. in determining the applicable requirements for room and enclosed spaces the specific occupancy thereof shall be the goveri=ning factor regardless of the group classification of the building or structure.
d. lobby areas in group A-1,A-2 and A-3 occupancies shall not be less than Class B materials.
e. Class C interior finish materials shall be permitted in places of assembly with an occupant load of 300 persons or less.
f. for places of religious worship, wood sued for ornamental purposes, trusses, paneling or chance furnishing shall be permitted.
g. Class B material is required where the building exceeds two stories.
h. Class C interior finish materials shall be permitted administrative spaces.
i. Class C interior finish materials shall be permitted in rooms with a capacity of four person or less.
j. Class B materials shall be permitted as wainscoting extending not more than 48 inches above the finished floor in corridors and exit access stairways and ramps.
k. Finish materials as provided for in other sections of this code.
l. Applies when protected by an automatic sprinkler system installed in accordance with section 903.3.3 or 903.3.1.2.
m. Where Group R-3 and R-4 occupancies are permitted in section 903.2.8 to be protected by an automatic sprinkler system installed in accordance with section 903.3.1.3 the requirements for a non-sprinklered building shall apply.

OCCUPANCY -GROUP A

PLAN CK #1 RE-SUBMITTAL,PRICING& PLAN UPDATE @ (06.13.18)

SYMBOL	MATERIAL TYPE	DESCRIPTION	DISTRIBUTOR/ CONTACT	SUPPLIED	INSTALLED	LOCATION	REMARKS/ NOTES
FLOOR FINISHES:							
AF1	ALTRO SLIP RESISTANT FLOORING	ALTRO STRONGHOLD 30-TUNDRA-K30500	DAN WALLER TEL-949.445.957 HTTP://WWW.ALTROFLOORS.COM/ ALTRO-STRONGHOLD#SB	G.C	G.C	KITCHEN AND STORAGE FLOORING	G.C. TO SUBMIT SAMPLES FOR APPROVAL
SC1	SEALED CONCRETE	STAINED CONCRETE FLOOR WITH HEAVY SEAL		G.C	G.C	DINING AREA & RESTROOM	G.C. TO GRIND, SAND & SEAL WITH CLEAR EPOXY SEALER. PROVIDE HEAVY DUTY CONCRETE SEALER, PROVIDE SAMPLE AND COORDINATE WITH studio MYID
WALL TILE & BASE:		NOTE: ALL TILE MUST BE SEALED WITH HIGH QUALITY SEALER.					
GT1	GLASS TILE	DAI TILE COLOR/SIZE-WAVE VIBRANT SOLIDS 2"X12" LIME GLOW #CW33	DAI TILE	G.C	G.C	ACCENT GLASS WALLTILES	
BV1	BRICK VENEER	REAL USED BRICK: WIRE CUT TO MATCH DESIGNER'S SAMPLE	THOMPSON BUILDING PRODUCTS SCOTT OBRIEN 415.987.2585	G.C	G.C	ACCENT WALL WITH LOGO AND WALL PER PLAN	GREY MORTAR
PT1	PORCELAIN TILE	SUBWAY - GLAZED CERAMIC COLOR: WHITE FINISH: GLOSSY 4"X12"	ARIZONA TILE EVIE AVINANTE 858.566.6195 X2032 EAVINANTE@ARIZONATILE.COM	G.C	G.C	SECONDARY WALL FIELD PATTERN/LOCATION-PER ELEVATION	
PT2	PORCELAIN TILE	SERIES: PISA COLOR: COCOA SIZE: 6"x36"	SPEC CERAMICS INC. BEN FRIESEN (GC THOMAS) 619-518-3011 ben@gcthomas.com	G.C	G.C	PRIMARY WALLS FIELD PER ELEVATION	WWW.SPECCERAMICS.COM
PT3	PORCELAIN TILE	BLENDS NERO #L1510.10207 SAM SIZE: (ORIGINAL SIZE) 39.4"x118.1" CUT PER PLAN	CROSSVILLE HEATHER DUNCAN 858.431.9522 HDUNCAN@LONGUST.COM	G.C	G.C	SERVICE CASHIER COUNTER (TBD), LOW WALL BEHIND PLANTER.	CONTRACTOR TO PRE-CUT TILE PER PLAN AND ELEVATION
G1	GROUT	CUSTON BUILDING PRODUCTS #45 SUMMERWHEAT NON-SANDED	INTERCERAMIC INC.	G.C	G.C	ALL PT2 PORCELAIN TILE	
G2	GROUT	STANDARD #001 WHITE NON-SANDED EPOXY GROUT	INTERCERAMIC INC.	G.C	G.C	ALL PT1 PORCELAIN TILE (WHITE)	GT1, PT1
G3	GROUT	CUSTOM BUILDING PRODUCTS #165 DELOREAN GRAY NON-SANDED	INTERCERAMIC INC.	G.C	G.C	ALL FT1 PORCELAIN FLOOR TILE	
TB1	TILE BASE	BLENDS NERO #L1510.10207 SAM SIZE: (ORIGINAL SIZE) 39.4"x118.1" CUT TO 19.7"x118.1"	TONY ROBSON CROSSVILLE CELL 619.602.3462	G.C	G.C	19.7" H BASE AT PARTITION BELOW	CONTRACTOR TO PRE-CUT TILE PER PLAN AND ELEVATION
TB2	TILE BASE	5" BULLNOSE TO MATCH INTERCERAMIC CONCRETE PORCELAIN TILE COLOR: DARK GREY SIZE: 5"X24"	DANELLE MORGAN LONGUST DISTRIBUTING 858-431-9522	G.C	G.C	ADD SCHLUTER BASE (SB1) FOR ALL WET AREA	
TB3	TILE BASE	DAL-TILE 5 $\frac{1}{2}$"x7 $\frac{1}{2}$" FLAT TOP COVE BASE. COLOR: PEARL WHITE. QH63	DAL-TILE	G.C	G.C	SERVICE AREA	
AFB	ALTRO SLIP RESISTANT FLOORING BASE	ALTRO STRONGHOLD 30-TUNDRA-K30500	DAN WALLER TEL-949.445.957 HTTP://WWW.ALTROFLOORS.COM/ ALTRO-STRONGHOLD#SB	G.C	G.C	KITCHEN AREA, RESTROOMS, SERVICE COUNTER AREAS AND STORAGE	PROVIDE SELF INTEGRAL ALTRO SLIP ROLL UP BASE
SB1	STAINLESS STEEL SCHLUTER BASE	SCHLUTER COVED BASE AT RESTROOM SCHLUTER SYSTEM SCHLUTER DILEX-AHKA	SCHLUTER CONTACT: TBD	G.C	G.C	RESTROOM AND DINING AREA PER PLAN	
PAINTS:							
CP1	CLEAR COAT	106,07 WOOD CLASSICS® WATERBORNE POLYURETHANE VARNISH FINISH: A68F00090 SATIN	SHERWIN WILLIAMS	G.C	G.C	EXTERIOR (WD2) WOOD PANELING (WHERE OCCURS)	
P1	PAINT (WHITE)	COLOR TO MATCH FRAZEE WHITE SHADOW #181, EGGSHELL FINISH	BENJAMIN MOORE	G.C	G.C	OVERALL INTERIOR WALLS AND CEILING (U.N.O.)	
P2	PAINT (WHITE)	COLOR TO MATCH FRAZEE WHITE SHADOW #181, SEMI-GLOSS FINISH	BENJAMIN MOORE	G.C	G.C	MULTI COLORED CEILING PANEL OR SCREEN PER PLAN PER PLAN	
P3	PAINT (DARK GRAY)	COLOR TO MATCH SHERWIN WILLIAMS IRON ORE #SW7069	BENJAMIN MOORE	G.C	G.C	SOFFIT CEILING AND PANEL PER PLAN	*RESTROOM DOOR AND FRAME TO RECEIVE (P3)
P4	PAINT (ORANGE)	BENJAMIN MOORE #2015-10, SEMI-GLOSS FINISH	BENJAMIN MOORE	G.C	G.C	MULTI COLORED CEILING PANEL OR SCREEN PER PLAN	
P5	PAINT (GREEN)	BENJAMIN MOORE #2027-30, SEMI-GLOSS	BENJAMIN MOORE	G.C	G.C	MULTI COLORED CEILING PANEL OR SCREEN PER PLAN	
SP1	PLASTER WALL FINISH	PLASTER "CONCRETE LOOK" WALL FINISH REF: #43354-30/30 SAND ½ A973	OMEGA PRODUCTS INTERNATIONAL TEL:951.520.2586	G.C	G.C	SEE ELEVATIONS	
SP2	BLACK POWDER COAT	TIGER DRYLAC 44/90053 MILLENNIUM BLACK FLAT MATTE		G.C	G.C	SEE ELEVATIONS OR DETAIL	RAILING , METAL SUPPORT AND PANELS PER DETAIL
WALL PANELS/ LAMINATES:							
FRP	FIBERGLASS REFINF. POLYESTER PANEL	MARLITE: COTTON WHITE SMOOTH FINISH		G.C	G.C	KITCHEN/STORAGE WALLS AND WALL BEHIND SS AND BUILT IN CABINET PER PLAN	
LAM1	INTERIOR ARTS LAMINATE	#3023WAV-BRONZE WALNUT WAVE		G.C	G.C	DINING AREA BOOTH /BANQUETTE/ SERVICE & DRINK STATION CABINET SURFACE	
METAL, STAINLESS & TRIMS:							
SS1	STAINLESS STEEL	#4 BRUSHED FINISHED		G.C	G.C	MILLWORK BASE AND TRIM PER PLAN	
ML1	HOT ROLLED METAL PANELS	BLACK STEEL CLADDING W/ CLEAR COAT		MILLWORK	MILLWORK	TABLE BASE, ACCENT PANELS & TRIMS PER PLAN AND ELEVATIONS	SUBMIT SAMPLES FOR APPROVAL
SOLID SURFACE:							
SO1	SOLID SURFACE COUNTER TOP	CAESAR STONE CLASSICO #4120 RAVEN	CAESAR STONE MAGGIE RYBAK 619.623.0536	MILLWORK	MILLWORK	DRINK STATION COUNTER TOP	
RESINS & ACRYLICS:							
RP1	RESIN PANEL	UV CHROMA + WHITE OUT 1" GAUGE NO COLOR	3 FORM KATIE RENNE 858.255.9729 KATIE.RENNE@3-FORM.COM	OWNER	MILLWORK	BAR TOPS / TABLES	
WOOD:							
WD1	WHITE OAK	PLAIN SAWN	N/A	MILLWORK	MILLWORK	STAINED TO MATCH (LAM1)	
UPHOLSTERY & WALLCOVERING:							
UPH1	UPHOLSTERY (WHITE)	PATTERN: MAJESTIC COLOR: WHITE 100% POLYURETHANE	CONTRACT FABRICS CONTACT: SHARLENE LINDMARK 858-449-4546	MILLWORK	MILLWORK	MILLWORK BACK CUSHION	
UPH2	UPHOLSTERY (ORANGE)	ALL SEASONS, CG47, NASTURTIUM 100% VINYL 54"W	MAYER FABRICS	MILLWORK	MILLWORK	MILLWORK SEAT CUSHION	
UPH3	UPHOLSTERY (WHITE)	CUSTOM 12X12 PADDED WALL	MAYER FABRICS	OWNER	G.C	PADDED WALL PANEL	
WC1	CUSTOM VINYL WALL COVERING	KOROSEAL DIGITAL PRINT SUBSTRATES LINE #DS0100	CONTRACT FABRICS CONTACT: SHARLENE LINDMARK 858-449-4546	G.C	G.C	CUSTOM VINYL WALL COVERING	COORDINATE WITH studio MYID

NOTE:
ALL FINISHES SHALL COMPLY WITH CBC CHAPTER 8 AND CFC CHAPTER 8.

FINISH LEGEND

STUDIO MYID
Melissa Young
CID# 6251 NCIDQ Cert# 024408
2926 Upas St. San Diego, CA 92104
p: 760. 519. 4446
melissa@studioMYID.com

SIGNATURE:

This plan is a general arrangement of the interior space for the convenience of contractors and is made from available information. studioMYID assumes no responsibility for the accuracy of Interior measurements. Fabricators, Contractors and others utilizing these plans in connection with this job are responsible for securing their own measurements. Plumbing and Electrical information indicated on these plans are generally for interior/kitchen design and are intended as a reference only. studioMYID is not responsible for the engineering thereof, or for any plumbing or electrical fittings, work, and/or connections unless otherwise specifically provided for in the plans and specifications. studioMYID assumes no responsibility for work done by contractors or for any changes made necessary by local building or health department codes, ordinances, structural conditions, or by the substitution or changes in interior/kitchen design shown on the plan. These plans and designs contained herein are the property of studioMYID, and may not be reproduced, used, reviewed or examined by anyone, either all or in part, without first securing the written permission of studioMYID.

"THESE PLANS ARE FULLY PROTECTED UNDER THE COPYRIGHT LAWS OF THE UNITED STATES OF AMERICA".

FILE
DRAWN
REVIEWED

ISSUE	DATE	BY
FOR BACKGROUND	09.11.17	PSC,JA

PLAN CHECK	DATE	BY
1 PLAN CK #1	06.13.18	PSC,JA,MY

burger lounge III LLC
1198 Roseville Parkway
Suite #135
Roseville, CA 95661

PROJECT NO.
SCALE 1/4"=1'-0"
PRINTED
TITLE FINISH LEGEND

CITY APPROVAL STAMP:

SHEET I-9.1

INTERIOR DESIGN · CONCEPTING · BRANDING

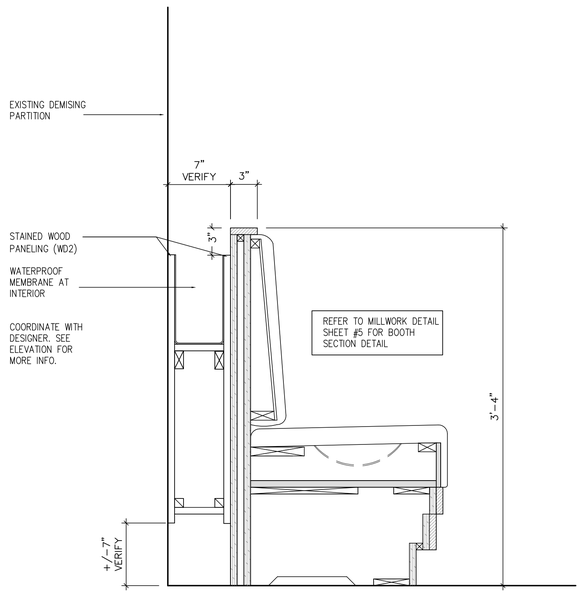

BOOTH WITH PLANTER BEHIND (8)
scale: 1-1/2"=1'-0"

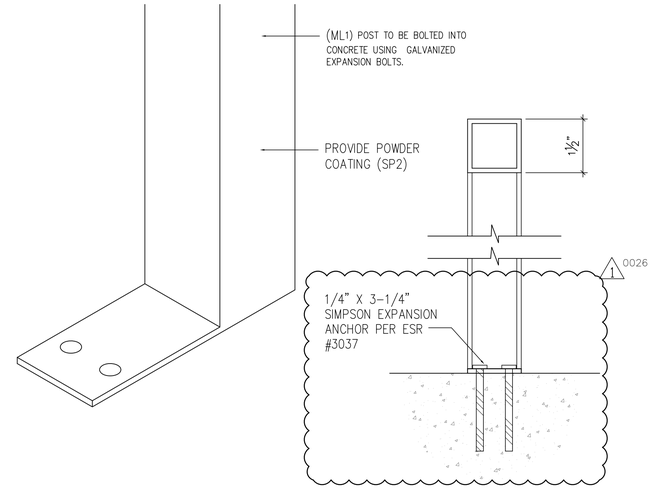

SEATING SUPPORT DETAIL (7)
scale: HALF FULL

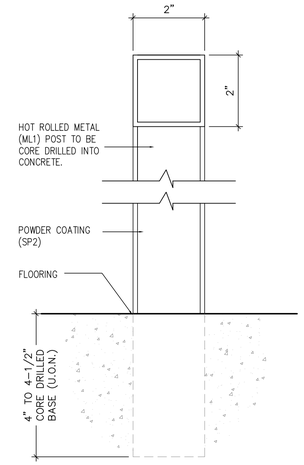

2X2 (ML1) POST SUPPORT TO CONCRETE DETAIL (6)
scale: HALF FULL

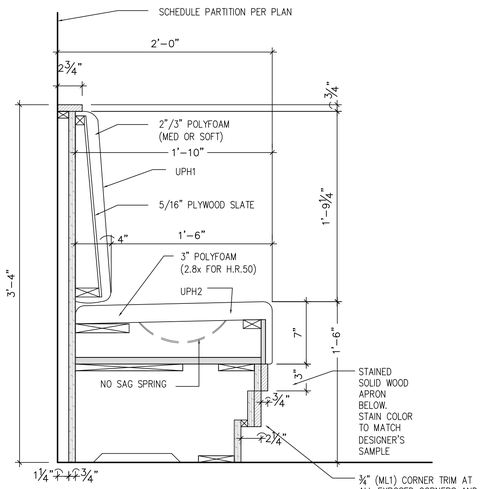

BOOTH SEATING DETAIL (5)
scale: 1-1/2"=1'-0"

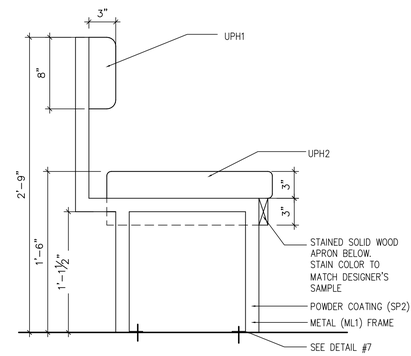

SEATING DETAIL (4)
scale: 1-1/2"=1'-0"

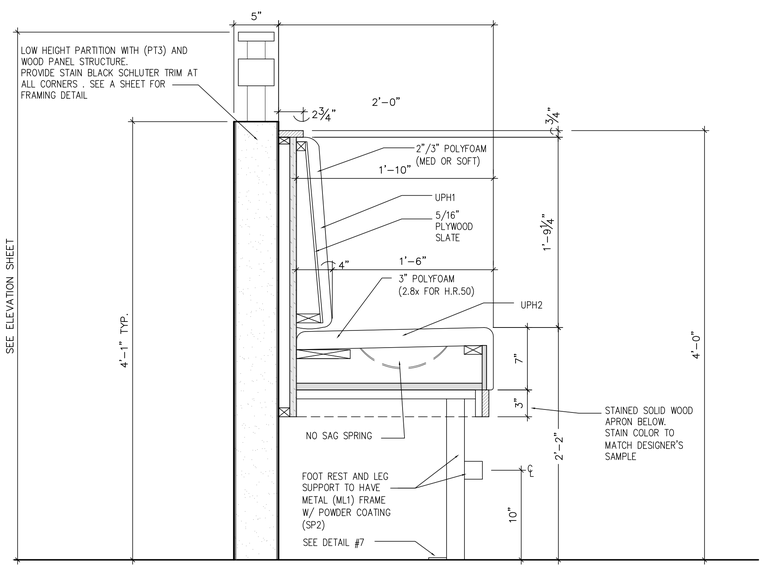

PT3 LOW HEIGHT WALL AND BAR HEIGHT SEATING DETAIL (3)
scale: 1-1/2"=1'-0"

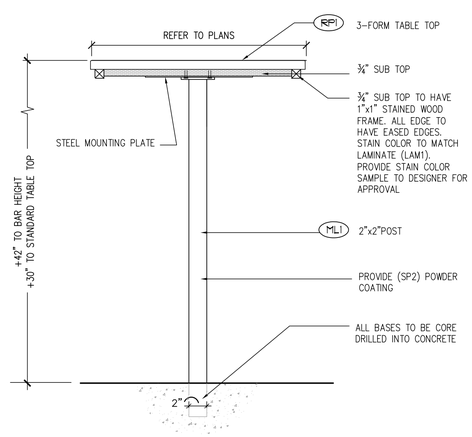

TABLE DETAIL (2)
scale: 1-1/2"=1'-0"

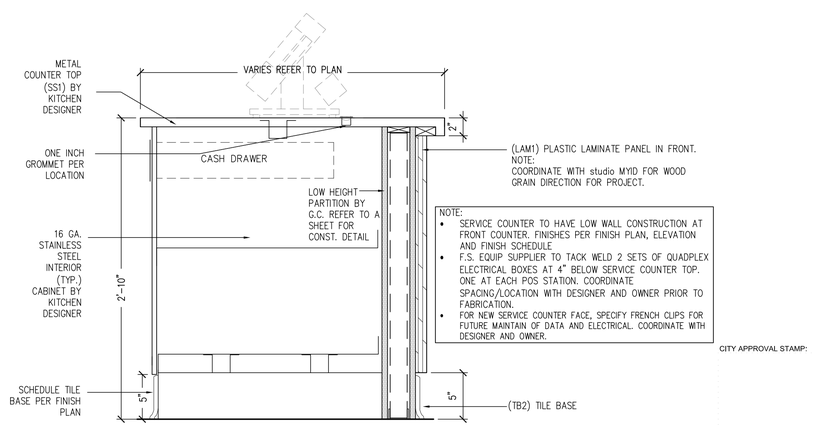

NOTE:
- SERVICE COUNTER TO HAVE LOW WALL CONSTRUCTION AT FRONT COUNTER. FINISHES PER FINISH PLAN, ELEVATION AND FINISH SCHEDULE
- F.S. EQUIP SUPPLIER TO TACK WELD 2 SETS OF QUADPLEX ELECTRICAL BOXES AT 4" BELOW SERVICE COUNTER TOP. ONE AT EACH POS STATION. COORDINATE SPACING/LOCATION WITH DESIGNER AND OWNER PRIOR TO FABRICATION.
- FOR NEW SERVICE COUNTER FACE, SPECIFY FRENCH CLIPS FOR FUTURE MAINTAIN OF DATA AND ELECTRICAL. COORDINATE WITH DESIGNER AND OWNER.

CITY APPROVAL STAMP:

SERVICE COUNTER SECTION (1)
scale: 1/2"=1'-0"

STUDIO MYID
Melissa Young
CID# 6251 NCIDQ Cert# 024408
2926 Upas St. San Diego, CA 92104
p: 760. 519. 4446
melissa@studioMYID.com

SIGNATURE:
1 0036

This plan is a general arrangement of the interior space for the convenience of contractors and is made from available information. studioMYID assumes no responsibility for the accuracy of Interior measurements. Fabricators, Contractors and others utilizing these plans in connection with this job are responsible for securing their own measurements. Plumbing and Electrical information indicated on these plans are generally for interior/kitchen design and are intended as a reference only. studioMYID is not responsible for the engineering thereof, or for any plumbing or electrical fittings, work, and/or connections unless otherwise specifically provided for in the plans and specifications. studioMYID assumes no responsibility for work done by contractors or for any changes made necessary by local building or health department codes, ordinances, structural conditions, or by the substitution or changes in interior/kitchen design shown on the plan. These plans and designs contained herein are the property of studioMYID, and may not be reproduced, used, reviewed or examined by anyone, either all or in part, without first securing the written permission of studioMYID.

"THESE PLANS ARE FULLY PROTECTED UNDER THE COPYRIGHT LAWS OF THE UNITED STATES OF AMERICA".

FILE		
DRAWN		
REVIEWED		

ISSUE	DATE	BY
FOR BACKGROUND	09.11.17	PSC,JA

PLAN CHECK	DATE	BY
1 PLAN CK #1	06.13.18	PSC,JA,MY

burger lounge III LLC
1198 Roseville Parkway
Suite #135
Roseville, CA 95661
1 0039 0041

PROJECT NO.	
SCALE	AS NOTED
PRINTED	
TITLE	MILLWORK DETAILS

SHEET **I-11.0**

• INTERIOR DESIGN • CONCEPTING • BRANDING • INTERIOR DESIGN • CONCEPTING • BRANDING • INTERIOR DESIGN • CONCEPTING • BRANDING • INTERIOR DESIGN • CONCEPTING • BRANDING • INTERIOR DESIGN • CONCEPTING • BRANDING

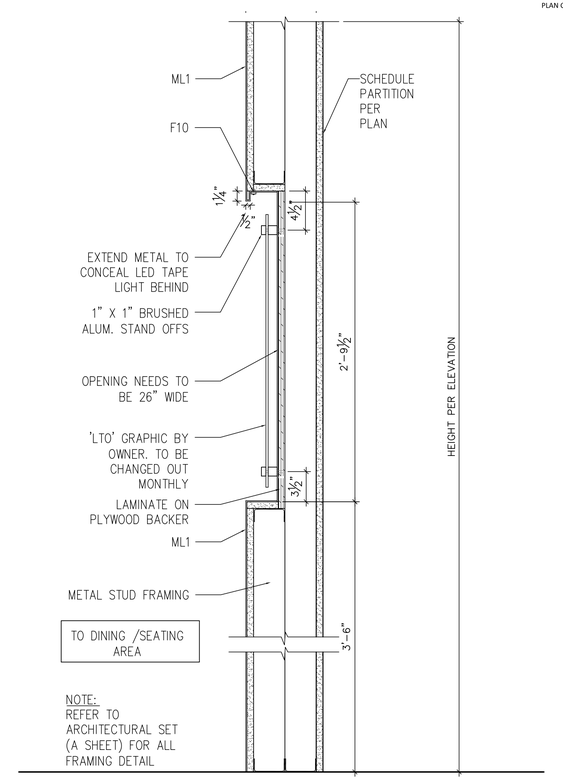

NOTE:
REFER TO ARCHITECTURAL SET (A SHEET) FOR ALL FRAMING DETAIL

LIMITED TIME OFFER "LTO" GRAHIC WALL DETAIL (2)

scale: 1-1/2"=1'-0"

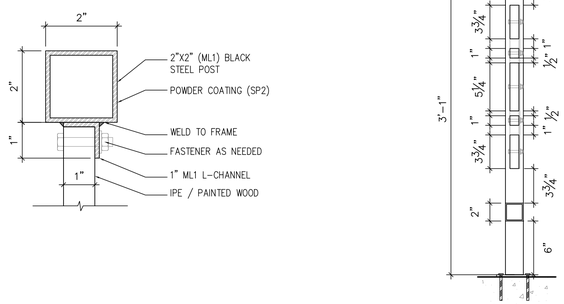

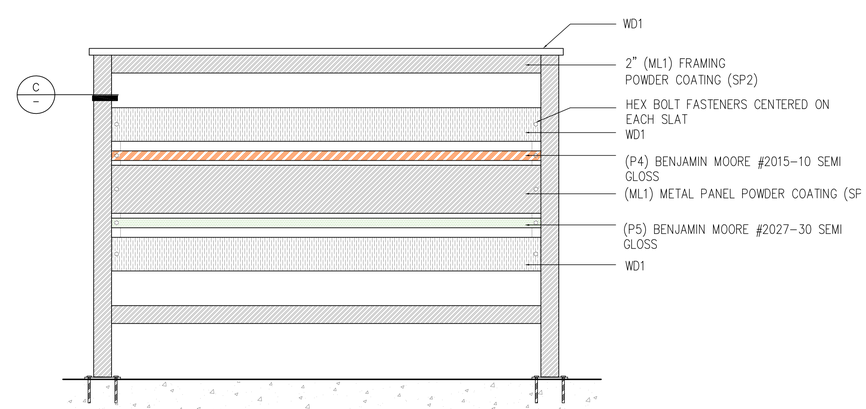

C. 2X2 POST DETAIL
scale: HALF

B. SECTION
scale: 1-1/2"=1'-0"

A. TYPICAL ELEVATION
scale: 1-1/2"=1'-0"

CITY APPROVAL STAMP:

PATIO RAILING TYPICAL ELEVATON AND DETAILS (1)

scale: PER PLAN

STUDIO MYID
Melissa Young
CID# 6251 NCIDQ Cert# 024408
2926 Upas St. San Diego, CA 92104
p: 760. 519. 4446
melissa@studioMYID.com

SIGNATURE:

1 00.36

This plan is a general arrangement of the interior space for the convenience of contractors and is made from available information. studioMYID assumes no responsibility for the accuracy of Interior measurements. Fabricators, Contractors and others utilizing these plans in connection with this job are responsible for securing their own measurements. Plumbing and Electrical information indicated on these plans are generally for interior/kitchen design and are intended as a reference only. studioMYID is not responsible for the engineering thereof, or for any plumbing or electrical fittings, work, and/or connections unless otherwise specifically provided for in the plans and specifications. studioMYID assumes no responsibility for work done by contractors or for any changes made necessary by local building or health department codes, ordinances, structural conditions, or by the substitution or changes in interior/kitchen design shown on the plan. These plans and designs contained herein are the property of studioMYID, and may not be reproduced, used, reviewed or examined by anyone, either all or in part, without first securing the written permission of studioMYID.

"THESE PLANS ARE FULLY PROTECTED UNDER THE COPYRIGHT LAWS OF THE UNITED STATES OF AMERICA".

FILE		
DRAWN		
REVIEWED		

ISSUE	DATE	BY
FOR BACKGROUND	09.11.17	PSC,JA

PLAN CHECK	DATE	BY
1 PLAN CK #1	06.13.18	PSC,JA,MY

burger lounge III LLC
1198 Roseville Parkway
Suite #135
Roseville, CA 95661

1 0039 0041

PROJECT NO.
SCALE AS NOTED
PRINTED
TITLE

MILLWORK DETAILS

SHEET **I-11.1**

• INTERIOR DESIGN • CONCEPTING • BRANDING • INTERIOR DESIGN • CONCEPTING • BRANDING • INTERIOR DESIGN • CONCEPTING • BRANDING • INTERIOR DESIGN • CONCEPTING • BRANDING

PLAN CK #1 RE-SUBMITTAL,PRICING& PLAN UPDATE @ (06.13.18)

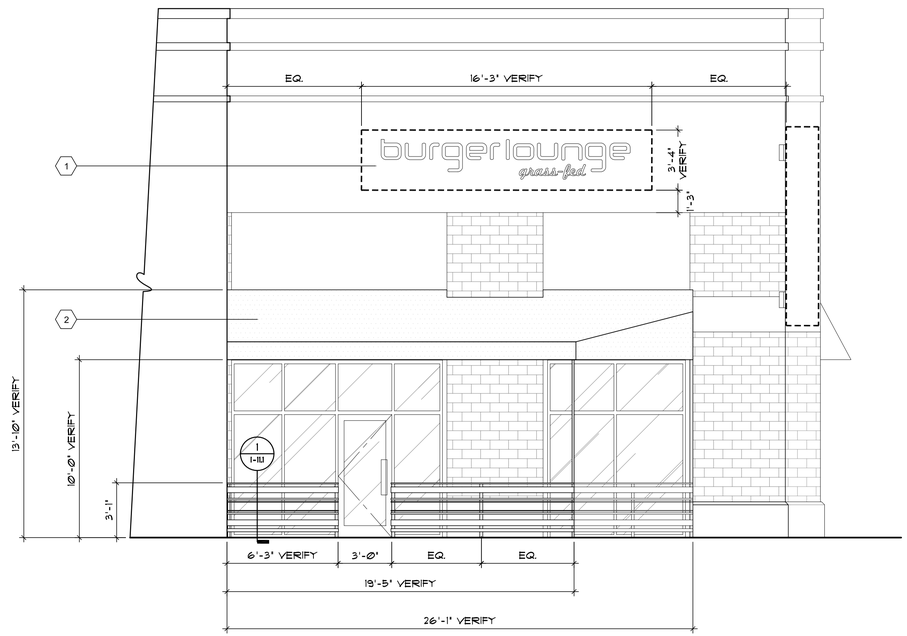

WEST STOREFRONT ELEVATION WITH PATIO (2)

scale: 1/4"=1'-0"

NOTE:

- G.C TO VERIFY EXISTING BUILDING CONDITION IN FIELD.
- ALL SIGNAGE NEEDS TO BE UNDER A SEPARATE PERMIT.
- NEW AWING TO BE UNDER A SEPARATE PERMIT.

1 0011 0012 0021 0020

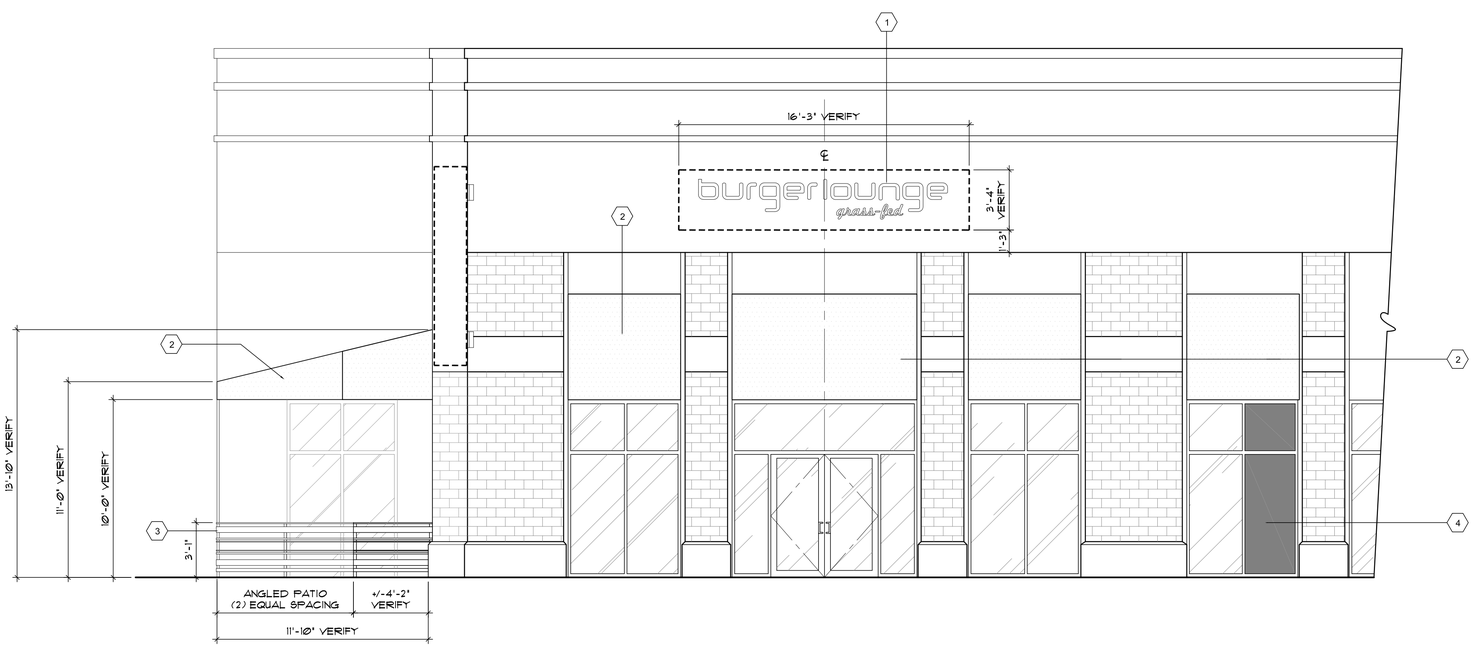

STOREFRONT SOUTH ELEVATION (1)

scale: 1/4"=1'-0"

0021 0020 1

KEY NOTES:

1. BURGER LOUNGE SIGN. PROVIDE POWER. COORDINATE WITH SIGNAGE COMPANY AND studio MYID.
   NOTE: ALL SIGNAGE NEEDS TO BE UNDER A SEPARATE PERMIT.
2. NEW AWING.
   NOTE: NEW AWING TO BE UNDER A SEPARATE PERMIT.
3. NEW PATIO. SEE DETAIL #1/I-11.1.
4. GLAZING WITH GRAPHIC FILM PER PLAN. COORDINATE WITH studio MYID.

CITY APPROVAL STAMP:

STUDIO MYID

Melissa Young
CID# 6251 NCIDQ Cert# 024408
2926 Upas St. San Diego, CA 92104
p: 760. 519. 4446
melissa@studioMYID.com

SIGNATURE:

1 0036

This plan is a general arrangement of the interior space for the convenience of contractors and is made from available information. studioMYID assumes no responsibility for the accuracy of interior measurements. Fabricators, Contractors and others utilizing these plans in connection with this job are responsible for securing their own measurements. Plumbing and Electrical information indicated on these plans are generally for interior/kitchen design and are intended as a reference only. studioMYID is not responsible for the engineering thereof, or for any plumbing or electrical fittings, work, and/or connections unless otherwise specifically provided for in the plans and specifications. studioMYID assumes no responsibility for work done by contractors or for any changes made necessary by local building or health department codes, ordinances, structural conditions, or by the substitution or changes in interior/kitchen design shown on the plan. These plans and designs contained herein are the property of studioMYID, and may not be reproduced, used, reviewed or examined by anyone, either all or in part, without first securing the written permission of studioMYID.

"THESE PLANS ARE FULLY PROTECTED UNDER THE COPYRIGHT LAWS OF THE UNITED STATES OF AMERICA".

FILE		
DRAWN		
REVIEWED		

ISSUE	DATE	BY
FOR BACKGROUND	09.11.17	PSC,JA

PLAN CHECK	DATE	BY
1 PLAN CK #1	06.13.18	PSC,JA,MY

burger lounge III LLC

1198 Roseville Parkway
Suite #135
Roseville, CA 95661

1 0039 0041

PROJECT NO.

SCALE AS NOTED

PRINTED

TITLE

EXTERIOR ELEVATIONS

THE CONTRACTOR SHALL PROVIDE THE DESIGNER WITH THREE (3) SETS OF PRECISE DRAWINGS ("SHOP DRAWINGS") THAT DEPICT THE ACTUAL MATERIALS, FABRICATION, JOINERY, NON-SPECIFIED HARDWARE, ETC., OF ALL MILLWORK SPECIFIED FOR THIS PROJECT. THESE "SHOP DRAWINGS" SHALL BE SUBMITTED TO THE ARCHITECT FOR REVIEW PRIOR TO THE FABRICATION OF ANY MILLWORK. THE DESIGNER'S DESIGN INTENT FOR THE MILLWORK, AS DEPICTED IN THE DESIGNER'S DRAWINGS FOR THIS PROJECT, SHALL NOT BE MODIFIED WITHOUT THE DESIGNER'S EXPRESS WRITTEN APPROVAL.

SHEET

I-12.0

• INTERIOR DESIGN • CONCEPTING • BRANDING • INTERIOR DESIGN • CONCEPTING • BRANDING • INTERIOR DESIGN • CONCEPTING • BRANDING • INTERIOR DESIGN • CONCEPTING • BRANDING

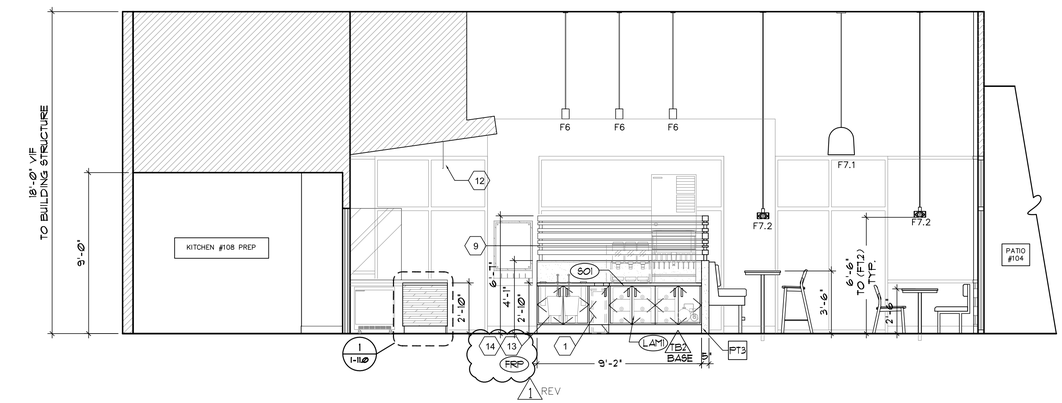

SOUTH ELEVATION (VIEW TO SEATING, BEVERAGE COUNTER AND SERVICE COUNTER) 6

scale: 1/2"=1'-0"

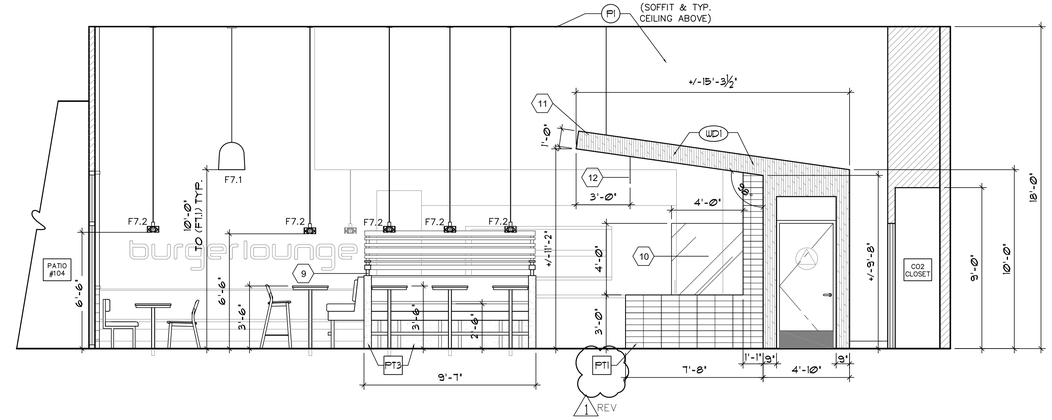

NORTH ELEVATION (VIEW TO SEATING AND SERVICE COUTNER) 5

scale: 1/2"=1'-0"

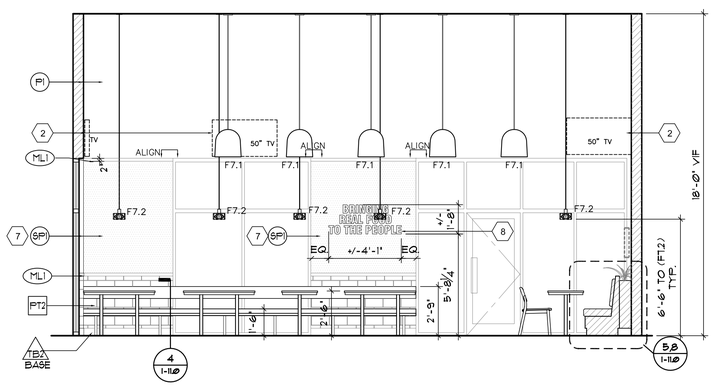

WEST ELEVATION (VIEW TO SEATING #101, #103) 4

scale: 1/4"=1'-0"

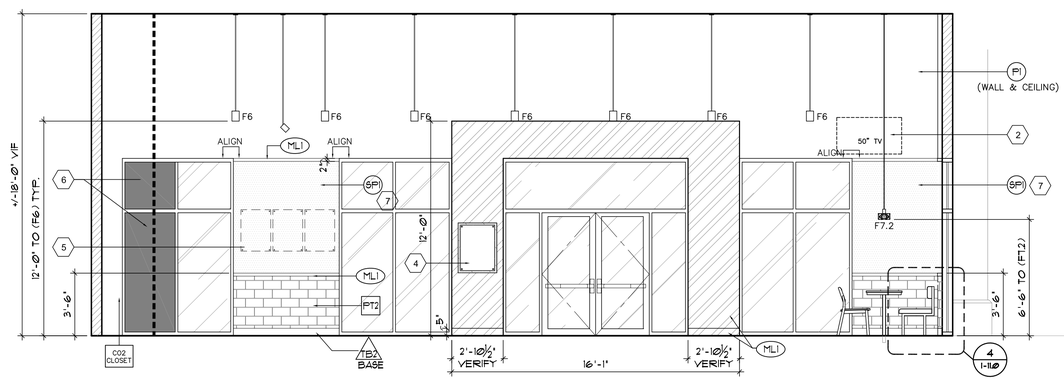

SOUTH ELEVATION (VIEW TO PAIR DOOR ENTRANCE) 3

scale: 1/4"=1'-0"

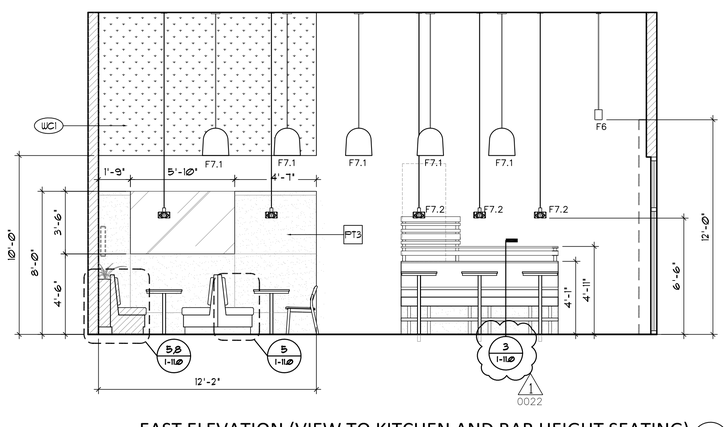

EAST ELEVATION (VIEW TO KITCHEN AND BAR HEIGHT SEATING) 2

scale: 1/4"=1'-0"

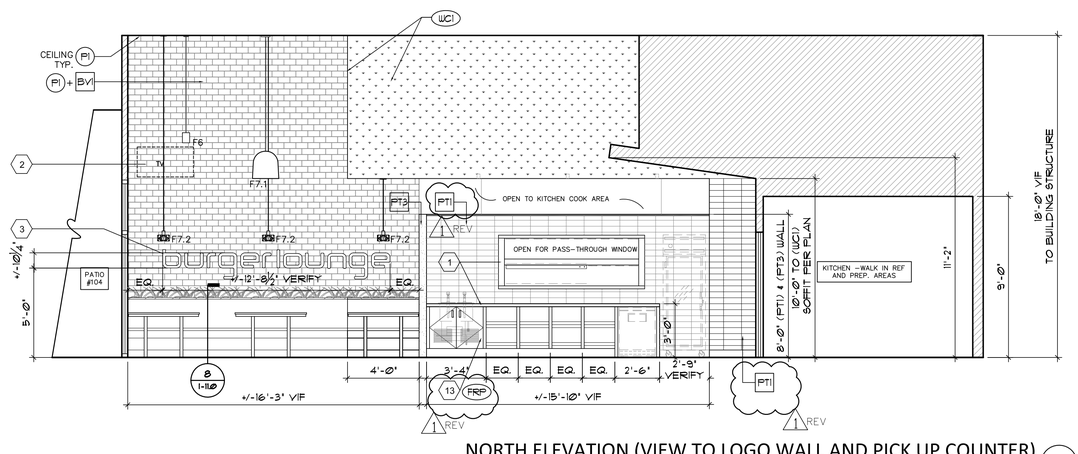

NORTH ELEVATION (VIEW TO LOGO WALL AND PICK UP COUNTER) 1

scale: 1/4"=1'-0"

KEY NOTES:

1. REFER TO FOOD SERVICE PLAN FOR ADDITIONAL EQUIPMENT LAYOUT ON SERVICE COUNTER, PICK UP WINDOW /COUNTER AND BEVERAGE STATION.
2. PROVIDE POWER DATA FOR TV. COORDINATE WITH OWNER FOR MOUNTING HEIGHT.
3. BACK LIT "BURGER LOUNGE" SIGN. PROVIDE POWER. COORDINATE WITH DESIGNER.
4. LIMITED TIME OFFER "LTO" GRAPHIC DISPLAY. REFER TO DETAIL #2/I-11.1.
5. PROVIDE (3) GRAPHIC PANELS WITH SS STAND OFF ON THIS WALL. COORDINATE WITH BURGER LOUNGE AND studio MYID.
6. APPLY GRAPHIC FILM AT INTERIOR GLAZING. COORDINATE WITH OWNER AND DESIGNER.
7. CONCRETE FAUX FINISH. PROVIDE SAMPLE FOR APPROVAL.
8. WALL TO HAVE TEXT "BRING REAL FOOD TO THE PEOPLE". COORDINATE WITH studio MYID.
9. MULTI- COLORED WOOD SLATS AND PT3 PARTITION WITH (ML1) POST SUPPORT. REFER TO #2/I-12.1 AND SEE A SHEET WITH CONNECTION DETAIL.
10. FRAME LESS GLAZING. SEE A SHEET FOR CONNECTION DETAIL.
11. SLOPED WD1 CEILING. SEE A SHEET FOR CONST. DETAIL.
12. SUSPENDED GRASS FEED AND PICK UP SIGN. COORDINATE WITH studio MYID FOR DETAIL.
13. NO TILE AT THE BACK OF CABINET. APPLY FIBERGLASS REINFORCED POLYESTER PANEL (FRP) OR DRY WALL BEHIND CABINET COORDINATE WITH DESIGNER.
14. BUILT IN CABINET TO BE BUILT FROM END WALL TO END WALL WITH NO DRYWALL GAP ON ENDS OF BASE CABINET.

1 REV

NOTE:
EXISTING BUILDING STRUCTURE TO BE VERIFIED IN FIELD

CITY APPROVAL STAMP:

STUDIO MYID
Melissa Young
CID# 6251 NCIDQ Cert# 024408
2926 Upas St. San Diego, CA 92104
p: 760. 519. 4446
melissa@studioMYID.com

SIGNATURE:

1 00.36

This plan is a general arrangement of the interior space for the convenience of contractors and is made from available information. studioMYID assumes no responsibility for the accuracy of interior measurements. Fabricators, Contractors and others utilizing these plans in connection with this job are responsible for securing their own measurements. Plumbing and Electrical information indicated on these plans are generally for interior/kitchen design and are intended as a reference only. studioMYID is not responsible for the engineering thereof, or for any plumbing or electrical fittings, work, and/or connections unless otherwise specifically provided for in the plans and specifications. studioMYID assumes no responsibility for work done by contractors or for any changes made necessary by local building or health department codes, ordinances, structural conditions, or by the substitution or changes in interior/kitchen design shown on the plan. These plans and designs contained herein are the property of studioMYID, and may not be reproduced, used, reviewed or examined by anyone, either all or in part, without first securing the written permission of studioMYID.

"THESE PLANS ARE FULLY PROTECTED UNDER THE COPYRIGHT LAWS OF THE UNITED STATES OF AMERICA".

FILE		
DRAWN		
REVIEWED		

ISSUE	DATE	BY
FOR BACKGROUND	09.11.17	PSC,JA

PLAN CHECK	DATE	BY
1 PLAN CK #1	06.13.18	PSC,JA,MY

burger lounge III LLC
1198 Roseville Parkway
Suite #135
Roseville, CA 95661

0039
0041

PROJECT NO.
SCALE AS NOTED
PRINTED
TITLE

INTERIOR ELEVATIONS

THE CONTRACTOR SHALL PROVIDE THE DESIGNER WITH THREE (3) SETS OF PRECISE DRAWINGS ("SHOP DRAWINGS") THAT DEPICT THE ACTUAL MATERIALS, FABRICATION, JOINERY, NON-SPECIFIED HARDWARE, ETC., OF ALL MILLWORK SPECIFIED FOR THIS PROJECT. THESE "SHOP DRAWINGS" SHALL BE SUBMITTED TO THE ARCHITECT FOR REVIEW PRIOR TO THE FABRICATION OF ANY MILLWORK. THE DESIGNER'S DESIGN INTENT FOR THE MILLWORK, AS DEPICTED IN THE DESIGNER'S DRAWINGS FOR THIS PROJECT, SHALL NOT BE MODIFIED WITHOUT THE DESIGNER'S EXPRESS WRITTEN APPROVAL.

SHEET **I-12.1**

1 REV LT (F7.1)

INTERIOR DESIGN · CONCEPTING · BRANDING · INTERIOR DESIGN · CONCEPTING · BRANDING · INTERIOR DESIGN · CONCEPTING · BRANDING · INTERIOR DESIGN · CONCEPTING · BRANDING

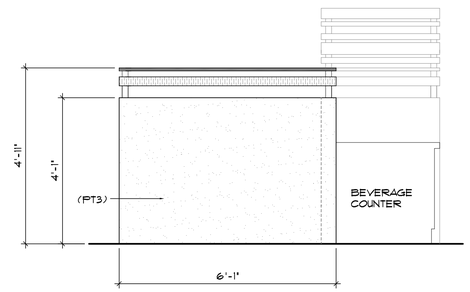

D. WEST ELEVATION (SIDE WALL WITH BEVERAGE COUNTER)

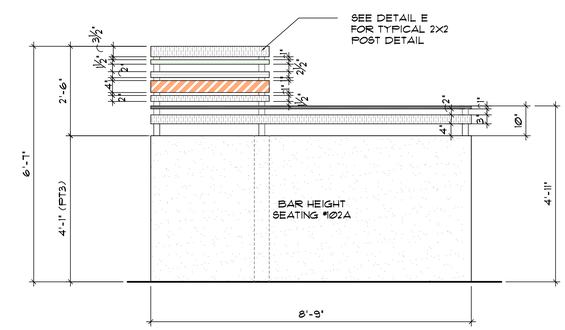

C. EAST ELEVATION (WALL BEHIND BAR HEIGHT SEATING)

LEGEND:

- (WD1) IPE WOOD OIL FINISH (WD1-INTERIOR & WD2-EXTERIOR)
- (P2) BENJAMIN MOORE TO MATCH FRAZEE WHITE SHADOW #181, SEMI-GLOSS FINISH
- (P3) BENJAMIN MOORE TO MATCH SHERWIN WILLIAMS IRON ORE #SW7069, SEMI-GLOSS FINISH
- (P4) BENJAMIN MOORE #2015-10, SEMI-GLOSS FINISH
- (P5) BENJAMIN MOORE #2027-30, SEMI-GLOSS FINISH

NOTE:
1. G.C TO SUBMIT SAMPLES, SUBMIT SHOP DRAWING AND COORDINATE WITH studio MYID BEFORE FINAL INSTALLATION.

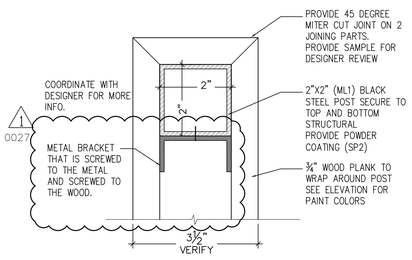

E. 2X2 POST SUPPRT WITH WOOD PANEL DETAIL

scale: HALF

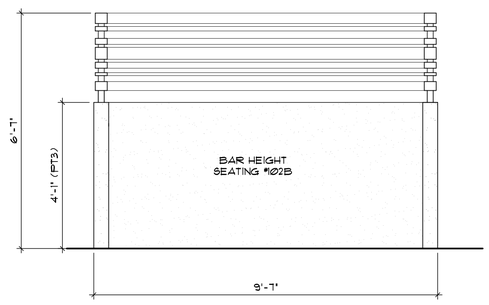

B. SOUTH ELEVATION (WALL S WITH BAR HEIGHT SEATING)

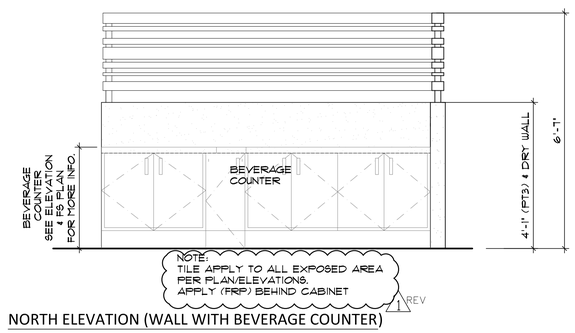

A. NORTH ELEVATION (WALL WITH BEVERAGE COUNTER)

WOOD SLAT LOW WALL ELEVATIONS AND DETAIL (2)

scale: 1/2"=1'-0"

KEY NOTES:

1. REFER TO FOOD SERVICE PLAN FOR ADDITIONAL EQUIPMENT LAYOUT ON SERVICE COUNTER, PICK UP WINDOW /COUNTER AND BEVERAGE STATION.
2. MENU BOARDS TO BE CENTERED AT WALL. COORDINATE WITH OWNER AND studio MYID,
3. SLOPED WD1 CEILING. SEE A SHEET FOR CONST. DETAIL.
4. SUSPENDED GRASS FEED AND PICK UP SIGN. COORDINATE WITH STUDIO MYID FOR DETAIL.

NOTE:
EXISTING BUILDING STRUCTURE TO BE VERIFIED IN FIELD

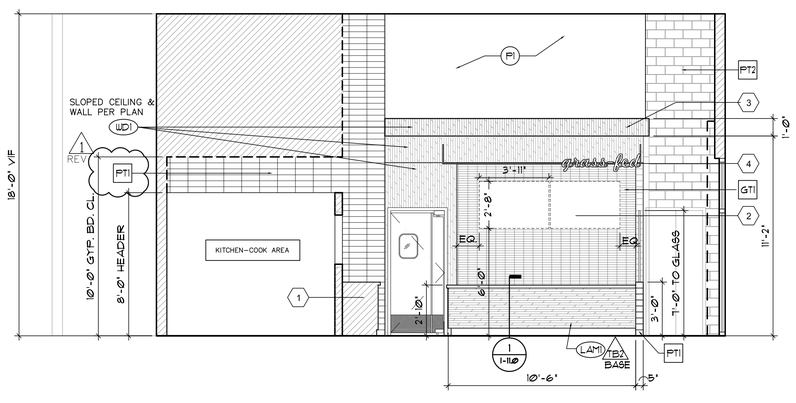

EAST ELEVATION (VIEW TO SERVICE COUNTER) (1)

scale: 1/4"=1'-0"

CITY APPROVAL STAMP:

STUDIO MYID

Melissa Young
CID# 6251 NCIDQ Cert# 024408
2926 Upas St. San Diego, CA 92104
p: 760. 519. 4446
melissa@studioMYID.com

SIGNATURE:

1 \00.36

This plan is a general arrangement of the interior space for the convenience of contractors and is made from available information. studioMYID assumes no responsibility for the accuracy of interior measurements. Fabricators, Contractors and others utilizing these plans in connection with this job are responsible for securing their own measurements. Plumbing and Electrical information indicated on these plans are generally for interior/kitchen design and are intended as a reference only. studioMYID is not responsible for the engineering thereof, or for any plumbing or electrical fittings, work, and/or connections unless otherwise specifically provided for in the plans and specifications. studioMYID assumes no responsibility for work done by contractors or for any changes made necessary by local building or health department codes, ordinances, structural conditions, or by the substitution or changes in interior/kitchen design shown on the plan. These plans and designs contained herein are the property of studioMYID, and may not be reproduced, used, reviewed or examined by anyone, either all or in part, without first securing the written permission of studioMYID.

"THESE PLANS ARE FULLY PROTECTED UNDER THE COPYRIGHT LAWS OF THE UNITED STATES OF AMERICA".

FILE
DRAWN
REVIEWED

ISSUE	DATE	BY
FOR BACKGROUND	09.11.17	PSC,JA

PLAN CHECK	DATE	BY
1 PLAN CK #1	06.13.18	PSC,JA,MY

burger lounge III LLC
(1198) Roseville Parkway
Suite #135
Roseville, CA 95661
1 0039 0041

PROJECT NO.
SCALE AS NOTED
PRINTED
TITLE

INTERIOR ELEVATIONS

THE CONTRACTOR SHALL PROVIDE THE DESIGNER WITH THREE (3) SETS OF PRECISE DRAWINGS ("SHOP DRAWINGS") THAT DEPICT THE ACTUAL MATERIALS, FABRICATION, JOINERY, NON-SPECIFIED HARDWARE, ETC., OF ALL MILLWORK SPECIFIED FOR THIS PROJECT. THESE "SHOP DRAWINGS" SHALL BE SUBMITTED TO THE ARCHITECT FOR REVIEW PRIOR TO THE FABRICATION OF ANY MILLWORK. THE DESIGNER'S DESIGN INTENT FOR THE MILLWORK, AS DEPICTED IN THE DESIGNER'S DRAWINGS FOR THIS PROJECT, SHALL NOT BE MODIFIED WITHOUT THE DESIGNER'S EXPRESS WRITTEN APPROVAL.

SHEET **I-12.2**

• INTERIOR DESIGN • CONCEPTING • BRANDING • INTERIOR DESIGN • CONCEPTING • BRANDING • INTERIOR DESIGN • CONCEPTING • BRANDING • INTERIOR DESIGN • CONCEPTING • BRANDING

BURGER LOUNGE- RESTROOM PLUMBING/ACCESSORIES SCHEDULE

SYMBOL	QTY	DESCRIPTION	MFG	MODEL #/ FINISH	DIMENSIONS	CONTACT & NOTES
1 REV RR.PX01 (NEW OPTION)	1	(TANK LESS TOILET/WATER CLOSET) OPTIMA PLUS® BATTERY POWERED HET ROYAL® FLUSHOMETER AND ADA COMPLIANT HET WATER CLOSET WETS 2020.1402-1.28-SMO	SLOAN	MODEL#20201402	25-1/4" D (SEAT) X17" H. (FROM FLR. TO SEATING) 26-1/8" ~28-1/8" (FROM WALL TO FRONT SEATING)	LOCATION PER ELEVATION
RR.PX02	1	URINAL	TOTO	HIGH EFFICIENCY ⅛ GPD WASHOUT URINAL UT105UVG-#01	24"L X13-3/4"WX17"H	LOCATION PER ELEVATION
RR.ACC1	1 (SET)	36" LONG & 42" LONG GRAD BAR @ 1-1/2" O.D. HEAVY DUTY S.S. GRAB BAR W/ CONCEALED MOUNTING	BRADLEY	#812	1-1/2"O.D. (TUBE) X36" L & X42" L 3-16" DIA. FLANGES	LOCATION PER ELEVATION
RR.ACC2	1	SURFACE MOUNTED XLERATOR eco HAND DRYER WITH ADA-COMPLIANT RECESS KIT	DXLERATOR	#XL-SB-ECO (BRUSHED STAINLESS STEEL) #B3474	12-11/16"H. x 11-13/32"W. x 4-1/2" ~6-11/16"D.	C&L SUPPLY COMPANY 323.258.1940 WWW.CANDLSUPPLY.COM
RR.ACC3	1	CLASSIC SERIES RECESSED PAPER TOWEL/WASTE RECEPTACLE	BOBRICK	#B-3944 FINISH: SATIN FINISH STAINLESS STEEL	56"H. x 17-3/16"W. x 8-5/16"D.	NOTE: * VERIFY WITH OWNER IF RR.ACC2 & RR.ACC3 ARE BOTH REQUIRED PER PROJECT
RR.ACC4A	1	RECESSED TOILET SEAT COVER DISPENSER	BOBRICK	#B-301, SATIN FINISH STAINLESS STEEL	ITEM: 15-3/16"W.x10-3/4"H. x 2-9/16"D. PROVIDE ROUGH WALL OPENING: 15-5/8"Wx11-1/4"H.x2-5/8" MIN. RECESSED DEPTH	LOCATION PER ELEVATION
RR.ACC4B	1	RECESSED SANITARY NAPKIN DISPOSAL	BOBRICK	#B-353, SATIN FINISH STAINLESS STEEL	ITEM: 12-3/4"W.x17-3/16"H.x 3-15/16"D. PROVIDE ROUGH WALL OPENING: 11-1/4"W.x15-5/8"H.x4" MIN. RECESSED DEPTH	LOCATION PER ELEVATION
RR.ACC4C	1	RECESSED TISSUE DISPENSER	BOBRICK	#B-35883, SATIN FINISH STAINLESS STEEL	ITEM: 13-5/8"W. x8-7/16"H.x 3-15/16"D. PROVIDE ROUGH WALL OPENING: 12-1/2"W.x7-3/8"H.x4" MIN. RECESSED DEPTH	LOCATION PER ELEVATION
1 REV RR.ACC5	1	SURFACE MOUNTED SOAP DISPENSER	BOBRICK	#2111 FINISH: SATIN FINISH STAINLESS STEEL	4-3/16"W. x 8-5/16"D. x 2-7/8"D.	LOCATION PER ELEVATION
RR.ACC6 (NEW OPTION)	1	TOUCH LESS LAVATORY FAUCET WITH TEMPERATURE MIXER AND LITHIUM BATTERY	GROHE AMERICA	EUROSMART COSMOPOLITAN E MODEL #36329 GROHE STARLIGHT FINISH	1-7/8"W. x 4-15/16"H.x 5-5/8"D.	1(800) 444-7643 US-CUSTOMERSERVICE @GROHE.COM
RR.ACC7	1	WALL MOUNTED, REAR DRAIN SINK WITH ONE FAUCET HOLE	BISSONNET	ELEMENTS RENOVA #222255 IN WHITE	17.3"D. x 21.7"W. x 7.7"D.	FAUCETDIRECT.COM *VERIFY FINAL OPTION WITH DESIGNER
RR.ACC8	1	COAT HOOK (VERIFY LOCATON WITH DESIGNER)	GATCO	#2946611S FINISH: STAIN NICKEL	2.25"H.	AT DOOR. VERIFY
RR.ACC9 –F14	1 F14 (2)	SURFACE MOUNTED MIRROR WITH LED LIGHTING (F14) ON BOTH SIDES SEE CEILING SCHEDULE PLAN F14 FOR SPEC.	PER PLAN	REFER TO DETAIL #4	24"W.x36"H. (MIRROR)	REFER TO DETAIL #3
RR.ACC10	1	BABY CHANGING STATION	(BOBRICK) KOALA KARE CHILD CARE PRODUCT	#KB200-SS	35-3/16"W x 22-1/4"H x 4"D EXTENDED-23-3/16"	

NOTES:

1. ALL PLUMBING FIXTURES AND ACCESSORY ITEMS SHOULD BE INSTALLED PER ADAAG & 2013 CBC ACCESSIBILITY REQUIREMENTS AND PER MANUFACTURER'S GUIDELINES & RECOMMENDATIONS.
2. ~~REFER TO SHEET #A-3.3/A-3.4 FOR ACCESSIBILITY REQUIREMENTS.~~ 1/0028 OMITTED
3. CONTRACTORS TO VERIFY ALL QUANTITY OF PLUMBING FIXTURES AND ACCESSORIES.
4. REFER TO A SHEET FOR ACCESSIBILITY REQUIREMENTS AND MORE INFORMATION.

PLUMBING AND ACCESSORIES SCHDEULE (4)

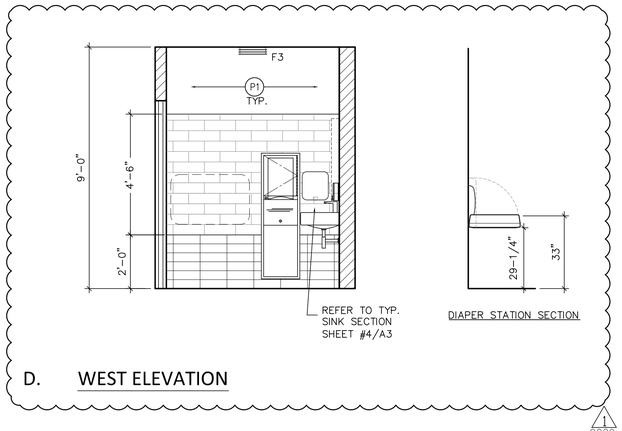

D. WEST ELEVATION

1/0029

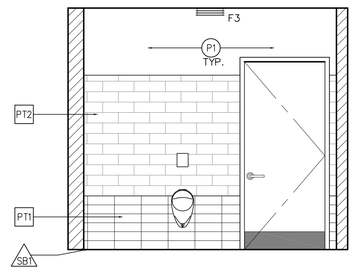

C. SOUTH ELEVATION

NOTE:
PROVIDE STAINLESS SCHLUTER STRIPES BETWEEN (P1)&(PT2) AND (PT2)&(PT1). G.C TO PROVIDE SAMPLE FOR DESIGNER'S APPROVAL.

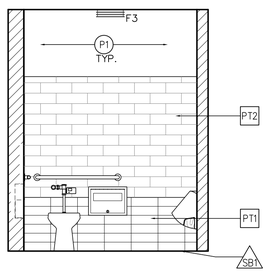

B. EAST ELEVATION

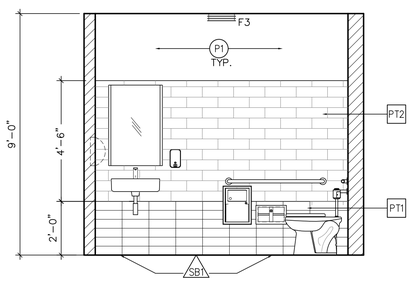

A. NORTH ELEVATION

1 REV SPEC

RESTROOM #109 ELEVATIONS (2)
scale: 3/8"=1'-0"

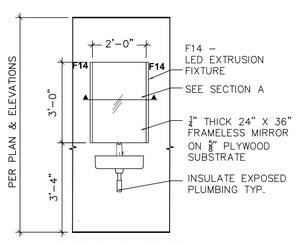

F14 FIXTURE WITH MIRROR ELEV

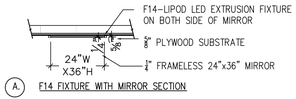

A. F14 FIXTURE WITH MIRROR SECTION

TYP. MIRROR & F14 ELEVATION & SECTION (3)
scale: 3/8"=1'-0"

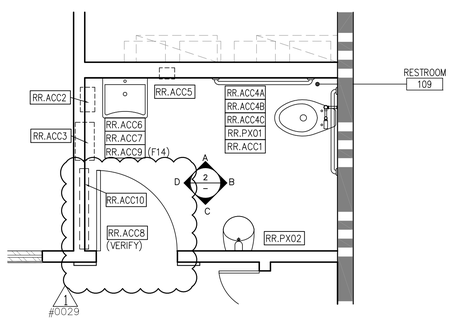

NOTE:
REFER TO A SHEET FOR RESTROOM DIMENSIONS, WATER PROOF WALL, DETAIL AND ADA REQUIREMENT. G.C. TO COORDINATE WITH OWNER WITH FINAL RESTROOM ACCESSORIES INSTALLATION.

PLUMBING AND ACCESSORIES SYMBOLS

CITY APPROVAL STAMP:

REF

1 REV SPEC

ENLARGED RESTROOM PLAN (#109) (1)
scale: 3/8"=1'-0"

STUDIO MYID
Melissa Young
CID# 6251 NCIDQ Cert# 024408
2926 Upas St. San Diego, CA 92104
p: 760. 519. 4446
melissa@studioMYID.com

SIGNATURE:

1 0036

This plan is a general arrangement of the interior space for the convenience of contractors and is made from available information. studioMYID assumes no responsibility for the accuracy of interior measurements. Fabricators, Contractors and others utilizing these plans in connection with this job are responsible for securing their own measurements. Plumbing and Electrical information indicated on these plans are generally for interior/kitchen design and are intended as a reference only. studioMYID is not responsible for the engineering thereof, or for any plumbing or electrical fittings, work, and/or connections unless otherwise specifically provided for in the plans and specifications. studioMYID assumes no responsibility for work done by contractors or for any changes made necessary by local building or health department codes, ordinances, structural conditions, or by the substitution or changes in interior/kitchen design shown on the plan. These plans and designs contained herein are the property of studioMYID, and may not be reproduced, used, reviewed or examined by anyone, either all or in part, without first securing the written permission of studioMYID.

"THESE PLANS ARE FULLY PROTECTED UNDER THE COPYRIGHT LAWS OF THE UNITED STATES OF AMERICA".

FILE
DRAWN
REVIEWED

ISSUE	DATE	BY
FOR BACKGROUND	09.11.17	PSC,JA

PLAN CHECK	DATE	BY
1 PLAN CK #1	06.13.18	PSC,JA,MY

burger lounge III LLC
1198 Roseville Parkway
Suite #135
Roseville, CA 95661

1 0039 0041

PROJECT NO.
SCALE AS NOTED
PRINTED
TITLE
RESTROOMS ENLARGED PLAN & ELEVATIONS

SHEET I-12.3

• INTERIOR DESIGN • CONCEPTING • BRANDING • INTERIOR DESIGN • CONCEPTING • BRANDING • INTERIOR DESIGN • CONCEPTING • BRANDING • INTERIOR DESIGN • CONCEPTING • BRANDING • INTERIOR DESIGN • CONCEPTING • BRANDING

HEAT PUMP SCHEDULE

ITEM	TYPE	MANUFACTURER	MODEL	ZONE	SEER	EER	COOLING	SEN. COOLING	HEAT IN	HEAT OUT	AFUE	E.S.P.	CFM	O.S.A. (CFM)	VOLTAGE	PHASE	MCA	MOCP	WEIGHT	REMARKS
RTU-1	PACKAGE GAS/ELECT.	LENNOX	LGA072H2BS2G	DINNG	-	9.0	72 MBH	57.6 MBH	78 MBH	62 MBH	80%	0.5 in wg	2400	550 (min.)	460	3	20	25	-	EXISTING 6 TON UNIT W/ ROOF CURB & SASD
RTU-2	PACKAGE GAS/ELECT.	CARRIER	48VLNC360606	SERV./KIT	14.3	12.0	31.3 MBH	25.3 MBH	60 MBH	48 MBH	82%	0.5 in wg	1200	240 (min.)	460	3	24.5	35	-	EXISTING 3 TON UNIT W/ ROOF CURB & SASD

FAN SCHEDULE

ITEM	TYPE	MANUFACTURER	MODEL	AREA SERVED	CFM	HP	VOLTAGE	PHASE	FLA	RPM	E.S.P.	WEIGHT	REMARKS
KEF-1	UPBLAST EXHAUST	CAPTIVE AIRE	DU180HFA	HOOD #1	2400	1.5	208	3	6.6	1210	1.5	174#	INTERLOCK W/ MUA-1 FACTORY ROOF CURB, GREASE CUP
KEF-2	UPBLAST EXHAUST	CAPTIVE AIRE	DU50HFA	HOOD #2	725	0.5	115	1	5.6	1368	1.0	76#	INTERLOCK W/ MUA-1 FACTORY ROOF CURB, GREASE CUP
EF-1	CEILING MOUNT EXHAUST	BROAN	QTXE110	MEN'S RR	110	--	120	1	0.3	--	0.1	13#	INTEGRAL BACKDRAFT DAMPER SWITCHED ON/OFF WITH LIGHTS
EF-2	CEILING MOUNT EXHAUST	BROAN	QTXE050	MOP SINK CL.	50	--	120	1	0.3	--	0.1	13#	INTEGRAL BACKDRAFT DAMPER SWITCHED ON/OFF WITH LIGHTS
MUA-1	MAKE-UP AIR	CAPTIVE AIRE	A2-D.250-G15	HOOD #1& 2	2600	2.0	208	3	6.1	880	0.5	986#	HEATER, EVAP. COOLING, FILTERED INTAKE, 20"h FAC. ROOF CURB

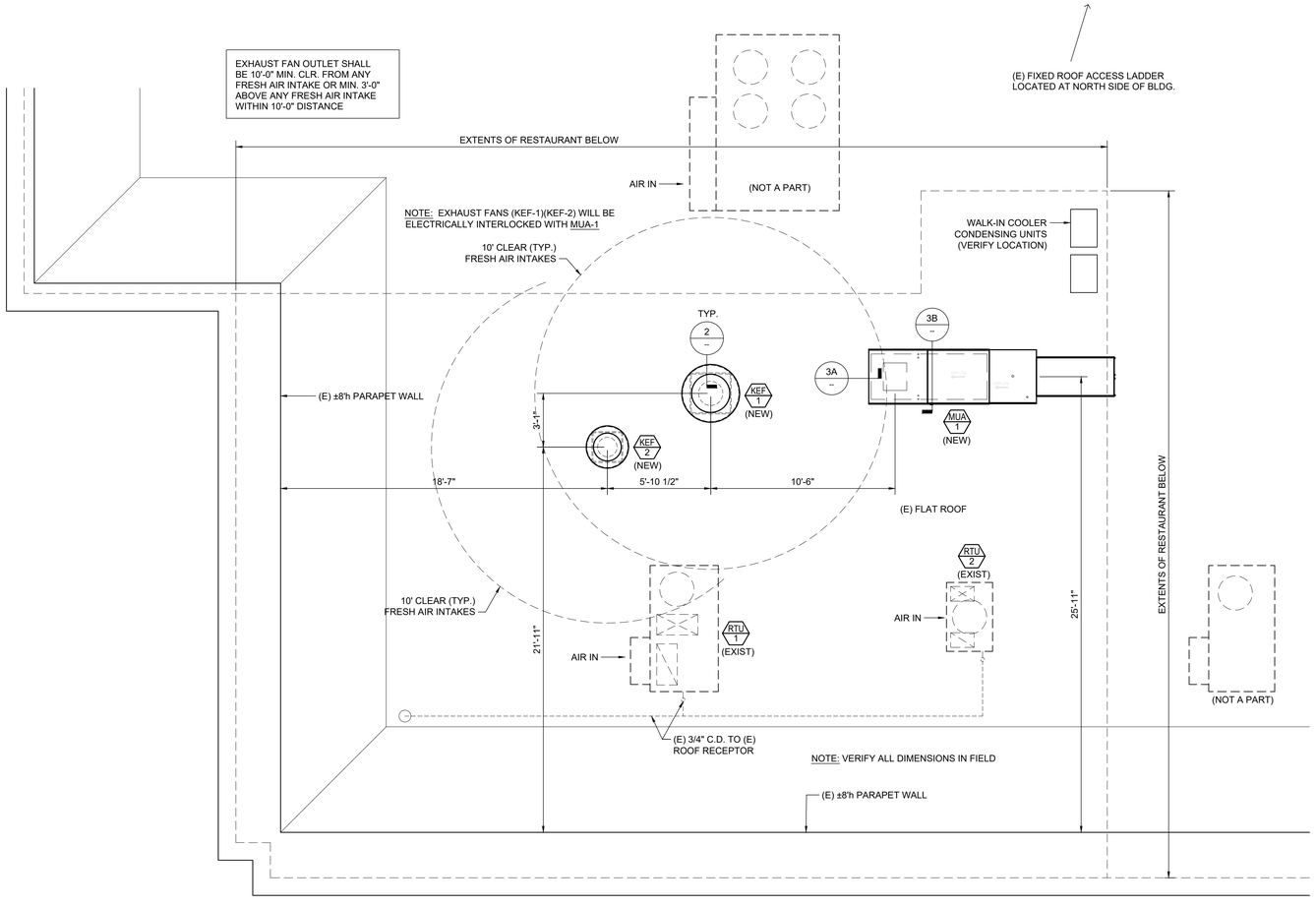

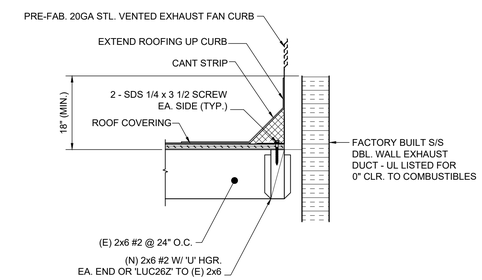

2 EXHAUST FAN CURB (TYP.)
N.T.S.

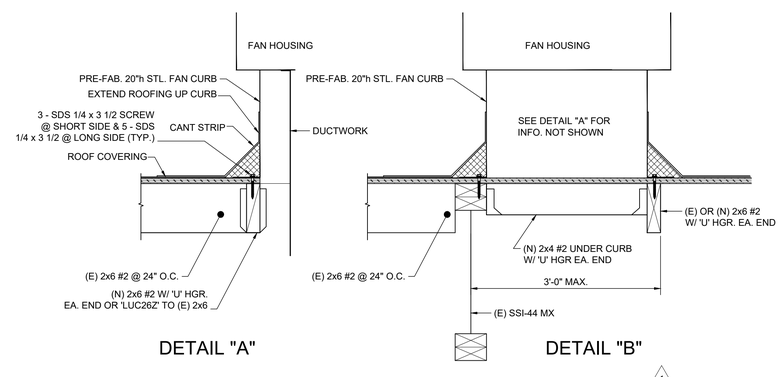

3 MAKE-UP AIR FAN CURB (TYP.)
N.T.S.

CITY STAMP

0' 2' 4'
SCALE: 1/4" = 1'-0"

1 MECHANICAL ROOF PLAN

SCALE: 1/4"=1'-0"

LICENSED ARCHITECT RAYMONDE BAKER
No. C28547
REN. 6-19
STATE OF CALIFORNIA

BAKER [b a] architecture
4080 CENTRE ST, STE #203
SAN DIEGO, CA 92103 TEL.
(619) 281-5937
www.bakerarchitecture.com

REVISION SCHEDULE

REV	DATE	BY	DESCRIPTION
1	05.29.18	--	BLDG. DEPT. PLAN CHECK
2			
3			
4			
5			

PROJECT # 17XXX

BURGER LOUNGE III LLC
FOUNTAINS AT ROSEVILLE
1198 ROSEVILLE PKWY. #135 - ROSEVILLE, CA 95678

DATE: 04/06/18

M1.0

THESE DRAWINGS AND SPECIFICATIONS ARE CONFIDENTIAL AND SHALL REMAIN THE SOLE PROPERTY OF BAKER ARCHITECTURE, WHICH IS THE OWNER OF COPYRIGHT IN THIS WORK. THEY SHALL NOT BE REPRODUCED IN WHOLE OR IN PART, SHARED WITH THIRD PARTIES OR USED IN ANY MANNER ON OTHER PROJECTS OR EXTENSIONS TO THIS PROJECT WITHOUT THE PRIOR WRITTEN CONSENT OF BAKER ARCHITECTURE.

EXHAUST HOOD SCHEDULE

MARK	TYPE	MFR. / MODEL	LENGTH	WIDTH	DUCT SIZE	EXHAUST	EXH. VELOCITY	SUPPLY PLENUM	EXHAUST CALCULATION	EXH./ MUA FAN
HOOD #1	1	CAPTIVE AIRE 4824ND-2	10'-0"	4'-0"	16"Ø	2,400 CFM	1,719 FPM	2,600 CFM	(MAX. COOKING TEMP. 600" F) U.L. LISTED - CALCULATION PER MFR.	KEF-1/MUA-1
HOOD #1	1	CAPTIVE AIRE 4824ND-2	3'-9"	4'-0"	8"Ø	725 CFM	2,077 FPM	--	(MAX. COOKING TEMP. 450" F) U.L. LISTED - CALCULATION PER MFR.	KEF-2/MUA-1

AIR BALANCE CALCULATION

UNIT NO.	SUPPLY CFM	RETURN CFM	O.S.A. CFM	EXHAUST CFM
RTU-1	2400	1850	550	--
RTU-2	1200	960	240	--
KEF-1	--	--	--	2400
KEF-2	--	--	--	725
EF-1	--	--	--	110
EF-2	--	--	--	50
MUA-1	--	--	2600	--
TOTAL	3,600	2,810	3,390	3,285

+105 CFM POSITIVE

DIFFUSER / GRILLE SCHEDULE

MARK	SIZE	QTY.	MFR. / MODEL OR APPROVED EQUAL
A	24"x24"	2	TITUS PAR - PERFORATED RETURN AIR (USE AS SUPPLY DIFFUSER NEAR EXHAUST HOODS)
B	24"x24"	2	TITUS PAS - SUPPLY AIR
C	12"x12"	1	TITUS PAS - SUPPLY AIR (GYP. BD. CEILING)
D	48"	2	TITUS ML-39, 2 x 1" SLOTS - 48" LENGTH (SUPPLY) TYPE 22 BORDER OR EQUAL PAINT TO MATCH CEILING
F	SIZE PER MFR.	7	TITUS US300FL OR EQUAL SUPPLY AIR DUCT MOUNTED DIFFUSER MOUNT @ 0° - 45° TO VERT. (V.I.F.)

NOTE: DIFFUSERS / GRILLES IN GYP. BOARD CEILINGS / SOFFITS TO BE PAINTED TO MATCH ADJACENT GYP. BOARD SURFACES (U.O.N.)

LEGEND

- RIGID DUCTING
- FLEX DUCTING
- SUPPLY AIR DUCT
- RETURN AIR DUCT
- EXHAUST AIR DUCT
- T — 7 DAY PROGRAMMABLE THERMOSTAT HONEYWELL #RTH7600D @ 48" A.F.F.
- MANUAL AIR DAMPER
- SD — DUCT MOUNTED SMOKE DETECTOR
- S — T-STAT REMOTE SENSOR
- U/C — UNDER CUT DOOR
- CFM — CUBIC FEET PER MINUTE
- SA — SUPPLY AIR
- RA — RETURN AIR
- OAS — OUTSIDE AIR
- MUA — MAKE-UP AIR
- EXIST. — EXISTING
- TYP. — TYPICAL
- A.F.F. — ABOVE FINISH FLOOR

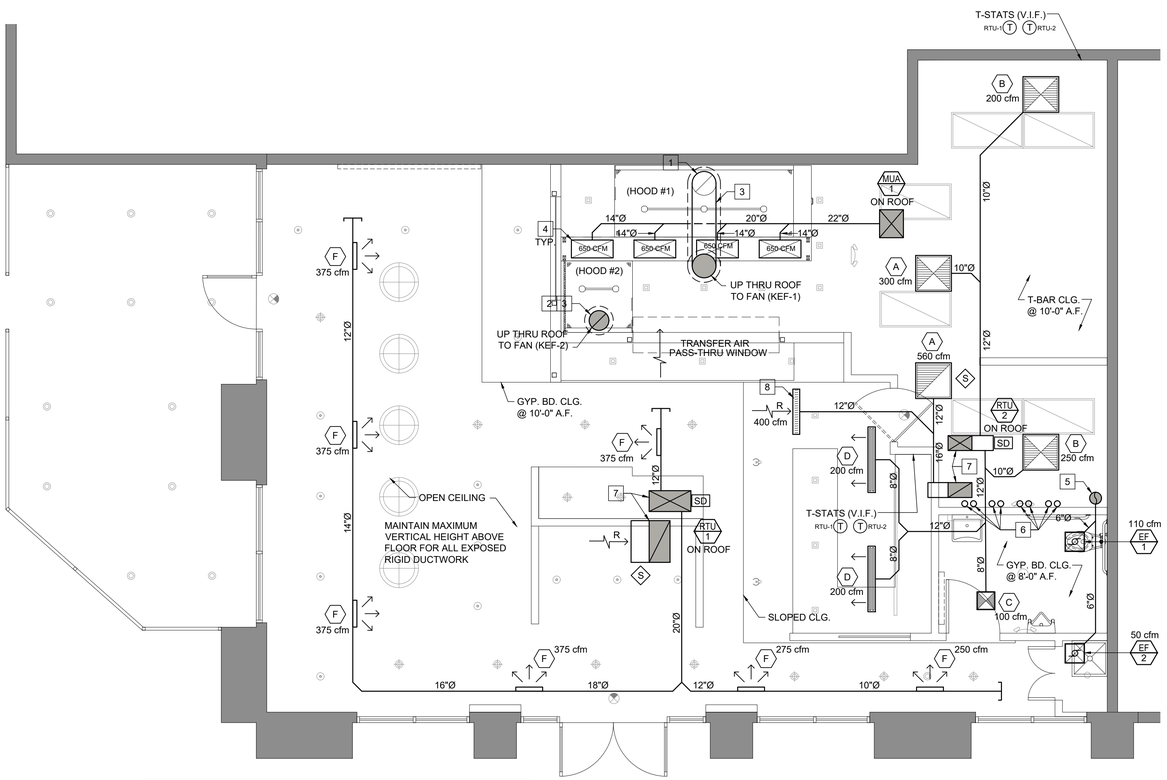

COORDINATE DIFFUSER LOCATIONS W/ LIGHTING LAYOUT - SEE SHT. A3 & I-7.0

DUCT SUPPORT TABLE

ALTERNATE SUPPORT FOR FACTORY MADE DUCTS
2009 UMC - TABLE 6-10

CLASS 1 DUCT MATERIAL	MINIMUM SUPPORT MATERIAL	MAXIMUM SUPPORT SPACING
RIGID ROUND FIBEROUS	NO. 26GA x 5/8" WIDE GALV. IRON STRAP	6 FEET ON CENTER
CORRUGATED METAL	NO. 18GA GALV. IRON WIRE	6 FEET ON CENTER
FLEXIBLE	NO. 26GA x 1 1/2" WIDE GALV. IRON STRAP	4 FEET ON CENTER

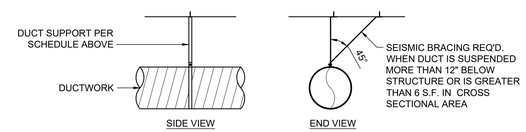

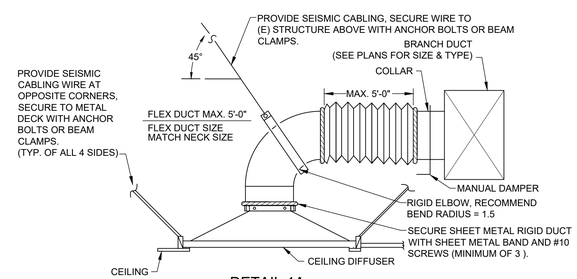

DETAIL 1A

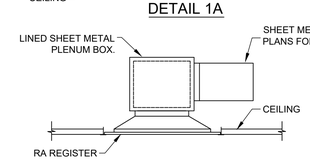

DETAIL 1B

TYPICAL DIFFUSER / GRILLE CONNECTION DETAIL

SCALE: N.T.S.

KEY NOTES:

1. 16"Ø EXHAUST DUCT COLLAR @ HOOD
2. 8"Ø EXHAUST DUCT COLLAR @ HOOD
3. CAPTIVE AIRE FACTORY BUILT, STAINLESS STEEL DOUBLE WALL EXHAUST DUCT (UL LISTED) - SIZED & DESIGNED BY MFR. - 1/16" MIN. SLOPE TOWARDS HOOD PER MFR. SPECS. CLEAN-OUTS PROVIDED AT ALL CHANGES OF DIRECTION - MECH. CONTRACTOR TO INSTALL PER ALL MFR'S. SPECIFICATIONS
4. DUCT COLLAR @ HOOD SUPPLY AIR PLENUM - SEE HOOD DWGS.
5. 8"Ø GALV. EXHAUST DUCT (RESTROOM / JAN. CL.) UP THRU ROOF W/ ROOF CAP & BIRD SCREEN
6. PVC VENTS (WATER HEATER) THRU ROOF PER MFR. SEE PLUMBING DWGS. FOR WATER HEATER SPECS. (VERIFY ROUTING IN FIELD)
7. LINED SUPPLY / RETURN PLENUMS DOWN THRU ROOF
8. RETURN AIR GRILL IN VERT. WALL ABOVE SLOPED CEILING (0.8 sf NFVA)

NOTES:

1. ALL MECHANICAL EQUIPMENT WILL BE U.L. LISTED & LABELED BY AN APPROVED TESTING AGENCY.
2. ALL DUCTS SHALL BE CONSTRUCTED, SEALED, INSULATED AND INSTALLED PER CMC CHAPTER 6,
3. SMOKE DETECTORS SHALL BE INSTALLED IN THE MAIN SUPPLY AIR DUCT OF AIR MOVING SYSTEMS GREATER THAN 2000 CFM. SECTION 609 CMC
4. MECHANICALLY OPERATED VENTILATION SYSTEMS SHALL BE CAPABLE OF SUPPLYING A MINIMUM OF 15 CFM OF OUTSIDE AIR PER OCCUPANT IN ALL PORTIONS OF BUILDING.
5. DOORS AND WINDOWS SHALL MEET THE MINIMUM INFILTRATION REQUIREMENTS PER SECTIONS 110.6 AND 110.7 E.E.S.
6. ALL PIPING AND DUCTWORK SHALL BE INSULATED CONSISTENT WITH THE REQUIREMENTS OF SECTIONS 120.3, 120.4 AND 120.7 TITLE 24 ENERGY STANDARDS AND CHAPTER 6 OF CMC.
7. ALL HVAC SYSTEMS SHALL MEET THE CONTROL REQUIREMENTS PER SECTION 110.2 AND 120.2 E.E.S.
8. ALL HVAC EQUIPMENT AND APPLIANCES SHALL MEET THE REQUIREMENTS PER SECTIONS 110.1, 110.3, 110.5, 120.1-120.4 TITLE 24 ENERGY STANDARDS
9. AT THE TIME OF ROUGH INSTALLATION AND DURING STORAGE ON THE CONSTRUCTION SITE UNTIL FINAL STARTUP OF THE HEATING, COOLING AND VENTILATING EQUIPMENT, ALL DUCT AND OTHER RELATED AIR DISTRIBUTION COMPONENT OPENINGS SHALL BE COVERED WITH TAPE, PLASTIC, SHEET METAL OR OTHER METHODS ACCEPTABLE TO THE ENFORCING AGENCY TO REDUCE THE AMOUNT OF DUST, WATER AND DEBRIS WHICH MAY ENTER THE SYSTEM.
10. IN MECHANICALLY VENTILATED BUILDINGS, REGULARLY OCCUPIED AREAS OF THE BUILDING SHALL BE PROVIDED WITH AIR FILTRATION MEDIA FOR OUTSIDE AND RETURN AIR THAT PROVIDES AT LEAST A MINIMUM EFFICIENCY REPORTING VALUE (MERV) OF 8. MERV 8 FILTERS SHALL BE INSTALLED PRIOR TO OCCUPANCY AND RECOMMENDATIONS FOR MAINTENANCE WITH FILTERS OF THE SAME VALUE SHALL BE INCLUDED IN THE OPERATION AND MAINTENANCE MANUAL (CALGREEN 5.504.5.3)
11. INSTALLATIONS OF HVAC, REFRIGERATION AND FIRE SUPPRESSION EQUIPMENT SHALL COMPLY WITH SECTIONS 5.508.1.1 AND 5.508.1.2. HVAC, REFRIGERATION AND FIRE SUPPRESSION EQUIPMENT SHALL NOT CONTAIN CHLOROFLUOROCARBONS (CFCs) AND SHALL NOT CONTAIN HALONS
12. IN ADDITION TO TESTING AND ADJUSTING, BEFORE A NEW SPACE CONDITIONING SYSTEM SERVING A BUILDING OR SPACE IS OPERATED FOR NORMAL USE, BALANCE THE SYSTEM IN ACCORDANCE WITH THE PROCEDURES DEFINED BY THE TESTING ADJUSTING AND BALANCING BUREAU NATIONAL STANDARDS; THE NATIONAL ENVIRONMENTAL BALANCING BUREAU PROCEDURAL STANDARDS OR ASSOCIATED AIR BALANCE COUNCIL NATIONAL STANDARDS.
13. PROVIDE THE BUILDING OWNER OR REPRESENTATIVE WITH DETAILED OPERATING AND MAINTENANCE INSTRUCTIONS AND COPIES OF GUARRANTIES/WARRANTIES FOR EACH SYSTEM. O&M INSTRUCTIONS SHALL BE CONSISTENT WITH OSHA REQUIREMENTS IN CCR, TITLE 8, SECTION 5142 AND OTHER RELATED REGULATIONS.
14. ALL ENVELOPE AND MECHANICAL CERTIFICATE OF ACCEPTANCE FORMS AND RELATED ACCEPTANCE DOCUMENTS SHALL BE SUBMITTED TO THE FIELD INSPECTOR DURING CONSTRUCTION. CERTIFICATE OF OCCUPANCY WILL NOT BE ISSUED UNTIL THESE FORMS ARE REVIEWED AND APPROVED.
15. INSULATION MATERIAL SHALL MEET THE CALIFORNIA QUALITY STANDARD PER SECTION 110.8 ENERGY EFFICIENCY STANDARDS (E.E.S.)
16. DUCT MATERIAL & GAUGE FOR TYPE II HOOD SHALL COMPLY WITH CMC CHAPTER 6
17. FACTORY MADE AIR DUCTS, CONNECTORS & FLEXIBLE AIR DUCTS SHALL BE NO MORE THAN 5'-0" IN LENGTH & SHALL NOT BE USED IN LIEU OF RIGID ELBOWS OR FITTINGS. FLEXIBLE AIR DUCTS SHALL NOT PENETRATE WALLS, FLOORS OR CEILINGS.

CITY STAMP

0' 2' 4'
SCALE: 1/4" = 1'-0"

1 MECHANICAL DUCTWORK PLAN

SCALE: 1/4"=1'-0"

LICENSED ARCHITECT RICHARD BAKER
No. C28547
REN. 6-19
STATE OF CALIFORNIA

BAKER [b] [a] architecture
4080 CENTRE ST, STE #203
SAN DIEGO, CA 92103 TEL.
(619) 281-5937
www.bakerarchitecture.com

THESE DRAWINGS AND SPECIFICATIONS ARE CONFIDENTIAL AND SHALL REMAIN THE SOLE PROPERTY OF BAKER ARCHITECTURE, WHICH IS THE OWNER OF COPYRIGHT IN THIS WORK. THEY SHALL NOT BE REPRODUCED IN WHOLE OR IN PART, SHARED WITH THIRD PARTIES OR USED IN ANY MANNER ON OTHER PROJECTS OR EXTENSIONS TO THIS PROJECT WITHOUT THE PRIOR WRITTEN CONSENT OF BAKER ARCHITECTURE.

REVISION SCHEDULE

REV	DATE	BY	DESCRIPTION
1	05.29.18	--	BLDG. DEPT. PLAN CHECK
2			
3			
4			
5			

PROJECT # 17XXX

BURGER LOUNGE III LLC
FOUNTAINS AT ROSEVILLE
1198 ROSEVILLE PKWY. #135 - ROSEVILLE, CA 95678

DATE: 04/06/18

M2.0

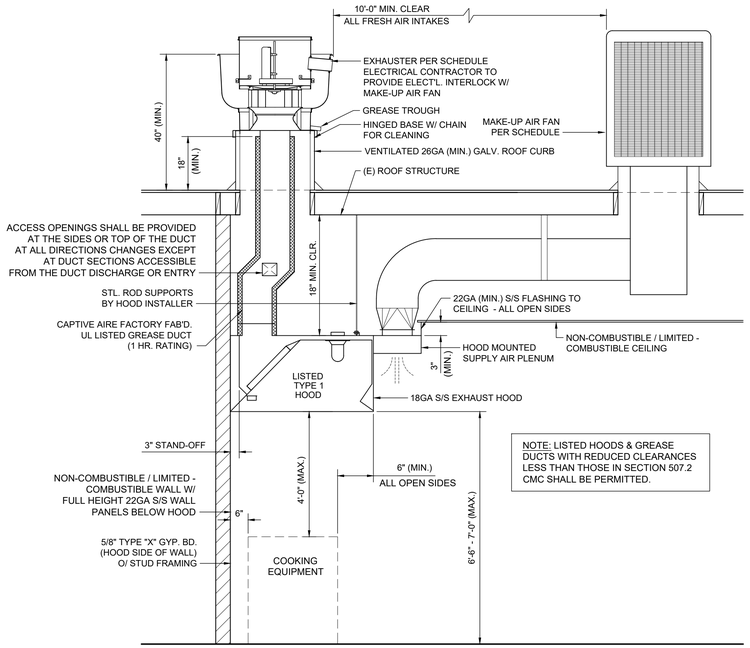

TYICAL INSTALLATION - CONDITIONS MAY VARY PER JOBSITE

2 TYPICAL TYPE 1 EXHAUST HOOD SECTION
SCALE: N.T.S.

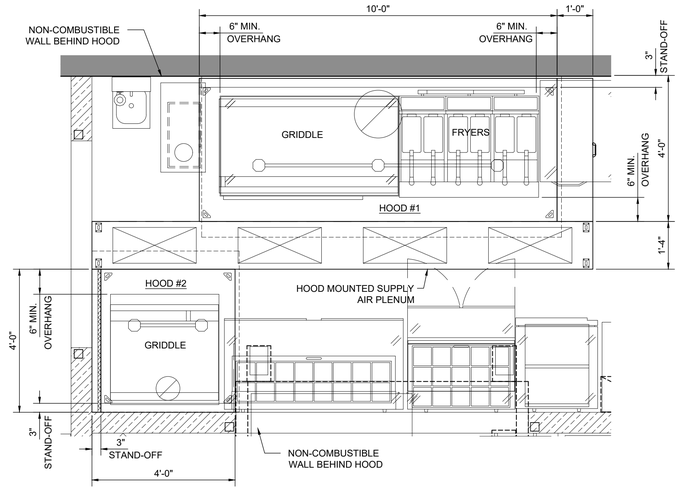

NOTE: STAINLESS STEEL FLASHING IN INCLUDED IN THE HOOD PACKAGE & INSTALLED BY G.C.

1 EXHAUST HOODS #1 & #2 - PLAN VIEW
SCALE: 1/2"=1'-0"

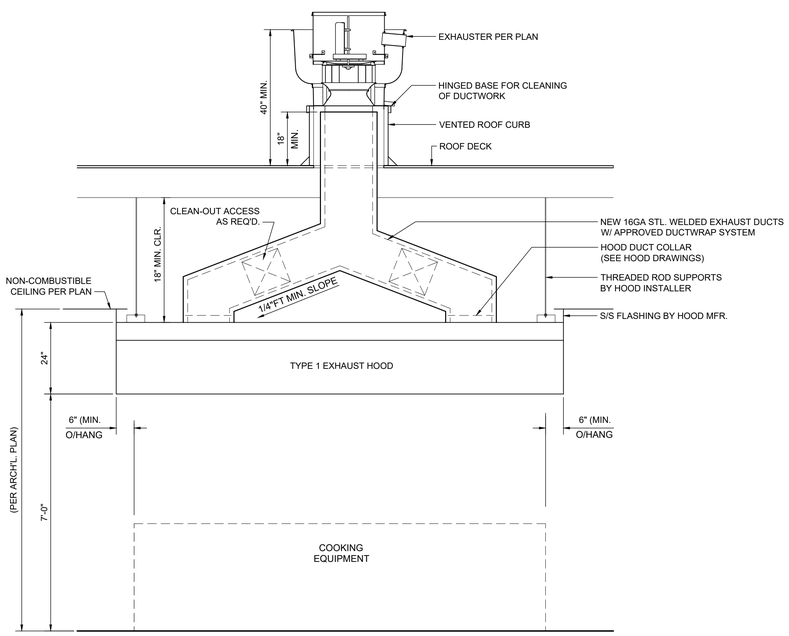

3 TYPICAL TYPE 1 EXHAUST HOOD ELEVATION
SCALE: N.T.S.

EXHAUST HOOD NOTES:

1. 6" MIN. OVERHANG FROM OUTER EDGE OF COOKING DEVICE TO INNER EDGE OF GREASE GUTTER
2. 7'-0" MAX. HEIGHT TO LOWER EDGE OF HOOD FROM FLOOR
3. 48" MAX. HEIGHT TO LOWER EDGE OF HOOD FROM TOP OF COOKING DEVICE
4. HOOD CONSTRUCTION TO BE 22 GA. METAL (MIN.) DUCT CONSTRUCTION TO BE 16 GA. METAL (MIN.) W/ WELDED SEAMS
5. TURBINE UPDRAFT EXHAUST FANS SHALL BE HINGED AND CHAINED FOR CLEANING VERTICAL DUCT
6. DUCTS & PLENUMS TO BE INSTALLED PER U.M.C. SEC. 507
7. EXHAUSTER & MAKE-UP AIR UNIT TO BE ELECTRICALLY INTERLOCKED PER U.M.C. SEC. 402.4
8. THE FIRE EXTINGUISHING SYSTEM (WITH MANUAL RESET) SHALL BE INTERCONNECTED TO THE FUEL OR CURRENT SUPPLY SO THAT THE FUEL OR CURRENT IS AUTOMATICALLY SHUT OFF TO ALL EQUIPMENT UNDER THE HOOD WHEN THE SYSTEM IS ACTUATED
9. EXHAUST OUTLET TO BE LOCATED 10'-0" (MIN) AWAY FROM ANY ADJACENT BUILDING PROPERTY LINE OR ANY FRESH AIR INTAKE U.M.C. SEC 2002.01
10. EXHAUST HOOD, GREASE REMOVAL DEVICES & DUCTS SHALL HAVE A MINIMUM CLEARANCE OF 18" TO COMBUSTIBLE MATERIALS, 3" MINIMUM CLEARANCE TO LIMITED COMBUSTIBLE MATERIALS - CMC 507.2
11. OPENINGS SHALL BE PROVIDED AT THE SIDES OR TOP OF THE DUCT, WHICHEVER IS MORE ACCESSIBLE AND AT CHANGES OF DIRECTION. OPENINGS SHALL BE PROTECTED BY APPROVED ACCESS PANELS. OPENING SHALL NOT BE LESS THAN 1 1/2" FROM OUTSIDE EDGES OR WELDED SEAMS OF NON-LISTED DUCT.
12. ACCESS PANELS SHALL BE OF THE SAME MATERIAL & THICKNESS OF THE DUCT & SHALL BE SEALED OR GASKETED TO WITHSTAND TEMPERATURES OF 1500° F & SHALL BE GREASE TIGHT. FASTENERS USED TO SECURE THE ACCESS PANEL SHALL BE CARBON STEEL OR STAINLESS STELL & SHALL NOT PENETRATE THE DUCT .
13. FIRE EXTINGUISHING EQUIPMENT SHALL BE PROVIDED FOR THE PROTECTION OF GREASE REMOVAL EQUIPMENT, HOODS, PLENUMS, DUCT SYSTEMS & COOKING EQUIPMENT THAT PRODUCES GREASE LADEN VAPORS.
14. FIRE EXTINGUISHING EQUIPMENT SHALL INCLUDE BOTH AUTOMATIC SYSTEMS AS PRIMARY PROTETION AS WELL AS A PORTABLE TYPE 'K' FIRE EXTINGUISHER AS SECONDARY BACKUP.

CITY STAMP

THESE DRAWINGS AND SPECIFICATIONS ARE CONFIDENTIAL AND SHALL REMAIN THE SOLE PROPERTY OF BAKER ARCHITECTURE, WHICH IS THE OWNER OF COPYRIGHT IN THIS WORK. THEY SHALL NOT BE REPRODUCED IN WHOLE OR IN PART, SHARED WITH THIRD PARTIES OR USED IN ANY MANNER ON OTHER PROJECTS OR EXTENSIONS TO THIS PROJECT WITHOUT THE PRIOR WRITTEN CONSENT OF BAKER ARCHITECTURE.

LICENSED ARCHITECT
KAZEROUNI BAKER
No. C28547
REN. 6-19
STATE OF CALIFORNIA

BAKER [b a] architecture
4080 CENTRE ST, STE #203
SAN DIEGO, CA 92103 TEL.
(619) 281-5937
www.bakerarchitecture.com

REVISION SCHEDULE

REV	DATE	BY	DESCRIPTION
1	05.29.18	--	BLDG. DEPT. PLAN CHECK
2			
3			
4			
5			

PROJECT # 17XXX

BURGER LOUNGE III LLC
FOUNTAINS AT ROSEVILLE
1198 ROSEVILLE PKWY. #135 - ROSEVILLE, CA 95678

DATE: 04/06/18

M3.0

HOOD INFORMATION – Job#3348453

HOOD NO.	TAG	MODEL	LENGTH	MAX. COOKING TEMP.	EXHAUST PLENUM								TOTAL SUPPLY CFM	HOOD CONSTRUCTION	HOOD CONFIG.	
					TOTAL EXH. CFM	RISER(S)									END TO END	ROW
						WIDTH	LENG.	HEIGHT	DIA.	CFM	VEL.	S.P.				
1		4824 ND-2	10' 0"	600 Deg.	2400			4"	16"	2400	1719	-0.839"	0	430 SS Where Exposed	ALONE	ALONE
2		4824 ND-2	3' 9"	450 Deg.	725			4"	8"	725	2077	-0.545"	0	430 SS Where Exposed	ALONE	ALONE
3		166 MISC-PSP	14' 0"	300 Deg.	0								2600	430 SS Where Exposed	ALONE	ALONE

PATENT NUMBERS

AC-PSP (United States) - US Patent 7963830 B2
AC-PSP Wall (Canada) - CA Patent 2820509
AC-PSP Island (Canada) - CA Patent 2520330
Exhaust Hoods ND-2/BD-2/SND-2 (Canada) - CA Patent 2520435 C

HOOD INFORMATION

HOOD NO.	TAG	FILTER(S)					LIGHT(S)			UTILITY CABINET(S)						FIRE SYSTEM PIPING	HOOD HANGING WGHT
		TYPE	QTY.	HEIGHT	LENGTH	EFFICIENCY @ 7 MICRONS	QTY.	TYPE	WIRE GUARD	LOCATION	SIZE	FIRE SYSTEM		ELECTRICAL	SWITCHES		
												TYPE	SIZE	MODEL #	QUANTITY		
1		Captrate Solo Filter	7	20"	16"	85% See Filter Spec.	3	L55 Series E26	NO	Right	12"x48"x24"			DCV-2111	1 Light 1 Fan	YES	561 LBS
2		Captrate Solo Filter	2	20"	20"	85% See Filter Spec.	2	L55 Series E26	NO							YES	232 LBS
3							0									NO	186 LBS

HOOD OPTIONS

HOOD NO.	TAG	OPTION
1		FIELD WRAPPER 18.00" High Front, Left, Right
		BACKSPLASH 80.00" High X 132.00" Long 430 SS Vertical
		LEFT QUARTER END PANEL 23" Top Width, 0" Bottom Width, 23" High 430 SS
2		FIELD WRAPPER 18.00" High Front, Left
		BACKSPLASH 80.00" High X 48.00" Long 430 SS Vertical
		RIGHT END STANDOFF 3" Wide 48" Long Insulated
		RIGHT SIDESPLASH 80.00" High X 48.00" Long 430 SS Vertical
		LEFT QUARTER END PANEL 23" Top Width, 0" Bottom Width, 23" High 430 SS

PERFORATED SUPPLY PLENUM(S)

HOOD NO.	TAG	POS.	LENGTH	WIDTH	HEIGHT	TYPE	RISER(S)				
							WIDTH	LENG.	DIA.	CFM	S.P.
3		Front	168"	16"	6"	MUA	12"	28"		650	0.161"
						MUA	12"	28"		650	0.161"
						MUA	12"	28"		650	0.161"
						MUA	12"	28"		650	0.161"

8

GREASE DUCT & CHIMNEY SPECIFICATIONS:
PROVIDE GREASE DUCT EQUAL TO CAPTIVEAIRE SYSTEMS MODEL "DW" ROUND 20 GAUGE 430 STAINLESS STEEL DUCTWORK. MODEL "DW" IS LISTED TO UL-1978 AND IS INSTALLED USING "V" CLAMP LOCKING CONNECTIONS SEALED WITH 3M FIRE BARRIER 2000 PLUS. MODEL "DW" DOES NOT REQUIRE WELDING PROVIDING IT HAS BEEN INSTALLED PER THE MANUFACTURES INSTALLATION GUIDE.
PROVIDE RATED ACCESS DOORS AT EVERY CHANGE IN DIRECTION AND EVERY 12' ON CENTER. PER MANUFACTURES LISTING MODEL "DW" HORIZONTAL RUNS LESS THAN 75 FT. CAN BE SLOPED 1/16" PER 12", HORIZONTAL RUNS MORE THAN 75 FT. CAN BE SLOPED 3/16" PER 12". DUCT SHOULD BE SLOPED AS MUCH AS POSSIBLE TO REDUCE THE CHANCE OF GREASE ACCUMULATION IN HORIZONTAL RUNS.

IF THE DUCT OR CHIMNEY IS WITHIN 18 INCHES OF COMBUSTIBLE MATERIAL, PROVIDE UL-2221 OR UL-103 HT LISTED DOUBLE WALL GREASE DUCT OR DOUBLE WALL CHIMNEY EQUAL TO CAPTIVEAIRE SYSTEMS MODEL "DW- 2R, 2R TYPE HT, 3R, OR 3Z" ROUND 20 GAUGE 430 STAINLESS INNER DUCT INSULATED WITH A 24 GAUGE 430 STAINLESS OUTER SHELL.

CAPTIVEAIRE SYSTEMS RECOMMENDS THE USE OF LISTED, PRE-FABRICATED ROUND GREASE EXHAUST DUCT TO REDUCE STATIC PRESSURE IN THE SYSTEM, MINIMIZE INSTALLATION AND INSPECTION TIMES, AND ENSURE DUCT IS LIQUID TIGHT

HVAC DISTRIBUTION NOTE

HIGH VELOCITY DIFFUSERS OR HVAC RETURNS SHOULD NOT BE PLACED WITHIN TEN (10) FEET OF THE EXHAUST HOOD. PERFORATED DIFFUSERS ARE RECOMMENDED.

VERIFY CEILING HEIGHT

___' - ___"

HEIGHT REQUIRED TO VERIFY THAT HOOD FITS SPACE AND TO SIZE THE ENCLOSURE PANELS

CUSTOMER APPROVAL TO MANUFACTURE:

Approved as Noted ☐
Approved with NO Exception Taken ☐
Revise and Resubmit ☐
SIGNATURE _____
Your Title _____ Date _____ _____

SPECIFICATION: CAPTRATE• GREASE-STOP• SOLO FILTER

THE CAPTRATE GREASE-STOP SOLO FILTER IS A SINGLE-STAGE FILTER FEATURING A UNIQUE S-BAFFLE DESIGN IN CONJUNCTION WITH A SLOTTED REAR BAFFLE DESIGN, TO DELIVER EXCEPTIONAL FILTRATION EFFICIENCY.

FILTER IS STAINLESS STEEL CONSTRUCTION, AND SIZED TO FIT INTO STANDARD 2-INCH DEEP HOOD CHANNELS(S).

UNITS SHALL INCLUDE STAINLESS STEEL HANDLES AND A FASTENING DEVICE TO SECURE THE TWO COMPONENTS WHEN ASSEMBLED.

GREASE EXTRACTION EFFICIENCY PERFORMANCE SHALL REMOVE AT LEAST 75% OF GREASE PARTICLES FIVE MICRONS IN SIZE, AND 85% GREASE PARTICLES SEVEN MICRONS IN SIZE AND LARGER, WITH A CORRESPONDING PRESSURE DROP NOT TO EXCEED 1.0 INCHES OF WATER GAUGE.

THE CAPTRATE GREASE-STOP SOLO WAS TESTED TO ASTM STANDARD ASTM F2519-05.

EFFICIENCY VS. PARTICLE DIAMETER

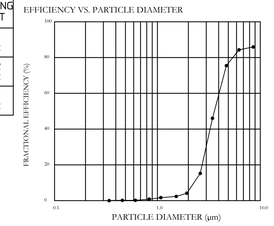

PRESSURE DROP VS. FLOW RATE

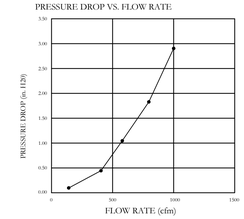

CAPTRATE FILTERS ARE BUILT IN COMPLIANCE WITH:
NFPA #96
NSF STANDARD #2
UL STANDARD #1046
INT. MECH. CODE (IMC)
ULC-S649

REVISIONS

DESCRIPTION	DATE:
△	
△	
△	
△	

CAPTIVEAIRE
www.captiveaire.com
San Diego Office
, San Diego, CA. 92117 PHONE: (858) 273-5084 FAX: (919) 747-5615 EMAIL: reg96@captiveaire.com

BAKER [b] [a] architecture
4080 CENTRE ST, STE #203
SAN DIEGO, CA 92103 TEL: (619) 281-5937
www.bakerarchitecture.com

LICENSED ARCHITECT KASPERSKE BRADFORD BAKER No. C28547 REN. 6-19 STATE OF CALIFORNIA

REVISION SCHEDULE			
REV	DATE	BY	DESCRIPTION
△	05.29.18	--	BLDG. DEPT. PLAN CHECK

PROJECT # 17XXX

Burger Lounge - Roseville
1198 Roseville Parkway #135,
ROSEVILLE, CA, 95661

DATE: 3/22/2018
DWG.#: 3348453
DRAWN BY: mwasiluk
SCALE: 3/4" = 1'-0"
MASTER DRAWING
SHEET NO. 1
CITY STAMP

BURGER LOUNGE III LLC
FOUNTAINS AT ROSEVILLE
1198 ROSEVILLE PKWY. #135 - ROSEVILLE, CA 95678

DATE: 04/06/18

M4.0

THESE DRAWINGS AND SPECIFICATIONS ARE CONFIDENTIAL AND SHALL REMAIN THE SOLE PROPERTY OF BAKER ARCHITECTURE, WHICH IS THE OWNER OF COPYRIGHT IN THIS WORK. THEY SHALL NOT BE REPRODUCED IN WHOLE OR IN PART, SHARED WITH THIRD PARTIES OR USED IN ANY MANNER ON OTHER PROJECTS OR EXTENSIONS TO THIS PROJECT WITHOUT THE PRIOR WRITTEN CONSENT OF BAKER ARCHITECTURE.

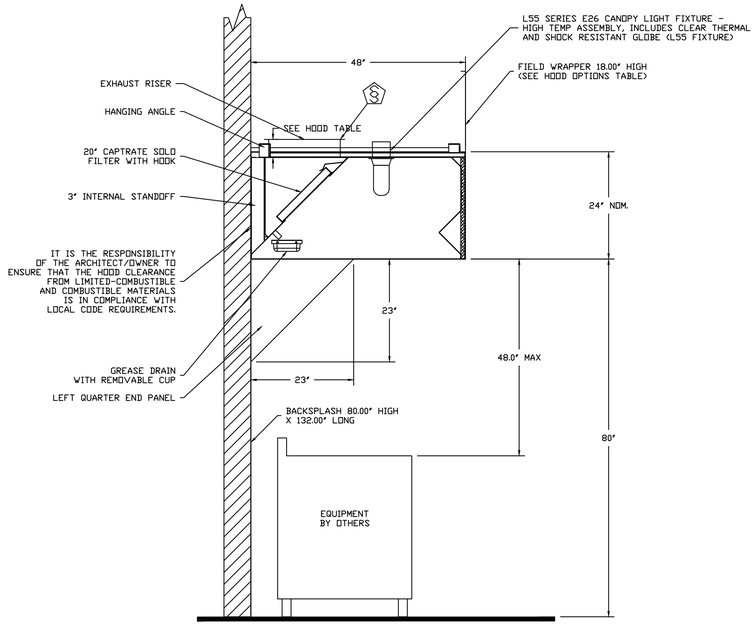

SECTION VIEW – MODEL 4824ND-2
HOOD – #1

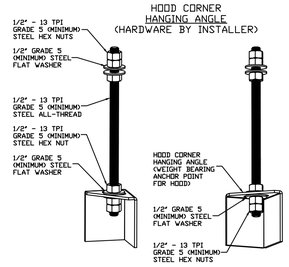

ASSEMBLY INSTRUCTIONS

HANGING ANGLE MUST BE SUPPORTED WITH 1/2" - 13 TPI GRADE 5 (MINIMUM) ALL-THREAD. SANDWICH HANGING ANGLES AND CEILING ANCHOR POINTS WITH 1/2" GRADE 5 (MINIMUM) STEEL FLAT WASHERS AND 1/2" - 13 TPI GRADE 5 (MINIMUM) HEX NUTS AS SHOWN. MUST USE DOUBLED HEX NUT CONFIGURATION BENEATH HOOD HANGING ANGLES AND ABOVE CEILING ANCHORS. MAINTAIN 1/4" OF EXPOSED THREADS BENEATH BOTTOM HEX NUT. TORQUE ALL HEX NUTS TO 57 FT-LBS.

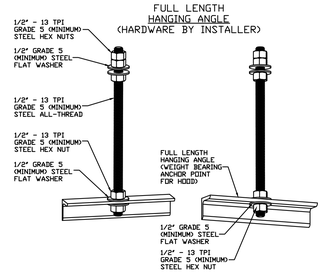

ASSEMBLY INSTRUCTIONS

HANGING ANGLE MUST BE SUPPORTED WITH 1/2" - 13 TPI GRADE 5 (MINIMUM) ALL-THREAD. SANDWICH HANGING ANGLES AND CEILING ANCHOR POINTS WITH 1/2" GRADE 5 (MINIMUM) STEEL FLAT WASHERS AND 1/2" - 13 TPI GRADE 5 (MINIMUM) HEX NUTS AS SHOWN. MUST USE DOUBLED HEX NUT CONFIGURATION ABOVE CEILING ANCHORS. SINGLE HEX NUT BENEATH HANGING ANGLE IS ACCEPTABLE FOR FULL LENGTH HANGING ANGLES. MAINTAIN 1/4" OF EXPOSED THREADS BENEATH BOTTOM HEX NUT. TORQUE ALL HEX NUTS TO 57 FT-LBS.

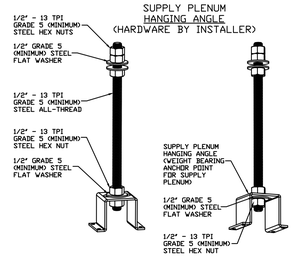

ASSEMBLY INSTRUCTIONS

HANGING ANGLE MUST BE SUPPORTED WITH 1/2" - 13 TPI GRADE 5 (MINIMUM) ALL-THREAD. SANDWICH HANGING ANGLES AND CEILING ANCHOR POINTS WITH 1/2" GRADE 5 (MINIMUM) STEEL FLAT WASHERS AND 1/2" - 13 TPI GRADE 5 (MINIMUM) HEX NUTS AS SHOWN. MUST USE DOUBLED HEX NUT CONFIGURATION ABOVE CEILING ANCHORS. SINGLE HEX NUT BENEATH HANGING ANGLE IS ACCEPTABLE FOR PSP HANGING ANGLES. MAINTAIN 1/4" OF EXPOSED THREADS BENEATH BOTTOM HEX NUT. TORQUE ALL HEX NUTS TO 57 FT-LBS.

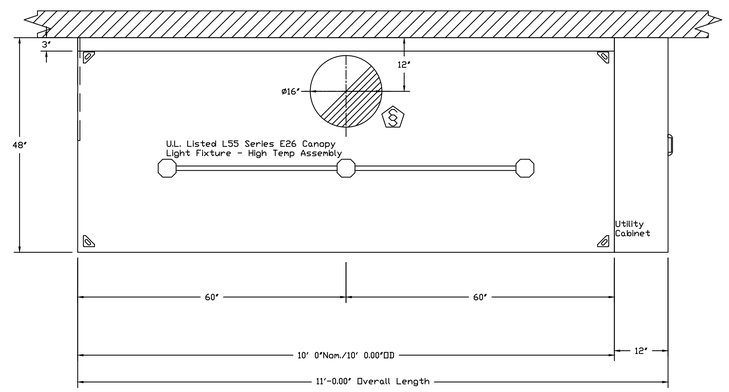

PLAN VIEW – Hood #1
10' 0.00" LONG 4824ND-2

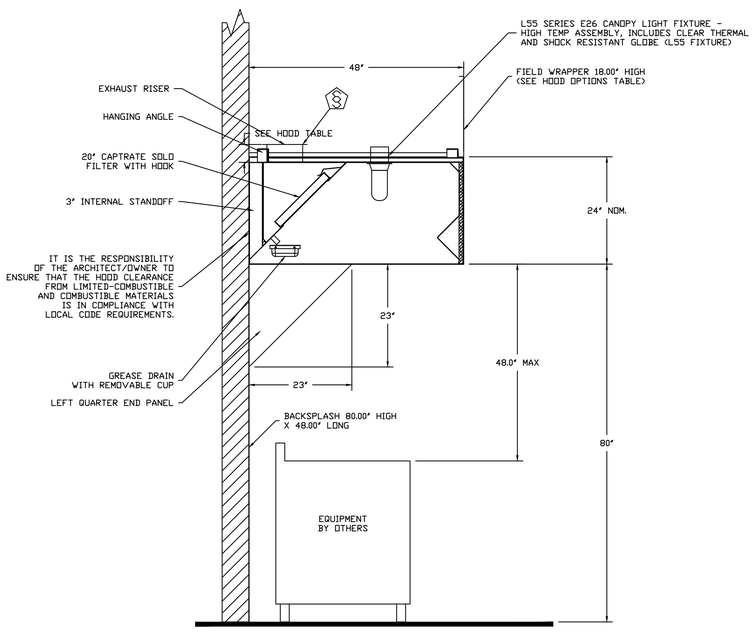

SECTION VIEW – MODEL 4824ND-2
HOOD – #2

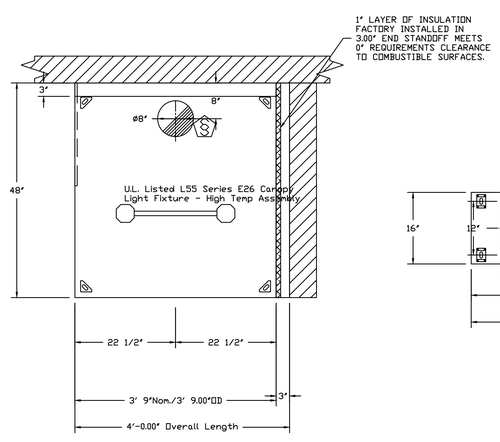

PLAN VIEW – Hood #2
3' 9.00" LONG 4824ND-2

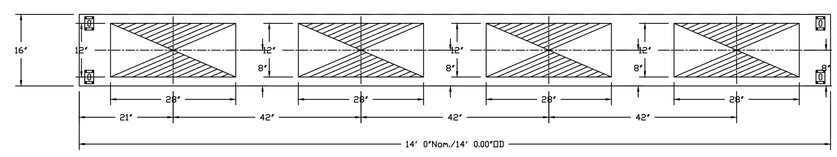

PLAN VIEW – Hood #3
14' 0.00" LONG 166MISC-PSP

REVISIONS

DESCRIPTION	DATE:

CAPTIVEAIRE
www.captiveaire.com
San Diego Office
, San Diego, CA, 92117 PHONE: (858) 273-5084 FAX: (919) 747-5615 EMAIL: regb96@captiveaire.com

Burger Lounge - Roseville
1198 Roseville Parkway #135,
ROSEVILLE, CA, 95661

DATE: 3/22/2018

DWG.#: 3348453

DRAWN BY: mwasiluk

SCALE: 3/4" = 1'-0"

MASTER DRAWING

SHEET NO. 2

CITY STAMP

LICENSED ARCHITECT
KASPERSKE BAKER
No. C28547
REN. 6-19
STATE OF CALIFORNIA
BAKER [b] [a] architecture
4080 CENTRE ST, STE #203
SAN DIEGO, CA 92103 TEL.
(619) 281-5937
www.bakerarchitecture.com

REVISION SCHEDULE			
REV	DATE	BY	DESCRIPTION
△	05.29.18	--	BLDG. DEPT. PLAN CHECK
△			
△			
△			
△			

PROJECT # 17XXX

BURGER LOUNGE III LLC
FOUNTAINS AT ROSEVILLE
1198 ROSEVILLE PKWY. #135 - ROSEVILLE, CA 95678

DATE: 04/06/18

M4.1

THESE DRAWINGS AND SPECIFICATIONS ARE CONFIDENTIAL AND SHALL REMAIN THE SOLE PROPERTY OF BAKER ARCHITECTURE, WHICH IS THE OWNER OF COPYRIGHT IN THIS WORK. THEY SHALL NOT BE REPRODUCED IN WHOLE OR IN PART, SHARED WITH THIRD PARTIES OR USED IN ANY MANNER ON OTHER PROJECTS OR EXTENSIONS TO THIS PROJECT WITHOUT THE PRIOR WRITTEN CONSENT OF BAKER ARCHITECTURE.

Fire System Information – Job#3348453

FIRE SYSTEM NO.	Tag	TYPE	SIZE	FLOW POINTS	INSTALLATION	
					SYSTEM	LOCATION ON HOOD
1		Ansul R102	3.0/3.0	16	Uninstalled	N/A

GAS VALVE(S)

FIRE SYSTEM NO.	TAG	TYPE	SIZE	SUPPLIED BY
1		Mechanical	2.000	CaptiveAire Systems

Fire System Parts List Key

FIRE SYSTEM NO.	TAG	KEY NUMBER - PART DESCRIPTION	QTY. BY FACTORY	QTY. BY DIST.
1		0 - 0 - 43-15733 AIR CYLINDER ASSEMBLY - Air Cylinder and Tubing for Mechanical Gas Valves (Ansul Part #15733)	1	0
		0 - 0 - Tank Strap Tank Strap - used for ANSUL Tanks	2	0
		0 - 0 - UCTANKBRACKET Tank Bracket for fire system tank installation in utility cabinets	2	0
		1 - 1 - AT - 3.0 TANK(#1B) - 3.0 Gallon SS Tank (for use with Automan Release, Actuator, or SS Enclosure (UL/ULC)) Macola # 01-429862	2	0
		3 - 3 - ANS-OEM REGULATED RELEASE - Ansul Regulated Mechanical Release/Bracket Assembly, OEM, R-102, Cartridge Detection Included, Ansul Part # 79493	1	0
		5 - 5 - LIQ-3.0 AGENT - Ansulex Low PH Wet Chemical Agent, 3 Gallon (UL) 79372	0	2
		9 - 9 - 101-30 CARTRIDGE - Carbon Dioxide, 101-30, Cartridge (R-102) 19-15851	0	1
		10 - 10 - TLINK LINK - Test Link (1 test link) Ansul Part # 24916, Macola # 20-24916	0	1
		11 - 11 - MICRO-SDA MICROSWITCH KIT- Includes 2 switches and Mounting Hardware. Single Dual Electric Switch, One Standard Switch, One Alarm Duty Switch Ansul Part # 437155, Macola # 08-437155	1	0
		12 - 12 - HOSE HOSE - Rubber Hose	1	0
		27 - 27 - QPSA-1/2 PULLEY SEAL - 1/2" Hood Seal (UL) Ansul Part # 423253, Macola # 32-79768	5	0
		34 - 34 - RPS-A REMOTE PULL STATION - Red composite (without wire rope) 434618 (Old Macola #06-4835)	1	0
		35 - 35 - PE-LT PULLEY ELBOW - Low Temp. Pulley Elbow, Set Screw Type Ansul Part # 415670, Macola # 11-415671	5	0
		36 - 36 - PE-HT PULLEY ELBOW - High Temp Pulley Elbow, Compression Type, Ansul Part # 423251, Macola # 10-45771	4	0
		ADDITIONAL PARTS TO BE DETERMINED…		

REVISIONS

DESCRIPTION	DATE:
△	
△	
△	
△	

CAPTIVEAIRE
www.captiveaire.com
San Diego Office
, San Diego, CA. 92117 PHONE: (858) 273-5084 FAX: (919) 747-5615 EMAIL: regi96@captiveaire.com

Burger Lounge - Roseville
1198 Roseville Parkway #135,
ROSEVILLE, CA, 95661

DATE: 3/22/2018

DWG.#: 3348453

DRAWN BY: mwasiluk

SCALE: 3/4" = 1'-0"

MASTER DRAWING

SHEET NO. 3

CITY STAMP

LICENSED ARCHITECT
KASEY DOUG BAKER
No. C28547
REN. 6-19
STATE OF CALIFORNIA

BAKER [b] [a] architecture
4080 CENTRE ST, STE #203
SAN DIEGO, CA 92103 TEL.
(619) 281-5937
www.bakerarchitecture.com

REVISION SCHEDULE

REV	DATE	BY	DESCRIPTION
△	05.29.18	--	BLDG. DEPT. PLAN CHECK
△			
△			
△			
△			

PROJECT # 17XXX

BURGER LOUNGE III LLC
FOUNTAINS AT ROSEVILLE
1198 ROSEVILLE PKWY. #135 - ROSEVILLE, CA 95678

DATE: 04/06/18

M4.2

THESE DRAWINGS AND SPECIFICATIONS ARE CONFIDENTIAL AND SHALL REMAIN THE SOLE PROPERTY OF BAKER ARCHITECTURE, WHICH IS THE OWNER OF COPYRIGHT IN THIS WORK. THEY SHALL NOT BE REPRODUCED IN WHOLE OR IN PART, SHARED WITH THIRD PARTIES OR USED IN ANY MANNER ON OTHER PROJECTS OR EXTENSIONS TO THIS PROJECT WITHOUT THE PRIOR WRITTEN CONSENT OF BAKER ARCHITECTURE.

EXHAUST FAN INFORMATION – Job#3348453

FAN UNIT NO.	TAG	FAN UNIT MODEL #	CFM	ESP.	RPM	H.P.	B.H.P.	ø	VOLT	FLA	DISCHARGE VELOCITY	WEIGHT (LBS.)	SONES
1		DU180HFA	2400	1.500	1210	1.500	0.9260	3	208	6.6	554 FPM	174	16
2		DU50HFA	725	1.000	1368	0.500	0.2870	1	115	5.6	276 FPM	76	13.3

MUA FAN INFORMATION – Job#3348453

FAN UNIT NO.	TAG	FAN UNIT MODEL #	BLOWER	HOUSING	MIN CFM	DESIGN CFM	ESP.	RPM	H.P.	B.H.P.	ø	VOLT	FLA	EVAP COOLER ENTERING DB TEMP.	EVAP COOLER ENTERING WB TEMP.	EVAP COOLER LEAVING DB TEMP.	EVAP COOLER LEAVING WB TEMP.	WEIGHT (LBS.)	SONES	BURNER EFFICIENCY(%)
3		A2-D.250-G15	G15-PB	A2-D.250	2000	2600	0.500	880	2.000	1.3470	3	208	6.1	99.0°F	64.0°F	78.0°F	64.0°F	986	14.5	92

GAS FIRED MAKE-UP AIR UNIT(S)

FAN UNIT NO.	TAG	INPUT BTUs	OUTPUT BTUs	TEMP. RISE	REQUIRED INPUT GAS PRESSURE	GAS TYPE
3		122087	112320	40 deg F	7 in. w.c. - 14 in. w.c.	Natural

FAN OPTIONS

FAN UNIT NO.	TAG	OPTION (Qty. - Descr.)
1		1 - Grease Box
2		1 - Grease Box
		1 - ECM Wiring Package-Exhaust - PWM Signal from ECPM03 Prewire (NIDEC Motor)
3		1 - AC Interlock Relay - 24VAC Coil
		1 - Motorized Backdraft Damper for A2-D Housing
		1 - Low Fire Start
		1 - Inlet Pressure Gauge, 0-35"
		1 - Manifold Pressure Gauge, -5 to 15" wc
		1 - Freeze Protection Drain Kit for Evaporative Coolers
		1 - Separate 120V Wiring Package (Required and used only for DCV or Prewire with VFD) - Three Phase Only
		1 - Size 2 Direct Fired Heater Low CFM Profile Package. Used on Heaters under 2500 cfm.

FAN ACCESSORIES

FAN UNIT NO.	TAG	EXHAUST			SUPPLY			
		GREASE CUP	GRAVITY DAMPER	WALL MOUNT	SIDE DISCHARGE	GRAVITY DAMPER	MOTORIZED DAMPER	WALL MOUNT
1		YES						
2		YES						
3							YES	

CURB ASSEMBLIES

NO.	ON FAN	WEIGHT	ITEM	SIZE
1	# 1	41 LBS	Curb	26.500"W x 26.500"L x 20.000"H Vented Hinged
2	# 2	31 LBS	Curb	19.500"W x 19.500"L x 20.000"H Vented Hinged
3	# 3	76 LBS	Curb	31.000"W x 79.000"L x 20.000"H Insulated
	# 3		Rail	4.000"W x 4.000"L x 36.000"H

FAN #2 DU50HFA - EXHAUST FAN

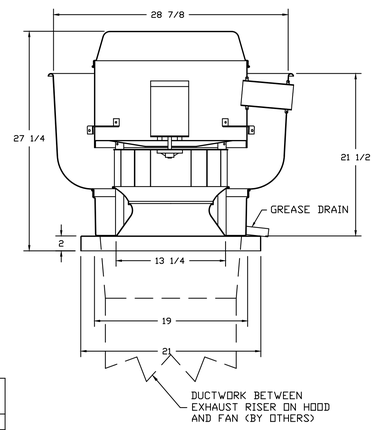

FEATURES:

- DIRECT DRIVE CONSTRUCTION (NO BELTS/PULLEYS)
- ROOF MOUNTED FANS
- RESTAURANT MODEL
- UL705 AND UL762 AND ULC-S645
- VARIABLE SPEED CONTROL
- INTERNAL WIRING
- WEATHERPROOF DISCONNECT
- THERMAL OVERLOAD PROTECTION (SINGLE PHASE)
- HIGH HEAT OPERATION 300°F (149°C)
- GREASE CLASSIFICATION TESTING

NORMAL TEMPERATURE TEST
EXHAUST FAN MUST OPERATE CONTINUOUSLY WHILE EXHAUSTING AIR AT 300°F (149°C) UNTIL ALL FAN PARTS HAVE REACHED THERMAL EQUILIBRIUM, AND WITHOUT ANY DETERIORATING EFFECTS TO THE FAN WHICH WOULD CAUSE UNSAFE OPERATION.

ABNORMAL FLARE-UP TEST
EXHAUST FAN MUST OPERATE CONTINUOUSLY WHILE EXHAUSTING BURNING GREASE VAPORS AT 600°F (316°C) FOR A PERIOD OF 15 MINUTES WITHOUT THE FAN BECOMING DAMAGED TO ANY EXTENT THAT COULD CAUSE AN UNSAFE CONDITION.

OPTIONS

GREASE BOX
ECM WIRING PACKAGE-EXHAUST - PWM SIGNAL FROM ECPM03 PREWIRE (NIDEC MOTOR)

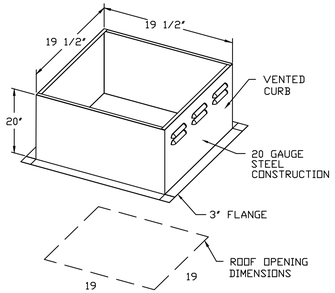

PITCHED CURBS ARE AVAILABLE FOR PITCHED ROOFS.

SPECIFY PITCH:
EXAMPLE: 7/12 PITCH = 30° SLOPE

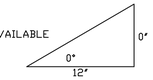

FAN #1 DU180HFA - EXHAUST FAN

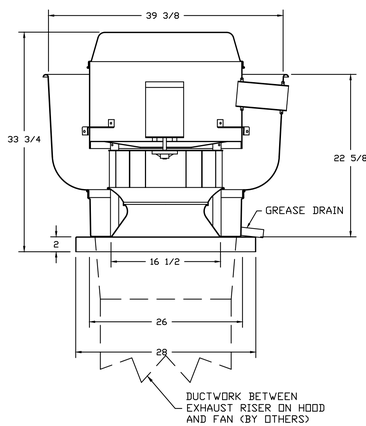

FEATURES:

- DIRECT DRIVE CONSTRUCTION (NO BELTS/PULLEYS)
- ROOF MOUNTED FANS
- RESTAURANT MODEL
- UL705 AND UL762 AND ULC-S645
- VARIABLE SPEED CONTROL
- INTERNAL WIRING
- WEATHERPROOF DISCONNECT
- THERMAL OVERLOAD PROTECTION (SINGLE PHASE)
- HIGH HEAT OPERATION 300°F (149°C)
- GREASE CLASSIFICATION TESTING

NORMAL TEMPERATURE TEST
EXHAUST FAN MUST OPERATE CONTINUOUSLY WHILE EXHAUSTING AIR AT 300°F (149°C) UNTIL ALL FAN PARTS HAVE REACHED THERMAL EQUILIBRIUM, AND WITHOUT ANY DETERIORATING EFFECTS TO THE FAN WHICH WOULD CAUSE UNSAFE OPERATION.

ABNORMAL FLARE-UP TEST
EXHAUST FAN MUST OPERATE CONTINUOUSLY WHILE EXHAUSTING BURNING GREASE VAPORS AT 600°F (316°C) FOR A PERIOD OF 15 MINUTES WITHOUT THE FAN BECOMING DAMAGED TO ANY EXTENT THAT COULD CAUSE AN UNSAFE CONDITION.

OPTIONS

GREASE BOX

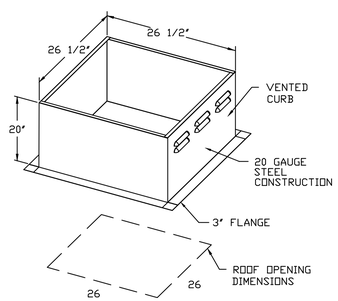

PITCHED CURBS ARE AVAILABLE FOR PITCHED ROOFS.

SPECIFY PITCH:
EXAMPLE: 7/12 PITCH = 30° SLOPE

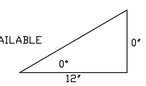

REVISIONS

DESCRIPTION	DATE:

CAPTIVEAIRE
www.captiveaire.com
San Diego Office
, San Diego, CA. 92117 PHONE: (858) 273-5084 FAX: (919) 747-5615 EMAIL: reg96@captiveaire.com

Burger Lounge - Roseville
1198 Roseville Parkway #135,
ROSEVILLE, CA, 95661

DATE: 3/22/2018
DWG.#: 3348453
DRAWN BY: mwasiluk
SCALE: 3/4" = 1'-0"
MASTER DRAWING
SHEET NO. 4
CITY STAMP

LICENSED ARCHITECT
KAMERON BAKER
No. C28547
REN. 6-19
STATE OF CALIFORNIA
BAKER [b a] architecture
4080 CENTRE ST, STE #203
SAN DIEGO, CA 92103 TEL.
(619) 281-5937
www.bakerarchitecture.com

REVISION SCHEDULE			
REV	DATE	BY	DESCRIPTION
1	05.29.18	-	BLDG. DEPT. PLAN CHECK
2			
3			
4			
5			

PROJECT # 17XXX

BURGER LOUNGE III LLC
FOUNTAINS AT ROSEVILLE
1198 ROSEVILLE PKWY. #135 - ROSEVILLE, CA 95678

DATE: 04/06/18

M4.3

THESE DRAWINGS AND SPECIFICATIONS ARE CONFIDENTIAL AND SHALL REMAIN THE SOLE PROPERTY OF BAKER ARCHITECTURE, WHICH IS THE OWNER OF COPYRIGHT IN THIS WORK. THEY SHALL NOT BE REPRODUCED IN WHOLE OR IN PART, SHARED WITH THIRD PARTIES OR USED IN ANY MANNER ON OTHER PROJECTS OR EXTENSIONS TO THIS PROJECT WITHOUT THE PRIOR WRITTEN CONSENT OF BAKER ARCHITECTURE.

FAN #3 A2-D.250-G15 - HEATER
1. DIRECT GAS FIRED HEATED MAKE UP AIR UNIT WITH 15" BLOWER
2. EVAP COOLER (CELDEK) W/INTAKE HOOD W/EZ FILTERS
3. DOWN DISCHARGE - AIR FLOW RIGHT -> LEFT
4. COOLING INTERLOCK RELAY. 24VAC COIL. 120V CONTACTS. LOCKS OUT BURNER CIRCUIT WHEN AC IS ENERGIZED.
5. MOTORIZED BACK DRAFT DAMPER 22.75" X 24" FOR SIZE 2 STANDARD & MODULAR HEATER UNITS W/EXTENDED SHAFT, STANDARD GALVANIZED CONSTRUCTION, 3/4" REAR FLANGE, LF120S ACTUATOR INCLUDED
6. LOW FIRE START. ALLOWS THE BURNER CIRCUIT TO ENERGIZE WHEN THE MODULATION CONTROL IS IN A LOW FIRE POSITION.
7. GAS PRESSURE GAUGE, 0-35", 2.5" DIAMETER, 1/4" THREAD SIZE
8. GAS PRESSURE GAUGE, -5 TO +15 INCHES WC, 2.5" DIAMETER, 1/4" THREAD SIZE
9. FREEZE PROTECTION DRAIN CONTROL KIT FOR EVAPORATIVE COOLERS. INCLUDES 3-WAY WATER SOLENOID VALVE 8316G064 (SHIPPED LOOSE), PRESSURE SWITCH INSTALLED UPSTREAM OF 2WAY SOLENOID IN UNIT, BRASS TEE, 2 NPT HALF INCH NIPPLES, AND TWO STAGE THERMOSTAT T6788A1361. FIELD WIRING REQUIRED BY OTHERS FOR 3-WAY VALVE. FOR BOTH CELDEK AND STANDARD V-BANK TYPE CONFIGURATIONS.
10. SEPARATE 120VAC WIRING PACKAGE FOR MAKE-UP AIR UNITS. OPTION MUST BE SELECTED WHEN MOUNTING VFD IN PREWIRE PANEL OR WITH DCV PACKAGE. PROVIDES SEPARATE 120VAC INPUT TO SUPPLY FAN. THIS 120V SIGNAL MUST BE RUN BY ELECTRICIAN FROM DCV TO MUA SWITCH.
11. PROFILE PLATE CONFIGURATION FOR SIZE 2 DIRECT FIRED UNIT FOR LOW CFM APPLICATIONS.

NOTE: SUPPLY DUCT MUST BE INSTALLED TO MEET SMACNA STANDARDS. A MINIMUM STRAIGHT DUCT LENGTH EQUAL TO THREE TIMES THE SUPPLY DUCT EQUIVALENT DIAMETER MUST BE MAINTAINED DOWNSTREAM OF UNIT DISCHARGE UNLESS OTHERWISE SPECIFIED. DO NOT RELY ON UNIT TO SUPPORT DUCT IN ANY WAY.

SUPPLY SIDE HEATER INFORMATION:

WINTER TEMPERATURE = 34°F. TEMP. RISE = 40°F.
BTUs CALCULATED OFF STANDARD AIR DENSITY
OUTPUT BTUs AT ALTITUDE OF 0.0 ft. = 112320
INPUT BTUs AT ALTITUDE OF 0.0 ft. = 122087

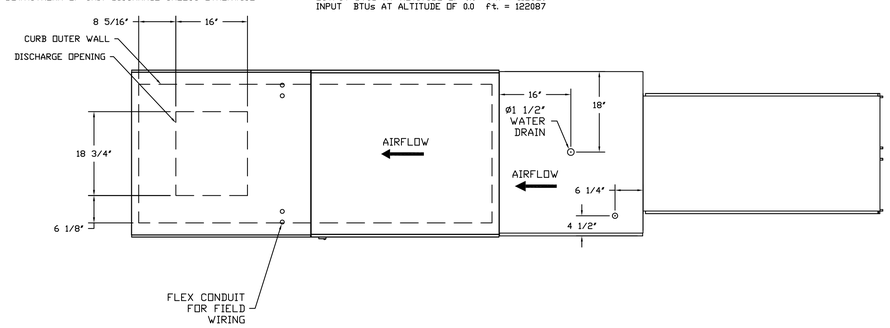

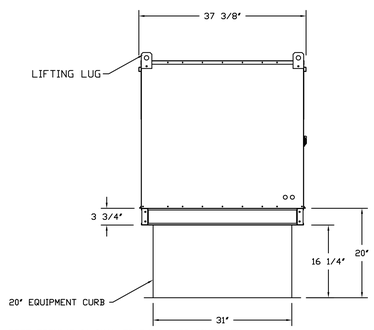

ROOF OPENING 2" SMALLER THAN CURB DIMENSION.

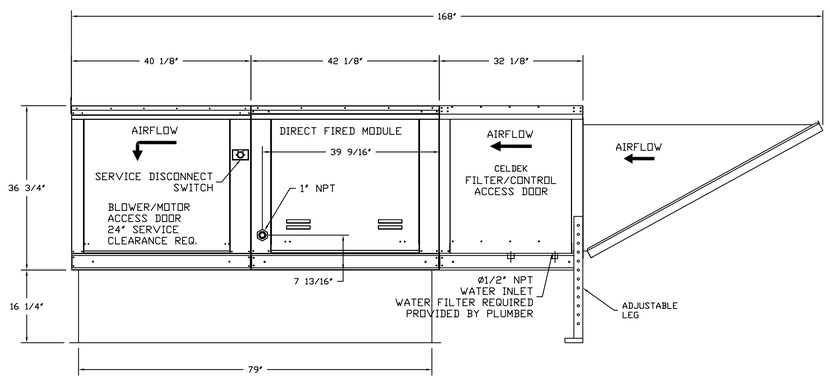

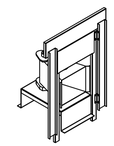

Direct Fired (DF) Profile Plate Assembly

Direct Fired Profile Plate Specifications:
Description:
Direct fired burners shall have patented (US Patent No: US6629523B2), self-adjusting profile plates designed to ensure proper air velocity and pressure drop across the burner. Profile plates shall allow burners to achieve clean combustion by limiting by-product levels to a maximum of 5ppm of carbon monoxide (CO), and 0.5ppm of nitrogen dioxide (NO2).

Application:
Spring-loaded burner profile plates are engineered to automatically react to the momentum of a fresh air stream, without the need for any motors or actuators to mechanically adjust them. With this feature, all DF units are designed for demand control ventilation (DCV) requirements.

Certifications:
All profile plate assemblies shall be included in the DF unit's ETL listing and comply with combined safety standards ANSI Z83.4 and CSA 3.7 (non-recirculating DF heaters) and ANSI Z83.18 (recirculating DF heaters).

General Construction:
-Profile plates shall be formed from G90 galvanized steel.
-Profile plates shall vary in size per unit.
-Profile plates shall be mounted along the same plane as the discharge of the burner.
-Design shall incorporate properly torqued, permanently mounted spring hinges.
-Spring hinges shall be made from plated steel.

REVISIONS

	DESCRIPTION	DATE:
1		
2		
3		
4		

CAPTIVEAIRE
www.captiveaire.com
San Diego Office
, San Diego, CA, 92117 PHONE: (858) 273-5084 FAX: (919) 747-5615 EMAIL: reg96@captiveaire.com

Burger Lounge - Roseville
1198 Roseville Parkway #135,
ROSEVILLE, CA, 95661

DATE: 3/22/2018

DWG.#: 3348453

DRAWN BY: mwasiluk

SCALE: 3/4" = 1'-0"

MASTER DRAWING

SHEET NO. 5

CITY STAMP

LICENSED ARCHITECT
No. C28547
REN. 6-19
STATE OF CALIFORNIA

BAKER [b a] architecture
4080 CENTRE ST, STE #203,
SAN DIEGO, CA 92103 TEL:
(619) 281-5937
www.bakerarchitecture.com

REV	DATE	BY	DESCRIPTION
1	05.29.18	--	BLDG. DEPT. PLAN CHECK
2	07.19.18	RjR	ADDENDUM A - DIMENSIONAL CORRECTION
3			
4			
5			

REVISION SCHEDULE

PROJECT # 17XXX

BURGER LOUNGE III LLC
FOUNTAINS AT ROSEVILLE
1198 ROSEVILLE PKWY. #135 - ROSEVILLE, CA 95678

DATE: 04/06/18

M4.4

THESE DRAWINGS AND SPECIFICATIONS ARE CONFIDENTIAL AND SHALL REMAIN THE SOLE PROPERTY OF BAKER ARCHITECTURE, WHICH IS THE OWNER OF COPYRIGHT IN THIS WORK. THEY SHALL NOT BE REPRODUCED IN WHOLE OR IN PART, SHARED WITH THIRD PARTIES OR USED IN ANY MANNER ON OTHER PROJECTS OR EXTENSIONS TO THIS PROJECT WITHOUT THE PRIOR WRITTEN CONSENT OF BAKER ARCHITECTURE.

GREASE DUCT & CHIMNEY SPECIFICATIONS:
PROVIDE GREASE DUCT EQUAL TO CAPTIVEAIRE SYSTEMS MODEL "DW" ROUND 20 GAUGE 430 STAINLESS STEEL DUCTWORK. MODEL "DW" IS LISTED TO UL-1978 AND IS INSTALLED USING "V" CLAMP LOCKING CONNECTIONS SEALED WITH 3M FIRE BARRIER 2000 PLUS. MODEL "DW" DOES NOT REQUIRE WELDING PROVIDING IT HAS BEEN INSTALLED PER THE MANUFACTURES INSTALLATION GUIDE.
PROVIDE RATED ACCESS DOORS AT EVERY CHANGE IN DIRECTION AND EVERY 12' ON CENTER. PER MANUFACTURES LISTING MODEL "DW" HORIZONTAL RUNS LESS THAN 75 FT. CAN BE SLOPED 1/16" PER 12", HORIZONTAL RUNS MORE THAN 75 FT. CAN BE SLOPED 3/16" PER 12". DUCT SHOULD BE SLOPED AS MUCH AS POSSIBLE TO REDUCE THE CHANCE OF GREASE ACCUMULATION IN HORIZONTAL RUNS.

IF THE DUCT OR CHIMNEY IS WITHIN 18 INCHES OF COMBUSTIBLE MATERIAL, PROVIDE UL-2221 OR UL-103 HT LISTED DOUBLE WALL GREASE DUCT OR DOUBLE WALL CHIMNEY EQUAL TO CAPTIVEAIRE SYSTEMS MODEL "DW- 2R, 2R TYPE HT, 3R, OR 3Z" ROUND 20 GAUGE 430 STAINLESS INNER DUCT INSULATED WITH A 24 GAUGE 430 STAINLESS OUTER SHELL.

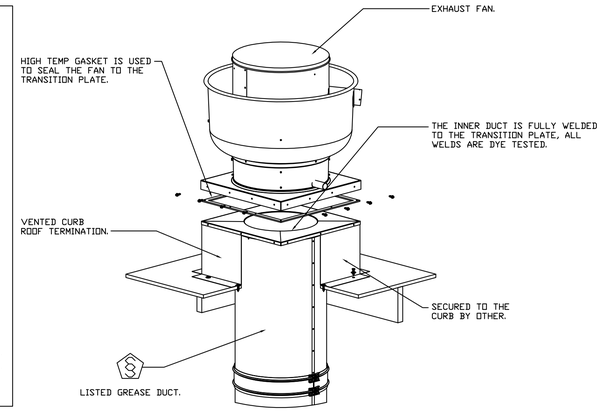

CUSTOMER APPROVAL TO MANUFACTURE:

Approved as Noted ☐
Approved with NO Exception Taken ☐
Revise and Resubmit ☐
SIGNATURE _____
Your Title _____ Date _____

REVISIONS

	DESCRIPTION	DATE:
△		
△		
△		
△		

CAPTIVEAIRE
www.captiveaire.com
San Diego Office
, San Diego, CA, 92117 PHONE: (858) 273-5084 FAX: (919) 747-5615 EMAIL: reg98@captiveaire.com

Burger Lounge - Roseville
1198 Roseville Parkway #135,
ROSEVILLE, CA, 95661

DATE: 3/22/2018
DWG.#: 3348453
DRAWN BY: mwasiluk
SCALE: 3/4" = 1'-0"
MASTER DRAWING

SHEET N
6

CITY STAMP

THESE DRAWINGS AND SPECIFICATIONS ARE CONFIDENTIAL AND SHALL REMAIN THE SOLE PROPERTY OF BAKER ARCHITECTURE, WHICH IS THE OWNER OF COPYRIGHT IN THIS WORK. THEY SHALL NOT BE REPRODUCED IN WHOLE OR IN PART, SHARED WITH THIRD PARTIES OR USED IN ANY MANNER ON OTHER PROJECTS OR EXTENSIONS TO THIS PROJECT WITHOUT THE PRIOR WRITTEN CONSENT OF BAKER ARCHITECTURE.

LICENSED ARCHITECT
KATHERINE DIANE BAKER
No. C28547
REN. 6-19
STATE OF CALIFORNIA

BAKER [b a] architecture
4080 CENTRE ST, STE #203,
SAN DIEGO, CA 92103 TEL:
(619) 281-5937
www.bakerarchitecture.com

REVISION SCHEDULE

REV	DATE	BY	DESCRIPTION
△	05.29.18	--	BLDG. DEPT. PLAN CHECK
△	07.19.18	RjR	ADDENDUM A - DIMENSIONAL CORRECTION
△			
△			
△			

PROJECT # 17XXX

BURGER LOUNGE III LLC
FOUNTAINS AT ROSEVILLE
1198 ROSEVILLE PKWY. #135 - ROSEVILLE, CA 95678

DATE: 04/06/18

M4.5

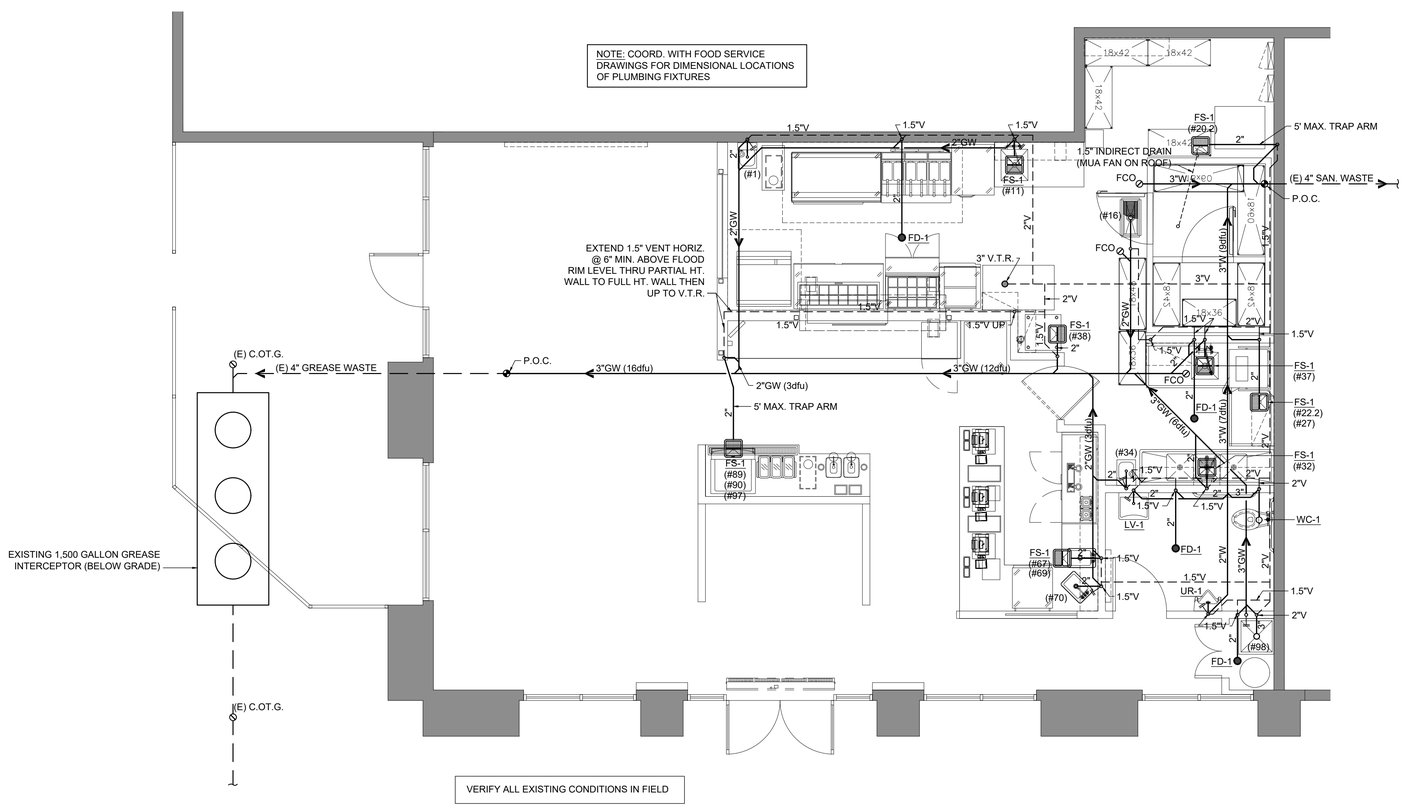

FOOD SERVICE EQUIPMENT SCHEDULE - PLUMBING

KEY	DESCRIPTION	WATER		DRAIN		GAS		
		COLD	HOT	DIRECT	INDIRECT	CONNECTION SIZE	MBTUH	REMARKS
1	HAND SINK	1/2"	1/2"	X				
5	GRIDDLE					3/4"	150	QUICK DISCONNECT
7	FRYER BATTERY					1 1/4"	366	QUICK DISCONNECT
9	FAUCET - ITEM #11	1/2"	1/2"	X				
11	PREP TABLE W/ SINK				X			INDIRECT DRAIN TO FLOOR SINK - 1" AIR GAP
16	FLOOR TROUGH			X				
20.2	WALK-IN COOLER FAN COIL				X			CONDENSATE DRAIN INDIRECT DRAIN TO FLOOR SINK - 1" AIR GAP
22.2	WALK-IN FREEZER FAN COIL				X			CONDENSATE DRAIN INDIRECT DRAIN TO FLOOR SINK - 1" AIR GAP
27	DISHWASHER	1/2"	1/2"		X			INDIRECT DRAIN TO FLOOR SINK - 1" AIR GAP
31	FAUCET w/ PRE-RINSE - ITEM #32	1/2"	1/2"					
32	3 COMPARTMENT SINK				X			
34	HAND SINK	1/2"	1/2"	X				
35	PRE-RINSE FAUCET - ITEM #37	1/2"	1/2"					
37	SOILED DISHTABLE W/ SCRAP SINK				X			INDIRECT DRAIN TO FLOOR SINK - 1" AIR GAP
38	ICE MAKER / STORAGE BIN	1/2"			X			INDIRECT DRAIN TO FLOOR SINK - 1" AIR GAP
38.1	WATER FILTER SYSTEM - ITEM #38	1/2"						
55	GRIDDLE					3/4"	90	QUICK DISCONNECT
67	DRAFT BEER DRIP TRAY				X			INDIRECT DRAIN TO FLOOR SINK - 1" AIR GAP
69	DUMP SINK - DROP IN				X			INDIRECT DRAIN TO FLOOR SINK - 1" AIR GAP
69.1	FAUCET - ITEM #69	1/2"	1/2"					
70	HAND SINK - DROP IN			X				
70.1	FAUCET - ITEM #70	1/2"	1/2"					
89	ICE MAKER	1/2"			X			INDIRECT DRAIN TO FLOOR SINK - 1" AIR GAP
89.1	WATER FILTER SYSTEM - ITEM #89	1/2"						
90	SODA DISPENSER				X			INDIRECT DRAIN TO FLOOR SINK - 1" AIR GAP
97	SODA CARBONATOR	1/2"			X			INDIRECT DRAIN TO FLOOR SINK - 1" AIR GAP INLINE R.P. BACKFLOW VALVE ON WATER SUPPLY
97.2	WATER FILTER SYSTEM - ITEM #97	1/2"						
98	MOP SINK			X				FLOOR MOUNTED - 24" x 24"
98.1	FAUCET - ITEM #98	1/2"	1/2"					

NOTE: PLUMBING CONTRACTOR SHALL COMPLETE ALL FINAL EQUIPMENT CONNECTIONS, INDIRECT DRAINS ETC., COORDINATE ALL SUPPLY & DRAIN SIZES AND LOCATIONS w/ FOOD SERVICE PLUMBING ROUGH-IN PLANS. ALL INDIRECT EQUIPMENT DRAIN LINES SHALL BE SLOPED MIN 1/8"/FT TOWARDS FLOOR SINK

NOTE: G.C. TO VERIFY W/ LOCAL JURISDICTION FOR INDIRECT OR DIRECT DRAIN CONNECTION @ 3 COMP. SINK & DISHWASHER.

MINIMUM PLUMBING FIXTURES CALCULATION

TOTAL OCCUPANTS - 27 (50% MEN & 50% WOMEN) TABLE 4-1, CPC

OCCUPANCY CALCULATION:

DINING AREA:	722 S.F. / 30 =24 OCC.
KITCHEN/SERVICE AREAS:	616 S.F. / 200 = 3 OCC.
RESTROOMS / JAN. / HALLWAY: (NIC)	136 S.F.

MINIMUM REQUIRED # OF PLUMBING FIXTURES:

1) SINGLE OCCUPANT RESTROOM FOR USE BY BOTH SEXES PER CPC 422.2 EXC. #3

ADDITIONAL COMMON USE RESTROOMS PROVIDED WITHIN 300' OF PREMISES - REF. SHEET A0 & A0.2

1

CITY OF ROSEVILLE ENVIRONMENTAL UTILITIES DEPT. NOTE:
PROJECTS THAT INCLUDE GREASE WASTE DRAINAGE SYSTEMS SHALL PASS DYE TEST INSPECTIONS PRIOR TO SCHEDULING THE BUILDING DIVISION'S UNDERGROUND PLUMBING INSPECTION & FINAL INSPECTION. CONTACT THE CITY OF ROSEVILLE ENVIRONMENTAL UTILITIES DEPT. AT 916.774-5770 TO SCHEDULE DYE TEST INSPECTION.

LEGEND

- WASTE PIPE
- VENT PIPE
- DOMESTIC COLD WATER PIPE
- DOMESTIC HOT WATER PIPE
- BALL VALVE
- CHECK VALVE
- BACKFLOW PREVENTER
- PRESSURE REDUCING VALVE
- THERMOSTATIC MIXING VALVE
- WALL CLEAN-OUT
- FLOOR CLEAN-OUT
- PLUMBING TRAP
- FLOW DIRECTION INDICATOR
- POINT OF CONNECTION

CITY STAMP

0' 2' 4'
SCALE: 1/4" = 1'-0"

1 WASTE / VENT PIPING PLAN

SCALE: 1/4"=1'-0"

THESE DRAWINGS AND SPECIFICATIONS ARE CONFIDENTIAL AND SHALL REMAIN THE SOLE PROPERTY OF BAKER ARCHITECTURE, WHICH IS THE OWNER OF COPYRIGHT IN THIS WORK. THEY SHALL NOT BE REPRODUCED (IN WHOLE OR IN PART), SHARED WITH THIRD PARTIES OR USED IN ANY MANNER ON OTHER PROJECTS OR EXTENSIONS TO THIS PROJECT WITHOUT THE PRIOR WRITTEN CONSENT OF BAKER ARCHITECTURE.

LICENSED ARCHITECT KARSON E. BAKER No. C28547 REN. 6-19 STATE OF CALIFORNIA

BAKER [b] [a] architecture
4080 CENTRE ST, STE #203
SAN DIEGO, CA 92103 TEL
(619) 281-5937
www.bakerarchitecture.com

REVISION SCHEDULE

REV	DATE	BY	DESCRIPTION
1	05.29.18	--	BLDG. DEPT. PLAN CHECK
2			
3			
4			
5			

PROJECT # 17XXX

BURGER LOUNGE III LLC
FOUNTAINS AT ROSEVILLE
1198 ROSEVILLE PKWY. #135 - ROSEVILLE, CA 95678

DATE: 04/06/18

P1.0

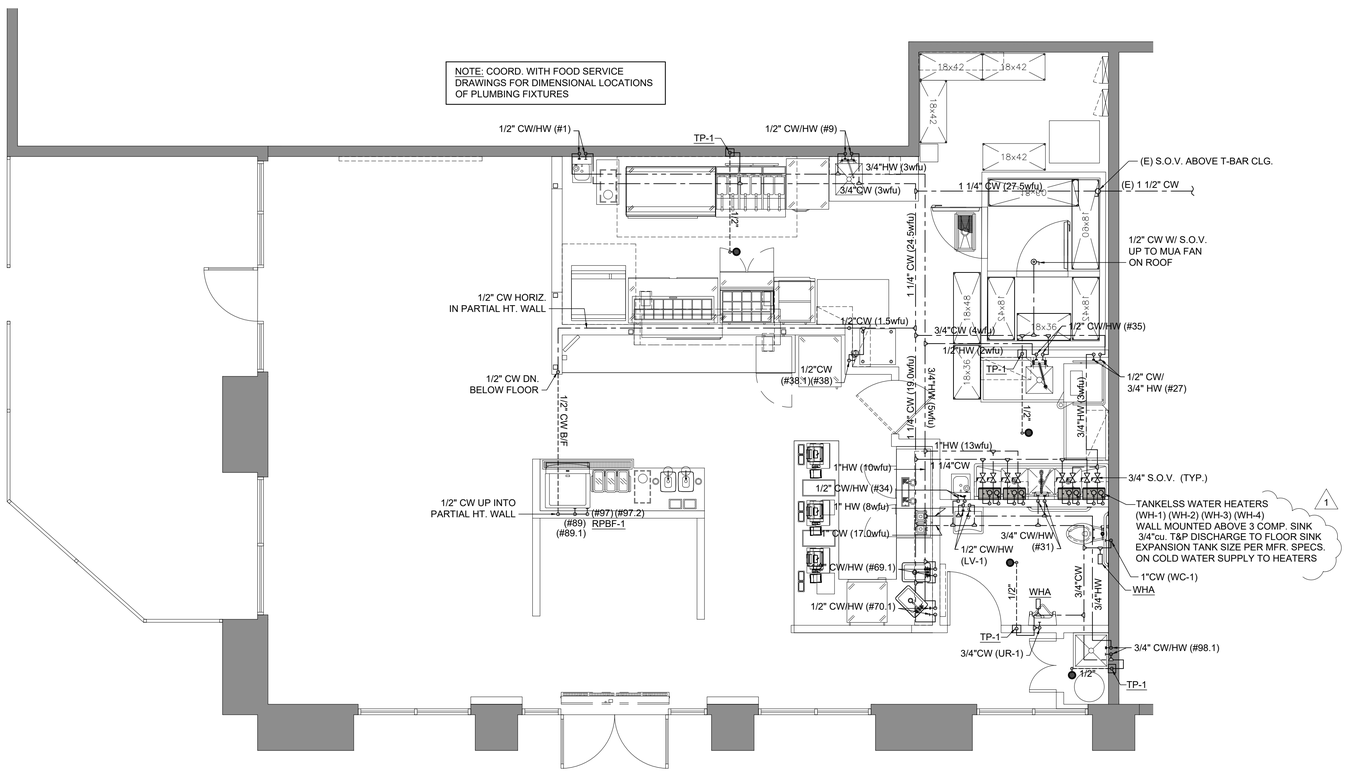

FOOD SERVICE EQUIPMENT SCHEDULE - PLUMBING

KEY	DESCRIPTION	WATER COLD	WATER HOT	DRAIN DIRECT	DRAIN INDIRECT	GAS CONNECTION SIZE	MBTUH	REMARKS
1	HAND SINK	1/2"	1/2"	X				
5	GRIDDLE					3/4"	150	QUICK DISCONNECT
7	FRYER BATTERY					1 1/4"	366	QUICK DISCONNECT
9	FAUCET - ITEM #11	1/2"	1/2"	X				
11	PREP TABLE W/ SINK				X			INDIRECT DRAIN TO FLOOR SINK - 1" AIR GAP
16	FLOOR TROUGH			X				
20.2	WALK-IN COOLER FAN COIL				X			CONDENSATE DRAIN INDIRECT DRAIN TO FLOOR SINK - 1" AIR GAP
22.2	WALK-IN FREEZER FAN COIL				X			CONDENSATE DRAIN INDIRECT DRAIN TO FLOOR SINK - 1" AIR GAP
27	DISHWASHER	1/2"	1/2"		X			INDIRECT DRAIN TO FLOOR SINK - 1" AIR GAP
31	FAUCET w/ PRE-RINSE - ITEM #32	1/2"	1/2"					
32	3 COMPARTMENT SINK				X			
34	HAND SINK	1/2"	1/2"	X				
35	PRE-RINSE FAUCET - ITEM #37	1/2"	1/2"					
37	SOILED DISHTABLE W/ SCRAP SINK				X			INDIRECT DRAIN TO FLOOR SINK - 1" AIR GAP
38	ICE MAKER / STORAGE BIN	1/2"			X			INDIRECT DRAIN TO FLOOR SINK - 1" AIR GAP
38.1	WATER FILTER SYSTEM - ITEM #38	1/2"						
55	GRIDDLE					3/4"	90	QUICK DISCONNECT
69	DUMP SINK - DROP IN				X			INDIRECT DRAIN TO FLOOR SINK - 1" AIR GAP
69.1	FAUCET - ITEM #69	1/2"	1/2"					
70	HAND SINK - DROP IN			X				
70.1	FAUCET - ITEM #70	1/2"	1/2"					
89	ICE MAKER	1/2"			X			INDIRECT DRAIN TO FLOOR SINK - 1" AIR GAP
89.1	WATER FILTER SYSTEM - ITEM #89	1/2"						
90	SODA DISPENSER				X			INDIRECT DRAIN TO FLOOR SINK - 1" AIR GAP
97	SODA CARBONATOR	1/2"			X			INDIRECT DRAIN TO FLOOR SINK - 1" AIR GAP INLINE R.P. BACKFLOW VALVE ON WATER SUPPLY
97.2	WATER FILTER SYSTEM - ITEM #97	1/2"						
98	MOP SINK			X				FLOOR MOUNTED - 24" x 24"
98.1	FAUCET - ITEM #98	1/2"	1/2"					

NOTE: PLUMBING CONTRACTOR SHALL COMPLETE ALL FINAL EQUIPMENT CONNECTIONS, INDIRECT DRAINS ETC., COORDINATE ALL SUPPLY & DRAIN SIZES AND LOCATIONS w/ FOOD SERVICE PLUMBING ROUGH-IN PLANS. ALL INDIRECT EQUIPMENT DRAIN LINES SHALL BE SLOPED MIN 1/8"/FT TOWARDS FLOOR SINK

WATER FIXTURE UNIT SCHEDULE

QTY.	FIXTURES	COLD WFU	COLD TOTAL	HOT WFU	HOT TOTAL
KITCHEN					
1	HAND SINK (#1) (#34) (#70)	1.0	3.0	1.0	3.0
1	DUMP SINK (#69)	1.0	1.0	1.0	1.0
1	SODA CARBONATOR (#97)	0.5	0.5	-	-
1	3 COMP SINK (#31)	3.0	3.0	3.0	3.0
1	PREP SINK (#9)	2.0	2.0	2.0	2.0
1	SCRAP SINK (#35)	2.0	2.0	2.0	2.0
1	MOP SINK (#98.1)	3.0	3.0	3.0	3.0
1	ICE MACHINE (#38) (#89)	0.5	1.0	-	-
1	DISWASHER (#27)	1.0	1.0	3.0	3.0
1	MAKE-UP AIR FAN (MUA-1)	1.0	1.0	-	-
RESTROOMS					
1	LAVATORY (LV-1)	1.0	1.0	1.0	1.0
1	WATER CLOSET (WC-1)	5.0	5.0		
1	URINAL (UR-1)	4.0	4.0		
TOTAL FIXTURE UNITS			27.5		18.0

PLUMBING FIXTURE FLOW RATES - CGBC 5.303.3
WATER CLOSET: 1.28 GPF MAX.
LAVATORY: 0.5 GPM @ 60 PSI
METERING FAUCET: 0.2 GAL PER CYCLE
URINAL: 0.125 GPF
KITCHEN FAUCETS: 1.8 GPM @ 60 PSI

WATER PIPE SIZING TABLE

(<8 FPS CW)
(<5 FPS HW)

PIPE SIZE	FIXTURE UNIT (MAX.) HOT WATER	COLD WATER FLUSH TANK	COLD WATER FLUSH VALVE
1/2"	2	2	-
3/4"	7	7	-
1"	16	18	-
1 1/4"	28	36	6
1 1/2"	46	69	21
2"	119	254	132

PIPING MATERIAL

PIPING	ABOVE GROUND	UNDER GROUND
WATER	TYPE - L, COPPER	TYPE - K, COPPER

ALL PIPES, FITTINGS AND FIXTURES ETC. THAT CONTACT POTABLE WATER FOR HUMAN CONSUMPTION SHALL SHOW APPROVAL TO NSF 61, ANNEX G. REFERENCE SECTION 604.11, CALIFORNIA PLUMBING CODE, 2016 EDITION AND HEALTH AND SAFETY CODE SECTION 11687

LEGEND

- WASTE PIPE
- VENT PIPE
- DOMESTIC COLD WATER PIPE
- DOMESTIC HOT WATER PIPE
- BALL VALVE
- CHECK VALVE
- BACKFLOW PREVENTER
- PRESSURE REDUCING VALVE
- THERMOSTATIC MIXING VALVE
- WALL CLEAN-OUT
- FLOOR CLEAN-OUT
- PLUMBING TRAP
- FLOW DIRECTION INDICATOR
- POINT OF CONNECTION

CITY STAMP

0' 2' 4'
SCALE: 1/4" = 1'-0"

1 WATER PIPING PLAN

SCALE: 1/4"=1'-0"

THESE DRAWINGS AND SPECIFICATIONS ARE CONFIDENTIAL AND SHALL REMAIN THE SOLE PROPERTY OF BAKER ARCHITECTURE, WHICH IS THE OWNER OF COPYRIGHT IN THIS WORK. THEY SHALL NOT BE REPRODUCED IN WHOLE OR IN PART, SHARED WITH THIRD PARTIES OR USED IN ANY MANNER ON OTHER PROJECTS OR EXTENSIONS TO THIS PROJECT WITHOUT THE PRIOR WRITTEN CONSENT OF BAKER ARCHITECTURE.

LICENSED ARCHITECT
KAZUYOSHI BAKER
No. C28547
REN. 6-19
STATE OF CALIFORNIA

BAKER [b] [a] architecture
4080 CENTRE ST, STE #203
SAN DIEGO, CA 92103 TEL.
(619) 281-5937
www.bakerarchitecture.com

REVISION SCHEDULE

REV	DATE	BY	DESCRIPTION
1	05.29.18	-	BLDG. DEPT. PLAN CHECK

PROJECT # 17XXX

BURGER LOUNGE III LLC
FOUNTAINS AT ROSEVILLE
1198 ROSEVILLE PKWY. #135 - ROSEVILLE, CA 95678

DATE: 04/06/18

P2.0

GAS CALCULATIONS				
DESCRIPTION	QTY.	BTUH	CFH	TOTAL CFH
GRIDDLE (#55)	1	90,000	90	90
GRIDDLE (#5)	1	150,000	150	150
FRYER (#7)	1	366,000	366	366
WATER HEATER	4	199,900	200	800
PATIO HEATER	3	40,000	40	120
A/C (RTU-1)	1	78,000	78	78
A/C (RTU-2)	1	60,000	60	60
MAKE-UP AIR FAN (MUA-1)	1	122,087	122	122
TOTAL GAS DEMAND				1,786
SYSTEM TOTAL DEVELOPED LENGTH				250'

PIPE SIZING CHART	
PIPE	MAX. CFH
1/2"	30
3/4"	63
1"	119
1-1/4"	244
1-1/2"	366
2"	704
2 1/2"	1120
3"	1980
0.50 in WC LOSS / 0.60 SG	

FOOD SERVICE EQUIPMENT SCHEDULE

KEY	DESCRIPTION	GAS CONNECTION SIZE	MBTUH	REMARKS
5	GRIDDLE	3/4"	150	S.O.V. BY P.C.
55	GRIDDLE	3/4"	90	S.O.V. BY P.C.
7	FRYER	1 1/4"	366	S.O.V. BY P.C.

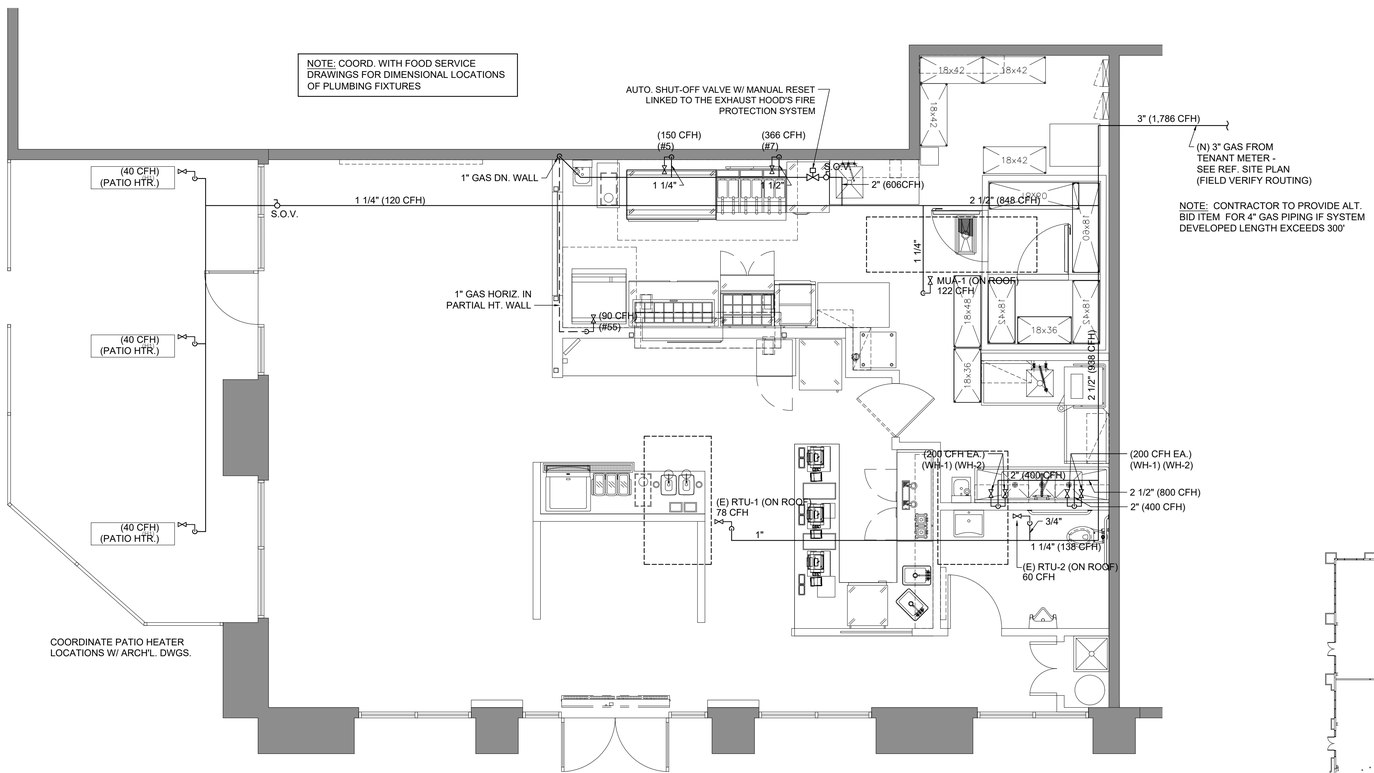

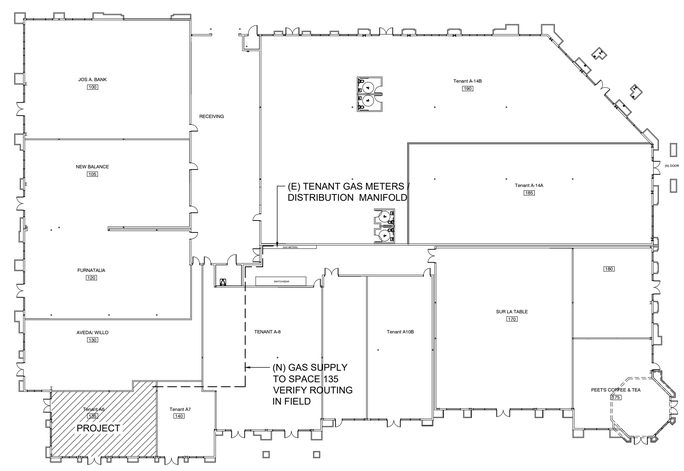

REFERENCE SITE PLUMBING PLAN
N.T.S.

0' 2' 4'
SCALE: 1/4" = 1'-0"

CITY STAMP

1 GAS PIPING PLAN

SCALE: 1/4"=1'-0"

THESE DRAWINGS AND SPECIFICATIONS ARE CONFIDENTIAL AND SHALL REMAIN THE SOLE PROPERTY OF BAKER ARCHITECTURE, WHICH IS THE OWNER OF COPYRIGHT IN THIS WORK. THEY SHALL NOT BE REPRODUCED IN WHOLE OR IN PART, SHARED WITH THIRD PARTIES OR USED IN ANY MANNER ON OTHER PROJECTS OR EXTENSIONS TO THIS PROJECT WITHOUT THE PRIOR WRITTEN CONSENT OF BAKER ARCHITECTURE.

LICENSED ARCHITECT KAYSONE BAKER No. C28547 REN. 6-19 STATE OF CALIFORNIA

BAKER [b a] architecture
4080 CENTRE ST, STE #203
SAN DIEGO, CA 92103 TEL
(619) 281-5937
www.bakerarchitecture.com

REVISION SCHEDULE

REV	DATE	BY	DESCRIPTION
1	05.29.18	-	BLDG. DEPT. PLAN CHECK
2			
3			
4			
5			

PROJECT # 17XXX

BURGER LOUNGE III LLC
FOUNTAINS AT ROSEVILLE
1198 ROSEVILLE PKWY. #135 - ROSEVILLE, CA 95678

DATE: 04/06/18

P3.0

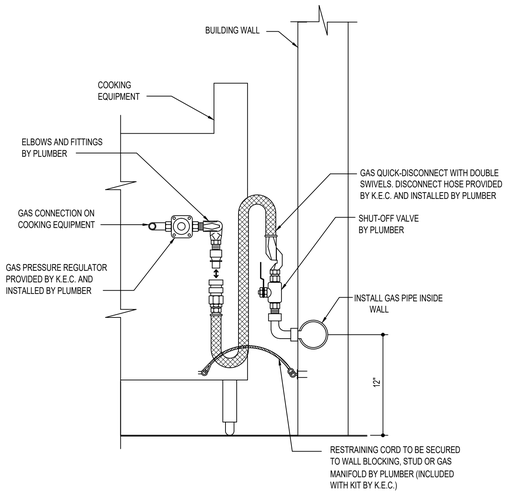

1	QUICK DISCONNECT DETAIL	SCALE: N.T.S.

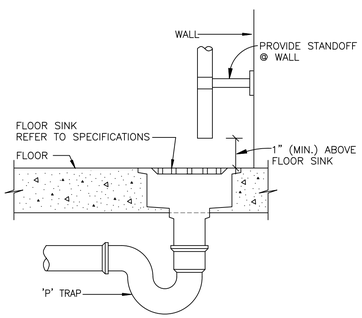

2	INDIRECT DRAIN DETAIL	SCALE: N.T.S.

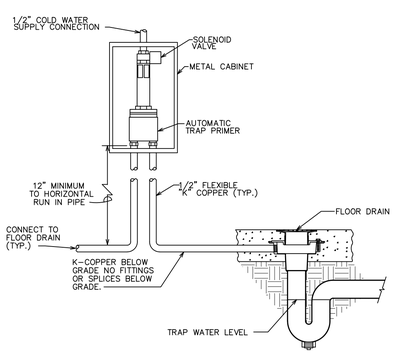

3	TRAP PRIMER DETAIL	SCALE: N.T.S.

GENERAL PLUMBING NOTES:

1. ALL PLUMBING CLEAN-OUTS SHALL BE INSTALLED WHERE READILY ACCESSIBLE. THE CONTRACTOR SHALL COORDINATE ALL CLEAN-OUT LOCATIONS WITH EQUIPMENT CABINETS, ETC. AND THE DESIGNER PRIOR TO ANY INSTALLATION.
2. ALL WORK AND MATERIAL SHALL BE PERFORMED AND INSTALLED IN COMPLIANCE WITH THE FOLLOWING CODES AS ADOPTED AND AMENDED BY THE INSPECTING AUTHORITY. NOTHING IN THESE DRAWINGS IS TO BE CONSTRUED TO PERMIT WORK NOT CONFORMING TO THESE CODES OR OTHERS APPLICABLE TO THIS PROJECT.
   A. 2016 CALIFORNIA BUILDING CODE
   B. 2016 CALIFORNIA MECHANICAL CODE
   C. 2016 CALIFORNIA PLUMBING CODE
   D. 2016 CALIFORNIA ELECTRICAL CODE
   E. 2016 CALIFORNIA BUILDING EFFICIENCY STANDARDS
3. ALL PLUMBING FIXTURE VENTS TO TERMINATE A MIN. OF 12 INCHES FROM ANY VERTICAL SURFACE AND 10 FEET FROM ANY OUTSIDE AIR INTAKES.
4. ALL PLUMBING WORK SHALL BE INSTALLED SO AS TO AVOID INTERFERENCE WITH ELECTRICAL AND MECHANICAL EQUIPMENT AND STRUCTURAL FRAMING.
5. ALL HOT WATER AND/OR CONDENSATE PIPING SHALL BE INSULATED WITH "MANVILLE MICRO-LOCK 850 APT" 1" THICK FOR PIPE SIZES UP TO 1"; 1 1/2" THICK FOR SIZES 1 1/2" AND LARGER. MIN. THERMAL RESISTANCE SHALL BE R4.0 TO R4.6 PER INCH.
6. ALL EQUIPMENT SHALL BE LATERALLY SUPPORTED IN ALL DIRECTIONS TO RESIST A MIN. OF 20% OF THE EQUIPMENT OPERATING WEIGHT.
7. UNIONS SHALL BE PROVIDED AND INSTALLED AFTER EACH SCREW-TYPE VALVE AND PRIOR TO EQUIPMENT CONNECTIONS.
8. ALL VALVES, UNIONS, ETC. TO BE SAME SIZE AS LINE SIZE U.O.N. ON DRAWINGS.
9. WATER SUPPLY TO CARBONATORS SHALL BE PROTECTED BY AN APPROVED AND LISTED RP BACK FLOW PREVENTER AS PROTECTION OF WATER CONNECTION TO CARBONATOR. THIS RELIEF VALVE SHALL DRAIN INDIRECTLY TO SEWER WITH LEGAL AIR GAP.
10. EXPANSION TANK WILL BE PROVIDED PER SECTION 608.3 CPC
11. ALL HOSE BIBBS SHALL HAVE ANTI-SIPHON VALVES. MOP SINKS SHALL HAVE A FAUCET WITH AN INTEGRATED ATMOSPHERIC VACUUM BREAKER.
12. NO VENTING SYSTEM SHALL TERMINATE LESS THAN 3 FT. ABOVE ANY FORCED AIR INLET LOCATED WITHIN 10 FT. OR LESS THAN 3 FT. FROM ANY LOT LINE, ALLEY OR STREET. 906.2 CPC
13. CROSS CONNECTION PROTECTION SHALL BE PROVIDED AT ALL POTABLE WATER SUPPLIED TO APPLIANCES AND EQUIPMENT
14. WATER HEATER TEMPERATURE & PRESSURE RELIEF DRAIN SHALL MAINTAIN 1/4" / FOOT MINIMUM SLOPE & TERMINATE BETWEEN 6" & 24" ABOVE GRADE OR TO AN APPROVED RECEPTOR PER CPC 608.5
15. WATER HEATER SHALL BE ANCHORED OR STRAPPED TO RESIST HORIZONTAL DISPLACEMENT DUE TO EARTHQUAKE MOTION PER SECTION 507.2 CPC
16. ROUTING & TERMINATION OF FLUE FOR WATER HEATER SHALL COMPLY W. CHAPTER 5, CPC
17. LAVATORY FAUCETS SHALL NOT EXCEED A WATER FLOW OF 0.50 GAL./MIN. @ 60 PSI
18. EACH KITCHEN & HAND SINK FAUCET SHALL NOT EXCEED A WATER FLOW OF 1.8 GPM.
19. ROUTING & TERMINATION OF FLUE & COMBUSTION AIR INTAKE FOR WATER HEATER
20. SHALL COMPLY WITH CH. 5, CPC & WITH MFR'S. WRITTEN SPECIFICATIONS

WASTE PIPING:

1. ALL DRAINS, WASTE AND VENTS TO BE CAST IRON, ABS DWV OR APPROVED EQUAL
2. TRAP PRIME FLOOR DRAINS, INDIRECT FROM CLOSEST COLD WATER SOURCE.
3. MIN 1/4"/FT. SLOPE AT ALL DRAIN AND WASTE LINES.
4. MIN. SLOPE TO FLOOR DRAINS 1/8"/FT. FOR A MIN. 3'-0"
5. BUILDING DRAIN AND VENT PIPING SHALL COMPLY WITH 701.0 & 903.0 CPC
6. ALL SANITARY SYSTEM MATERIALS SHALL BE LISTED BY AN APPROVED LISTING AGENCY
7. EACH VENT SHALL RISE VERTICALLY TO A POINT NOT LESS THAN 6 INCHES ABOVE THE FLOOD LEVEL RIM OF THE FIXTURE SERVED BEFORE OFFSETTING HORIZONTALLY AND BEFORE BEING CONNECTED TO ANY OTHER VENT.
8. CAST IRON PIPING BELOW GRADE SHALL BE SPIRAL WRAPPED WITH (2) LAYERS OF 20 MIL VISQUEEN TAPE.
9. INSTALLATION OF SOIL OR DRAIN PIPES IN FOOD HANDLING ESTABLISHMENTS WILL COMPLY WITH SECTION 317.0 CPC
10. FLOOR DRAINS OR SIMILAR TRAPS DIRECTLY CONNECTED TO THE DRAINAGE SYSTEM & SUBJECT TO INFREQUENT USE SHALL BE PROVIDED WITH AN APPROVED AUTOMATIC MEANS OF MAINTAINING THEIR WATER SEALS.

WATER PIPING NOTES:

1. COPPER TUBE FOR WATER PIPING SHALL HAVE A WEIGHT OF NOT LESS THAN THAT OF COPPER WATER TUBE TYPE "L" EXECUTION: TYPE "M" COPPER MAY BE USED FOR WATER PIPING WHEN PIPING IS ABOVE GROUND AND THE NORMAL MAX. PRESSURE DOES NOT EXCEED 100 LBS AND THE WORKING PRESSURE DOES NOT EXCEED 210 DEGREES F.
2. ALL UNDERCABINET COPPER TUBE PIPING TO BE TYPE "K"
3. SERVICE WATER HEATING SYSTEMS AND EQUIPMENT SHALL COMPLY WITH ENERGY EFFICIENCY STANDARDS, SECTION 113
4. PROVIDE INLINE S/S BACKFLOW VALVE ASSEMBLY ON C.W. SUPPLY TO BEVERAGE CARBONATOR WITH A WATER FILTER UPSTREAM OF THE BACKFLOW VALVE - USE FLEX LINE & S/S FITTINGS BETWEEN BACKFLOW VALVE & CARBONATOR, NO COPPER OR BRASS. AN APPROVED FUNNEL DRAIN WITH A 1" AIR GAP SHALL BE PROVIDED FOR THE BACKFLOW VALVE RELIEF. FUNNEL DRAIN MAY DISCHARGE TO FLOOR SINK
5. ALL HOT WATER PIPING SHALL BE INSULATED WITH "MANVILLE MICRO-LOCK 850 APT" 1" THICK FOR SIZES UP TO 1"; 1 1/2" THICK FOR SIZES 1 1/2" AND LARGER FOR TEMPERATURES RANGING FROM 105°F - 140°F.
   MIN. THERMAL RESISTANCE SHALL BE R4.0 TO R4.6 PER INCH.
6. ALL MATERIALS USED IN NEW WATER SUPPLY SYSTEM, EXCEPT VALUES & SIMILAR DEVICES SHALL BE OF LIKE MATERIAL USED IN THE EXISTING BUILDING PIPING - CPC 1015.5, CHAPTER 1 & 301.1.4
7. ALL PIPES, FITTINGS AND FIXTURES ETC. THAT CONTACT POTABLE WATER FOR HUMAN CONSUMPTION SHALL SHOW APPROVAL TO NSF 61, ANNEX G. REFERENCE SECTION 604.11, CALIFORNIA PLUMBING CODE AND HEALTH AND SAFETY CODE SECTION 116875

GAS PIPING:

1. ALL PIPE USED FOR THE INSTALLATION, EXTENSION, ALTERATION OR REPAIR OF ANY GAS PIPING SHALL BE STANDARD WEIGHT WROUGHT IRON OR STEEL (GALVANIZED OR BLACK), YELLOW BRASS (CONTAINING NOT MORE THAN 75% COPPER) OR INTERNALLY TINNED OR EQUIVALENTILY TREATED COPPER.
2. ALL FITTINGS USED IN CONNECTION WITH THE ABOVE PIPING SHALL BE AS REQ'D.
3. ALL VALVES AND APPURTENANCES USED IN CONJUNCTION WITH THE ABOVE PIPING SHALL BE OF A TYPE DESIGNED AND APPROVED FOR USE WITH FUEL GAS.
4. PROVIDE AN APPROVED SEISMIC GAS SHUT-OFF VALVE FOR ALL GAS FIRE EQUIPMENT.

GRAVITY GREASE INTERCEPTOR SIZING — 2016 CPC - TABLE 1014.3.6

DFU'S	INTERCEPTOR VOLUME
8	500 GALLONS
21	750 GALLONS
35	1,000 GALLONS
90	1,250 GALLONS
172	1,500 GALLONS
216	2,000 GALLONS

GREASE WASTE DRAINAGE FIXTURE UNITS

QTY.	FIXTURES	DRAINAGE FIXTURE UNIT (DFU)	TOTAL
1	MOP SINK	3	3
1	3 COMP. UTENSIL SINK	3	3
1	1 COMP. SCRAP SINK	2	2
1	1 COMP. PREP SINK	2	2
1	DUMP SINK	1	1
3	HAND SINK	1	3
2	FLOOR SINK	1	2
3	FLOOR DRAINS	-	-
		TOTAL	16

PLUMBING FIXTURE SCHEDULE

MARK	QTY.	FIXTURE	CONNECTION SIZE (MIN.) W	V	CW	HW	MANUFACTURER	REMARKS
FS-1	8	FLOOR SINK	PER PLAN	1 1/2"			ZURN Z1900-2	12" x 12" x 6" DEEP, 1/2 GRATE, CAST IRON BODY W/ WHITE ACID RESISTANT PORCELAIN COATING
FD-1	4	FLOOR DRAIN	2"	1 1/2"			ZURN ZB415N-P	POLISHED BRONZE TYPE N STRAINER, TRAP PRIMER
TP-1	4	TRAP PRIMER			1/2"		PRECISION PLUMBING PRODUCTS, INC. TRAP PRIMER VALVE # P-1-500 WITH ELMDOR ACCESS DOOR.	USE TRAP PRIMER DISTRIBUTION UNIT #PPP-D-4 FOR DISTRIBUTION UP TO 4 TRAPS FROM SINGLE PRIMER UNIT AS NEEDED
RPBF-1	1	REDUCED PRESS. BACKFLOW VALVE					WILKINS #12-375XL	INLINE ON WATER SUPPLY TO SODA CARBONATOR IN-DIRECT DRAIN TO FS-1 - 1" AIR GAP
WHA	1	WATER HAMMER ARRESTOR					WATTS #LF15M2-A	BRANCH LINE TO URINAL
WC-1	1	WATER CLOSET	3"	2"	1"		SLOAN WETS #202.1402-1.28-SMO W/ BEMIS #1955CT OPEN FRONT SEAT	1.28 GPF - FLOOR MOUNTED, ELONGATED BOWL SENSOR FLUSH VALVE (ADA COMPLIANT)
LV-1	1	LAVATORY	1 1/2"	1 1/2"	1/2"	1/2"	BISSONNET RENOVA.55 #222255 GROHE #36329 TOUCHLESS FAUCET	WALL MOUNT SINK (ADA COMPLIANT) 0.5 GPM MAX. , TEMPERATURE MIXER FOR 110°F SETTING
UR-1	1	URINAL	2"	1 1/2"	3/4"		TOTO #UT105UVG-#01 W/ ECO-POWER TOUCHLESS FLUSH VALVE	0.125 GPF - WALL MOUNTED (ADA COMPLIANT)
W.C.O.	PLAN	WALL CLEAN-OUT					ZURN Z1441	STAINLESS STEEL COVER
F.C.O.	PLAN	FLOOR CLEAN-OUT					ZURN ZB1400-BZ	POLISHED BRONZE TOP, ADJUSTABLE

WATER HEATER SCHEDULE

MARK	TYPE	MANUFACTURER	MODEL	STORAGE	GAS INPUT	RECOVERY RATE	REMARKS
WH-1	GAS TANKLESS	NORTIZ	NCC1991-DV	N/A	199.9K BTU	6.2 GPM @ 60°F	WALL MOUNTED TANK-LESS CONDENSING WATER HEATER, DIRECT VENT - 3"Ø OR 4"Ø SCHD. 40 PVC VENT PIPES PER MFR. SPECS.
WH-2	GAS TANKLESS	NORTIZ	NCC1991-DV	N/A	199.9K BTU	6.2 GPM @ 60°F	WALL MOUNTED TANK-LESS CONDENSING WATER HEATER, DIRECT VENT - 3"Ø OR 4"Ø SCHD. 40 PVC VENT PIPES PER MFR. SPECS.
WH-3	GAS TANKLESS	NORTIZ	NCC1991-DV	N/A	199.9K BTU	6.2 GPM @ 60°F	WALL MOUNTED TANK-LESS CONDENSING WATER HEATER, DIRECT VENT - 3"Ø OR 4"Ø SCHD. 40 PVC VENT PIPES PER MFR. SPECS.
WH-4	GAS TANKLESS	NORTIZ	NCC1991-DV	N/A	199.9K BTU	6.2 GPM @ 60°F	WALL MOUNTED TANK-LESS CONDENSING WATER HEATER, DIRECT VENT - 3"Ø OR 4"Ø SCHD. 40 PVC VENT PIPES PER MFR. SPECS.

WATER HEATER SIZING CALCULATION

TANKLESS WATER HEATER

QTY.	FIXTURES	GPM	TOTAL
1	MOP SINK	2.0	2.0
1	PREP SINK	0.5	0.5
3	HAND SINK	0.5	1.5
1	3 COMP. SINK	2.0	2.0
1	LAVATORY	0.5	0.5
1	SCRAP SINK	2.0	2.0
1	DUMP SINK	2.0	2.0
1	DISHWASHER	2.0	2.0
TOTAL GPM DEMAND =			12.5

3. Quick Connect Multi System Installation

- The Quick Connect Multi System allows the installation of two units together utilizing only the Quick Connect Cord.

The Quick Connect Cord is 6 ft.(2m) long. Install the units 6-18" (150 - 457mm) apart from each other to ensure the cord will be able to reach between the units. (See Typical Plumbing diagram). (If the distance between the two units is too great, not only will the cord not be able to reach, but the water temperature may also become unstable because of the difference in pipe length between the two units).

System Diagram

* When connecting two units, use only a single remote controller.

Note: Connect the remote controller to only one of the units.

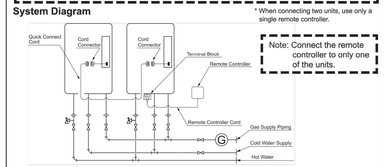

Typical Plumbing

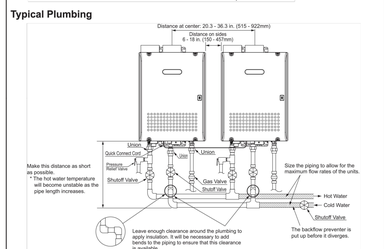

- Insulate the hot water piping to prevent heat loss. Insulate and apply heating materials to the cold water supply piping to prevent heat loss and freezing of pipes when exposed to excessively cold temperatures.

3

NORITZ WATER HEATER

Dimensions

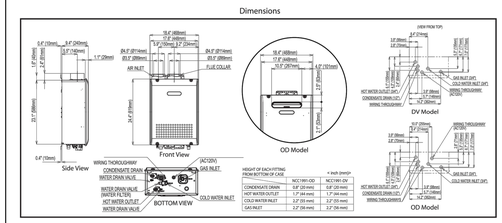

Flow Rates

Temperature Rise (°F)	30	40	45	50	60	70	80	90	100	110	120	130	140
Flow Rate (GPM)	11.1	9.3	8.4	7.4	6.2	5.3	4.6	4.1	3.7	3.4	3.1	2.9	2.7

Pressure Loss

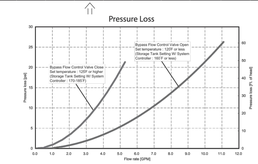

Specifications

Model Name		NCC1991-OD	NCC1991-OV
Weight		66 (pounds)	68 (pounds)
Operating Pressure		15 - 150 psi	
Gas Supply Pressure		NG: 4.0" - 10.5" LP: 8.0" - 14.0"	
Water Holding Capacity		0.3 Gallon (2 L)	
Connection Sizes	Water Inlet	3/4"	
	Hot Water Outlet	3/4"	
	Gas Inlet	3/4"	
	Condensate Drain	1/2" Threaded	
Power	Supply	120VAC (60Hz), less than 4 amperes	
	Consumption	NG:78W LP:80W Freeze Prevention 223W	NG:81W LP:83W Freeze Prevention 223W
Freeze Protection		Outdoor: -4°F Indoor: -30°F	
Temperature Settings	°F Mode	100-150°F (in 5°F intervals), 160, 170, 185°F (14 Options)	
	°C Mode	37-48°C (in 1°C intervals), 50-85°C (in 5°C intervals) (20 Options)	
Default Temperature Options	°F Mode	120, 135, 140, 185°F (Default is 120°F)	
	°C Mode	50, 57, 60, 85°C (Default is 50°C)	

Noritz America reserves the right to discontinue, or change at any time, the designs and/or specifications of its products without notice.

Rev. 4/12

CITY STAMP

THESE DRAWINGS AND SPECIFICATIONS ARE CONFIDENTIAL AND SHALL REMAIN THE SOLE PROPERTY OF BAKER ARCHITECTURE, WHICH IS THE OWNER OF COPYRIGHT IN THIS WORK. THEY SHALL NOT BE REPRODUCED IN WHOLE OR IN PART, SHARED WITH THIRD PARTIES OR USED IN ANY MANNER ON OTHER PROJECTS OR EXTENSIONS TO THIS PROJECT WITHOUT THE PRIOR WRITTEN CONSENT OF BAKER ARCHITECTURE.

LICENSED ARCHITECT — KARSONE BAKER — No. C28547 — REN. 6-19 — STATE OF CALIFORNIA

BAKER [b a] architecture
4080 CENTRE ST, STE #203
SAN DIEGO, CA 92103 TEL
(619) 281-5937
www.bakerarchitecture.com

REVISION SCHEDULE			
REV	DATE	BY	DESCRIPTION
1	05.29.18	-	BLDG. DEPT. PLAN CHECK

PROJECT # 17XXX

BURGER LOUNGE III LLC
FOUNTAINS AT ROSEVILLE
1198 ROSEVILLE PKWY. #135 - ROSEVILLE, CA 95678

DATE: 04/06/18

P4.0

RACEWAY & CONDUCTOR SCHEDULE

FUSED SWITCHES/CIRCUIT BREAKERS/RACEWAYS (C)/(THHN/THWN) CONDUCTORS (AWG/KCMIL) GROUNDINGS: SHALL BE AS INDICATED BY COLUMNS IN THIS SCHEDULE AND AS SHOWN ON POWER SINGLE LINE DIAGRAMS, DRAWINGS, PLANS OR DETAILS.

AMPERE FUSE SIZE OR CIRCUIT BREAKER TRIP RATING	AMPERE FUSED SWITCH SIZE	COPPER CONDUCTOR	RACEWAY & COPPER CONDUCTOR	
		EQUIP. GROUND	3PH, 3W OR 1PH, 3 W	3PH, 4W
20	30	12	3/4"C - 3#12	3/4"C - 4#12
30	30	10	3/4"C - 3#10	3/4"C - 4#10
40	60	10	1"C - 3#8	1"C - 4#8
50	60	10	1 1/4"C - 3#6	1 1/4"C - 4#6
60	60	10	1 1/4"C - 3#4	1 1/4"C - 4#4

ELECTRICAL LEGEND

	DUPLEX RECEPTACLE 18" A.F.F. U.O.N.
	GFCI DUPLEX RECEPTACLE 18" A.F.F. U.O.N.
	QUADRUPLEX RECEPTACLE 18" A.F.F. U.O.N.
	DUPLEX RECEPTACLE CEILING MOUNTED
	208V RECEPTACLE 18" A.F.F. U.O.N.
J	JUNCTION BOX
	TELEPHONE/DATA OUTLET 3/4"C. & PULL STRING ABOVE CEILING 18" A.F.F. U.O.N.
	ELECTRICAL DISCONNECT

ELECTRICAL NOTES:

1. ALL WORK TO COMPLY WITH 2016 CALIFORNIA ELECTRICAL CODE & 2016 CALIFORNIA ENERGY CODE
2. ELECTRICAL SUBJECT TO INSPECTIONS.
3. ALL SIGNS REQUIRE SEPARATE PERMITS AND APPROVALS
4. CONTRACTOR SHALL USE A CODE APPROVED WIRING METHOD OF THE FOLLOWING:
   a) ALL CONDUITS BELOW SLAB OR GRADE SHALL BE PVC AND SHALL INCLUDE A GROUND WIRE
   b) ALL EXPOSED/CONCEALED CONDUIT SHALL BE EMT - 3/4" CONDUIT (MIN.) FOR 20AMP CIRCUITS U.O.N.
   c) ALL CONDUCTORS FOR FEEDERS AND BRANCH WIRING SHALL BE THWN COPPER
5. ALL ELECTRICAL PENETRATIONS INTO THE WALK-IN FREEZER SHALL BE SEALED PER SECTION 300.7 OF THE CEC.
6. ALL 125 VOLT, SINGLE PHASE 15 & 20 AMP RECEPTACLES INSTALLED IN KITCHEN AREAS SHALL HAVE GFCI PROTECTION - CEC 210.8(B)
7. ALL CIRCUIT BREAKERS CONTROLLING FLUORESCENT LIGHTING SHALL SWD LISTED.
8. LABEL INSIDE OF ALL RECEPTACLES COVERS, DISCONNECTS ETC. W/ CORRESPONDING CIRCUIT NUMBERS.
9. EQUIPMENT GROUND CONDUCTORS SHALL BE INSTALLED IN FLEXIBLE CONDUITS.
10. PROVIDE SWITCH & RECEPTACLE HEIGHTS PER STATE OF CALIFORNIA ACCESSIBLE REQUIREMENTS.
11. THE UNGROUNDED & GROUNDED CONDUCTORS OF EACH MULT-IWIRE BRANCH CIRCUIT SHALL BE GROUPED BY WIRE TIES OR SIMILAR MEANS IN AT LEAST ONE LOCATION WITHIN THE PANEL BOARD OR OTHER POINT OF ORIGINATION CEC 210.4(D)
12. EACH MULT-IWIRE BRANCH CIRCUIT SHALL BE PROVIDED WITH A MEANS THAT WILL SIMULTANEOUSLY DISCONNECT ALL UNGROUNDED CONDUCTORS AT THE POINT WHERE THE BRANCH CIRCUIT ORIGINATES. CEC 210.4
13. PROVIDE ARC FLASH LABELING AS REQUIRED PER CEC 110.16
14. RACEWAY SEALS, CONDUITS OR RACEWAYS THROUGH WHICH MOISTURE MAY CONTACT LIVE PARTS SHALL BE SEALED OR PLUGGED AT EITHER OR BOTH ENDS.
15. FIELD VERIFY SERVICE RECEPTACLE IS PROVIDED WITHIN 25 FEET OF ROOFTOP MECHANICAL EQUIPMENT.
16. APPLIANCES RATED OVER 300 VOLT AMPERES THAT ARE PERMANENTLY CONNECTED SHALL BE PERMITTED TO USE THE BRANCH CIRCUIT BREAKER OR SWITCH AS A DISCONNECTING MEANS WHERE THE SWITCH OR CIRCUIT BREAKER IS WITHIN SIGHT OF THE APPLIANCE OR CAPABLE OF BEING LOCKED IN THE OPEN POSITION (422.13 (B))

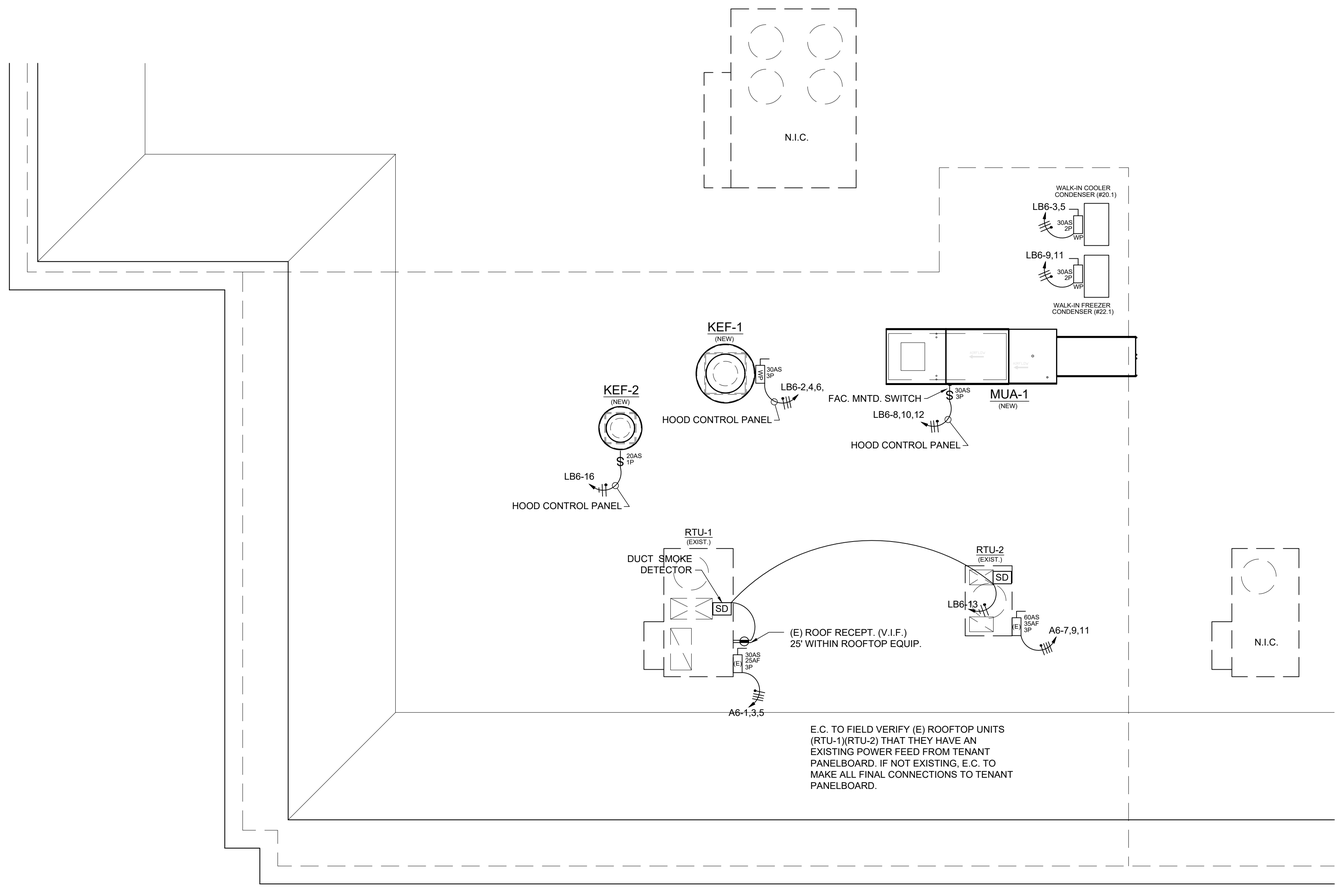

VERIFY ALL EXISTING CONDITIONS IN FIELD

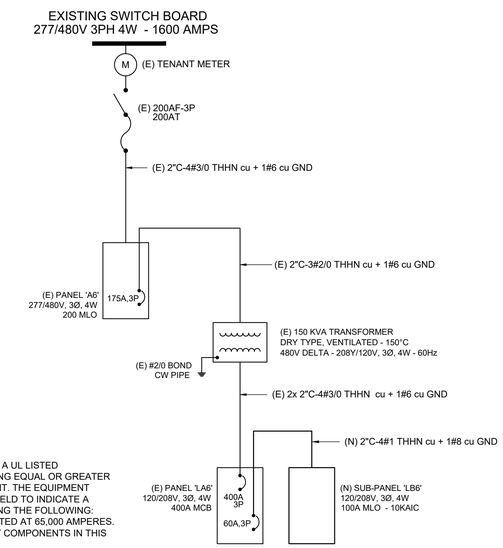

SERIES RATED DEVICES SHALL HAVE A UL LISTED COMBINATION FAULT CURRENT RATING EQUAL OR GREATER THAN THE AVAILABLE FAULT CURRENT. THE EQUIPMENT SHALL BE LEGIBLY MARKED IN THE FIELD TO INDICATE A SERIES COMBINATION RATING STATING THE FOLLOWING: "CAUTION - SERIES COMBINATION RATED AT 65,000 AMPERES. USE ONLY IDENTIFIED REPLACEMENT COMPONENTS IN THIS SYSTEM"

SINGLE LINE DIAGRAM

N.T.S.

VERIFY ALL EXISTING CONDITIONS IN FIELD

CITY STAMP

0' 2' 4'
SCALE: 1/4" = 1'-0"

1 ROOF POWER PLAN

SCALE: 1/4"=1'-0"

THESE DRAWINGS AND SPECIFICATIONS ARE CONFIDENTIAL AND SHALL REMAIN THE SOLE PROPERTY OF BAKER ARCHITECTURE, WHICH IS THE OWNER OF COPYRIGHT IN THIS WORK. THEY SHALL NOT BE REPRODUCED IN WHOLE OR IN PART, SHARED WITH THIRD PARTIES OR USED IN ANY MANNER ON OTHER PROJECTS OR EXTENSIONS TO THIS PROJECT WITHOUT THE PRIOR WRITTEN CONSENT OF BAKER ARCHITECTURE.

LICENSED ARCHITECT
KAREEM BAKER
No. C28547
REN. 6-19
STATE OF CALIFORNIA

BAKER [b a] architecture
4080 CENTRE ST, STE #203
SAN DIEGO, CA 92103 TEL.
(619) 281-5937
www.bakerarchitecture.com

REVISION SCHEDULE

REV	DATE	BY	DESCRIPTION
1	05.29.18	-	BLDG. DEPT. PLAN CHECK

PROJECT # 17XXX

BURGER LOUNGE III LLC
FOUNTAINS AT ROSEVILLE
1198 ROSEVILLE PKWY. #135 - ROSEVILLE, CA 95678

DATE: 04/06/18

E1.0

FOOD SERVICE EQUIPMENT SCHEDULE

#	DESCRIPTION	ELECTRICAL			
		VOLT	PHASE	AMP	CONN.
4	EXHAUST HOOD CONTROL PANEL	120	1	15.0	D
5	60" GRIDDLE	115	1	1.1	P
6	REFR. GRIDDLE STAND	115	1	5.7	P
7	FRYER	115/115	1	7.0/3.0	P
8	DUAL TEMP. REFRIG./FREEZER	120/120	1	5.3/5.4	P
20	LIGHTS - WALK IN COOLER	115	1	15.0	D
20.1	CONDENSER - WALK IN COOLER	208	1	4.6	D
20.2	FAN COIL - WALK IN COOLER	115	1	0.8	D
22	LIGHTS - WALK IN FREEZER	115	1	15.0	D
22.1	CONDENSER - WALK IN FREEZER	208	1	6.0	D
22.2	FAN COIL - WALK IN FREEZER	208	1	2.0	D
27	DISHWASHER	208	3	56.4	D
38	ICE MACHINE	115	1	15.0	D
46	UNDERCOUNTER REFRIGERATOR	115	1	6.3	P
47	FOOD WARMER	120	1	10.0	P
48	P.O.S. PRINTER	120	1	1.0	P
50	PREP REFRIGERATOR	115	1	6.3	P
51	PREP REFRIGERATOR	115	1	8.2	P
53	P.O.S. PRINTER	120	1	1.0	P
55	36" GRIDDLE	115	1	0.7	P
60	'TO-GO' STATION	120	1	5.0	P
62	OVERHEAD FOOD WARMER	208	1	14.0	D
65	UNDERCOUNTER REFRIGERATOR	115	1	2.5	P
66	REACH-IN REFRIGERATOR	120	1	6.9	P
67	BEER DISPENSER	115	1	9.6	P
68	BLENDER	120	1	8.6	P
72	UNDERCOUNTER FREEZER	115	1	6.0	P
75	P.O.S. SYSTEM	120	1	5.0	P
78	P.O.S. SYSTEM	120	1	5.0	P
81	P.O.S. SYSTEM	120	1	5.0	P
85	AIR CURTAIN	208	1	1.7	D
87	BEVERAGE DISPENSER	115	1	8.5	P
89	ICE MACHINE	208	1	11.0	D
90	SODA DISPENSER	120	1	5.0	P
97	SODA CARBONATOR	120	1	5.0	P

PANEL SCHEDULE "LB6"

LOCATION: KITCHEN
MOUNT: SURFACE
120/208V,3PH.,4W.
100 AMP MAIN LUG

DESCRIPTION	A	B	C	BKR	CIR			CIR	BKR	A	B	C	DESCRIPTION
W.I. COOLER (#20)(#20.2)	1817			20	1			2	20	990			EXHAUST FAN (KEF-1)
W.I. COOLER CONDENSER (#20.1)		478		20	3			4			990		
			478	2	5			6	3			990	
W.I. FREEZER (#22)	1725			20	7			8	20	915			MAKE-UP AIR FAN (MUA-1)
W.I. FRZR. COIL COND. (#20.1)(20.2)		832		20	9			10			915		
			832	2	11			12	3			915	
SMOKE DETECTORS/ROOF REC.	380			20	13			14	20	--			SPARE
EXTERIOR SIGN		1200		20	15			16	20		805		EXHAUST FAN (KEF-2)
EXTERIOR SIGN			1200	20	17			18	20			900	DINING RM. T.V. RECEPT.
SPACE	--			--	19			20	--	--			SPACE
SPACE		--		--	21			22	20		1080		DINING CONV. RECEPT.
SPACE			--	--	23			24	--			--	SPACE
SPACE	--			--	25			26	--	--			SPACE
SPACE		--		--	27			28	--		--		SPACE
SPACE			--	--	29			30	--			--	SPACE
WATTS PER LINE	3922	2510	2510							1905	3790	2805	

TOTAL ØA 5,827 ØB 6,300 ØC 5,315
SUB-TOTAL 17,442
LM (125%) 248
LCL (125%) ---
TOTAL LOAD 17,690 WATTS AT 120/208 V.,3Ø, 4W.= 49 A.

RACEWAY & CONDUCTOR SCHEDULE

FUSED SWITCHES/CIRCUIT BREAKERS/RACEWAYS (C)/(THHN/THWN) CONDUCTORS (AWG/KCMIL) GROUNDINGS; SHALL BE AS INDICATED BY COLUMNS IN THIS SCHEDULE AND AS SHOWN ON POWER SINGLE LINE DIAGRAMS, DRAWINGS, PLANS OR DETAILS.

AMPERE FUSE SIZE OR CIRCUIT BREAKER TRIP RATING	AMPERE FUSED SWITCH SIZE	COPPER CONDUCTOR	RACEWAY & COPPER CONDUCTOR	
		EQUIP. GROUND	3PH, 3W OR 1PH, 3 W	3PH, 4W
20	30	12	3/4"C - 3#12	3/4"C - 4#12
30	30	10	3/4"C - 3#10	3/4"C - 4#10
40	60	10	1"C - 3#8	1"C - 4#8
50	60	10	1 1/4"C - 3#6	1 1/4"C - 4#6
60	60	10	1 1/4"C - 3#4	1 1/4"C - 4#4

NOTE: CIRCUITS / CIRCUIT BREAKERS IN THIS PANEL ARE EXISTING WHERE INDICATED (EX) - E.C. TO VERIFY ALL EXISTING CIRCUIT DESIGNATIONS

PANEL SCHEDULE "A6"

LOCATION: KITCHEN
MOUNT: SURFACE
277/480V,3PH.,4W.
200 AMP M.L.O.

DESCRIPTION	A	B	C	BKR	CIR			CIR	BKR	A	B	C	DESCRIPTION
ROOFTOP A/C (RTU-1) (EX)	5820			25	1			2	175	25320			150KVA TRANSFORMER (EX)
		5820			3			4			25266		
			5820	3	5			6	3			21990	
ROOFTOP A/C (RTU-2) (EX)	6787			35	7			8	--	--			SPACE
		6787			9			10	--		--		SPACE
			6787	3	11			12	--			--	SPACE
SPACE	--			--	13			14	--	--			SPACE
SPACE		--		--	15			16	--		--		SPACE
SPACE			--	--	17			18	--			--	SPACE
SPACE	--			--	19			20	--	--			SPACE
SPACE		--		--	21			22	--		--		SPACE
SPACE			--	--	23			24	--			--	SPACE
SPACE	--			--	25			26	--	--			SPACE
SPACE		--		--	27			28	--		--		SPACE
SPACE			--	--	29			30	--			--	SPACE
SPACE	--			--	31			32	--	--			SPACE
SPACE		--		--	33			34	--		--		SPACE
SPACE			--	--	35			36	--			--	SPACE
SPACE	--			--	37			38	--	--			SPACE
SPACE		--		--	39			40	--		--		SPACE
SPACE			--	--	41			42	--			--	SPACE
WATTS PER LINE	12607	12607	12607							25320	25266	21990	

TOTAL ØA 37,927 ØB 37,873 ØC 34,597
SUB-TOTAL 110,397
LM (125%) 1,697
LCL (125%) ---
TOTAL LOAD 112,094 WATTS AT 277/480 V.,3Ø, 4W.= 135 A.

NOTE: CIRCUITS / CIRCUIT BREAKERS IN THIS PANEL ARE EXISTING WHERE INDICATED (EX) - E.C. TO VERIFY ALL EXISTING CIRCUIT DESIGNATIONS

PANEL SCHEDULE "LA6"

LOCATION: KITCHEN
MOUNT: SURFACE
120/208V,3PH.,4W.
400 AMP M.C.B.

DESCRIPTION	A	B	C	BKR	CIR			CIR	BKR	A	B	C	DESCRIPTION
LTG - DINING + EM **	413			20	1			2	20	583			LTG - KITCHEN / RR + EM **
LTG - DINING PENDANTS		720		20	3			4	20		346		LTG - TAPE / MENU BD. / INT. SIGN
LTG - PATIO			192	20	5			6	20			100	LTG TIMECLOCK
SHOW WINDOW RECEPT.	1800			20	7			8	20	1440			HAND DRYER - RR ***
SHOW WINDOW RECEPT.		1800		20	9			10	20		400		TELE. BACKBD.
PATIO HEATERS			240	20	11			12	20			600	A/V CABINET RECEPT.
POS (#75) (#78) (#81)	1800			20	13			14	20	1104			BEER DISPENSER (#67)
BEVERAGE DISP. (#87)		978		20	15			16	20		1032		BLENDER (#68)
SODA (#90) CARBONATOR (#97)			1200	20	17			18	20			1032	BLENDER (#68)
ICE MACHINE (#89) ***	1144			20	19			20	20	690			U/C REFRIGERATOR (#72)
		1144		2	21			22	20		1668		PREP REFRIG. (#50)(#51)
OVERHEAD WARMER (#62) ***			1456	20	23			24	20			1200	FOOD WARMER (#47)
	1456			2	25			26	20	905			U/C REFR. (#46) CV RECEPT.
GRIDDLE (#55) PRINT/MON. (#48)(#53) (#60)		924		20	27			28	20		1725		ICE MACHINE (#38)
GRIDDLE (#5) STAND (#6)			782	20	29			30	20			1128	U/C REFRIG. (#65) REFR. (#66)
FRYERS (#7)	1150			20	31			32	20	240			WATER HEATER CONTROLS
DUAL TEMP. REFRIG. (#8)		1284		20	33			34	20		177		AIR CURTAIN (#85) ***
HOOD CONTROLS (#4)			1800	20	35			36	2			177	
SUB-PANEL "LB6"	5827			100	37			38	70	6768			DISHWASHER (#27) ***
		6300			39			40			6768		
			5315	3	41			42	3			6768	
WATTS PER LINE	13590	13150	10985							11730	12116	11005	

TOTAL ØA 25,320 ØB 25,266 ØC 21,990
SUB-TOTAL 72,576
LM (125%) ---
LCL (125%) 670
TOTAL LOAD 73,246 WATTS AT 120/208 V.,3Ø, 4W.= 203 A.

** PROVIDE LOCKABLE C.B.'S ON LIGHTING CIRCUITS SUPPLYING EMERGENCY UNIT EQUIPMENT
*** PROVIDE LOCKABLE C.B.'S ON DIRECT CONNECT APPLIANCES PER CEC 422.31 (B)

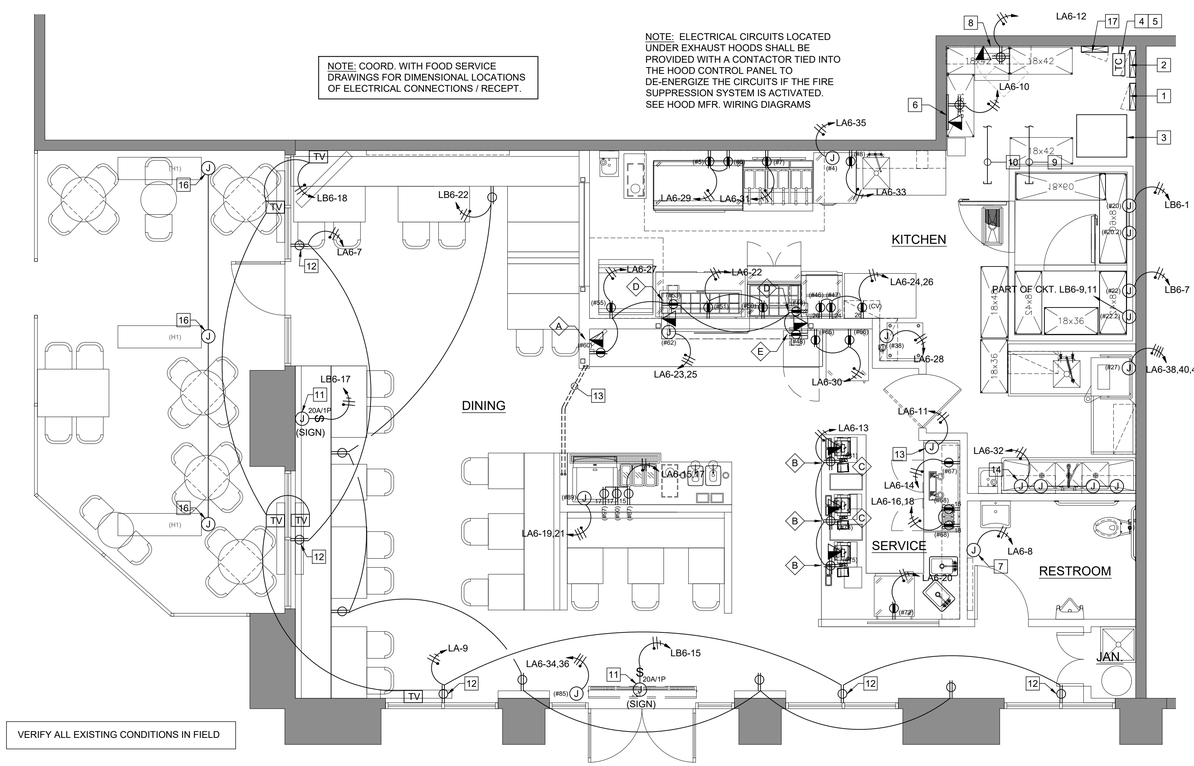

NOTE:
RECEPTACLE COVER COLORS SHALL BE BE COORDINATED WITH THE WALL FINISH WHICH THEY ARE LOCATED.
1. BLACK COVERS ON BLACK SURFACES
2. STAINLESS STEEL COVERS ON ORANGE TILE SURFACES
3. WHITE COVERS ON WHITE WALLS

LOW VOLTAGE KEY NOTES:

- (A) MOUNTED POS TERMINAL (NO CASH DRAWER) W/ PRINTER & MOUNTED PHONE (+54" A.F.F.)
- (B) POS TERMINAL W/ CASH DRAWER & PRINTER
- (C) CORDLESS PHONE UNDER STAINLESS STEEL COUNTER
- (D) BACK OF HOUSE PRINTER @ KITCHEN SIDE
- (E) EXPO PRINTER

KEY NOTES:

1. (E) PANELBOARD "A6" - 277/480V,3Ø, 4W - 200 AMPS (RELOCATED BY LANDLORD UNDER SEPARATE PERMIT)
2. (E) PANELBOARD "LA6" - 120/208V, 3Ø, 4W - 400 AMPS (RELOCATED BY LANDLORD UNDER SEPARATE PERMIT)
3. (E) 150KVA TRANSFORMER (FLOOR MOUNTED) 480V PRIMARY - 208Y/120 SECONDARY (RELOCATED BY LANDLORD UNDER SEPARATE PERMIT)
4. TIMECLOCK FOR INTERIOR LIGHTING - ELECTRONIC 7-DAY, 24HR PROGRAMMABLE (VERIFY LOCATION)
5. TIMECLOCK FOR EXTERIOR SIGN(S) - 7-DAY ASTRONOMICAL, PROGRAMMABLE (VERIFY LOCATION)
6. TELEPHONE BACKBOARD (VERIFY LOCATION & HEIGHT)
7. POWER FOR HAND DRYER - COORD. W/ ARCH'L. DWGS. FOR HEIGHT & LOCATION
8. AUDIO / VIDEO RACK - LOWELL LWR-1623; WALL MOUNT HIGH ON WALL ABOVE KITCHEN STORAGE RACK & CENTER QUAD. RECEPT / DATA IN OPEN BACK OF RACK (VERIFY MOUNTING HEIGHT IN FIELD)
9. LL PROVIDED 2" CONDUIT STUB W/ PULL ROPE FROM M.P.O.E. FOR TENANT TELEPHONE (V.I.F.)
10. LL PROVIDED 1" CONDUIT STUB W/ PULL ROPE FROM FIRE ALARM TERMINAL CABINET FOR TENANT FIRE ALARM (V.I.F.)
11. (E) EXTERIOR SIGN J-BOX (V.I.F.) - SIGNAGE UNDER SEPARATE PERMIT
12. RECEPTACLE 18" MAX. ABOVE WINDOW
13. CONDUITS BELOW CONC. FLOOR SLAB AS REQ'D. FOR POWER TO BEVERAGE EQUIPMENT
14. POWER FOR TANKLESS WATER HEATER CONTROLS (V.I.F.)
15. REMOTE CONTROLLER FOR PATIO HEATERS - VERIFY W/ OWNER FOR MOUNTING LOCATION OF UNITS.
16. J-BOX @ SUSPENDED PATIO HEATER W/ CONDUIT TO REMOTE CONTROLLER LOCATION FOR LOW VOLTAGE CONTROLS
17. (N) PANELBOARD "LB6" - 120/208V, 3Ø, 4W - 100 AMPS

ELECTRICAL LEGEND

$	TOGGLE SWITCH 48" A.F.F. U.O.N.
	DUPLEX RECEPTACLE 18" A.F.F. U.O.N.
	GFCI DUPLEX RECEPTACLE 18" A.F.F. U.O.N.
	QUADRUPLEX RECEPTACLE 18" A.F.F. U.O.N.
	DUPLEX RECEPTACLE CEILING MOUNTED
	208V RECEPTACLE 18" A.F.F. U.O.N.
J	JUNCTION BOX
	TELEPHONE/DATA OUTLET 3/4"C. & PULL STRING ABOVE CEILING 18" A.F.F. U.O.N.
	ELECTRICAL DISCONNECT
TC	ELECTRONIC TIMECLOCK PROGRAMMABLE, 7 DAY
TV	RECESSED T.V. CABLE BOX 2 GANG - POWER / L.V. COMBINATION. (COORD. HEIGHT/LOCATION W/ INT. DESIGNER)

0' 2' 4'
SCALE: 1/4" = 1'-0"

CITY STAMP

1 POWER PLAN

SCALE: 1/4"=1'-0"

LICENSED ARCHITECT KAREN L. BAKER No. C28547 REN. 6-19 STATE OF CALIFORNIA
BAKER [b] [a] architecture
4080 CENTRE ST, STE #203
SAN DIEGO, CA 92103 TEL.
(619) 281-5937
www.bakerarchitecture.com

REVISION SCHEDULE			
REV	DATE	BY	DESCRIPTION
1	05.29.18	--	BLDG. DEPT. PLAN CHECK

PROJECT # 17XXX

BURGER LOUNGE III LLC
FOUNTAINS AT ROSEVILLE
1198 ROSEVILLE PKWY. #135 - ROSEVILLE, CA 95678

DATE: 04/06/18

E2.0

THESE DRAWINGS AND SPECIFICATIONS ARE CONFIDENTIAL AND SHALL REMAIN THE SOLE PROPERTY OF BAKER ARCHITECTURE, WHICH IS THE OWNER OF COPYRIGHT IN THIS WORK. THEY SHALL NOT BE REPRODUCED (IN WHOLE OR IN PART), SHARED WITH THIRD PARTIES OR USED IN ANY MANNER ON OTHER PROJECTS OR EXTENSIONS TO THIS PROJECT WITHOUT THE PRIOR WRITTEN CONSENT OF BAKER ARCHITECTURE.

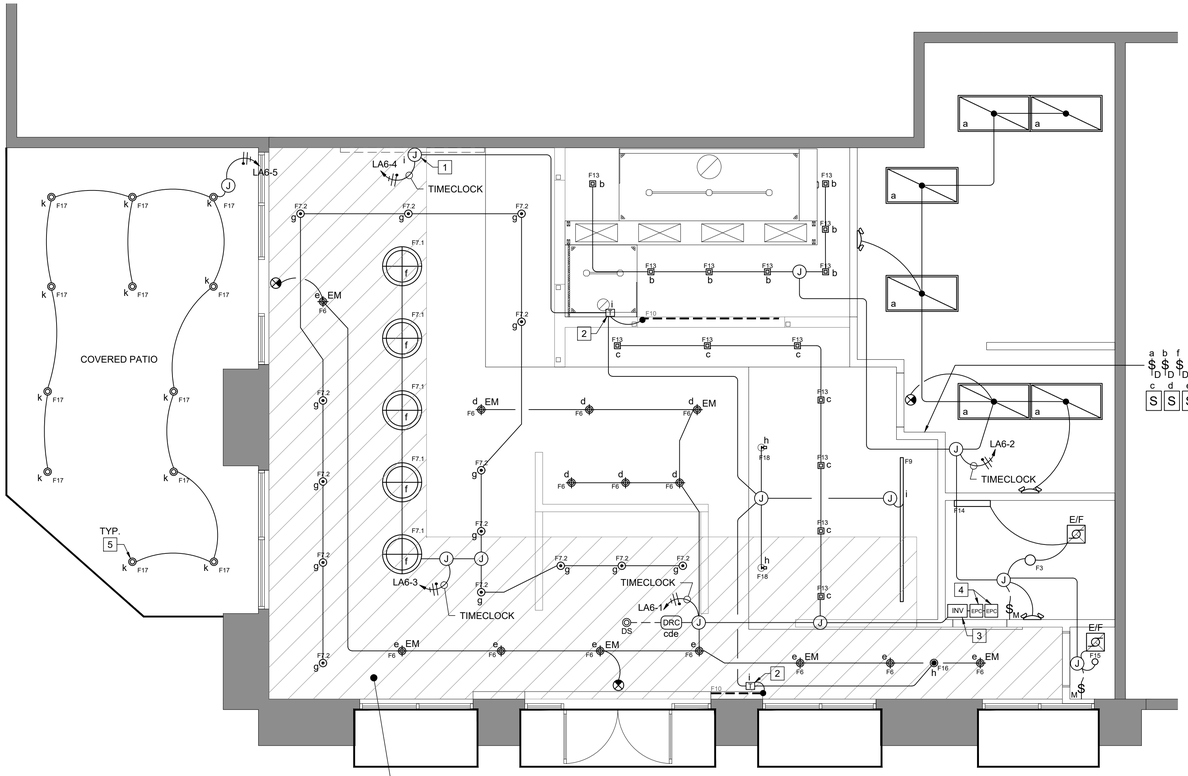

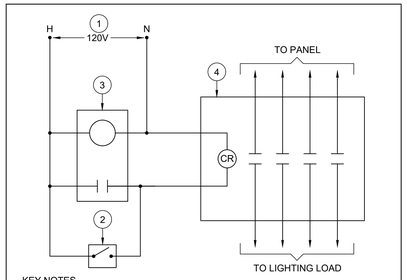

KEY NOTES

1. CONNECT TO NEAREST 120V BRANCH CIRCUIT (FIELD VERIFY)
2. 2HR OVERRIDE SWITCH WITH SPRING WOUND (VERIFY LOCATION)
3. 365 DAY PROGRAMMABLE TIME CLOCK WITH WEEKEND & HOLIDAY SHUT-OFF FEATURE WHICH TURNS OFF ALL LOADS FOR AT LEASE 24 HOURS THEN RESUMES NORMAL SCHEDULED OPERATION & 10 HOUR MIN. PROGRAM BACK-UP IF POWER IS INTERRUPTED.
4. MULTI-POLE LIGHTING RELAY WITH N.O. CONTACTS AND 120V CONTROL COIL (AS NOTED ON PANEL SCHEDULES (VERIFY # OF POLES)

LIGHTING CONTROL DIAGRAM

LIGHTING CONTROLS

$	TOGGLE DECORA STYLE
$D	DIMMER DECORA (OR EQUAL)
$M	P.I.R. OCCUPANCY WATT STOPPER PW-100-24
$O/R	LTG. CONTROLLER OVERRIDE SPRING WOUND - 2 HOUR
$T	TIMER WALL SWITCH LEVITON DECORA #VPT24-1F 24HR PROGRAMMABLE ASTRONOMICAL TIME SWITCH 48" A.F.F. U.O.N.
TC	ELECTRONIC TIMECLOCK INTERMATIC ET2700 SERIES OR EQUAL PROGRAMMABLE: 7/365 DAY - 2hr OVERRIDE
DRC	ON/OFF/0-10V DIMMING ROOM CONTROLLER WATT STOPPER LMRC-210 SERIES 1 - 3 RELAYS PER CONTROLLER - 20A (USE COMPATIBLE LV DIMMER SWITCH)
DS	DIGITAL PHOTOSENSOR WATT STOPPER LMLS-400 1 ZONE SWITCHING & DIMMING CLOSED LOOP
S	L.V. DIMMING WALL SWITCH WATT STOPPER LMDM-101

LIGHT FIXTURE SCHEDULE

TYPE	SYMBOL	DESCRIPTION
F2		24"x48" RECESSED TROFFER: (KITCHEN) NORA LIGHTING #NPD-E24-30A LAMP: LED 59.5W (5000 LUMENS) QTY: 6 FIXTURES
F3		SURFACE MOUNT: (RESTROOM) WAC LIGHTING #FM-4111-30-BN LAMP: LED 31W (1635 LUMENS) QTY: 1 FIXTURES
F6		PENDANT TUBE: (DINING) WAC LIGHTING #DS-PD-05-N-F-930-WT LAMP: LED 24W QTY: 14
F7.1		PENDANT: (DINING) FETT BY TECH LIGHTING (PER I.D. SPECS) LAMP: LED 12W QTY: 5
F7.2		PENDANT: (DINING AREA) YLIGHTING (PER I.D. SPECS) LAMP: INCAN. (60W MAX.) QTY: 14 FIXTURES
F9		8' LINEAR WALL WASHER: (MENU BOARD) LUMIUM LIGHTING #TI2-RAM-LED-30K-M-8-U-10D-SC-MF-MA-4ACPF-6-WF LAMP: LED 64W QTY: 1 FIXTURE
F10		LED TAPE STRIP: (PASS-THRU ACCENT) NORA LIGHTING #NUTP5-W16LED930 / NMTD-60-24D LAMP: LED - 3W/FT (20LF MAX. EA. FIXTURE) 24V TRANSFORMER OUTPUT: 60W QTY: 2 (VERIFY W/ I.D. DWGS.)
F13		4" SQUARE RECESSED: (DINING & SERVICE AREA) NORA LIGHTING #NHIC-4LMRAT / NLCBC-45630WW LAMP: LED - 11W QTY: 14 FIXTURES
F13A		4" SQUARE RECESSED W/ ADJUSTABLE HEAD & TRIM: (DINING AREA) NORA LIGHTING #NHIC-4LMRAT / NLCBC-45630WW LAMP: LED - 11W QTY: 0 FIXTURES
F14		LED TAPE IN EXTRUDED CHANNEL: (RESTROOM VANITY MIRROR) DIODE LED CHROMAPATH #DI-CPCHA-SQ48 LAMP: LED - 3W/FT (3LF EA. FIXTURE) QTY: 2 FIXTURES 12V TRANSFORMER OUTPUT: 60W QTY: 1 (1 TRANSFORMER EA. RESTROOM)
F15		RECESSED: (MOP SINK CLOSET) NORA LIGHTING (PER I.D. SPECS.) LAMP: LED 11W QTY: 1
F16		PENDANT SPOT LIGHT: (DINING AREA GRAPHIC WALL) TECH LIGHTING #700-MP-ISO-830-30-18-S-LED LAMP: LED - 16W QTY: 1 FIXTURES
F17		PENDANT: (DINING PATIO) WAC LIGHTING #PD-W2605-BK LAMP: LED - 16W QTY: 12 FIXTURES
F18		PENDANT SPOT LIGHT: (DINING AREA SIGNAGE) WAC LIGHTING (PER I.D. SPECS.) LAMP: LED 3W QTY: 2 FIXTURES
X2		EDGELIT LED ILLUMINATED EXIT SIGN: MCPHILBEN #ER44RLDU1G DIRECTIONAL CHEVRONS AS INDICATED ON PLAN (90 MIN. EM BATTERY BACK-UP POWER SUPPLY) QTY: 3 FIXTURES
X1		DUAL HEAD EMERGENCY LIGHT ISOLITE #RL2LED-2-WH (90 MIN. EM BATTERY BACK-UP POWER SUPPLY) QTY: 3 FIXTURES

KEY NOTES:

1. BACKLIT LED INTERIOR SIGN - COORD. W/ INTERIOR DESIGN
2. TRANSFORMER FOR LED TAPE ACCENT LIGHTING UNDER PASS-THRU SHELF - COORD. W/ INT. DESIGN & FOOD SERVICE
3. EMERGENCY LIGHT INVERTER - 250 WATT
   EVENLITE PURE WAVE PW-25-LC-V1
   (90 MIN. INTERRUPTIBLE POWER SUPPLY)
   VERIFY MOUNTING LOCATION
   LIGHT FIXTURES CONNECTED:
   F6 - QTY. 7 @ 24W = 168 W
   TOTAL CONNECTED LOAD: 168W
4. EMERGENCY LIGHTING TRANSFER DEVICE
   EVENLITE EPC-PM
   1 REQ'D. FOR EACH SWITCHED ZONE CONTAINING EMERGENCY LIGHTS
5. EXTERIOR PATIO LIGHTS ATTACHED TO STEEL AWNING STRUCTURE BY OTHERS UNDER SEPARATE PERMIT - COORD. LIGHTING ATTACHMENT WITH AWNING DESIGNER.

EGRESS LIGHTING NOTES:

1. THE MEANS OF EGRESS ILLUMINATION SHALL NOT BE LESS THAN 1 FOOT CANDLE AT THE WALKING SURFACE LEVEL.
2. EMERGENCY LIGHTS SHALL BE PROVIDED IN ALL MEANS OF EGRESS AS DEFINED IN SECTION 1006.3
3. THE EMERGENCY LUMINAIRES SHALL PROVIDE AN INITIAL AVERAGE ILLUMINATION OF AT LEAST 1 FOOT CANDLE BUT AT ANY POINT IT SHALL NOT BE LESS THAN 0.1 FOOT CANDLE ALONG THE PATH OF EGRESS AT FLOOR LEVEL.
4. THE EMERGENCY ILLUMINATION LEVEL SHALL HAVE A MAXIMUM TO MINIMUM EMERGENCY ILLUMINATION UNIFORMITY RATIO THAT DOES NOT EXCEED 40 TO 1
5. EMERGENCY EXIT ILLUMINATION SHALL BE SUPPLIED FROM ONE OF THE FOLLOWING: GENERATOR, STORAGE BATTERY, UPS, FUEL CELL W/ STORAGE BATTERY OR UNIT EQUIPMENT.

CITY STAMP

0' 2' 4'
SCALE: 1/4" = 1'-0"

1 LIGHTING PLAN

SCALE: 1/4"=1'-0"

THESE DRAWINGS AND SPECIFICATIONS ARE CONFIDENTIAL AND SHALL REMAIN THE SOLE PROPERTY OF BAKER ARCHITECTURE, WHICH IS THE OWNER OF COPYRIGHT IN THIS WORK. THEY SHALL NOT BE REPRODUCED IN WHOLE OR IN PART, SHARED WITH THIRD PARTIES OR USED IN ANY MANNER ON OTHER PROJECTS OR EXTENSIONS TO THIS PROJECT WITHOUT THE PRIOR WRITTEN CONSENT OF BAKER ARCHITECTURE.

LICENSED ARCHITECT
KARSONE BAKER
No. C28547
REN. 6-19
STATE OF CALIFORNIA

BAKER [b] [a] architecture
4080 CENTRE ST, STE #203
SAN DIEGO, CA 92103 TEL.
(619) 281-5937
www.bakerarchitecture.com

REVISION SCHEDULE

REV	DATE	BY	DESCRIPTION
1	05.29.18	-	BLDG. DEPT. PLAN CHECK

PROJECT # 17XXX

BURGER LOUNGE III LLC
FOUNTAINS AT ROSEVILLE
1198 ROSEVILLE PKWY. #135 - ROSEVILLE, CA 95678

DATE: 04/06/18

E3.0

Pure Wave

PW Series

Pure Sine Wave Inverter Technology

Standard Transfer System

CATCH THE WAVE

The Pure Wave inverter delivers a sine wave identical to the output of a utility, in some cases even superior to it because of reduced THD (total harmonic distortion). By replicating utility power, pure sine wave inverters with high crest factors assure compatibility for all LED, Fluorescent, and Incandescent Lighting loads.

Evenlite's PW mini is packed with cutting edge features including our unique **Advanced Startup Diagnostics** which protects the unit at initial startup by performing several checks for common installation errors. **UL-924 approved Self-Testing and Self-Diagnostics** with 16 distinct input and minor alarms, three distinct field selectable output types, low battery voltage indication. Coupled with options like Infrared receiver for remote testing, time delay for HID applications and a sonic alarm, the PW Mini is unlike any inverter in it's class.

Features

- Pure Sine Wave output-compatible with all lighting loads
- UL 924 approved Self-Testing/Self-Diagnostics with easy to read LED display
- Very high, 2.5 X overload rating ensures that even the most demanding loads will start up
- Three distinct output types for field flexibility
- Small foot-print fits easily in electrical room or closet, or can be recessed in the wall or ceiling
- No factory startup required
- Tested and listed to U.L. 924 and Canadian Standard C22.2 No. 141-10
- 10 year valve regulated maintenance free Lead Calcium battery
- New York City approved, Calendar Number 51575

NYC MEA compliant for Levels 1&2

EVENLITE
LIFE SAFETY LIGHTING SOLUTIONS
2575 Metropolitan Drive, Trenose, PA 19053 • USA
TEL: (800) 872 0879 - FAX:(215) 244 4208 - www.evenlite.com

Project name:	Approved By:
Catalog No:	Type No:

Pure Wave Sine Wave Inverter

Specifications

INPUT

Voltage:	120 or 277 VAC Model dependant
Current:	1.4A(120V), 0.6A(277V) for 125 Watt Model 2.7A(120V), 1.2A(277V) for 250 Watt Model
Frequency:	60Hz +/- 2 Hz
Protection:	PCB mounted fast acting 5x20 mm fuse
Power Factor:	0.5 Lead to 0.5 Lag

Battery

Type:	Valve-Regulated Sealed Lead Calcium
Charger:	3 rate with Temperature Compensation
Recharge Time:	24 Hour recharge standard
Runtime:	90 Minutes at 25 deg. C, 2-hour option available
Protection:	Automatic Low Voltage Disconnect (LVD) set at 1.67 VPC
DC Voltage:	12/24 VDC Nominal, 2.27 VPC float, temperature compensated
DC Current:	12.5A nominal for 125/250 Watt model respectively

OUTPUT:

Voltage:	120 or 277 VAC model dependant
Current:	1.04A (120V), 0.45A (277V) for 125 Watt Model, 2.08A (120V), 0.9A (277V) for 250 Watt Model
Frequency:	60Hz +/- 0.02 Hz crystal controlled during emergency mode
Overload:	110 percent will generate overload fault
Transfer Time:	50 msec
Output Distortion:	Less than 3% THD
Crest Factor:	2.5 for 125 and 250W models
Load Power Factor:	0.5 lead to 0.5 lag
Output Types:	Normally On, Normally Off and Switched Outputs

Environmental

Operating Temp:	20 to 30 degrees Centigrade
Storage Temp:	-20 to 70 degrees Centigrade (Electronics)
Storage Temp:	0 to 40 degrees Centigrade (Batteries)
Ielative Humidity:	<95 % (non-condensing)

Physical

Cooling:	Natural convection- No fans
Cabinet:	NEMA Type 1 enclosure, 18 ga. powder coated Cold Rolled Steel

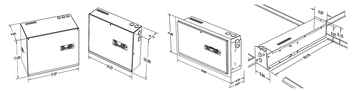

ORDERING GUIDE

PW					
Model	**VA Rating**	**Battery Type**	**Input/Output Voltage**	**Options**	
PW	12 12 VA 25 250 VA	LC Lead Calcium	V1 120/120 VAC V2 277/277 VAC	AA Audible Alarm CL Listed to CSA C22.2 No. 141-10 IR Infrared Receiver for Remote Testing RT Remote Test Switch and Monitor (includes buzzer, IR receiver, test buttons and SD indicator) TLRT Infrared Remote Hand Held Transmitter (order separately) RE Recessing Frame for Wall Recessed (12D watt only) TB T-Bar mount housing (12D watt only) TD 15 Minute Time Delay 2H 2 Hour Run Time (Capacity reduced to 150 watt and 200 watt models) SP Pre-Shipped Less Battery	

Example: PW-25-LC-V2-TD

EVENLITE
LIFE SAFETY LIGHTING SOLUTIONS
2575 Metropolitan Drive • Trenose, PA 19053 • USA
Tel: (800) 872-0879 • Fax: (215) 244-4208
www.evenlite.com

PW 3/15

Central Inverter with EPC-PM

Single Zone Switched Lighting Loads

Shows Emergency and Non-Emergency Lights on same zone

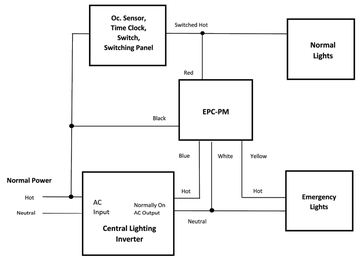

Operation:

Emergency Lights can be turned On/Off with the Red Signal Wire. Black Wire is the sense for EPC-PM internal relay control. Red or Black wires do not carry load current – Load Current is carried on Blue and Yellow through EPC-PM relay closure. Upon power loss, EPC-PM will connect Inverter AC Output to Emergency Lights independent of the Red control wire.

Emergency Lighting Transfer Device

Central Power Systems

Evenlite's emergency lighting transfer device allows the user to provide emergency backup power to switched fixtures. Backup power from a Pure Wave or Lite-Minder inverter can be routed thru the emergency transfer device to the fixtures from both the utility supply and the backup power to provide the ability to switch fixtures off for energy saving when not in use, yet have reliable backup power available during power outages.

The emergency lighting transfer device is available for mounting in a j-box in the ceiling (EPC-PM), or for mounting in the fixture ballast channel, or j-box (EPC-A).

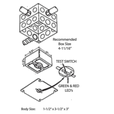

In-Fixture Installation
Modern Ballast Channels

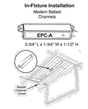

MODEL EPC-PM WIRING DIAGRAM

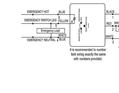

EVENLITE
LIFE SAFETY LIGHTING SOLUTIONS
2575 Metropolitan Drive, Trenose, PA 19053 • USA
TEL: (800) 872 0879 - FAX:(215) 244 4208 - www.evenlite.com

Project name:	Approved By:
Catalog No:	Type No:

Emergency Lighting Transfer Device

FEATURES

- The EPC-PM easily installs in a 4-11/16" j-box
- The EPC-PM is provided with red and green LED indicators, green indicates utility power is present and red indicates emergency power is present
- Failsafe operation, with built in surge protection
- Energy savings realized by switching fixtures off when not in use
- Emergency backup power provided on failure of normal utility power regardless of wall switch position
- A momentary test switch allows the user to test the EPC-PM as required
- Compatible with Pure Wave and Lite-Minder Sine Wave Inverter Systems
- Compatible with dimming systems and occupancy sensors
- The EPC-A is UL listed for field installation in the fixture ballast channel
- A green LED is provided to indicate that utility power is present
- Allows the room fixture to be switched off when not in use for energy savings
- Dedicated emergency luminaires stay on for an additional 2.5 seconds after being turned off to indicate that the emergency power source is available
- Both devices are completely maintenance free
- Operating temperature range for both devices is 0°C to 60°C
- Both devices are UL 924 listed
- Three year limited warranty

MULTIPLE EPC ON A 20 AMP BREAKER

Model EPC-A Fixture Mount Installation Instructions

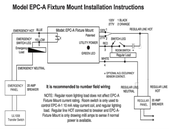

ORDERING GUIDE

EPC		
Model	**Mounting**	**Input/Output Voltage**
EPC Emergency Power Control	A* Fixture Mount PM Plenum Mount (Specify Voltage)	V1 120/120 VAC V2 277/277 VAC * EPC-A is 120/277 VAC field selectable

Example: EPC-PM

EVENLITE
LIFE SAFETY LIGHTING SOLUTIONS
2575 Metropolitan Drive • Trenose, PA 19053 • USA
Tel: (800) 872-0879 • Fax: (215) 244-4208
www.evenlite.com

EPC 11/15

WATTSTOPPER® | DIGITAL LIGHTING MANAGEMENT | LOAD CONTROLLERS | legrand®

ON/OFF/0-10 VOLT DIMMING ROOM CONTROLLERS | LMRC-210 SERIES

Plenum-rated controllers with line voltage relay(s) and 0-10 volt dimming output(s)

120/230/240/277 volt and 347 volt models

Plug to other components using Cat 5e cables with RJ45 connectors eliminating wiring errors

Plug-n'Go automatic configuration for maximum energy efficiency

Store load preset level and 16 scene preset levels for each load

Support energy saving manual-on, bi-level, tri-level and dimming control strategies

Description

LMRC-210 Series Digital Room Controllers include one, two or three relay(s) to switch a total of 15 or 20 amps, a high-efficiency switching power supply and one 0-10 volt output per relay for control of dimmable loads including electronic ballasts (Advance Mark 7, or equivalent). They are the foundation of a Wattstopper Digital Lighting Management (DLM) system, and allow integration of occupancy sensors, daylighting controls and switches for energy-efficient lighting control.

Operation

LMRC-210 Series Room Controllers operate on one 120, 230, 240, or 277 volt, 20 amp, or 347 volt, 15 amp, feed and provide Class 2 power to sensors and switches via the DLM local network. Once powered up, Plug-n'Go automatically configures system components for the most energy-efficient operation. The room controllers then dim or switch lighting or motor loads in response to input from the communicating devices. When a dimming input is received, the relay switches on when the dimmed level rises above zero, and off when it reaches zero, to coordinate control of power and the 0-10 volt signal to the load. They also monitor the current draw of the total connected load. Each room controller stores up to 16 scene preset levels for each dimmed output.

Room controllers built starting Q3 of 2012 include circuity to open their 0-10V signal on loss of LMRC's power, so any separately powered ballast or driver connected to those 0-10V wires will go to full brightness.

Plug-n'Go Automatic Configuration

DLM room controllers manage Plug-n'Go automatic system configuration, which establishes functionality based on the installed components. When room controllers are connected only to occupancy sensors, the system defaults to automatic on/off operation. If a wall switch is added to a system with one load, the load defaults to manual-on/automatic-off operation. If there is a wall switch and multiple loads, load one turns on automatically, while additional loads default to manual-on control; all loads turn off automatically. At system startup, default dimming parameters are established including: levels for scene presets 1-4; fade times; and fade and ramp rates. Dimming and system parameters may be customized using Push-n'Learn.

Applications

LMRC-210 Series Room Controllers are ideal for single or multiple zone on/off or dimming lighting control applications. They are appropriate for applications in private offices, open offices, conference rooms and classrooms in any commercial building. LMRC-210 Series Room Controllers also help facility managers who want to track building power usage by monitoring current for lighting or other loads. A network bridge (LMBC-300) is required to expose DLM local network power data readings to a Segment Manager or BAS.

PROJECT:	LOCATION/ TYPE:

WWW.LEGRAND.US/WATTSTOPPER

legrand®

Features

- Plug-n'Go® automatic configuration for quick installation and maximum energy savings
- Push-n'Learn™ functionality for personalization without the need for tools or a PC
- Digital Lighting Management components plug together on a free-topology Cat 5e DLM local network
- On/Off/Dim local override button for each load
- LED indicates status of each load
- 0-10V signal opens on loss of LMRC power
- Integral current monitoring of total connected load
- Optional lamp burn in; 12 or 100 hours
- 4 RJ45 ports with integral strain relief
- Zero-crossing circuitry for each relay for reliability and increased product life
- UL 2043 plenum rated
- The product meets the materials restrictions of RoHS
- BAA/TAA-compliant models available

Specifications

- Voltage: Single Phase 120/230/240/277VAC or 347VAC; 50/60Hz
- Maximum 20A combined load per Room Controller; each relay rated for: @ 120/277V, 20A ballast or incandescent or 1Hp motor load; @ 347V, 15A ballast only
- Class 2 dimming control signal: 0-10VDC, sinks up to 100mA per channel for control of compatible ballasts (50 if each source 2mA)
- Class 2 output to DLM local network: 24VDC, up to 250mA across 4 RJ45 ports
- DLM local network parameters:
  - Maximum current: 800mA
  - Category 5e cable: 150' per device to 1,000' max.
  - Up to 64 loads
  - Up to 48 communicating devices
  - Maximum 4 LMPB-100, LMPL-101 or LMRC-100 Series Room Controllers
- Operating conditions: for indoor use only: @ 120/277V; 32-158°F (0-70°C), @ 347V 32-140°F (0-60°C); 5-95% RH, non-condensing
- UL (E101196) and cUL listed
- FCC part 15 compliant
- Five year warranty

Controls & Mounting

Controls and Dimensions

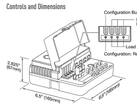

Mounting and Wiring

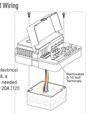

Mount to 4" x 4" x 2 1/8" deep electrical box. Depending on outputs used, a 4-square extension box may be needed. Connect to single 15A 24/7hl or 20A (1D) or 277hl circuit.

Load Parameter (for each dimmed output)	Default Setting	Available Options
High trim	100%	1-100%
Low trim	0%	0-99%
Preset level: Scenes 1-16	1: 100%, 2: 75%, 3: 50%, 4: 25%, 5-16: 100%	all: 0-100%
Preset fade time	2 seconds	0 seconds -18 hours
Lamp burn in time	0	0, 12 or 100 hours

WWW.LEGRAND.US/WATTSTOPPER

legrand®

Connecting

Sample Connection Diagram with Dimming Switches and Scene Control

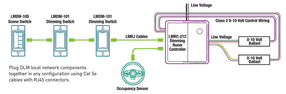

Ordering Information

Catalog #	Description	Single Phase Voltage 50/60Hz	Total Load Rating (any/all relays)* Ballast	Incan	Motor	Class 2 Outputs
☐ LMRC-211	1 Relay Room Controller; 0-10V dimming	120/230/240/277VAC	20A	20A	1 Hp	24VDC, 250mA and 0-10VDC
☐ LMRC-211-347	1 Relay Room Controller; 0-10V dimming	347VAC only	15A	-	-	
☐ LMRC-212	2 Relay Room Controller; 0-10V dimming	120/230/240/277VAC	20A	20A	1 Hp	
☐ LMRC-212-U	2 Relay Room Controller; 0-10V dimming, BAA/TAA compliant*					
☐ LMRC-212-347	2 Relay Room Controller; 0-10V dimming	347VAC only	15A	-	-	
☐ LMRC-213	3 Relay Room Controller; 0-10V dimming	120/230/240/277VAC	20A	20A	1 Hp	
☐ LMRC-213-U	3 Relay Room Controller; 0-10V dimming, BAA/TAA compliant*					
☐ LMRC-213-347	3 Relay Room Controller; 0-10V dimming	347VAC only	15A	-	-	
☐ LMRC-CA	Conduit Adapter for Low Voltage Connections					

*Product is compliant with Buy American Act and Trade Agreement Act

WWW.LEGRAND.US/WATTSTOPPER

Pub. No. 33902 Rev. 11/2014

WATTSTOPPER® | FIXTURE SENSORS & CONTROLS | DAYLIGHTING SENSORS | legrand®

SINGLE ZONE SWITCHING AND DIMMING CLOSED LOOP DIGITAL PHOTOSENSOR | LMLS-400

Daylight responsive on/off, bi-level, tri-level or dimming control for one lighting zone

Extended tube model accommodates thicker ceiling materials

100 degree spatial response for optimal detection of ambient light level

Automatic calibration and configuration; optional hold off setting to maximize energy savings

Photodiode corrected to match the photopic response of the human eye

Can be calibrated in any daylight condition

Description

The LMLS-400 is a closed loop photosensor that measures the ambient light level in order to automatically switch or dim one zone of lighting. It is part of a Digital Lighting Management (DLM) system and sends light level signals to control loads connected to DLM on/off or dimming room controllers. The LMLS-400 has a photodiode with an extended range of 1-6,553 footcandles (fc), and photopic correction to mimic the human eye, for precise measurement of visible light.

Operation

The LMLS-400 operates on Class 2 power supplied to a DLM local network by one or more DLM room controllers. When there is one LMLS-400, Plug-n'Go® assigns load 1 to daylighting control. An LMCT-100 is used to assign additional loads, and assign loads to multiple photosensors. Following an automatic setup process, the LMLS-400 monitors the ambient light in the controlled space and works with the room controller(s) to maintain the desired light level. Wattstopper's exclusive control algorithm uses on/off or dimming setpoints and other control parameters to establish the correct light levels throughout the day regardless of changing daylight contribution.

Features

- Digital Lighting Management components plug together on a free-topology Cat 5e DLM local network
- Test mode override of programmed time delay allows easy verification of selected settings
- Load status verification allows confirmation and testing of controlled load
- Infrared (IR) transceiver for wireless configuration and control
- Compatible with DLM wall switches for manual override, if desired
- LED status indicators
- Mounting options for hard ceilings, dropped ceilings and suspended lighting fixtures
- Complies with California Title 24, Section 119 requirements
- The product meets the materials restrictions of RoHS
- BAA/TAA-compliant models available

Automatic Setup

After installation, the LMLS-400 measures the daylight and electric light levels in order to automatically calibrate itself and establish setpoints. This process may be initiated from the photosensor or a handheld LMCT-100 wireless configuration tool. The LMCT-100 may also be used to adjust setpoints and other parameters including hold off functionality. Adjustable switching parameters include on and off setpoints and time delays. The off setpoint can be adjusted to a value of 25, 50 (default), 75, or 100 percent above the on setpoint. Adjustable dimming parameters include day and night setpoints, ramp up and down rates, and a cut-off time delay. Electric lights can be turned off (default) or dimmed to a user-selectable minimum level when daylight contribution is abundant.

Applications

The LMLS-400 photosensor is recommended for use in private offices, cafeterias, classrooms, atriums, lobbies and perimeter spaces with daylight contribution. It is designed to sense both daylight and electric light, and is typically ceiling mounted for sidelighting applications.The LMLS-400 can be used for on/off switching, bi-level or tri-level step switching or step dimming, or continuous dimming.

PROJECT:	LOCATION/ TYPE:

WWW.LEGRAND.US/WATTSTOPPER

legrand®

Specifications

- Input voltage: 24VDC from DLM local network
- Current consumption: 7mA
- DLM local network connection: 1 RJ45 port
- Digital multi-band photodiode with extended range: 1-6,553 fc (10-70,536 lux)
- Spatial response: 100°
- LED status and configuration indicators
- Infrared (IR) transceiver
- Weight: 1.4 oz (40 g)
- Operating conditions: for indoor use only; 32-131°F (0-55°C); less than 90% RH, non-condensing
- UL and cUL listed
- FCC part 15 compliant
- Five year warranty

Dimensions & Mounting

Product Dimensions

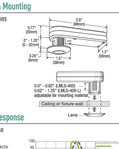

Placement for Sidelight Applications

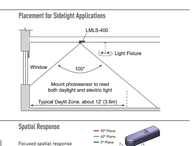

Photodiode Response

Spectral Response

The photodiode detects just visible light, which ensures accurate lighting control.

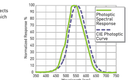

Spatial Response

Focused spatial response allows accurate detection of ambient light without interference from direct daylight or electric light sources.

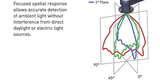

Connecting

Sample Connection Diagram for On/Off Switching Application

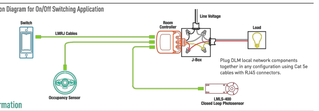

Ordering Information

Catalog #	Description
☐ LMLS-400	Digital Single Zone On/Off and Dimming Closed Loop Photosensor
☐ LMLS-400-U	Digital Single Zone On/Off and Dimming Closed Loop Photosensor, BAA/TAA compliant*
☐ LMLS-400-L	Digital Single Zone On/Off and Dimming Closed Loop Photosensor with extended tube
☐ LMLS-MB1	Photosensor mounting bracket for J-box mounting
☐ LMLS-MB2	Photosensor mounting bracket for wall mount applications
☐ LMCT-100	Digital Wireless Configuration Tool

*Product is compliant with Buy American Act and Trade Agreement Act

WWW.LEGRAND.US/WATTSTOPPER

Pub. No. 31385 Rev. 1/2014

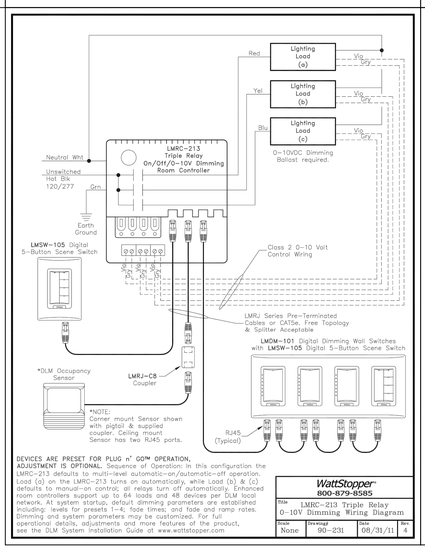

WATTSTOPPER® | DIGITAL LIGHTING MANAGEMENT | PERSONAL CONTROLS | legrand®

DIMMING WALL SWITCH | LMDM-101

Low voltage switch for control of dimmable loads

Component of Digital Lighting Management integrated control system

Plugs to other components using Cat 5e cables with RJ45 connectors eliminating wiring errors

LED bar graph indicates relative light level of controlled load

Active Dim feature enables temporary adjustment of any selected load

Plug-n'Go automatic configuration and Push-n'Learn for personalization

Description

The LMDM-101 Dimming Wall Switch is a low voltage device for dimming control of one or more lighting loads. It is part of a Digital Lighting Management (DLM) system and can dim load(s) connected to DLM dimming room controllers and switch load(s) connected to DLM on/off room controllers.

Operation

The LMDM-101 operates on Class 2 power supplied to a DLM local network by one or more room controllers. Plug-n'Go automatic configuration assigns all loads connected to dimming room controllers to the dimming switch upon system startup. When multiple switches are installed, default operation is for multi-way control; each switch controls all of the loads on the system. Dimming switches may be reconfigured using Push-n'Learn to control only selected loads. The LMDM-101 may be used to raise or lower light levels, recall a preset level and turn lights on or off. In Active Dim mode, users can temporarily adjust the level of any dimmable load or scene on the local network by selecting a load or scene button and then pressing and holding the paddle on the LMDM-101.

Features

- Hidden configuration button for easy access to Push-n'Learn
- Used with DLM dimming room controller
- Digital Lighting Management components plug together on a free-topology Category 5e DLM local network
- Provides full function dimming control in multi-way applications, such as 3-way, 4-way, and beyond
- Infrared (IR) transceiver for wireless configuration and control
- LED status indicator
- Sleek single gang device fits decorator wall plates
- Six color options and custom engraving options; standard buttons may be replaced in the field
- The product meets the materials restrictions of RoHS
- BAA/TAA-compliant models available

LED Indicators and IR Communications

A single blue LED shows the on/off status of the load(s) assigned to the dimming switch. An LED array in the bezel of the switch tracks progress of a fade and indicates the output level to the load. Each dimming switch may be personalized in the field with custom-engraved buttons. The IR transceiver in the LMDM-101 allows two-way communication for both wireless configuration, using Push-n'Learn and a wireless configuration tool, and system operation, using handheld remotes.

Applications

The LMDM-101 is ideal for use in applications where dimming control is desired, such as conference and board rooms, classrooms, training centers and private offices. Used together with the LMSW-105 DLM Scene Switch, the LMDM-101 works as part of a flexible scene-based preset dimming system. Digital Lighting Management's Active Dim feature gives designers the option of reducing wall clutter by facilitating scene setting without the need for individual dimming switches for each load.

PROJECT:	LOCATION/ TYPE:

WWW.LEGRAND.US/WATTSTOPPER

legrand®

Specifications

- Input voltage: 24VDC from DLM local network
- Current consumption: 5mA
- DLM local network connection: 2 RJ45 ports
- Control button with LED status indicator
- 7-LED dimming level indicator
- Hidden configuration button for access to Push-n'Learn mode
- Infrared (IR) transceiver
- Operating conditions: for indoor use only; 32-131°F (0-55°C); 5-95% RH, non-condensing
- UL and cUL listed
- FCC part 15 compliant
- Five year warranty

Controls & Dimensions

Controls

Dimensions

Mounting & Connecting

Mounting

Sample Connection Diagram with 0-10 Volt Dimming

Ordering Information

Catalog #	Color	Description
☐ LMDM-101-W	White	1-Button Dimming Wall Switch
☐ LMDM-101-W-U	White	1-Button Dimming Wall Switch, BAA/TAA compliant*
☐ LMDM-101-LA	Light Almond	1-Button Dimming Wall Switch
☐ LMDM-101-I	Ivory	1-Button Dimming Wall Switch
☐ LMDM-101-I-U	Ivory	1-Button Dimming Wall Switch, BAA/TAA compliant*
☐ LMDM-101-GI	Grey	1-Button Dimming Wall Switch
☐ LMDM-101-B	Black	1-Button Dimming Wall Switch
☐ LMDM-101-R	Red	1-Button Dimming Wall Switch

Switches do not include face plates. Order decorator style plate separately. *Product is compliant with Buy American Act and Trade Agreement Act.

WWW.LEGRAND.US/WATTSTOPPER

Pub. No. 30755 Rev. 07/2014

BAKER [b architecture a]
LICENSED ARCHITECT BARRY JOSEPH BAKER No. C28547 REN. 6-19 STATE OF CALIFORNIA
4080 CENTRE ST, STE #203
SAN DIEGO, CA 92103 TEL
(619) 281-5937
www.bakerarchitecture.com

THESE DRAWINGS AND SPECIFICATIONS ARE CONFIDENTIAL AND SHALL REMAIN THE SOLE PROPERTY OF BAKER ARCHITECTURE, WHICH IS THE OWNER OF COPYRIGHT IN THIS WORK. THEY SHALL NOT BE REPRODUCED IN WHOLE OR IN PART, SHARED WITH THIRD PARTIES OR USED IN ANY MANNER ON OTHER PROJECTS OR EXTENSIONS TO THIS PROJECT WITHOUT THE PRIOR WRITTEN CONSENT OF BAKER ARCHITECTURE.

REVISION SCHEDULE

REV	DATE	BY	DESCRIPTION
A	05.29.18	-	BLDG. DEPT. PLAN CHECK
B			
C			
D			
E			

PROJECT # 17XXX

BURGER LOUNGE III LLC

FOUNTAINS AT ROSEVILLE

1198 ROSEVILLE PKWY. #135 - ROSEVILLE, CA 95678

CITY STAMP

DATE: 04/06/18

E3.1

STATE OF CALIFORNIA
INDOOR LIGHTING
CEC-NRCC-LTI-01-E (Revised 04/18) — CALIFORNIA ENERGY COMMISSION
CERTIFICATE OF COMPLIANCE — NRCC-LTI-01-E
Indoor Lighting — (Page 1 of 6)
Project Name: BURGER LOUNGE — Date Prepared: MAR. 29, 2018

A. General Information

Climate Zone: 11	Conditioned Floor Area: 1,474 s.f. Unconditioned Floor Area:				
Building Type:	☒ Nonresidential	☐ High-Rise Residential	☐ Hotel/Motel		
☐ Schools	☐ Relocatable Public Schools	☒ Conditioned Spaces	☐ Unconditioned Spaces		
Phase of Construction:	☒ New Construction	☐ Addition	☐ Alteration		
Method of Compliance:	☐ Complete Building	☒ Area Category	☐ Tailored		
Project Address: 1198 ROSEVILLE PKWY. #135					

B. Lighting Compliance Documents (select yes for each document included)

For detailed instructions on the use of this and all Energy Efficiency Standards compliance documents, refer to the Nonresidential Manual published by the California Energy Commission.

YES	NO	COMP. DOC.	TITLE
●	○	NRCC-LTI-01-E	Certificate of Compliance. All Pages required on plans for all submittals.
●	○	NRCC-LTI-02-E	Lighting Controls, Certificate of Compliance, and PAF Calculation, All Pages required on plans for all submittals.
●	○	NRCC-LTI-03-E	Indoor Lighting Power Allowance
○	●	NRCC-LTI-04-E	Tailored Method Worksheets
○	●	NRCC-LTI-05-E	Line Voltage Track Lighting Worksheets
○	●	NRCC-LTI-06-E	Indoor Lighting Existing Conditions

STATE OF CALIFORNIA
INDOOR LIGHTING
CEC-NRCC-LTI-01-E (Revised 04/18) — CALIFORNIA ENERGY COMMISSION
CERTIFICATE OF COMPLIANCE — NRCC-LTI-01-E
Indoor Lighting — (Page 5 of 6)
Project Name: BURGER LOUNGE — Date Prepared: MAR. 29, 2018

A Separate Lighting Schedule Must Be Filled Out for Conditioned and Unconditioned Spaces. Installed Lighting Power listed on this Lighting Schedule is only for:
☒ **CONDITIONED SPACE** ☐ **UNCONDITIONED SPACE**

H. Indoor Lighting Schedule and Field Inspection Energy Checklist

Luminaire Schedule 01	02	03	04	05	06	Location 07	Field Inspector 08 Pass	Fail
Name or Item Tag	Complete Luminaire Description (i.e, 3 lamp fluorescent troffer, F32T8, one dimmable electronic ballast)	Watts per Luminaire	How wattage was determined: ☐ Watts per Table ☐ Equiv. to §130.0(c)	Number Luminaires	Total Installed Watts (= this area Watts x 05 Watts)	Primary Function area in which these luminaires are installed		
F2	2x4 RECESSED - LED 59.5W	59.5	☐ ☒	6	357	KITCHEN	○	○
F3	SURFACE MOUNT - LED 31W	31	☐ ☒	1	31	RESTROOM	○	○
F6	CYLINDER PENDANT - LED 24W	24	☐ ☒	14	336	DINING	○	○
F7.1	PENDANT - LED 12W	12	☐ ☒	5	60	DINING	○	○
F7.2	PENDANT - INCAN. 60W RATED	60	☐ ☒	14	840	DINING	○	○
			☐ ☐				○	○
			☐ ☐				○	○
			☐ ☐	0			○	○
			☐ ☐	0			○	○
				0			○	○
			INSTALLED WATTS PAGE TOTAL:		1,624	Enter sum total of all pages into NRCC-LTI-01-E; Page 2	1,935	

STATE OF CALIFORNIA
INDOOR LIGHTING – LIGHTING CONTROLS
CEC-NRCC-LTI-02-E (Revised 01/16) — CALIFORNIA ENERGY COMMISSION
CERTIFICATE OF COMPLIANCE — NRCC-LTI-02-E
Indoor Lighting - Lighting Controls — (Page 3 of 3)
Project Name: BURGER LOUNGE — Date Prepared: MAR. 29, 2018

A separate document must be filled out for Conditioned and Unconditioned Spaces. This page is used only for the following:
☒ CONDITIONED SPACES ☐ UNCONDITIONED SPACES

B. Mandatory and Prescriptive Indoor Lighting Control Schedule, PAF Calculation, and Field Inspection Checklist

Lighting Control Schedule 01	02	03	04	05	06	07	08	09	10	11	12	PAF Credit Calculation[2] 13	14	✓ If Accepted and Tested Required	Field Inspector 15 Pass	Fail
Location in Building	Type/ Description of Lighting Control (i.e.: occupancy sensor, automatic time switch, dimmer, automatic daylight, etc...)	# of Units	§130.1(a)	§130.1(b)	§130.1(c)	§130.1(d)	§130.1(e)	§130.1(f)	§130.1(g)	§130.1(h)	Standards Complying With [1] (✓ all that apply, or leave empty if Exempted): Mandatory Lights Regulation	Mandatory Vent. Lighting	PAF	Credit Allowed [2]				
KITCHEN	AUTO TIME SWITCH	1			X								0	☒	○	○
RESTROOM/JAN. CL.	OCCUPANCY SENSOR	2	X		X								0	☒	○	○
KITCHEN	DIMMER SWITCH	8	X										0	☒	○	○
DINING	DAYLIGHT PHOTOCELL	1				X							0	☒	○	○
													0	☐	○	○
													0	☐	○	○
													0	☐	○	○
Control Credit PAGE TOTAL (Sum of Column 13):													0			
IF MULTIPLE PAGES ARE USED, ENTER SUM TOTAL OF Control Credit for all pages HERE (Sum of all Column 13):																
													Enter Control Credit total into NRCC-LTI-01-E; Page 2			

1. §130.1(a) = Manual area controls; §130.0(b) = Multi Level; §130.1(c) = Auto Shut-Off; §130.1(d) = Mandatory Daylight; §130.1(e) = Demand Responsive; §140.6(d) = Additional lighting controls installed to earn a PAF; §140.6(d) = Prescriptive Secondary Sidelit Daylight Controls.
2. Check Table 140.6-A for correct Factor. PAFs shall not be traded between conditioned and unconditioned spaces. As a condition to earn a PAF, an Installation Certificate is also required to be filled out, signed, and submitted.

STATE OF CALIFORNIA
INDOOR LIGHTING POWER ALLOWANCE
CEC-NRCC-LTI-03-E (Revised 04/18) — CALIFORNIA ENERGY COMMISSION
CERTIFICATE OF COMPLIANCE — NRCC-LTI-03-E
Certificate of Compliance - Indoor Lighting Power Allowance — (Page 3 of 4)
Project Name: BURGER LOUNGE — Date Prepared: MAR. 29, 2018

A separate page must be filled out for Conditioned and Unconditioned Spaces. This page is only for:
☒ CONDITIONED spaces ☐ UNCONDITIONED spaces

C-3 AREA CATEGORY METHOD ADDITIONAL LIGHTING WATTAGE ALLOWANCE (from Table 140.6-C Footnotes)

01	02	03[3]	04	05	06	07
Primary Function	Sq Ft or Linear Ft [1]	Additional Watts Allowed	Wattage Allowance (02 x 03)	Description(s) and Quantity of Special Luminaire Types in each Primary Function Area	Total Design Watts [2]	ALLOWED WATTS Smaller of 04 or 06
DINING	722	0.5	361	PENDANT (F7.1) - 12W x 5	60	60
DINING	722	0.5	361	PENDANT (F7.2) - 60W x 14	840	361
			0			
			0			
			0			
			0			
			0			
			0			
			0			
			0			
			0			
			0			
			0			
			0			
			0			
			0			
			0			
			0			
TOTALS – Enter Into TOTAL AREA CATEGORY METHOD ADDITIONAL ALLOWANCES – Section C-1						421

1. Use linear feet only for additional allowance for white board or chalk board. All other additional Area Category allowances shall use watts per square foot.
2. Additional watts are available only when allowed according to the footnotes on bottom of Table 140.6-C, which include: Specialized task work; Ornamental lighting; Precision commercial and industrial work; Per linear foot of white board or chalk board; Accent, display and feature lighting; and Videoconferencing studio lighting.,
3. Luminaire classification and wattage shall be determined in accordance with §130.0(c) of the Standards.

STATE OF CALIFORNIA
INDOOR LIGHTING
CEC-NRCC-LTI-01-E (Revised 04/18) — CALIFORNIA ENERGY COMMISSION
CERTIFICATE OF COMPLIANCE — NRCC-LTI-01-E
Indoor Lighting — (Page 2 of 6)
Project Name: BURGER LOUNGE — Date Prepared: MAR. 29, 2018

C. Summary of Allowed Lighting Power

Conditioned and Unconditioned space Lighting must not be combined for compliance

	Indoor Lighting Power for Conditioned Spaces		Watts		Indoor Lighting Power for Unconditioned Spaces		Watts
01	**Installed** Lighting NRCC-LTI-01-E, Table H, page 5	+	1,935		**Installed** Lighting NRCC-LTI-01-E, Table H, page 5	+	
02	Portable Only for Offices NRCC-LTI-01-E, Table G, page 4	+	----				
03	Minus Lighting Control Credits NRCC-LTI-02-E, page 2	-	----		Minus Lighting Control Credits NRCC-LTI-02-E, page 2	-	
04	Adjusted **Installed** Lighting Power (row 1 plus row 2 minus row 3)	=	1,935		Adjusted **Installed** Lighting Power (row 1 minus row 3)	=	0
	Complies ONLY if **Installed** ≤ **Allowed** (Box 04 < Box 05)				Complies ONLY if **Installed** ≤ **Allowed** (Box 04 < Box 05)		
05	**Allowed** Lighting Power Conditioned NRCC-LTI-03-E, page 1 Alterations with replacement luminaires that have at least 50/35%lower power compared to the original existing luminaires, may instead use the allowed wattage from NRCC-LTI-06, page 2		1,964		**Allowed** Lighting Power Unconditioned NRCC-LTI-03-E, page 1 Alterations with replacement luminaires that have at least 50/35% lower power compared to the original existing luminaires, may instead use the allowed wattage from NRCC-LTI-06, page 2		

D. Declaration of Required Certificates of Installation

Declare by selecting yes for all of the Certificates that will be submitted. (Retain copies and verify forms are completed and signed.)

YES	NO	Form/Title	
●	○	NRCI-LTI-01-E - Must be submitted for all buildings	☐ Field Inspector
○	●	NRCI-LTI-02-E - Must be submitted for a lighting control system, or for an Energy Management Control System (EMCS), to be recognized for compliance.	☐ Field Inspector
○	●	NRCI-LTI-03-E - Must be submitted for a line-voltage track lighting integral current limiter, or for a supplementary overcurrent protection panel used to energize only line-voltage track lighting, to be recognized for compliance.	☐ Field Inspector
○	●	NRCI-LTI-04-E - Must be submitted for two interlocked systems serving an auditorium, a convention center, a conference room, a multipurpose room, or a theater to be recognized for compliance.	☐ Field Inspector
○	●	NRCI-LTI-05-E - Must be submitted for a Power Adjustment Factor (PAF) to be recognized for compliance.	☐ Field Inspector
○	●	NRCI-LTI-06-E - Must be submitted for additional wattage installed in a video conferencing studio to be recognized for compliance.	☐ Field Inspector

STATE OF CALIFORNIA
INDOOR LIGHTING
CEC-NRCC-LTI-01-E (Revised 04/18) — CALIFORNIA ENERGY COMMISSION
CERTIFICATE OF COMPLIANCE — NRCC-LTI-01-E
Indoor Lighting — (Page 4 of 6)
Project Name: BURGER LOUNGE — Date Prepared: MAR. 29, 2018

G. Installed Portable Luminaires in Offices – Exception to Section 140.6(a)

- This section shall be filled out ONLY for portable luminaires in offices (As defined in §100.1). All other planned portable luminaires shall be documented on next page of this compliance document.
- This section is used to determine if greater than 0.3 watts of portable lighting is planned for any office
- Fill out a separate line for each different office. Small offices that are typical (having the same general and portable lighting) may be grouped together. This allowance shall not be traded between offices having different lighting systems.

Office Portable Luminaire Schedule 01	02	Office Installed Portable Luminaire W/ft² 03	04	05	06	07	Office Location 08	09	Field Inspector 10 Pass	Fail
Complete Luminaire Description (i.e., LED, under cabinet, furniture mounted direct/indirect)	Watts per Luminaire	Equivalent Watts	Installed portable luminaire watts in this office (02 x 03)	Square feet of this office	Watts per square foot. (04 / 05)	If 06 ≤ 0.3, enter zero; If 06 > 0.3, (06-0.3)	(005 x 007)	Identify Office area in which these portable luminaires are installed		
			0				0		○	○
			0				0		○	○
			0				0		○	○
			0				0		○	○
			0				0		○	○
Total installed portable luminaire watts that are greater than 0.3 W/ft² per office:								Enter sum total of all pages into NRCC-LTI-01-E; Page 2		

STATE OF CALIFORNIA
INDOOR LIGHTING – LIGHTING CONTROLS
CEC-NRCC-LTI-02-E (Revised 01/16) — CALIFORNIA ENERGY COMMISSION
CERTIFICATE OF COMPLIANCE — NRCC-LTI-02-E
Indoor Lighting - Lighting Controls — (Page 1 of 3)
Project Name: BURGER LOUNGE — Date Prepared: MAR. 29, 2018

A. Mandatory Lighting Control Declaration Statements (Indicate if the measure applies by checking yes or no below.)

YES	NO	Control Requirements
○	●	Lighting shall be controlled by self-contained lighting control devices which are certified to the Energy Commission according to the Title 20 Appliance Efficiency Regulations in accordance with Section 110.9.
●	○	Lighting shall be controlled by a lighting control system or energy management control system in accordance with §110.9. An Installation Certificate shall be submitted in accordance with Section 130.4(b).
○	●	One or more Track Lighting Integral Current Limiters shall be installed which have been certified to the Energy Commission in accordance with §110.9 and §130.0. Additionally, an Installation Certificate shall be submitted in accordance with Section 130.4(b).
○	●	A Track Lighting Supplementary Overcurrent Protection Panel shall be installed in accordance with Section 110.9 and Section 130.0. Additionally, an Installation Certificate shall be installed in accordance with Section 130.4(b).
●	○	All lighting controls and equipment shall comply with the applicable requirements in §110.9 and shall be installed in accordance with the manufacturer's instructions in accordance with Section 130.1.
●	○	All luminaires shall be functionally controlled with manual ON and OFF lighting controls in accordance with Section 130.1(a).
●	○	General lighting shall be separately controlled from all other lighting systems in an area. Floor and wall display, window display, case display, ornamental, and special effects lighting shall each be separately controlled on circuits that are 20 amps or less. When track lighting is used, general, display, ornamental, and special effects lighting shall each be separately controlled; in accordance with Section 130.1(a)4.
●	○	The general lighting of any enclosed area 100 square feet or larger, with a connected lighting load that exceeds 0.5 watts per square foot shall meet the multi-level lighting control requirements in accordance with Section 130.1(b).
●	○	All installed indoor lighting shall be equipped with controls that meet the applicable Shut-OFF control requirements in Section 130.1(c).
●	○	Lighting in all Daylit Zones shall be controlled in accordance with the requirements in Section 130.1(d) and daylit zones are shown on the plans.
○	●	Lighting power in buildings larger than 10,000 square feet shall be capable of being automatically reduced in response to a Demand Responsive Signal in accordance with Section 130.1(e).
●	○	Before an occupancy permit is granted for a newly constructed building or area, or a new lighting system serving a building, area, or site is operated for normal use, indoor lighting controls serving the building, area, or site shall be certified as meeting the Acceptance Requirements for Code Compliance in accordance with Section 130.4 (a). The controls required to meet the Acceptance Requirements include automatic daylight controls, automatic shut-OFF controls, and demand responsive controls.

STATE OF CALIFORNIA
INDOOR LIGHTING – LIGHTING CONTROLS
CEC-NRCC-LTI-02-E (Revised 01/16) — CALIFORNIA ENERGY COMMISSION
CERTIFICATE OF COMPLIANCE — NRCC-LTI-02-E
Indoor Lighting - Lighting Controls — (Page 3 of 3)
Project Name: BURGER LOUNGE — Date Prepared: MAR. 29, 2018

DOCUMENTATION AUTHOR'S DECLARATION STATEMENT
1. I certify that this Certificate of Compliance documentation is accurate and complete.

Documentation Author Name:	KATHERINE BAKER	Documentation Author Signature:	
Company:	BAKER ARCHITECTURE	Signature Date:	MAR. 29, 2018
Address:	4080 CENTRE ST, SUITE 203	CEA Certification Identification (if applicable):	
City/State/Zip:	SAN DIEGO, CA 92103	Phone:	619-281-5937

RESPONSIBLE PERSON'S DECLARATION STATEMENT
I certify the following under penalty of perjury, under the laws of the State of California:
1. The information provided on this Certificate of Compliance is true and correct.
2. I am eligible under Division 3 of the Business and Professions Code to accept responsibility for the building design or system design identified on this Certificate of Compliance (responsible designer).
3. The energy features and performance specifications, materials, components, and manufactured devices for the building design or system design identified on this Certificate of Compliance conform to the requirements of Title 24, Part 1 and Part 6 of the California Code of Regulations.
4. The building design features or system design features identified on this Certificate of Compliance are consistent with the information provided on other applicable compliance documents, worksheets, calculations, plans and specifications submitted to the enforcement agency for approval with this building permit application.
5. I will ensure that a completed signed copy of this Certificate of Compliance shall be made available with the building permit(s) issued for the building, and made available to the enforcement agency for all applicable inspections. I understand that a completed signed copy of this Certificate of Compliance is required to be included with the documentation the builder provides to the building owner at occupancy.

Responsible Designer Name:	KATHERINE BAKER	Responsible Designer Signature:	
Company :	BAKER ARCHITECTURE	Date Signed:	MAR. 29, 2018
Address:	4080 CENTRE ST, SUITE 203	License:	C28547
City/State/Zip:	SAN DIEGO, CA 92103	Phone:	619-281-5937

STATE OF CALIFORNIA
INDOOR LIGHTING POWER ALLOWANCE
CEC-NRCC-LTI-03-E (Revised 04/18) — CALIFORNIA ENERGY COMMISSION
CERTIFICATE OF COMPLIANCE — NRCC-LTI-03-E
Certificate of Compliance - Indoor Lighting Power Allowance — (Page 4 of 4)
Project Name: BURGER LOUNGE — Date Prepared: MAR. 29, 2018

DOCUMENTATION AUTHOR'S DECLARATION STATEMENT
1. I certify that this Certificate of Compliance documentation is accurate and complete.

Documentation Author Name:	KATHERINE BAKER	Documentation Author Signature:	
Company:	BAKER ARCHITECTURE	Signature Date:	MAR. 29, 2018
Address:	4080 CENTRE ST, SUITE 203	CEA Certification Identification (if applicable):	
City/State/Zip:	SAN DIEGO, CA 92103	Phone:	619-281-5937

RESPONSIBLE PERSON'S DECLARATION STATEMENT
I certify the following under penalty of perjury, under the laws of the State of California:
1. The information provided on this Certificate of Compliance is true and correct.
2. I am eligible under Division 3 of the Business and Professions Code to accept responsibility for the building design or system design identified on this Certificate of Compliance (responsible designer).
3. The energy features and performance specifications, materials, components, and manufactured devices for the building design or system design identified on this Certificate of Compliance conform to the requirements of Title 24, Part 1 and Part 6 of the California Code of Regulations.
4. The building design features or system design features identified on this Certificate of Compliance are consistent with the information provided on other applicable compliance documents, worksheets, calculations, plans and specifications submitted to the enforcement agency for approval with this building permit application.
5. I will ensure that a completed signed copy of this Certificate of Compliance shall be made available with the building permit(s) issued for the building, and made available to the enforcement agency for all applicable inspections. I understand that a completed signed copy of this Certificate of Compliance is required to be included with the documentation the builder provides to the building owner at occupancy.

Responsible Designer Name:	KATHERINE BAKER	Responsible Designer Signature:	
Company :	BAKER ARCHITECTURE	Date Signed:	MAR. 29, 2018
Address:	4080 CENTRE ST, SUITE 203	License:	C28547
City/State/Zip:	SAN DIEGO, CA 92103	Phone:	619-281-5937

STATE OF CALIFORNIA
INDOOR LIGHTING
CEC-NRCC-LTI-01-E (Revised 04/18) — CALIFORNIA ENERGY COMMISSION
CERTIFICATE OF COMPLIANCE — NRCC-LTI-01-E
Indoor Lighting — (Page 3 of 6)
Project Name: BURGER LOUNGE — Date Prepared: MAR. 29, 2018

E. Declaration of Required Certificates of Acceptance

Declare by selecting yes for all of the Certificates of Acceptance that will be submitted. (Retain copies and verify forms are completed and signed.)

YES	NO	FORM/TITLE	
●	○	NRCA-LTI-02-A - Must be submitted for occupancy sensors and automatic time switch controls.	☐ Field Inspector
●	○	NRCA-LTI-03-A - Must be submitted for automatic daylight controls.	☐ Field Inspector
○	●	NRCA-LTI-04-A - Must be submitted for demand responsive lighting controls.	☐ Field Inspector
○	●	NRCA-LTI-05-A - Must be submitted for institutional tuning power adjustment factor (PAF).	

A Separate Lighting Schedule Must Be Filled Out for Conditioned and Unconditioned Spaces. Installed Lighting Power listed on this Lighting Schedule is only for: ☒ **CONDITIONED SPACE** ☐ **UNCONDITIONED SPACE**

F. Indoor Lighting Schedule and Field Inspection Energy Checklist

- ☐ The actual indoor lighting power listed on the next 2 pages includes all installed permanent and planned portable lighting systems.
- ☐ When Complete Building Method is used for compliance, list each different type of luminaire on separate lines.
- ☐ When Area Category Method or Tailored Method is used for compliance, list each different type of luminaire by each different function area on separate lines
- ☐ Also include track lighting in schedule, and submit the track lighting compliance document (NRCC-LTI-05-E) when line-voltage track lighting is installed.

STATE OF CALIFORNIA
INDOOR LIGHTING
CEC-NRCC-LTI-01-E (Revised 04/18) — CALIFORNIA ENERGY COMMISSION
CERTIFICATE OF COMPLIANCE — NRCC-LTI-01-E
Indoor Lighting — (Page 6 of 6)
Project Name: BURGER LOUNGE — Date Prepared: MAR. 29, 2018

DOCUMENTATION AUTHOR'S DECLARATION STATEMENT
1. I certify that this Certificate of Compliance documentation is accurate and complete.

Documentation Author Name:	KATHERINE BAKER	Documentation Author Signature:	
Company:	BAKER ARCHITECTURE	Signature Date:	MAR. 29, 2018
Address:	4080 CENTRE ST, SUITE 203	CEA Certification Identification (if applicable):	
City/State/Zip:	SAN DIEGO, CA 92103	Phone:	619-281-5937

RESPONSIBLE PERSON'S DECLARATION STATEMENT
I certify the following under penalty of perjury, under the laws of the State of California:
1. The information provided on this Certificate of Compliance is true and correct.
2. I am eligible under Division 3 of the Business and Professions Code to accept responsibility for the building design or system design identified on this Certificate of Compliance (responsible designer).
3. The energy features and performance specifications, materials, components, and manufactured devices for the building design or system design identified on this Certificate of Compliance conform to the requirements of Title 24, Part 1 and Part 6 of the California Code of Regulations.
4. The building design features or system design features identified on this Certificate of Compliance are consistent with the information provided on other applicable compliance documents, worksheets, calculations, plans and specifications submitted to the enforcement agency for approval with this building permit application.
5. I will ensure that a completed signed copy of this Certificate of Compliance shall be made available with the building permit(s) issued for the building, and made available to the enforcement agency for all applicable inspections. I understand that a completed signed copy of this Certificate of Compliance is required to be included with the documentation the builder provides to the building owner at occupancy.

Responsible Designer Name:	KATHERINE BAKER	Responsible Designer Signature:	
Company :	BAKER ARCHITECTURE	Date Signed:	MAR. 29, 2018
Address:	4080 CENTRE ST, SUITE 203	License:	C28547
City/State/Zip:	SAN DIEGO, CA 92103	Phone:	619-281-5937

STATE OF CALIFORNIA
INDOOR LIGHTING POWER ALLOWANCE
CEC-NRCC-LTI-03-E (Revised 04/18) — CALIFORNIA ENERGY COMMISSION
CERTIFICATE OF COMPLIANCE — NRCC-LTI-03-E
Certificate of Compliance - Indoor Lighting Power Allowance — (Page 1 of 4)
Project Name: BURGER LOUNGE — Date Prepared: MAR. 29, 2018

A separate page must be filled out for Conditioned and Unconditioned Spaces. This page is only for:
☒ CONDITIONED spaces ☐ UNCONDITIONED spaces

A. SUMMARY TOTALS OF LIGHTING POWER ALLOWANCES
If using Complete Building Method for compliance, use only the total in column (a) as total allowed building watts.
If using Area Category Method, Tailored Method, or a combination of Area Category and Tailored Method for compliance, use only the total in column (b) as the total allowed building watts

	(a)	(b)
01 Complete Building Method Allowed Watts. Documented in section B of NRCC-LTI-03-E (below on this page)	0	
02 Area Category Method Allowed Watts. Documented in section C-1 of NRCC-LTI-03-E (below on this page)		1,964
03 Tailored Method Allowed Watts. Documented in section A of NRCC-LTI-04-E		
TOTAL ALLOWED BUILDING WATTS. Enter number into correct cell on NRCC-LTI-01, Page 2, Row 1	0	1,964

☐ Check here if building contains both conditioned and unconditioned areas.

B. COMPLETE BUILDING METHOD LIGHTING POWER ALLOWANCE

01	02		03		04
TYPE OF BUILDING (From §140.6 Table 140.6-B)	WATTS PER ft²	X	COMPLETE BLDG. AREA	=	ALLOWED WATTS
					0
Total Area:					
Total Watts. Enter Total Watts into section A, row 1 (Above on this page)					0

C -1 AREA CATEGORY METHOD TOTAL LIGHTING POWER ALLOWANCES	Watts
Total from section C-2:	1,543
Total from section C-3:	421
Total Watts. Enter Total Watts into section A, row 2 (Above on this page).	1,964
For Alterations Only – Reduced lighting power option (Total Allowed Watts x 0.85). Enter this value into section A, row 2 if using this option.	

STATE OF CALIFORNIA
INDOOR LIGHTING POWER ALLOWANCE
CEC-NRCC-LTI-03-E (Revised 04/18) — CALIFORNIA ENERGY COMMISSION
CERTIFICATE OF COMPLIANCE — NRCC-LTI-03-E
Certificate of Compliance - Indoor Lighting Power Allowance — (Page 2 of 4)
Project Name: BURGER LOUNGE — Date Prepared: MAR. 29, 2018

A separate page must be filled out for Conditioned and Unconditioned Spaces. This page is only for:
☒ CONDITIONED spaces ☐ UNCONDITIONED spaces

C -2 AREA CATEGORY METHOD GENERAL LIGHTING POWER ALLOWANCE
- Do not include portable lighting for offices. Portable lighting for offices shall be documented only in Section G of NRCC-LTI-01-E.
- Separately list lighting for each primary function area as defined in §100.1 of the Standards.

01		02		03		04
AREA CATEGORY (From §140.6 Table 140.6-C)		WATTS				ALLOWED
Location in Building	Primary Function Area per Table 140.6-C	PER ft²	X	AREA (ft²)	=	WATTS
SUITE #135	DINING	1.0		722		722
SUITE #135	KITCHEN / SERVICE	1.2		616		739
SUITE #135	RESTROOM/JAN. CLOSET	0.6		136		82
						0
						0
						0
						0
						0
						0
						0
						0
						0
						0
						0
						0
						0
				TOTALS		1,474
Enter sum total Area Category allowed watts into section C-1 of NRCC-LTI-03-E (this compliance document)						1,543
						WATTS

4080 CENTRE ST, STE #203
SAN DIEGO, CA 92103 TEL
(619) 281-5937
www.bakerarchitecture.com

REV	DATE	BY	DESCRIPTION
1	05.29.18	-	BLDG. DEPT. PLAN CHECK

PROJECT # 17XXX

THESE DRAWINGS AND SPECIFICATIONS ARE CONFIDENTIAL AND SHALL REMAIN THE SOLE PROPERTY OF BAKER ARCHITECTURE, WHICH IS THE OWNER OF COPYRIGHT IN THIS WORK. THEY SHALL NOT BE REPRODUCED IN WHOLE OR IN PART, SHARED WITH THIRD PARTIES OR USED IN ANY MANNER ON OTHER PROJECTS OR EXTENSIONS TO THIS PROJECT WITHOUT THE PRIOR WRITTEN CONSENT OF BAKER ARCHITECTURE.

BURGER LOUNGE III LLC
FOUNTAINS AT ROSEVILLE
1198 ROSEVILLE PKWY. #135 - ROSEVILLE, CA 95678

CITY STAMP

DATE: 04/06/18

E4.0

STATE OF CALIFORNIA
OUTDOOR LIGHTING CONTROLS
CEC-NRCC-LTO-02-E (Revised 06/16) — CALIFORNIA ENERGY COMMISSION

CERTIFICATE OF COMPLIANCE	NRCC-LTO-02-E
Outdoor Lighting Controls	(Page 1 of 3)
Project Name: BURGER LOUNGE	Date Prepared: MAR. 29, 2018

A. Mandatory Outdoor Lighting Control Declaration Statements

Check all that apply:

- ☐ Lighting shall be controlled by self-contained lighting control devices which are certified to the Energy Commission according to the Title 20 Appliance Efficiency Regulations in accordance with §110.9(a).
- ☒ Lighting shall be controlled by a lighting control system or energy management control system in accordance with §110.9. An Installation Certificate shall be submitted in accordance with §130.4(b).
- ☒ All lighting controls and equipment shall comply with the applicable requirements in §110.9 and shall be installed in accordance with the manufacturer's instructions in accordance with §130.0(d).
- ☐ Part-Night Outdoor Lighting Controls, as defined in Section 100.1(b), shall meet the requirements in Section 110.9(b)5.
- ☐ All outdoor incandescent luminaires rated over 100 watts, determined in accordance with Section 130.0(c), shall be controlled by a motion sensor.
- ☐ All outdoor luminaires rated for use with lamps greater than 150 lamp watts, determined in accordance with Section 130.0(c), shall comply with Uplight and Glare requirements in accordance with Section 130.2(b)
- ☒ All installed outdoor lighting shall be controlled by a photocontrol or outdoor astronomical time-switch control, or other control capable of automatically switching OFF in accordance with Section 130.2(c)1.
- ☒ All installed outdoor lighting shall be circuited and independently controlled from other electrical loads by an automatic scheduling control in accordance with Section 130.2(c)2.
- ☐ All installed outdoor lighting, where the bottom of the luminaire is mounted 24 feet or less above the ground, shall be controlled with automatic lighting controls in accordance with Section 130.2(c)3.
- ☐ For Outdoor Sales Frontage, an automatic lighting control shall be installed in accordance with Section 130.2(c)4.
- ☐ For Building Facade, Ornamental Hardscape and Outdoor Dining lighting, an automatic lighting control shall be installed in accordance with Section 130.2(c)5
- ☒ Before an occupancy permit is granted for the newly constructed building or for the addition, or for any altered outdoor lighting controls, shall be certified as meeting the Acceptance Requirements for Code Compliance in accordance with §130.4 (a). Outdoor lighting controls shall comply with the applicable requirements of Section 130.2(c) and Reference Nonresidential Appendix NA7.8.

STATE OF CALIFORNIA
OUTDOOR LIGHTING CONTROLS
CEC-NRCC-LTO-02-E (Revised 06/16) — CALIFORNIA ENERGY COMMISSION

CERTIFICATE OF COMPLIANCE	NRCC-LTO-02-E
Outdoor Lighting Controls	(Page 2 of 3)
Project Name: BURGER LOUNGE	Date Prepared: MAR. 29, 2018

B. Mandatory Outdoor Lighting Control Schedule and Field Inspection Checklist

Outdoor Lighting Control Schedule			Standards Complying With (✓ all that apply, or leave empty if Exempted)						✓ if Acceptance Test Required	Field Inspector	
01	02	03	04	05	06	07	08	09	10	11	
Location and Application of Luminaires Being Controlled	Type/ Description of Lighting Control (i.e. outdoor motion sensor, outdoor photocontrol, outdoor astronomical time-switch control, automatic scheduling control, part-night outdoor lighting control)	# of Units	§130.2(c)1	§130.2(c)1	§130.2(c)2	§130.2(c)3	§130.2(c)4	§130.2(c)5		Pass	Fail
DINING PATIO	ASTRONOMICAL TIMESWITCH	1		X	X				☒	○	○
									☐	○	○
									☐	○	○
									☐	○	○
									☐	○	○
									☐	○	○
									☐	○	○
									☐	○	○
									☐	○	○
									☐	○	○
									☐	○	○
									☐	○	○
									☐	○	○
									☐	○	○
									☐	○	○
									☐	○	○

STATE OF CALIFORNIA
OUTDOOR LIGHTING CONTROLS
CEC-NRCC-LTO-02-E (Revised 06/16) — CALIFORNIA ENERGY COMMISSION

CERTIFICATE OF COMPLIANCE	NRCC-LTO-02-E
Outdoor Lighting Controls	(Page 3 of 3)
Project Name: BURGER LOUNGE	Date Prepared: MAR. 29, 2018

DOCUMENTATION AUTHOR'S DECLARATION STATEMENT

1. I certify that this Certificate of Compliance documentation is accurate and complete.

Documentation Author Name:	KATHERINE BAKER	Documentation Author Signature:	
Company:	BAKER ARCHITECTURE	Signature Date:	MAR. 29, 2018
Address:	3411 33rd STREET	CEA Certification Identification (if applicable):	
City/State/Zip:	SAN DIEGO, CA 92104	Phone:	619-281-5937

RESPONSIBLE PERSON'S DECLARATION STATEMENT

I certify the following under penalty of perjury, under the laws of the State of California:
1. The information provided on this Certificate of Compliance is true and correct.
2. I am eligible under Division 3 of the Business and Professions Code to accept responsibility for the building design or system design identified on this Certificate of Compliance (responsible designer).
3. The energy features and performance specifications, materials, components, and manufactured devices for the building design or system design identified on this Certificate of Compliance conform to the requirements of Title 24, Part 1 and Part 6 of the California Code of Regulations.
4. The building design features or system design features identified on this Certificate of Compliance are consistent with the information provided on other applicable compliance documents, worksheets, calculations, plans and specifications submitted to the enforcement agency for approval with this building permit application.
5. I will ensure that a completed signed copy of this Certificate of Compliance shall be made available with the building permit(s) issued for the building, and made available to the enforcement agency for all applicable inspections. I understand that a completed signed copy of this Certificate of Compliance is required to be included with the documentation the builder provides to the building owner at occupancy.

Responsible Designer Name:	KATHERINE BAKER	Responsible Designer Signature:	
Company :	BAKER ARCHITECTURE	Date Signed:	MAR. 29, 2018
Address:	3411 33rd STREET	License:	C28547
City/State/Zip:	SAN DIEGO, CA 92104	Phone:	619-281-5937

STATE OF CALIFORNIA
OUTDOOR LIGHTING
CEC-NRCC-LTO-01-E (Revised 04/16) — CALIFORNIA ENERGY COMMISSION

CERTIFICATE OF COMPLIANCE	NRCC-LTO-01-E
Outdoor Lighting	(Page 1 of 4)
Project Name: BURGER LOUNGE	Date Prepared: MAR. 29, 2018

A. General Information

Project Address: 1198 ROSEVILLE PKWY. #135, ROSEVILLE, CA	Total Illuminated Hardscape Area: 347 S.F.
Phase of Construction: ☒ New Construction ☐ Addition ☐ Alteration	
Outdoor Lighting Zone (LZ) ☐ LZ-1 ☐ LZ-2 ☒ LZ-3 ☐ LZ-4	

I have confirmed with the AHJ which LZ applies to this site. For default lighting zone designations, see Title 24 Part 6, §10-114

B. Lighting Compliance Documents (check box for each document included)

For detailed instructions on the use of this and all Energy Efficiency Standards compliance documents, refer to the Nonresidential Manual published by the California Energy Commission.

☒	NRCC-LTO-01-E	Certificate of Compliance
☒	NRCC-LTO-02-E	Outdoor Lighting Controls Certificate of Compliance
☒	NRCC-LTO-03-E	Outdoor Lighting Power Allowance Certificate of Compliance
☐	NRCC-LTO-04-E	Outdoor Lighting Existing Conditions Certificate of Compliance

C. Summary of Allowed Outdoor Lighting Power		Watts
01	**Sum Total ALLOWED** Outdoor Lighting Wattage from NRCC-LTO-03-E, page 1 Alterations with NO increase of connected lighting load may instead use the allowed wattage from NRCC-LTO-04, page 2.	561
	Complies ONLY if **Installed** (Box 02) ≤ **Allowed** (Box 01)	
02	**Sum Total INSTALLED** Outdoor Lighting Wattage from NRCC-LTO-01-E, page 3.	192

D. Declaration of Required Installation Certificates

Declare by checking all Installation Certificates that will be submitted. (Retain copies and verify compliance documents are completed and signed.)

☒ NRCI-LTO-01-E - Must be submitted for all buildings	☐ Field Inspector
☒ NRCI-LTO-02-E - Must be submitted for a lighting control system, or for an Energy Management Control System (EMCS), to be recognized for compliance.	☐ Field Inspector

E. Declaration of Required Certificates of Acceptance

Declare by checking all of the Certificates of Acceptance that will be submitted. (Retain copies and verify compliance documents are completed and signed.)

☒ NRCA-LTO-02-A - Must be submitted for outdoor lighting controls. ☐ Field Inspector

F. Schedule of Luminaires Exempt from the Outdoor Lighting Power Requirements in §140.7

01	02
Name or Symbol	Description of exempt luminaire in accordance with the exemptions

STATE OF CALIFORNIA
OUTDOOR LIGHTING
CEC-NRCC-LTO-01-E (Revised 04/16) — CALIFORNIA ENERGY COMMISSION

CERTIFICATE OF COMPLIANCE	NRCC-LTO-01-E
Outdoor Lighting	(Page 2 of 4)
Project Name: BURGER LOUNGE	Date Prepared: MAR. 29, 2018

G. Schedule of Luminaires Exempt from the Cutoff Requirements in §130.2(b)

01	02
Name or Symbol	Description of exempt luminaire in accordance with the exemptions
F17	16W LED PENDANT (<150W)

H. Schedule of Luminaires Exempt from the Outdoor Lighting Control Requirements in §130.2(c)

01	02
Name or Symbol	Description of exempt luminaire in accordance with the exemptions

STATE OF CALIFORNIA
OUTDOOR LIGHTING
CEC-NRCC-LTO-01-E (Revised 04/16) — CALIFORNIA ENERGY COMMISSION

CERTIFICATE OF COMPLIANCE	NRCC-LTO-01-E
Outdoor Lighting	(Page 3 of 4)
Project Name: BURGER LOUNGE	Date Prepared: MAR. 29, 2018

I. Outdoor Lighting Schedule and Field Inspection Energy Checklist

Luminaire Schedule		Installed Watts				Location	Cutoff	Field Inspector	
01	02	03	04		05	06	07	08	09
Name or Item Tag	Complete Luminaire Description	Watts per Luminaire	How wattage was determined: CEC Default from §A3	How wattage was determined: According to §130.0(c)	Number of Luminaires	Total Installed Watts (03 x 05)	Primary Function area in which these luminaires are installed (Outdoor Lighting Zone)	BUG Rating	Pass / Fail
F17	16W LED PENANT	16	☐	☒	12	192	EXTERIOR DINING	UH: UL: FVH: BVH: FH: BH:	○ ○
			☐	☐		0		UH: UL: FVH: BVH: FH: BH:	○ ○
			☐	☐		0		UH: UL: FVH: BVH: FH: BH:	○ ○
					INSTALLED WATTS PAGE TOTAL:	192	Enter sum total of all pages (**Sum Total INSTALLED** Outdoor lighting wattage) into NRCC-LTO-01-E; Page 1		192

STATE OF CALIFORNIA
OUTDOOR LIGHTING
CEC-NRCC-LTO-01-E (Revised 04/16) — CALIFORNIA ENERGY COMMISSION

CERTIFICATE OF COMPLIANCE	NRCC-LTO-01-E
Outdoor Lighting	(Page 4 of 4)
Project Name: BURGER LOUNGE	Date Prepared: MAR. 29, 2018

DOCUMENTATION AUTHOR'S DECLARATION STATEMENT

1. I certify that this Certificate of Compliance documentation is accurate and complete.

Documentation Author Name:	KATHERINE BAKER	Documentation Author Signature:	
Company:	BAKER ARCHITECTURE	Signature Date:	MAR. 29, 2018
Address:	3411 33rd STREET	CEA Certification Identification (if applicable):	
City/State/Zip:	SAN DIEGO, CA 92104	Phone:	619-281-5937

RESPONSIBLE PERSON'S DECLARATION STATEMENT

I certify the following under penalty of perjury, under the laws of the State of California:
1. The information provided on this Certificate of Compliance is true and correct.
2. I am eligible under Division 3 of the Business and Professions Code to accept responsibility for the building design or system design identified on this Certificate of Compliance (responsible designer).
3. The energy features and performance specifications, materials, components, and manufactured devices for the building design or system design identified on this Certificate of Compliance conform to the requirements of Title 24, Part 1 and Part 6 of the California Code of Regulations.
4. The building design features or system design features identified on this Certificate of Compliance are consistent with the information provided on other applicable compliance documents, worksheets, calculations, plans and specifications submitted to the enforcement agency for approval with this building permit application.
5. I will ensure that a completed signed copy of this Certificate of Compliance shall be made available with the building permit(s) issued for the building, and made available to the enforcement agency for all applicable inspections. I understand that a completed signed copy of this Certificate of Compliance is required to be included with the documentation the builder provides to the building owner at occupancy.

Responsible Designer Name:	KATHERINE BAKER	Responsible Designer Signature:	
Company :	BAKER ARCHITECTURE	Date Signed:	MAR. 29, 2018
Address:	3411 33rd STREET	License:	C28547
City/State/Zip:	SAN DIEGO, CA 92104	Phone:	619-281-5937

STATE OF CALIFORNIA
OUTDOOR LIGHTING POWER ALLOWANCES
CEC-NRCC-LTO-03-E (Revised 01/16) — CALIFORNIA ENERGY COMMISSION

CERTIFICATE OF COMPLIANCE	NRCC-LTO-03-E
Outdoor Lighting Power Allowances	(Page 1 of 4)
Project Name: BURGER LOUNGE	Date Prepared: MAR. 29, 2018

A. OUTDOOR LIGHTING POWER ALLOWANCE SUMMARY

1. General Hardscape Lighting Power Allowance (Site Total from Section B of NRCC-LTO-03-E) — 1. 561
2. Additional Specific "use it or lose it" Lighting Power Allowances listed in each of these cells shall be identical to total allowed watts determined in Section C-1 to C-4 of NRCC-LTO-03-E.

PER APPLICATION from Section C-1		PER UNIT LENGTH (SALES FRONTAGE) from Section C-2		PER HARDSCAPE AREA (ORNAMENTAL LIGHTING) from Section C-3		PER SPECIFIC AREA from Section C-4.		
0	+	0	+	0	+	0	=	2. 0

3. **Sum Total ALLOWED** Outdoor Lighting Wattage (add rows 1 and 2) — 3. 561

B. GENERAL HARDSCAPE LIGHTING POWER ALLOWANCE FROM TABLE 140.7-A

Area Wattage Allowance (AWA)				Linear Wattage Allowance (LWA)			Initial Wattage Allowance (IWA)	Total General Hardscape Lighting Allowance
01	02	03	04	05	06	07	08	09
Name of Area	Illuminated Hardscape Area	AWA Per Square Foot	AWA (B02 x B03)	Perimeter Length of General Hardscape	LPA per Linear Foot	LWA (B05 x B06)	IWA (Watts)	B04 + B07 + B08
DINING PATIO	347	0.04	14	76'	0.35	27	520	561
			0			0		0
			0			0		0
			0			0		0
			0			0		0
			0			0		0
			0			0		0
			0			0		0
			0			0		0
			0			0		0
			0			0		0
			0			0		0
			0			0		0
			0			0		0
							TOTAL	561

STATE OF CALIFORNIA
OUTDOOR LIGHTING POWER ALLOWANCES
CEC-NRCC-LTO-03-E (Revised 01/16) — CALIFORNIA ENERGY COMMISSION

CERTIFICATE OF COMPLIANCE	NRCC-LTO-03-E
Outdoor Lighting Power Allowances	(Page 3 of 4)
Project Name: BURGER LOUNGE	Date Prepared: MAR. 29, 2018

C-3. WATTAGE ALLOWANCE PER SQUARE FOOT OF HARDSCAPE AREA (Ornamental Lighting) – Table 140.7-B

- Allowance for the total site illuminated hardscape area. Luminaires qualifying for this allowance shall be rated for 100 watts or less as determined in accordance with Section 130.0(c), and shall be post-top luminaires, lanterns, pendant luminaires, or chandeliers.
- If more than one luminaire type is used per location, use multiple rows for that location

01	02	03	04	05	06	07	08	09	10
	ALLOTTED WATTS				DESIGN WATTS				
Name of area for which ornamental allowance is claimed	Square Feet of Hardscape	Wattage Allowance per Square Foot	Allotted Watts (02 x 03)	Luminaire Code or Symbol	Luminaire Description	Luminaire Quantity	Watts per Luminaire	Design Watts (07 x 08)	Allowed Watts (smaller of 04 or 09)
			0					0	
			0					0	
			0					0	
			0					0	
							Sum total allowance for ornamental lighting on the site:		0

C-4. WATTAGE ALLOWANCE PER SQUARE FOOT OF SPECIFIC AREA - Table 140.7-B

- Allowances for Building Facades; Outdoor Sales Lots; Vehicle Service Station Hardscape; Vehicle Service Station Canopies; Sales Canopies; Non-sales Canopies; Tunnels; Guard Stations; Student Pick-up/Drop-off zone: Outdoor Dining; Special Security Lighting for Retail Parking and Pedestrian Hardscape.
- If more than one luminaire type is used per location, use multiple rows for that location

01	02	03	04	05	06	07	08	09	10
	ALLOTTED WATTS				DESIGN WATTS				
Name of Location for Which Allowance is Claimed	Illuminated Area of Application	Wattage Allowance per Square Foot	Allotted Watts (02 x 03)	Luminaire Code or Symbol	Luminaire Description	Luminaire Quantity	Watts per Luminaire	Design Watts (07 x 08)	Allowed Watts (smaller of 04 or 09)
			0					0	
			0					0	
			0					0	
			0					0	
							Sum total allowance for specific area on the site:		0

STATE OF CALIFORNIA
OUTDOOR LIGHTING POWER ALLOWANCES
CEC-NRCC-LTO-03-E (Revised 01/16) — CALIFORNIA ENERGY COMMISSION

CERTIFICATE OF COMPLIANCE	NRCC-LTO-03-E
Outdoor Lighting Power Allowances	(Page 2 of 4)
Project Name: BURGER LOUNGE	Date Prepared: MAR. 29, 2018

C. ADDITIONAL "USE IT OR LOSE IT" OUTDOOR LIGHTING POWER ALLOWANCES FOR SPECIFIC APPLICATIONS

☐ The additional specific outdoor lighting power allowance shall be the smaller of the allowed lighting power or the actual lighting power used.
☐ Use Outdoor Lighting Zone (OLZ) that is documented on page 1 of NRCC-LTO-01-E to calculate the specific wattage allowances.

C-1. WATTAGE ALLOWANCE PER APPLICATION – Table 140.7-B

☐ Available only for qualifying locations, which include Building Entrances or Exits; Primary Entrances to Senior Care Facilities, Police Stations, Hospitals, Fire Stations, and Emergency Vehicle Facilities; Drive Up Windows; Vehicle Service Station Uncovered Fuel Dispenser, ATM Machine Lighting
☐ If more than one luminaire type is used per location, use multiple rows for that location

01	02	03	04	05	06	07	08	09	10
	ALLOTTED WATTS				DESIGN WATTS				
Name of Location for Which Allowance is Claimed	Number of Qualifying Locations	Wattage Allowance per Qualifying Location	Allotted Watts (02 x 03)	Luminaire Code or Symbol	Luminaire Description	Luminaire Quantity	Watts per Luminaire	Design Watts (07 x 08)	Allowed Watts (smaller of 04 or 09)
			0					0	
			0					0	
			0					0	
			0					0	
							Sum total allowance per application on this site:		0

C-2. WATTAGE ALLOWANCE PER UNIT LENGTH (Sales Frontage) from Table 140.7-B

☐ If more than one luminaire type is used per location, use multiple rows for that location

01	02	03	04	05	06	07	08	09	10
	ALLOTTED WATTS				DESIGN WATTS				
Name of Location for Which Allowance is Claimed	Linear Feet of Sales Frontage	Wattage Allowance per Linear Foot	Allotted Watts (02 x 03)	Luminaire Code or Symbol	Luminaire Description	Luminaire Quantity	Watts per Luminaire	Design Watts (07 x 08)	Allowed Watts (smaller of 04 or 09)
			0					0	
			0					0	
			0					0	
							Sum total allowance for sales frontage on the site:		0

STATE OF CALIFORNIA
OUTDOOR LIGHTING POWER ALLOWANCES
CEC-NRCC-LTO-03-E (Revised 01/16) — CALIFORNIA ENERGY COMMISSION

CERTIFICATE OF COMPLIANCE	NRCC-LTO-03-E
Outdoor Lighting Power Allowances	(Page 4 of 4)
Project Name: BURGER LOUNGE	Date Prepared: MAR. 29, 2018

DOCUMENTATION AUTHOR'S DECLARATION STATEMENT

1. I certify that this Certificate of Compliance documentation is accurate and complete.

Documentation Author Name:	KATHERINE BAKER	Documentation Author Signature:	
Company:	BAKER ARCHITECTURE	Signature Date:	MAR. 29, 2018
Address:	3411 33rd STREET	CEA Certification Identification (if applicable):	
City/State/Zip:	SAN DIEGO, CA 92104	Phone:	619-281-5937

RESPONSIBLE PERSON'S DECLARATION STATEMENT

I certify the following under penalty of perjury, under the laws of the State of California:
1. The information provided on this Certificate of Compliance is true and correct.
2. I am eligible under Division 3 of the Business and Professions Code to accept responsibility for the building design or system design identified on this Certificate of Compliance (responsible designer).
3. The energy features and performance specifications, materials, components, and manufactured devices for the building design or system design identified on this Certificate of Compliance conform to the requirements of Title 24, Part 1 and Part 6 of the California Code of Regulations.
4. The building design features or system design features identified on this Certificate of Compliance are consistent with the information provided on other applicable compliance documents, worksheets, calculations, plans and specifications submitted to the enforcement agency for approval with this building permit application.
5. I will ensure that a completed signed copy of this Certificate of Compliance shall be made available with the building permit(s) issued for the building, and made available to the enforcement agency for all applicable inspections. I understand that a completed signed copy of this Certificate of Compliance is required to be included with the documentation the builder provides to the building owner at occupancy.

Responsible Designer Name:	KATHERINE BAKER	Responsible Designer Signature:	
Company :	BAKER ARCHITECTURE	Date Signed:	MAR. 29, 2018
Address:	3411 33rd STREET	License:	C28547
City/State/Zip:	SAN DIEGO, CA 92104	Phone:	619-281-5937

LICENSED ARCHITECT — KATHERINE BAKER — No. C28547 — REN. 6-19 — STATE OF CALIFORNIA

BAKER [b a] architecture
4080 CENTRE ST, STE #203
SAN DIEGO, CA 92103 TEL
(619) 281-5937
www.bakerarchitecture.com

THESE DRAWINGS AND SPECIFICATIONS ARE CONFIDENTIAL AND SHALL REMAIN THE SOLE PROPERTY OF BAKER ARCHITECTURE, WHICH IS THE OWNER OF COPYRIGHT IN THIS WORK. THEY SHALL NOT BE REPRODUCED IN WHOLE OR IN PART, SHARED WITH THIRD PARTIES OR USED IN ANY MANNER ON OTHER PROJECTS OR EXTENSIONS TO THIS PROJECT WITHOUT THE PRIOR WRITTEN CONSENT OF BAKER ARCHITECTURE

REV	DATE	BY	DESCRIPTION
1	05.29.18	-	BLDG. DEPT. PLAN CHECK

REVISION SCHEDULE

PROJECT # 17XXX

BURGER LOUNGE III LLC
FOUNTAINS AT ROSEVILLE
1198 ROSEVILLE PKWY. #135 - ROSEVILLE, CA 95678

CITY STAMP

DATE: 04/06/18

E4.1

HEALTH DEPARTMENT NOTES

THE FOLLOWING ARE THE MINIMUM STANDARDS FOR COMPLIANCE WITH HEALTH DEPARTMENT REQUIREMENTS. THE G.C. AND KEC CONTRACTOR SHALL COMPLY WITH THESE MINIMUM STANDARDS, DRAWINGS AND SPECIFICATIONS.

1. A CONCRETE SLAB IS PROVIDED FOR TRASH, GARBAGE, AND GREASE CONTAINER. IF WALLS ENCLOSE THIS AREA, THE INTERIOR WALL SURFACE WILL BE SMOOTH, SEALED AND WASHABLE (e.i.,PLASTERED SMOOTH AND PAINTED, ETC.)
2. ALL FOOD-RELATED AND UTENSIL-RELATED EQUIPMENT SHALL MEET OR BE EQUIVALENT TO SANITATION STANDARDS ESTABLISHED BY AN AMERICAN NATIONAL STANDARDS INSTITUTE (ANSI) ACCREDITED PROGRAM.
3. ALL FLOOR MOUNTED EQUIPMENT WILL BE INSTALLED ON MINIMUM 6" SANITARY LEGS, CASTERS OR COMPLETELY SEALED IN POSITION ON A 4" HIGH CURB WITH CONTINUOUSLY COVED BASE. COUNTERTOP EQUIPMENT WILL BE ON 4" SANITARY LEGS OR SEALED TO THE COUNTER UNLESS READILY MOVABLE.
4. FOR ALL SELF-SERVICE SODA, ICE AND OTHER DISPENSERS WHERE REFILLS ARE PROVIDED THEY MUST BE PUSH BUTTON TYPES, OR LEVER TYPES WHERE THE LEVER CONTACTS THE CONTAINER AT LEAST ONE INCH BELOW THE RIM.
5. ANY OPERABLE WINDOWS, VENT OPENING, OR OTHER SIMILAR OPENINGS MUST BE PROVIDED WITH TIGHT FITTING SCREENS OF MINIMUM 16 MESH TO THE INCH. WINDOWS SHALL BE FIXED AT FOOD PREP, UTENSIL-WASHING, OPEN FOOD AND UTENSIL STORAGE AREAS.
6. ALL EXTERIOR DOORS SHALL OPEN OUTWARD, BE SELF-CLOSING AND TIGHT FITTING.
7. BI-FOLD, FRENCH, ACCORDION STYLE AND ROLL-UP DOORS CANNOT OPEN INTO THE FOOD PREP, UTENSIL WASHING OR UNPACKAGED FOOD SERVICE AREAS.
8. TOILET ROOM AND DRESSING ROOM DOORS MUST BE SELF-CLOSING AND TIGHT FITTING.
9. DELIVERY DOORS SHALL HAVE AIR CURTAIN FANS THAT SPAN THE WIDTH OVER THE DOOR. THE FAN MUST ACTIVATE VIA A MICROSWITCH PROVIDING A MINIMUM VELOCITY OF 1600 FPM MEASURED 3 FEET ABOVE THE GROUND.
10. A MINIMUM OF 10 FOOT-CANDLES OF LIGHT MEASURED 30" OFF FLOOR SHALL BE PROVIDED IN WALK-IN REFRIGERATED STORAGE AND DRY STORAGE AREAS.
11. A MINIMUM OF 20-FOOT CANDLES OF LIGHT SHALL BE PROVIDED WHERE FOOD, FRESH PRODUCE OR PRE-PACKAGED ITEMS ARE PROVIDED FOR CONSUMER SELF-SERVICE AND SOLD OR OFFERED FOR CONSUMPTION INSIDE EQUIPMENT, IN AREAS USED FOR HAND WASHING, WAREWASHING, UTENSIL STORAGE, AND TOILET ROOMS.
12. A MINIMUM OF 50 FOOT-CANDLES OF LIGHT MEASURED 30" OFF FLOOR SHALL BE PROVIDED WHEN WORKING WITH FOOD, UTENSILS, EQUIPMENT SUCH AS KNIVES, SLICERS, GRINDERS, AREAS WHERE EMPLOYEE SAFETY IS A FACTOR AND IN ALL AREAS DURING PERIODS OF CLEANING.
13. SHATTER SHIELDS SHALL BE PROVIDED FOR ALL LIGHTS ABOVE FOOD PREPARATION, WORK, AND STORAGE AREAS.
14. ALL WAREWASHING SINKS TO HAVE 3 COMPARTMENTS THAT ARE A MINIMUM SIZE OF AT LEAST 18"X18"X12" DEEP (OR 16"X20"X12" DEEP) WITH A MINIMUM 18" DRAINBOARD AT EACH END. IF AGAINST A WALL, IT MUST HAVE AN 8" INTEGRAL BACKSPLASH. HOWEVER, IT MUST BE CAPABLE OF ACCOMMODATING THE LARGEST UTENSIL TO BE WASHED. A WAREWASHING MACHINE DOES NOT SUBSTITUTE FOR SINK REQUIREMENT. 3 OR 4 COMPARTMENT BAR SINKS TO BE AT LEAST 12"X12"X10" DEEP (OR 10"X14"X10" DEEP) WITH A MINIMUM 18" DRAINBOARD AT EACH END.
15. ALL SINKS SHALL HAVE SPOUT(S) CAPABLE OF REACHING EACH COMPARTMENT.
16. FOOD PREP SINK COMPARTMENT(S) TO BE AT LEAST 18"X18"X12" DEEP (OR 16"X20"X12" DEEP) WITH A MINIMUM 18" DRAINBOARD. SEPARATE FOOD PREP SINKS SHALL BE PROVIDED FOR MEATS AND PRODUCE.
17. A SEPARATE WET WASTE DUMP FIXTURE SHALL BE PROVIDED FOR DISPOSAL OF DRINK OR ICE WASTE.
18. EACH HAND WASHING SINK MUST HAVE PERMANENTLY MOUNTED SINGLE-SERVICE SOAP AND PAPER TOWEL DISPENSERS.
19. THE HOT WATER HEATER WILL BE A COMMERCIAL TYPE CAPABLE OF CONSTANTLY SUPPLYING HOT WATER AT A TEMPERATURE OF 120° F TO ALL SINKS. IN SIZING THE WATER HEATER, THE PEAK HOURLY DEMAND FOR ALL SINKS, ETC., ARE ADDED TOGETHER TO DETERMINE THE MINIMUM REQUIRED RECOVERY RATE.
20. ALL LAVATORIES OR HAND SINKS WILL HAVE A COMBINATION FAUCET OR PREMIXING FAUCET CAPABLE OF SUPPLYING WATER TEMPERED TO 100°-108°F. SELF-CLOSING OR METERED FAUCET TO PROVIDE AT LEAST 15 SECONDS OF WATER WITHOUT REACTIVATION.
21. ALL PLUMBING, ELECTRICAL AND GAS LINES SHALL BE CONCEALED WITHIN THE BUILDING STRUCTURE TO GREAT AN EXTENT AS POSSIBLE. ALL EXPOSED CONDUITS, PLUMBING, ETC. SHALL BE INSTALLED AT LEAST 6" OFF FLOOR AND 3/4" FROM WALLS USING STANDOFF BRACKETS.
22. CONDUITS, PLUMBING OR PIPING CANNOT BE INSTALLED ACROSS ANY AISLE WAY, TRAFFIC AREA OR DOOR OPENING.
23. MULTIPLE RUNS OR CLUSTERS OF CONDUIT OR PIPELINES SHALL BE FURRED IN OR ENCASED IN AN APPROVED SEALED ENCLOSURE.
24. ALL LIQUID WASTE SHALL BE DRAINED BE MEANS OF INDIRECT WASTE PIPES INTO A FLOOR SINK. FLOOR SINKS ARE TO BE INSTALLED FLUSH WITH THE FINISHED FLOOR SURFACE AND HAVE SUITABLE EASILY REMOVABLE SAFETY COVER GRATES.
25. FLOOR SINK TO BE 50% EXPOSED WHEN NO ACCESS IS PROVIDED FOR CLEANING OR BE IN LINE WITH THE FRONT FACE OF ELEVATED FREESTANDING EQUIPMENT.
26. APPROVED BACKFLOW PREVENTION DEVICES SHALL BE PROPERLY INSTALLED UPSTREAM OF ANY POTENTIAL HAZARD BETWEEN THE POTABLE WATER SUPPLY AND A SOURCE OF CONTAMINATION. HOSES SHALL NOT BE ATTACHED TO A FAUCET OR HOSE BIBB UNLESS AN APPROVED BACKFLOW PREVENTER IS PROVIDED.
27. WATER SUPPLY TO CARBONATORS SHALL BE PROTECTED BY AN APPROVED REDUCED PRESSURE PRINCIPLE BACKFLOW PREVENTER. THE RELIEF VALVE SHALL DRAIN INDIRECTLY TO SEWER WITH A LEGAL AIR GAP.
28. FOR CLEANING FLOOR MATS, THE JANITORIAL SINK SHALL BE A MINIMUM 24" BY 36" FLOOR-MOUNTED TYPE. MOPS SHALL BE PLACED IN A POSITION THAT ALLOWS THEM TO AIR-DRY WITHOUT SOILING WALLS, EQUIPMENT, OR SUPPLIES.
29. THE JANITORIAL SINK FAUCET WILL HAVE A THREADED OUTER LIP FOR HOSE ATTACHMENT AND AN APPROVED BACKFLOW PREVENTION DEVICE. NO CHEMICAL DISPENSING SYSTEMS OR SHUTOFF VALVES TO BE ATTACHED TO MOP SINK FAUCET OUTLET UNLESS A "SIDEKICK" PLUMBING DEVICE IS INSTALLED).
30. NO CONDENSATE OR WASTEWATER INCLUDING HVAC WILL DRAIN INTO THE JANITORIAL SINK.
31. GREASE TRAP TO BE LOCATED OUTSIDE THE FOOD SERVICE ACTIVITY AREA, FLUSH WITH THE FINISHED FLOOR WHEN INDOORS. LOCAL WASTEWATER DISTRICT OR BUILDING DEPARTMENT TO BE CONTACTED FOR GREASE REMOVAL REQUIREMENTS.
32. FLOOR DRAINS SHALL BE INSTALLED IN FLOORS THAT ARE WATER-FLUSHED FOR CLEANING AND IN AREAS WHERE PRESSURE SPRAY METHODS FOR CLEANING EQUIPMENT ARE USED, IN RESTROOMS, JANITORIAL ROOMS, SCULLERIES, AND AT BARS WITH WAREWASHING. FLOOR SURFACES IN AREAS PURSUANT TO THIS SHALL BE SLOPED 1:50 TO THE FLOOR DRAINS.
33. ADEQUATE VENTILATION SHALL BE PROVIDED TO ALL TOILET ROOMS, JANITOR CLOSETS WITH MOP SINKS, INDOOR TRASH ROOMS AND IN DRESSING/ CHANGING ROOM(S).
34. THE FLOOR FINISH WILL SHALL HAVE A SMOOTH SURFACE UNDER ALL EQUIPMENT AND WALKWAYS WILL HAVE A LIGHT TEXTURE ONLY.
35. THE PAINT USED ON WALLS AND CEILINGS OF ALL KITCHEN, FOOD PREPARATION, WORK, STORAGE AREAS SHALL BE GLOSS OR SEMI-GLOSS ENAMEL. FINISH MATERIAL SHALL BE LIGHT COLOR IN FOOD PREP AREAS FOR EASY CLEANING.
36. PRIOR TO INSTALLATION, SAMPLES OF FINISHES SHALL BE SUBMITTED TO ENVIRONMENTAL HEALTH FOR APPROVAL AS NEEDED.
37. COLD STORAGE ROOMS SHALL BE PROVIDED WITH A SECTION OF SHELVING INSTALLED TO HOLD SHALLOW COOL DOWN PANS - NOT TO EXCEED 4" IN HEIGHT. SPACE BETWEEN SHELVING TO BE AT LEAST 8" HIGH.
38. BACKUP DRY STORAGE SHELVING SHALL BE A MINIMUM OF 96 LINEAR FEET (MEASURED WITH TIERS) OR 25% OF KITCHEN, FOOD PREP, AND WORK AREAS, WHICHEVER IS GREATER. SHELVING SHALL BE AT LEAST 18 INCHES DEEP AND START A MINIMUM SIX INCHES OFF THE FLOOR SURFACE.
39. SHELVING OVER WET AREAS (SINKS, MOP SINKS ETC.) AND FOOD PREP SURFACES SHALL BE METAL.
40. ALL SEAMS, GAPS, OPENINGS SHALL BE PROPERLY SEALED PER CODE.

FINISH SCHEDULE

REFER TO I.D. SHEETS FOR FINISH SCHEDULE

FINISH NOTES

1. ALL BASES IN ABOVE FINISH SCHEDULE SHALL BE A CONTINUOUS COVE BASE MINIMUM 4" HIGH W/ 3/8" RADIUS
2. ALL PAINTED AREAS SHALL BE ENAMEL SEMI-GLOSS LIGHT-COLORED, SMOOTH AND EASILY CLEANABLE, W/ 75% REFLECTANCE OR GREATER
3. ACOUSTIC PANEL SHALL BE ARMSTRONG CLEAN ROOM OR EQUAL.
4. SLIM FOOT TO BE HUNTINGTON PACIFIC CERAMIC MODEL # S3619T
5. GENERAL CONTRACTOR TO SUBMIT A SAMPLE OF CEILING TILE AND SLIM FOR TO HEALTH DEPARTMENT FOR APPROVAL PRIOR TO CONSTRUCTION
6. STAINED SEALED CONCRETE TO BE ACID AND GREASE RESISTANCE AND USDA APPROVED.

GENERAL NOTES

SCOPE OF WORK: NEW T.I. RESTAURANT WITH TYPE 1 EXHAUST HOOD

ESTABLISHMENT SQUARE FEET: 1,500

EMPLOYEES PER SHIFT: 5 PER SHIFT

WATER DISTRICT: CITY OF ROSEVILLE
SEWER DISTRICT: CITY OF ROSEVILLE

1. MULTIPLE SERVICE
2. ALCOHOL SOLD ON PREMISES
3. SNEEZE GUARDS NOT ARE REQUIRED

SHEET INDEX

FS-N	FOODSERVICE HEALTH DEPARTMENT NOTES
FS-1.0	FOODSERVICE EQUIPMENT PLAN
FS-2.0	FOODSERVICE EQUIPMENT SCHEDULE
FS-3.0	FOODSERVICE ELECTRICAL ROUGH-IN PLAN
FS-4.0	FOODSERVICE UNDERSLAB PLUMBING ROUGH-IN PLAN
FS-4.1	FOODSERVICE ABOVE SLAB PLUMBING ROUGH-IN PLAN
FS-5.0	FOODSERVICE EQUIPMENT ELEVATIONS
FS-6.0	FOODSERVICE EQUIPMENT SECTIONS
FS-B	FOODSERVICE WALL BACKING ROUGH-IN PLAN
FS-W1	WALK-IN DRAWINGS & SPECIFICATIONS
FS-W2	WALK-IN DRAWINGS & SPECIFICATIONS

NO REPRESENTATION IS MADE OR WILL BE MADE BY FOODSERVICE DESIGN GROUP (FSDG) OR ANY SUBCONSULTANT TO FSDG OR ITS SERVICES TO ANY OWNER OR OWNER'S REPRESENTATIVE OR ANY OTHER PERSON OR ENTITY REGARDING THE PROFITABILITY OR OTHER FINANCIAL MATTERS OF THE OWNER, THE PROJECT OR THE OPERATION OF THE PROJECT. FSDG AND ITS SUBCONSULTANTS MAKE NO REPRESENTATIONS OR WARRANTIES OF ANY KIND, EXPRESS OR IMPLIED, WITH REGARD TO THE ADEQUACY OR SUITABILITY OF THE PLANS AND SPECIFICATIONS FOR ANY PARTICULAR PURPOSE OR USE. FSDG AND ITS SUBCONSULTANTS SHALL NOT BE LIABLE FOR ANY LOSS, DAMAGE OR EXPENSE OF ANY KIND OR NATURE CAUSED OR ALLEGED TO BE CAUSED DIRECTLY OR INDIRECTLY BY THE PLANS AND SPECIFICATIONS. FSDG AND ITS SUBCONSULTANTS HAVE PROVIDED THE PLANS AND SPECIFICATIONS AND OTHER SERVICES PURSUANT TO THIS AGREEMENT ON THE BASIS OF THESE LIMITATIONS. THE OWNER AGREES TO DISTRIBUTE THESE LIMITATIONS TO ANY AND ALL SUBCONTRACTORS, AGENTS AND EMPLOYEES OF THE OWNER, AND TO OTHERWISE ASSUME THE ENTIRE LIABILITY FOR ALL PERSONS AND ENTITIES ARISING OUT OF THE OWNER'S FAILURE TO DISTRIBUTE THESE LIMITATIONS. THE OWNER FURTHER AGREES TO WAIVE ANY CLAIM AGAINST, AND TO INDEMNIFY AND HOLD HARMLESS, FSDG AND ITS SUBCONSULTANTS FOR ANY INJURY OR DAMAGE CONSISTING OF OR ARISING IN WHOLE OR IN PART FROM THE PLANS AND SPECIFICATIONS. THIS PLAN MUST BE VERIFIED BY FIELD WORK AND ON CORRECTIONS UNLESS OTHERWISE SPECIFICALLY PREPARED FOR IN THE PLANS AND SPECIFICATIONS. THIS PLAN MUST BE VERIFIED BY FIELD WORK AND ON CORRECTIONS UNLESS OTHERWISE SPECIFICALLY PREPARED FOR IN THE PLANS AND SPECIFICATIONS. ANY DIMENSIONS SHOWN ON EXISTING CONDITIONS MUST BE VERIFIED BY FIELD WORK BY THE CONTRACTOR PRIOR TO THE COMMENCEMENT OF ANY WORK HEREUNDER. ANY INCONSISTENCIES BETWEEN THESE PLANS AND THE GENERAL NOTES, OR BETWEEN THESE PLANS, THE GENERAL NOTES AND OTHER SPECIFICATIONS, SHALL BE REPORTED TO FSDG IMMEDIATELY UPON DISCOVERY. FSDG HAS PREPARED THE PLANS AND SPECIFICATIONS BASED ON REPRESENTATIONS MADE BY OWNER AND ON CONDITIONS AS THEY ARE KNOWN TO FSDG. FSDG HAS NOT MADE ANY INVESTIGATION OF THE SITE OR THE BUILDING. FSDG ASSUMES NO RESPONSIBILITY FOR ANY CONDITIONS THAT MAY BE DIFFERENT FROM OR IN ADDITION TO THOSE SHOWN ON THE PLANS AND SPECIFICATIONS. THIS PLAN MUST BE VERIFIED BY FIELD WORK AND ON CORRECTIONS UNLESS OTHERWISE SPECIFICALLY PREPARED FOR IN THE PLANS AND SPECIFICATIONS. FSDG ASSUMES NO RESPONSIBILITY FOR COMPLIANCE WITH LAWS AND REGULATIONS UNKNOWN TO FSDG AT THE TIME OF DESIGN. FSDG ASSUMES NO RESPONSIBILITY FOR COST OVERRUNS AND/OR DELAYS CAUSED BY DESIGN OR CONSTRUCTION IN SPACES NOT INSPECTED BY FSDG PRIOR TO DESIGN. ALL PLANS, SPECIFICATIONS, REPORTS, PAPERS AND OTHER WRITTEN MATERIALS PROVIDED BY FSDG PURSUANT TO THIS AGREEMENT ARE INTENDED FOR THE ORIGINAL PURPOSE FOR WHICH THEY WERE PREPARED AND DELIVERED. IT IS A VIOLATION OF THIS AGREEMENT FOR OWNER OR ANY OTHER PERSON OR ENTITY TO USE THE WRITTEN MATERIALS FOR ANY OTHER PURPOSE. ANY ALTERATION OF THE WRITTEN MATERIALS IS PROHIBITED AND IS A VIOLATION OF THIS AGREEMENT. OWNER AGREES TO RESOLVE ANY DISPUTES WITH ANY PERSON OR ENTITY DUE TO OWNER'S USE OF THE WRITTEN MATERIALS IN VIOLATION OF THIS AGREEMENT. OWNER AGREES TO INDEMNIFY AND HOLD FSDG HARMLESS FROM ANY CLAIM, INJURY OR DAMAGE ARISING FROM OR RELATED TO OWNER'S ALTERATION OF THE WRITTEN MATERIALS. OWNER'S ALTERATION OF THE WRITTEN MATERIALS IS ABSOLUTE EVIDENCE THAT OWNER HAS MADE THE ALTERATION FOR ITS OWN USE AND BENEFIT. OWNER AGREES THAT ANY DISPUTES OR INCONSISTENCIES CAN BE RESOLVED. THESE BY ANYONE EITHER ALONE OR IN PART WITHOUT FIRST SECURING THE WRITTEN PERMISSION OF FOOD SERVICE DESIGN GROUP.

TRASH DUMPSTER LOCATION

NOTE:
TRASH DUMPSTER LOCATION. ALL ENCLOSURE WALLS TO BE SEALED, SMOOTH AND PAINTED WITH SEMI-GLOSS ENAMEL OR EQUAL AND WITH 70% REFLECTANCE

FOODSERVICE DESIGN GROUP
FSDG
1202 MARKET STREET TEL: (619) 239-8156
SAN DIEGO, CA 92101 FAX: (619) 239-2686
www.fsdesigngroup.com
INNOVATIVE FOOD SERVICE DESIGN

FOODSERVICE CONSULTANT
MEN KO
FSDG
A.I.A. ALLIED MEMBER, U.S.A.

REVISIONS

1	X/X
2	X/X
3	X/X
4	X/X
5	X/X

ISSUE DATES

CLIENT	
DESIGN DEVELOPMENT	
HEALTH DEPARTMENT	
PERMIT SET	
CONSTRUCTION SET	

PROJECT NAME:
BURGER LOUNGE

PROJECT LOCATION:
1198 ROSEVILLE PARKWAY, STE 135
ROSEVILLE, CA 95661

DATE:	6-15-2018
SCALE:	NONE
PROJECT NUMBER:	191817

SHEET TITLE:
FOODSERVICE HEALTH DEPT NOTES

SHEET NUMBER
FS-N

ALL IDEAS, DESIGNS AND ARRANGEMENTS INDICATED ON THESE DRAWINGS ARE THE PROPERTY OF FOOD SERVICE DESIGN GROUP AND ARE TO BE USED IN CONNECTION WITH THIS SPECIFIC PROJECT AND SHALL NOT BE USED OTHERWISE WITHOUT THE EXPRESSED WRITTEN CONSENT OF FOOD SERVICE DESIGN GROUP. THERE SHALL BE NO CHANGES OR DEVIATION FROM THE DRAWINGS OR ACCOMPANYING SPECIFICATION WITHOUT THE EXPRESSED CONSENT OF FOOD SERVICE DESIGN GROUP

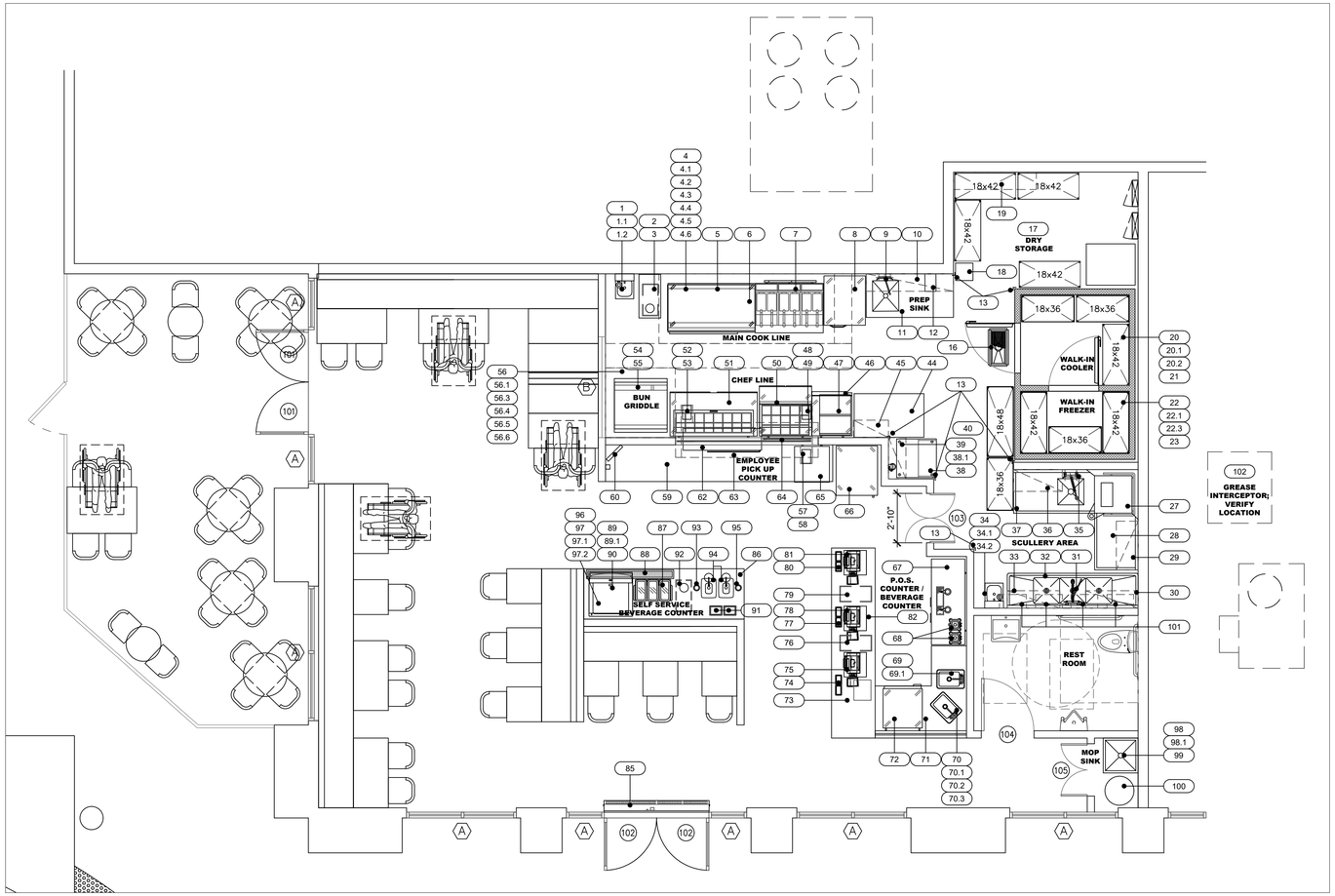

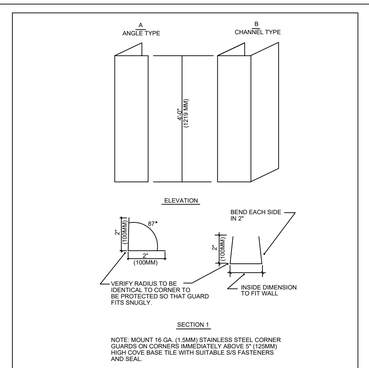

TYP. CORNER GUARD DETAIL: NOT TO SCALE

DOOR SCHEDULE			WINDOW SCHEDULE		
NO.	DESCRIPTION	TYPE	NO.	DESCRIPTION	TYPE
101	FRONT ENTRANCE	SELF-CLOSING, TIGHT FITTING	A	STOREFRONT WINDOW	FIXED, NON OPERABLE
102	DELIVERY ENTRANCE	SELF-CLOSING, TIGHT FITTING	B	INTERIOR KITCHEN WINDOW	FIXED, NON OPERABLE
103	KITCHEN (DOUBLE SWING DOOR)	SELF-CLOSING, TIGHT FITTING			
104	RESTROOM	SELF-CLOSING, TIGHT FITTING			
105	MOP SINK	SELF-CLOSING, TIGHT FITTING			

EQUIPMENT LIST

NO.	QTY	ITEM / DESCRIPTION
1	1	HAND SINK W/ MIN 6" SPLASH GUARDS
1.1	1	WALL MOUNTED SOAP DISPENSER
1.2	1	WALL MOUNTED TOWEL DISPENSER
2	1	WORK COUNTER W/ CUT OUT FOR TRASH
3	1	TRASH BIN
4	1	TYPE 1 EXHAUST HOOD W/ LIGHTS
4.1	1	EXHAUST FAN
4.2	1	MAKE UP AIR FAN
4.3	1	FIRE SUPPRESSION SYSTEM
4.4	2	GAS QUICK DISCONNECT
4.5	LOT	HOOD TRIM
4.6	LOT	WALL FLASHING
5	1	60" GRIDDLE
6	1	REFRIGERATED GRIDDLE STAND (SELD CONTAINED)
7	1	FRYER BATTERY
8	1	REACH-IN REFRIGERATOR / FREEZER, DUAL TEMP (SELF CONTAINED)
9	1	FAUCET
10	1	WALL SHELF
11	1	PREP TABLE W/ SINK
12	1	POTATO CUTTER
13	6	CORNER GUARD
16	1	FLOOR TROUGH
17	LOT	DRY STORAGE SHELVING (ON CASTERS)
18	1	EMPLOYEE LOCKER
19	1	A/V CABINET
20	1	WALK-IN COOLER W/ LIGHTS
20.1	1	WALK-IN COOLER CONDENSER (REMOTE)
20.2	1	WALK-IN COOLER COIL
21	LOT	DRY STORAGE SHELVING
22	1	WALK-IN FREEZER W/ LIGHTS
22.1	1	WALK-IN FREEZER CONDENSER (REMOTE)
22.2	1	WALK-IN FREEZER COIL
23	LOT	DRY STORAGE SHELVING
27	1	HIGH TEMP WAREWASHING, VENTLESS
28	1	CLEAN DISHTABLE
29	1	SORTING SELF
30	1	WALL SHELF
31	1	PRE-RINSE W/ ADD ON FAUCET
32	1	THREE COMPARTMENT SINK W/ 18"X18"X12" COMPARTMENTS AND DUAL 18" INTERGRAL DRAINBOARDS
33	1	WALL SHELF
34	1	HAND SINK W/ MIN 6" SPLASH GUARDS
34.1	1	WALL MOUNTED SOAP DISPENSER
34.2	1	WALL MOUNTED TOWEL DISPENSER
35	1	PRE-RINSE
36	1	SORTING SHELF
37	1	SOILED DISH TABLE W/ SCRAP SINK
38	1	ICE MAKER W/ BIN (SELF CONTAINED)
38.1	1	WATER FILTER FOR ITEM 38
39	1	WALL SHELF
40	LOT	DRY STORAGE SHELVING
44	1	WORK TABLE
45	1	WALL SHELF
46	1	UNDERCOUNTER REFRIGERATOR (SELF CONTAINED)
47	1	FOOD WARMER
48	1	P.O.S. PRINTER
49	1	PRINTER SHELF
50	1	SANDWICH PREP REFRIGERATOR (SELF CONTAINED)
51	1	SANDWICH PREP REFRIGERATOR (SELF CONTAINED)
52	1	PRINTER SHELF
53	1	P.O.S. PRINTER
54	1	WORK TABLE W/ PULL OUT SHELVES (ON CASTERS)
55	1	36' GRIDDLE
56	1	TYPE 1 EXHAUST HOOD W/ LIGHTS
56.1	1	EXHAUST FAN
56.3	1	FIRE SUPPRESSION SYSTEM
56.4	2	GAS QUICK DISCONNECT
56.5	LOT	HOOD TRIM
56.6	LOT	WALL FLASHING
57	1	P.O.S. PRINTER
58	1	PRINTER SHELF
59	1	EMPLOYEE PICK UP COUNTER
60	1	TO-GO STATION (PHONE AND MONITOR)
61		OMIT
62	1	OVERHEAD FOOD WARMER
63	1	DOUBLE OVER SHELF
64	2	LED LIGHTING
65	1	UNDERCOUNTER REFRIGERATOR (SELF CONTAINED)
66	1	REACH-IN REFRIGERATOR , GLASS DOOR (SELF CONTAINED)
67	1	BEER DISPENSER W/ TAPS AND DRIP PAN (SELF CONTAINED)
68	2	BEVERAGE BLENDER
69	1	DROP-IN DUMP SINK
69.1	1	FAUCET
70	1	DROP-IN HAND SINK W/ MIN 6" SPLASH GUARDS
70.1	1	FAUCET
70.2	1	WALL MOUNTED SOAP DISPENSER
70.3	1	WALL MOUNTED TOWEL DISPENSER
71	1	BEVERAGE COUNTER
72	1	UNDERCOUNTER FREEZER (SELF CONTAINED)
73	1	P.O.S. COUNTER
74	1	UTENSIL CONTAINER
75	1	P.O.S. SYSTEM
76	1	TRASH BIN
77	1	UTENSIL CONTAINER
78	1	P.O.S. SYSTEM
79	1	TRASH BIN
80	1	UTENSIL CONTAINER
81	1	P.O.S. SYSTEM
82	1	SAFE
85	1	AIR CURTAIN
86	1	CUSTOMER BEVERAGE COUNTER
87	1	BEVERAGE DISPENSER
88	1	BEVERGE COUNTER DRIP TROUGH
89	1	ICE MACHINE (SELF CONTAINED)
89.1	1	WATER FILTER FOR ITEM 89
90	1	SODA DISPENSER
91	2	NAPKIN DISPENSER
92	1	TRASH BIN
93	1	PORTION CUP DISPENSER
94	2	KETCHUP PUMP
95	1	PORTION CUP DISPENSER
96	1	B.I.B. SYSTEM
97	1	CARBONATOR
97.1	1	BACK FLOW PREVENTOR
97.2	1	WATER FILTER FOR ITEM 97
98	1	MOP SINK (24"X24", FLOOR MOUNTED)
98.1	1	SERVICE FAUCET
99	1	JANITORIAL SHELF W/ MOP AND BROOM RACK
100	1	BULK CO2 TANK
101	4	TANKLESS WATER HEATER
102	1	GREASE INTERCEPTOR

FOOD SERVICE DESIGN GROUP
FSDG
INNOVATIVE FOOD SERVICE DESIGN
1202 MARKET STREET TEL: (619) 239-8156
SAN DIEGO, CA 92101 FAX: (619) 239-2686
www.fsdesigngroup.com

FOODSERVICE CONSULTANT
WEN KO
A.I.A. ALLIED MEMBER, IN
FSDG

REVISIONS
1 X
2 X
3 X
4 X
5 X

ISSUE DATES
CLIENT
DESIGN DEVELOPMENT
HEALTH DEPARTMENT
PERMIT SET
CONSTRUCTION SET

PROJECT NAME:
BURGER LOUNGE

PROJECT LOCATION:
1198 ROSEVILLE PARKWAY, STE 135
ROSEVILLE, CA 95661

DATE: 6-15-2018
SCALE: 1/4" = 1'-0"

PROJECT NUMBER: 191817

SHEET TITLE:
FOODSERVICE EQUIPMENT FLOOR PLAN

SHEET NUMBER
FS-1.0

ALL IDEAS, DESIGNS AND ARRANGEMENTS INDICATED ON THESE DRAWINGS ARE THE PROPERTY OF FOOD SERVICE DESIGN GROUP AND ARE TO BE USED IN CONNECTION WITH THIS SPECIFIC PROJECT AND SHALL NOT BE USED OTHERWISE WITHOUT THE EXPRESSED WRITTEN CONSENT OF FOOD SERVICE DESIGN GROUP. THERE SHALL BE NO CHANGES OR DEVIATION FROM THE DRAWINGS OR ACCOMPANYING SPECIFICATION WITHOUT THE EXPRESSED CONSENT OF FOOD SERVICE DESIGN GROUP

KITCHEN EQUIPMENT SCHEDULE

EQUIPMENT					ELECTRICAL							PLUMBING									REMARKS
										CONNECT		SUPPLY		WASTE					GAS		
												P.O.C.		SIZE	DIR	INDIRECT			SIZE	MBH	
NO.	QTY	DESCRIPTION	MANUFACTURER	MODEL #	V	PH	AMP	KW	HP	WIRED DIR	CORD/ PLUG	HOT	COLD			FD	FS	TD			
1	1	HAND SINK W/ MIN 6" SPLASH GUARDS	JOHNSON ROSE	81401								1/2"	1/2"	1 1/2"	X						
1.1	1	WALL MOUNTED SOAP DISPENSER	BOBRICK	2111																	
1.2	1	WALL MOUNTED TOWEL DISPENSER	BOBRICK	2620																	
2	1	WORK COUNTER W/ CUT OUT FOR TRASH	CUSTOM STAINLESS STEEL																		
3	1	TRASH BIN	BY OWNER																		
4	1	TYPE 1 EXHAUST HOOD W/ LIGHTS	CAPTIVE AIR		120	1	15.0			X											
4.1	1	EXHAUST FAN	CAPTIVE AIR		208	3	6.6			X											VERIFY LOCATION WITH ARCHITECT AND MECHANICAL ENGINEER
4.2	1	MAKE UP AIR FAN	CAPTIVE AIR		208	3	6.1			X											VERIFY LOCATION WITH ARCHITECT AND MECHANICAL ENGINEER
4.3	1	FIRE SUPPRESSION SYSTEM	ANSUL																		
4.4	2	GAS QUICK DISCONNECT	DORMONT MANUFACTURING																		VERIFY SIZES WITH KEC
4.5	LOT	HOOD TRIM	CUSTOM STAINLESS STEEL																		
4.6	LOT	WALL FLASHING	CUSTOM STAINLESS STEEL																		
5	1	60" GRIDDLE	MAGIKITCH'N	MKG60-ST	115	1	1.1				5-15P								3/4"	150	NATURAL GAS
6	1	REFRIGERATED GRIDDLE STAND (SELD CONTAINED)	CONTINENTAL REFRIGERATOR	DL60G	115	1	5.7		1/4		5-15P										
7	1	FRYER BATTERY	PITCO	3-SG14RD-S/FD	115	1	7.0				5-15P								1 1/4"	366	NATURAL GAS
					115	1	3.0				5-15P										
8	1	REACH-IN REFRIGERATOR / FREEZER, DUAL TEMP (SELF CONTAINED)	CONTINENTAL REFRIGERATOR	1RFE-HD	120	1	5.3	0.20			5-15P										
					120	1	5.4				5-15P										
9	1	FAUCET	T & S BRASS	B-0221								1/2"	1/2"								
10	1	WALL SHELF	CUSTOM STAINLESS STEEL	NSF APPROVED																	
11	1	PREP TABLE W/ SINK	CUSTOM STAINLESS STEEL	NSF APPROVED										1 1/2"			X				
12	1	POTATO CUTTER	NEMCO	EASY FRYCUTTER																	
13	6	CORNER GUARD	CUSTOM STAINLESS STEEL																		
16	1	FLOOR TROUGH	CUSTOM STAINLESS STEEL											2"	X						
17	LOT	DRY STORAGE SHELVING (ON CASTERS)	WINCO																		FIVE TIERS HIGH
18	1	EMPLOYEE LOCKER	GSW-USA																		
19	1	A/V CABINET	BY OWNER																		
20	1	WALK-IN COOLER W/ LIGHTS	KOL PAK		115	1	15.0			X											
20.1	1	WALK-IN COOLER CONDENSER (REMOTE)	KOL PAK	KPC48MOP-2E	208-230	1	4.6		1/2	X											VERIFY LOCATION WITH ARCHITECT AND MECHANICAL ENGINEER
20.2	1	WALK-IN COOLER COIL	KOL PAK	KAM16-052-1EC-PR-8	115	1	0.8			X				1"			X				
21	LOT	DRY STORAGE SHELVING	WINCO																		FOUR TIERS HIGH
22	1	WALK-IN FREEZER W/ LIGHTS	KOL PAK		115	1	15.0			X											
22.1	1	WALK-IN FREEZER CONDENSER (REMOTE)	KOL PAK	PC198LZPO-2E	208-230	1	15.0		2	X											
22.2	1	WALK-IN FREEZER COIL	KOL PAK	ASLE25-58-2EC-PR-8	208-230	1	15.0			X				1"			X				
23	LOT	DRY STORAGE SHELVING	WINCO																		FOUR TIERS HIGH
27	1	HIGH TEMP WAREWASHING, VENTLESS	ECOLAB	EHT-V	208	3	56.4		1	X		1/2"	1/2"	2"			X				VENTLESS MODEL; LEASED BY OWNER; COLD WATER CONNECTION FOR VAPOR VENT SYSTEM; REQUIRED TO DRAIN TO SANITARY WASTE PER 2016 C.P.C.
28	1	CLEAN DISHTABLE	CUSTOM STAINLESS STEEL	NSF APPROVED																	
29	1	SORTING SELF	CUSTOM STAINLESS STEEL	NSF APPROVED																	
30	1	WALL SHELF	CUSTOM STAINLESS STEEL	NSF APPROVED																	
31	1	PRE-RINSE W/ ADD ON FAUCET	T & S BRASS	B-0331-01								1/2"	1/2"								
32	1	THREE COMPARTMENT SINK W/ 18"X18"X12" COMPARTMENTS AND DUAL 18" INTERGRAL DRAINBOARDS	CUSTOM STAINLESS STEEL	NSF APPROVED										1 1/2"			X				
33	1	WALL SHELF	CUSTOM STAINLESS STEEL	NSF APPROVED																	
34	1	HAND SINK W/ MIN 6" SPLASH GUARDS	JOHNSON ROSE	81401								1/2"	1/2"	1 1/2"	X						
34.1	1	WALL MOUNTED SOAP DISPENSER	BOBRICK	2111																	
34.2	1	WALL MOUNTED TOWEL DISPENSER	BOBRICK	2620																	
35	1	PRE-RINSE	T & S BRASS	B-0133								1/2"	1/2"								
36	1	SORTING SHELF	CUSTOM STAINLESS STEEL	NSF APPROVED																	
37	1	SOILED DISH TABLE W/ SCRAP SINK	CUSTOM STAINLESS STEEL	NSF APPROVED										1 1/2"			X				
38	1	ICE MAKER W/ BIN (SELF CONTAINED)	SCOTSMAN	CU2026MA-1	115	1	15.0			X			1/2"	3/4"			X				WATER CONNECTION THRU WATER FILTER ITEM 38.1
38.1	1	WATER FILTER FOR ITEM 38	3M PURIFICATION	ICE140-S									1/2"								
39	1	WALL SHELF	CUSTOM STAINLESS STEEL	NSF APPROVED																	
40	LOT	DRY STORAGE SHELVING	WINCO																		FIVE TIERS HIGH
44	1	WORK TABLE	CUSTOM STAINLESS STEEL	NSF APPROVED																	
45	1	WALL SHELF	CUSTOM STAINLESS STEEL	NSF APPROVED																	
46	1	UNDERCOUNTER REFRIGERATOR (SELF CONTAINED)	CONTINENTAL REFRIGERATOR	DLUC27-SS	115	1	6.3				5-15P										
47	1	FOOD WARMER	HATCO	GRFHS-21	120	1	10.0	1.20			5-15P										
48	1	P.O.S. PRINTER	BY OWNER		120	1	5.0				5-15P										ELECTRICAL CONNECTION ON CHASE OF DOUBLE OVER SHELF ITEM 63
49	1	PRINTER SHELF	CUSTOM STAINLESS STEEL	NSF APPROVED																	
50	1	SANDWICH PREP REFRIGERATOR (SELF CONTAINED)	CONTINENTAL REFRIGERATOR	DL36-15M-FB	115	1	6.3				5-15P										
51	1	SANDWICH PREP REFRIGERATOR (SELF CONTAINED)	CONTINENTAL REFRIGERATOR	SW60-16	115	1	8.2				5-15P										
52	1	PRINTER SHELF	CUSTOM STAINLESS STEEL	NSF APPROVED																	
53	1	P.O.S. PRINTER	BY OWNER		120	1	5.0				5-15P										ELECTRICAL CONNECTION ON CHASE OF DOUBLE OVER SHELF ITEM 63
54	1	WORK TABLE W/ PULL OUT SHELVES (ON CASTERS)	CUSTOM STAINLESS STEEL	NSF APPROVED																	
55	1	36' GRIDDLE	MAGIKITCH'N	MKG36-ST	115	1	0.7				5-15P								3/4"	90	NATURAL GAS
56	1	TYPE 1 EXHAUST HOOD W/ LIGHTS	CAPTIVE AIR		120	1	15.0			X											
56.1	1	EXHAUST FAN	CAPTIVE AIR		115	1	5.6			X											VERIFY LOCATION WITH ARCHITECT AND MECHANICAL ENGINEER
56.3	1	FIRE SUPPRESSION SYSTEM	ANSUL																		
56.4	2	GAS QUICK DISCONNECT	DORMONT MANUFACTURING																		VERIFY SIZES WITH KEC
56.5	LOT	HOOD TRIM	CUSTOM STAINLESS STEEL																		
56.6	LOT	WALL FLASHING	CUSTOM STAINLESS STEEL																		
57	1	P.O.S. PRINTER	BY OWNER		120	1	5.0				5-15P										ELECTRICAL CONNECTION ON CHASE OF DOUBLE OVER SHELF ITEM 63
58	1	PRINTER SHELF	CUSTOM STAINLESS STEEL	NSF APPROVED																	
59	1	EMPLOYEE PICK UP COUNTER	CUSTOM STAINLESS STEEL																		
60	1	TO-GO STATION (PHONE AND MONITOR)	BY OWNER		120	1	5.0				5-15P										
61		OMIT																			
62	1	OVERHEAD FOOD WARMER	HATCO	GRAHL-54D3	120/208	1	14.0	2.70													ELECTRICAL CONNECTION ON CHASE OF DOUBLE OVER SHELF ITEM 63
63	1	DOUBLE OVER SHELF	CUSTOM STAINLESS STEEL	NSF APPROVED																	
64	2	LED LIGHTING	CUSTOM		120	1	5.0														ELECTRICAL CONNECTION ON CHASE OF DOUBLE OVER SHELF ITEM 63; VERIFY LENGTH
65	1	UNDERCOUNTER REFRIGERATOR (SELF CONTAINED)	TRUE FOOD SERVICE	TUC-24	115	1	2.5		1/8		5-15P										
66	1	REACH-IN REFRIGERATOR , GLASS DOOR (SELF CONTAINED)	CONTINENTAL REFRIGERATOR	1RE-GD	120	1	6.9		1/4		5-15P										
67	1	BEER DISPENSER W/ TAPS AND DRIP PAN (SELF CONTAINED)	CONTINENTAL REFRIGERATOR	KC59S-SS	115	1	3.8		1/3		5-15P										
68	2	BEVERAGE BLENDER	HAMILTON BEACH	HBH750	120	1	8.6				5-15P										
69	1	DROP-IN DUMP SINK	ADVANCE TABCO	DI-1-10										1 1/2"			X				
69.1	1	FAUCET	T & S BRASS	B-1110								1/2"	1/2"								
70	1	DROP-IN HAND SINK W/ MIN 6" SPLASH GUARDS	ADVANCE TABCO	DI-1-10SP										1 1/2"	X						
70.1	1	FAUCET	T & S BRASS	B-1110								1/2"	1/2"								
70.2	1	WALL MOUNTED SOAP DISPENSER	BOBRICK	81401																	
70.3	1	WALL MOUNTED TOWEL DISPENSER	BOBRICK	2111																	
71	1	BEVERAGE COUNTER	CUSTOM STAINLESS STEEL	NSF APPROVED																	
72	1	UNDERCOUNTER FREEZER (SELF CONTAINED)	BEVERAGE-AIR	UCF27	115	1	6.0		1/4		5-15P										WITH 2 3/4" CASTERS
73	1	P.O.S. COUNTER	CUSTOM STAINLESS STEEL	NSF APPROVED																	
74	1	UTENSIL CONTAINER	BY OWNER																		
75	1	P.O.S. SYSTEM	BY OWNER		120	1	15.0				5-15P										
76	1	TRASH BIN	BY OWNER																		
77	1	UTENSIL CONTAINER	BY OWNER																		
78	1	P.O.S. SYSTEM	BY OWNER		120	1	15.0				5-15P										
79	1	TRASH BIN	BY OWNER																		
80	1	UTENSIL CONTAINER	BY OWNER																		
81	1	P.O.S. SYSTEM	BY OWNER		120	1	15.0				5-15P										
82	1	SAFE	BY OWNER																		
85	1	AIR CURTAIN	BERNER	SLC07-1072A	208	1	1.7			X											
86	1	CUSTOMER BEVERAGE COUNTER	CUSTOM MILLWORK	NSF APPROVED																	BY G.C.; VERIFY DESIGN WITH OWNERSHIP AND ARCHITECT
87	1	BEVERAGE DISPENSER	CRATHCO	D35-3	115	1	8.5		1/3		5-15P										
88	1	BEVERGE COUNTER DRIP TROUGH	CUSTOM STAINLESS STEEL	NSF APPROVED										1/2"			X				
89	1	ICE MACHINE (SELF CONTAINED)	HOSHIZAKI	KM-901MAH	208-230	1	11.0			X			1/2"	3/8"			X				WATER CONNECTION THRU WATER FILTER ITEM 89.1
89.1	1	WATER FILTER FOR ITEM 89	3M PURIFICATION	ICE140-S									1/2"								
90	1	SODA DISPENSER	BY VENDOR		120	1	5.0				5-15P										
91	2	NAPKIN DISPENSER	SAN JAMAR	H2005CLSS																	
92	1	TRASH BIN	BY OWNER																		
93	1	PORTION CUP DISPENSER	SAN JAMAR	C2010C																	
94	2	KETCHUP PUMP	SERVER PRODUCTS	CP-RP																	
95	1	PORTION CUP DISPENSER	SAN JAMAR	C2010C																	
96	1	B.I.B. SYSTEM	BY VENDOR																		
97	1	CARBONATOR	BY VENDOR		120	1	5.0				5-15P		1/2"	1/2"			X				
97.1	1	BACK FLOW PREVENTOR	BY PLUMBING CONTRACTOR																		
97.2	1	WATER FILTER FOR ITEM 97	3M PURIFICATION										1/2"								
98	1	MOP SINK (24"X24", FLOOR MOUNTED)	BY PLUMBING CONTRACTOR											2"	X						
98.1	1	SERVICE FAUCET	BY PLUMBING CONTRACTOR										1/2"	1/2"							
99	1	JANITORIAL SHELF W/ MOP AND BROOM RACK	ADVANCE TABCO	K-245																	
100	1	BULK CO2 TANK	BY VENDOR																		
101	4	TANKLESS WATER HEATER	BY PLUMBING CONTRACTOR		VER	V	VER			X			VER						VER	VER	
102	1	GREASE INTERCEPTOR	BY PLUMBING CONTRACTOR																		VERIFY LOCATION; NOT TO BE INSTALLED OR SERVICED THRU ANY FOOD SERVICE AREA

ALL IDEAS, DESIGNS AND ARRANGEMENTS INDICATED ON THESE DRAWINGS ARE THE PROPERTY OF FOOD SERVICE DESIGN GROUP AND ARE TO BE USED IN CONNECTION WITH THIS SPECIFIC PROJECT AND SHALL NOT BE USED OTHERWISE WITHOUT THE EXPRESSED WRITTEN CONSENT OF FOOD SERVICE DESIGN GROUP. THERE SHALL BE NO CHANGES OR DEVIATION FROM THE DRAWINGS OR ACCOMPANYING SPECIFICATION WITHOUT THE EXPRESSED CONSENT OF FOOD SERVICE DESIGN GROUP

U.S. GREEN BUILDING COUNCIL LEED AP

FOOD SERVICE DESIGN GROUP
FSDG
INNOVATIVE FOOD SERVICE DESIGN
1202 MARKET STREET TEL: (619) 239-8156
SAN DIEGO, CA 92101 FAX: (619) 239-2686
www.fsdesigngroup.com

FOODSERVICE CONSULTANT
WEN KO
FSDG
A.I.A. ALLIED MEMBER

REVISIONS

1	X
2	X
3	X
4	X
5	X

ISSUE DATES

CLIENT
DESIGN DEVELOPMENT
HEALTH DEPARTMENT
PERMIT SET
CONSTRUCTION SET

PROJECT NAME: BURGER LOUNGE

PROJECT LOCATION: 1198 ROSEVILLE PARKWAY, STE 135 ROSEVILLE, CA 95661

DATE: 6-15-2018
SCALE: N/A

PROJECT NUMBER: 191817

SHEET TITLE: FOODSERVICE EQUIPMENT SCHEDULE

SHEET NUMBER
FS-2.0

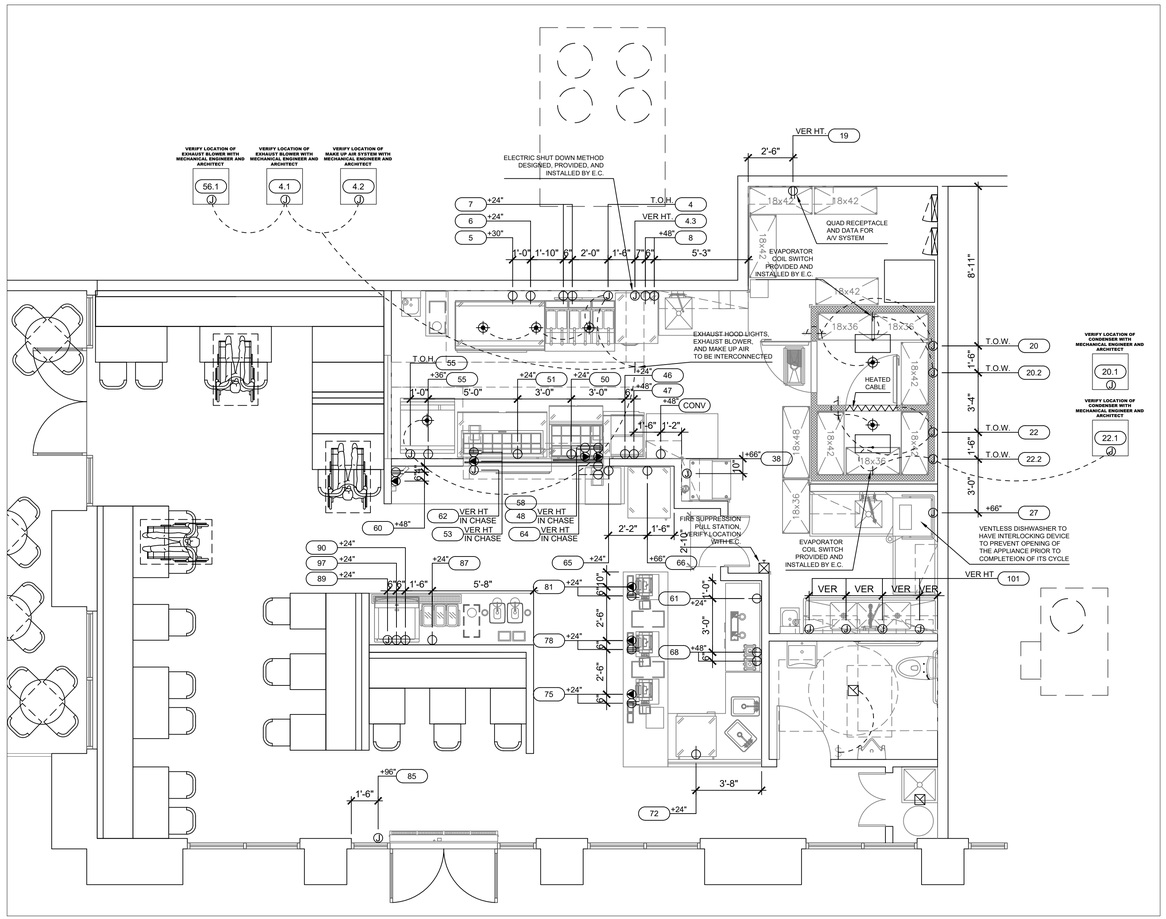

GENERAL NOTES

A. ALL ELECTRICAL ROUGH-INS SHOWN ON THIS PLAN ARE FOR FIXTURES AND EQUIPMENT SPECIFIED AS FURNISHED BY THE KITCHEN EQUIPMENT CONTRACTOR, UNLESS OTHERWISE NOTED. FOR ANY ADDITIONAL CONVENIENCE OUTLETS AND POWER NEEDED FOR NON FOOD SERVICE EQUIPMENT REFER TO ALL OTHER ELECTRICAL DRAWINGS & REQUIREMENTS.

B. ELECTRICAL CONTRACTOR MUST VERIFY EQUIPMENT BEING USED SO THAT THE SERVICE REQUIREMENTS ARE ADEQUATELY SIZED AND ROUGHED-IN PROPERLY (LOCATION & HEIGHT) SO AS TO MINIMIZE THE AMOUNT OF MATERIALS & FITTINGS NEEDED FOR FINAL HOOKUP RESULTING IN A NEAT AND ORDERLY LOOKING JOB. ALL DIMENSIONS FOR ITEM'S RUNNING UNDER SLAB ARE FROM CENTER LINE OF COLUMN, OR OUTSIDE EDGE OF SLAB, TO CENTER OF ROUGH-IN'S. ALL OTHER DIMENSIONS ARE FROM FACE STUD.

C. ALL OUTLETS & J-BOXES ARE TO BE SET HORIZONTALLY, MOUNTED FLUSH UNLESS NOTED OTHERWISE. ALL 120V OUTLETS NOT DESIGNATED WITH SPECIFIC LOADS, TO BE RATED AT 15 AMPS WITH MINIMUM LOOPING.

D. ALL SERVICES SHOWN WITH SYMBOLS CENTERED ON FACE OF WALL SHOULD BE BROUGHT TO THAT POINT CONCEALED IN WALL AND STUBBED OUT OF WALL CENTERED AT HEIGHT SHOWN. DO NOT STUB OUT OF FLOOR AND RUN EXPOSED UP FACE OF WALL.

E. ELECTRICAL CONTRACTOR SHALL BRANCH TO CONNECTIONS WHERE REQUIRED AND CONNECT ALL ELECTRICAL EQUIPMENT, FIXTURES, INCLUDING INTERNAL WIRING REQUIRED IN FIXTURES AND APPLIANCES AS REQUIRED BY CODE, SPECIFICATIONS AND/OR DRAWINGS.

F. ALL LABOR, SWITCHES, STARTERS, DISCONNECTS & FITTINGS REQUIRED FOR FOR FINAL CONNECTION OF EQUIPMENT AS NECESSARY TO COMPLY WITH ALL CODES, INCLUDING ALL INTER WIRING TO BE FURNISHED BY ELECTRICAL CONTRACTOR UNLESS SPECIFIED OTHERWISE IN FOOD SERVICE EQUIPMENT CONTRACT.

G. ALL ELECTRICAL OUTLET COVER PLATES ARE TO BE STAINLESS STEEL. THOSE REQUIRED IN BUILDING STRUCTURE ARE TO BE FURNISHED BY THE ELECTRICAL CONTRACTOR WITH RECEPTACLE. ALL MAIN BREAKER PANELS AND DISCONNECT SWITCHES REQUIRED BY OTHER ELECTRICAL DRAWINGS ARE TO BE FURNISHED AND INSTALLED BY THE ELECTRICAL CONTRACTOR AT TIME OF INSTALLATION.

H. ELECTRICAL CONTRACTOR TO PROVIDE TIE-IN WIRING BETWEEN FIRE PROTECTION SYSTEM BOTTLE CONTROL HEAD, MICRO-SWITCH AND COOKING EQUIPMENT TO COMPLY WITH APPLICABLE LOCAL CODE REQUIREMENTS FOR EMERGENCY SHUTDOWN OF ENTIRE COOKLINE EQUIPMENT AND ELECTRICAL POWER. SHUNT TRIP CIRCUITRY MAY BE REQUIRED, REFER TO ALL OTHER ELECTRICAL DRAWINGS & REQUIREMENTS.

M. ALL THREE (3) PHASE POWER CONNECTIONS TO BE ON A FOUR (4) WIRE SYSTEM. ALL SINGLE (1) PHASE POWER CONNECTIONS TO BE ON A THREE (3) WIRE SYSTEM UNLESS NOTED OTHERWISE.

O. ELECTRICAL CONTRACTOR SHALL RUN CONTROL WIRING BETWEEN WALK-IN COOLERS/ FREEZERS CONDENSER & EVAPORATOR, PULL WIRES FROM WALK-INS EVAPORATOR TO PANEL, SET ONE DISCONNECT PER EACH CONDENSING UNIT, INSTALL AND WIRE EXTRA LIGHTS IN WALK-IN COOLERS AND FREEZERS AS REQUIRED THRU DOOR SWITCH, WIRE HEAT STRIP TO SAME CIRCUIT AS WALK-IN LIGHTS AND PROVIDE WRAP AROUND HEATER CABLE ON ALL EVAPORATOR DRAIN LINES.

P. ELECTRICAL CONTRACTOR TO INSTALL HOOD LIGHTING, INTERCONNECT LIGHTS WHEN MORE THAN ONE LIGHT IS PROVIDED AND MAKE FINAL ELECTRICAL CONNECTIONS PER CODE.

FIRE DEPT NOTES

A. MOVABLE COOKING EQUIPMENT SHALL BE PROVIDED WITH A MEANS TO ENSURE THAT IT IS CORRECTLY POSITIONED IN RELATION TO THE APPLIANCE DISCHARGE NOZZLE DURING COOKING OPERATIONS, IN ACCORDANCE WITH NFPA 17A, 5.6.4. SEE DETAIL E ON FS-6.0

B. ALL HOOD PENETRATIONS SHALL BE SEALED, OTHERWISE MADE GREASETIGHT OR SHALL BE PERMITTED TO BE SEALED BY DEVICES THAT ARE LISTED FOR USE. DEVICES THAT REQUIRE PENETRATION OF THE HOOD SUCH AS A PIPE AND CONDUIT PENETRATION FITTING AND FASTENERS SHALL BE LISTED IN ACCORDANCE WITH UL 1978 STANDARD FOR GREASE DUCTS, CMC 507.2.1, 508.2.3, AND 510.5.3 ND NFPA 96, 5.1.3, 5.1.4, 5.1.11, AND 5.1.12

ELECTRICAL EQUIPMENT SCHEDULE

EQUIPMENT			ELECTRICAL						
NO	QTY	ITEM / DESCRIPTION	V	PH	AMP	KW	HP	CONNECT WIRED DIR	CONNECT CORD PLUG
4	1	TYPE 1 EXHAUST HOOD W/ LIGHTS	120	1	15.0			X	
4.1	1	EXHAUST FAN	208	3	6.6			X	
4.2	1	MAKE UP AIR FAN	208	3	6.1			X	
5	1	60" GRIDDLE	115	1	1.1				5-15P
6	1	REFRIGERATED GRIDDLE STAND (SELD CONTAINED)	115	1	5.7		1/4		5-15P
7	1	FRYER BATTERY	115	1	7.0				5-15P
			115	1	3.0				5-15P
8	1	REACH-IN REFRIGERATOR / FREEZER, DUAL TEMP (SELF CONTAINED)	120	1	5.3	0.20			5-15P
			120	1	5.4				5-15P
20	1	WALK-IN COOLER W/ LIGHTS	115	1	15.0			X	
20.1	1	WALK-IN COOLER CONDENSER (REMOTE)	208-230	1	4.6		1/2	X	
20.2	1	WALK-IN COOLER COIL	115	1	0.8			X	
22	1	WALK-IN FREEZER W/ LIGHTS	115	1	15.0			X	
22.1	1	WALK-IN FREEZER CONDENSER (REMOTE)	208-230	1	15.0		2	X	
22.2	1	WALK-IN FREEZER COIL	208-230	1	15.0			X	
27	1	HIGH TEMP WAREWASHING, VENTLESS	208	3	56.4		1	X	
38	1	ICE MAKER W/ BIN (SELF CONTAINED)	115	1	15.0			X	
46	1	UNDERCOUNTER REFRIGERATOR (SELF CONTAINED)	115	1	6.3				5-15P
47	1	FOOD WARMER	120	1	10.0	1.20			5-15P
48	1	P.O.S. PRINTER	120	1	5.0				5-15P
50	1	SANDWICH PREP REFRIGERATOR (SELF CONTAINED)	115	1	6.3				5-15P
51	1	SANDWICH PREP REFRIGERATOR (SELF CONTAINED)	115	1	8.2				5-15P
53	1	P.O.S. PRINTER	120	1	5.0				5-15P
55	1	36' GRIDDLE	115	1	0.7				5-15P
56	1	TYPE 1 EXHAUST HOOD W/ LIGHTS	120	1	15.0			X	
56.1	1	EXHAUST FAN	115	1	5.6			X	
57	1	P.O.S. PRINTER	120	1	5.0				5-15P
60	1	TO-GO STATION (PHONE AND MONITOR)	120	1	5.0				5-15P
62	1	OVERHEAD FOOD WARMER	120/208	1	14.0	2.70			
64	2	LED LIGHTING	120	1	5.0				
65	1	UNDERCOUNTER REFRIGERATOR (SELF CONTAINED)	115	1	2.5		1/8		5-15P
66	1	REACH-IN REFRIGERATOR , GLASS DOOR (SELF CONTAINED)	120	1	6.9		1/4		5-15P
67	1	BEER DISPENSER W/ TAPS AND DRIP PAN (SELF CONTAINED)	115	1	3.8		1/3		5-15P
68	2	BEVERAGE BLENDER	120	1	8.6				5-15P
72	1	UNDERCOUNTER FREEZER (SELF CONTAINED)	115	1	6.0		1/4		5-15P
75	1	P.O.S. SYSTEM	120	1	15.0				5-15P
78	1	P.O.S. SYSTEM	120	1	15.0				5-15P
81	1	P.O.S. SYSTEM	120	1	15.0				5-15P
85	1	AIR CURTAIN	208	1	1.7			X	
87	1	BEVERAGE DISPENSER	115	1	8.5		1/3		5-15P
89	1	ICE MACHINE (SELF CONTAINED)	208-230	1	11.0			X	
90	1	SODA DISPENSER	120	1	5.0				5-15P
97	1	CARBONATOR	120	1	5.0				5-15P
101	4	TANKLESS WATER HEATER	VER	V	VER			X	

NOTE: REFER TO EQUIPMENT SCHEDULE ON SHEET FS-1.0 FOR ADDITIONAL REMARKS

ELECTRICAL LEGEND

	SINGLE OUTLET
	DUPLEX OUTLET
	I.G. POWER FOR P.O.S. SYSTEM
	DATA
	J-BOX (JUNCTION BOX)
	CONDUIT STUB-UP FROM FLOOR
	DISCONNECT SWITCH
	TELEPHONE
	REMOTE SWITCH
+12"	A.F.F. - ABOVE FINISHED FLOOR
E.C.	ELECTRICAL CONTRACTOR
CONV	CONVENIENCE OUTLET
	5 MIN. AIR EXCHANGE FAN, 12 EXCHANGES / HOUR
	FIRE PULL STATION

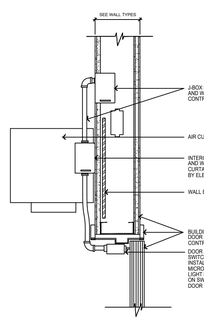

AIR CURTAIN DETAIL
SCALE | N.T.S.

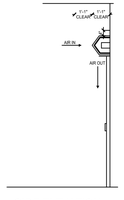

SIDE ELEVATION
SCALE |

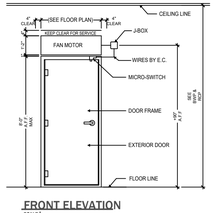

FRONT ELEVATION
SCALE |

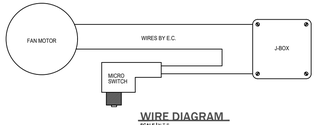

WIRE DIAGRAM
SCALE | N.T.S.

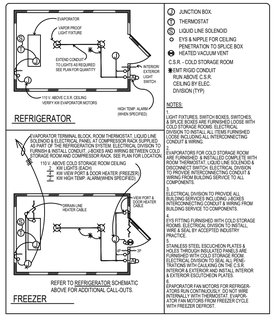

TYPICAL COLD STORAGE ROOMS ELEC. DIAGRAM
SCALE | N.T.S.

FOOD SERVICE DESIGN GROUP
FSDG
1202 MARKET STREET TEL: (619) 239-8156
SAN DIEGO, CA 92101 FAX: (619) 239-2686
www.fsdesigngroup.com
INNOVATIVE FOOD SERVICE DESIGN

FOODSERVICE CONSULTANTS
WEN KO
FSDG
A.I.A. ALLIED MEMBER, INC.

REVISIONS

ISSUE DATES
CLIENT
DESIGN DEVELOPMENT
HEALTH DEPARTMENT
PERMIT SET
CONSTRUCTION SET

PROJECT NAME: BURGER LOUNGE

PROJECT LOCATION: 1198 ROSEVILLE PARKWAY, STE 135 ROSEVILLE, CA 95661

DATE: 6-15-2018
SCALE: 1/4" = 1'-0"

PROJECT NUMBER: 191817

SHEET TITLE: FOODSERVICE ELECTRICAL ROUGH IN PLAN

SHEET NUMBER
FS-3.0

ALL IDEAS, DESIGNS AND ARRANGEMENTS INDICATED ON THESE DRAWINGS ARE THE PROPERTY OF FOOD SERVICE DESIGN GROUP AND ARE TO BE USED IN CONNECTION WITH THIS SPECIFIC PROJECT AND SHALL NOT BE USED OTHERWISE WITHOUT THE EXPRESSED WRITTEN CONSENT OF FOOD SERVICE DESIGN GROUP. THERE SHALL BE NO CHANGES OR DEVIATION FROM THE DRAWINGS OR ACCOMPANYING SPECIFICATION WITHOUT THE EXPRESSED CONSENT OF FOOD SERVICE DESIGN GROUP

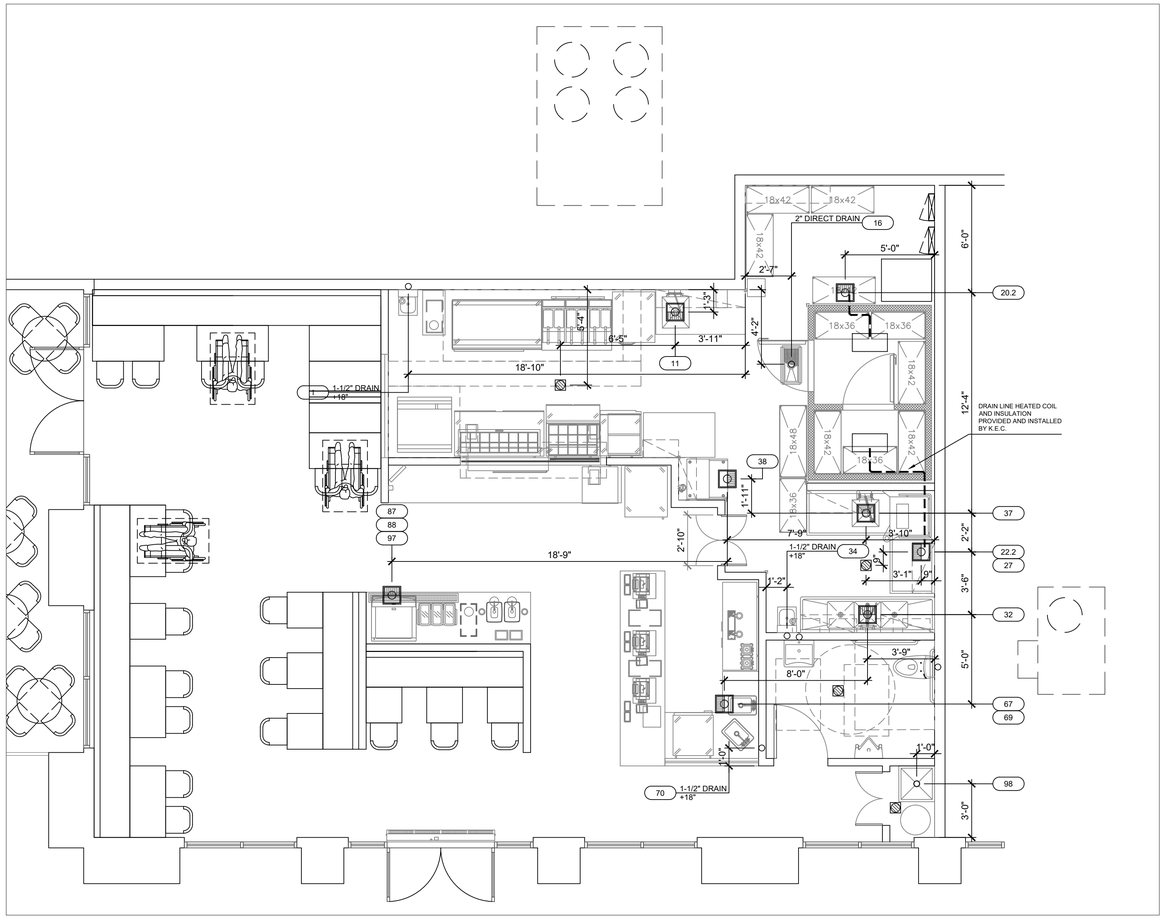

GENERAL NOTES

A. PLUMBING CONTRACTOR MUST VERIFY EQUIPMENT BEING USED SO THAT THE SERVICE REQUIREMENTS ARE ADEQUATELY SIZED AND ROUGHED-IN PROPERLY (LOCATION & HEIGHT), SO AS TO MINIMIZE THE AMOUNT OF MATERIALS AND FITTINGS NEEDED FOR FINAL HOOKUP RESULTING IN A NEAT & ORDERLY LOOKING JOB. ALL DIMENSIONS FOR ITEMS RUNNING UNDER SLAB ARE FROM CENTER LINE OF COLUMN TO CENTER OF ROUGH-IN'S. ALL OTHER DIMENSIONS ARE FROM FACE OF STUD.

B. ALL PLUMBING ROUGH-INS AND REQUIREMENTS SHOWN ON THIS SHEET ARE FOR FIXTURES AND EQUIPMENT FURNISHED BY THE KITCHEN EQUIPMENT SUPPLIER, UNLESS OTHERWISE NOTED. FOR ANY ADDITIONAL BUILDING PLUMBING REQUIREMENTS REFER TO ALL OTHER PLUMBING SHEETS.

C. PLUMBING SHALL NOT INTERFERE WITH OPERATION OR FUNCTION OF EQUIPMENT. SECURE TO EQUIPMENT, WALLS OR FLOOR AS REQUIRED BY CODE. ALL ROUGH-INS SHOWN ARE TO BE RUN INSIDE WALLS, (EXCEPT STUB-UPS). LOCATIONS INDICATE POINT OF EXIT FROM WALLS, CEILING OR FLOOR. ALL FLOOR & WALL PENETRATIONS MUST BE SEALED WATER TIGHT AND VERMIN PROOF.

D. ALL SERVICES SHOWN WITH SYMBOLS CENTERED ON FACE OF STUD WALL SHOULD BROUGHT TO THAT POINT CONCEALED IN WALL AND STUBBED OUT OF WALL CENTERED AT HEIGHT SHOWN . DO NOT STUB OUT OF FLOOR AND RUN EXPOSED UP FACE OF WALL.

E. RUN CONDENSATE LINES FROM UNITS TO DRAINS AS SHOWN, THIS LINE SHALL BE NO SMALLER THAN THE STUB OUT OF THE FIXTURE. CONDENSATE DRAIN LINES ARE TO BE INSULATED THEIR ENTIRE LENGTH. FOR SPECIFIC TYPE OF CONNECTION AND LOCATIONS REFER TO THE KITCHEN EQUIPMENT BROCHURES AND DRAWINGS.

F. ALL LABOR, VALVES, TRAPS, TAILPIECES, STRAINERS, WATER LINES, GAS LINES, CUT OFFS, TRAPS, HYDROSTATIC SHOCK ELIMINATORS, INDIVIDUAL SHUT OFF-VALVES, PRESSURE - REDUCING VALVES & FITTINGS REQUIRED FOR FINAL CONNECTIONS OF EQUIPMENT AS NECESSARY TO COMPLY WITH ALL CODES, INCLUDING ALL INTERCONNECTIONS, SHALL BE FURNISHED & INSTALLED BY PLUMBING CONTRACTOR UNLESS STATED OTHERWISE IN FOOD SERVICE EQUIPMENT CONTRACT OR GENERAL SPECIFICATIONS.

G. ALL GAS LINES TO BE PAINTED BLACK.

H. ALL FLOOR DRAINS ARE TO BE SET 1/2" BELOW FINISHED FLOOR UNLESS OTHERWISE NOTED. DO NOT SLOPE FLOORS SO CLOSE TO DRAINS AS TO CREATE "PITS" OR "DIPS" IN FLOOR. MINIMUM RADIUS OF SLOPE TO BE 24" FROM CENTERLINE OF DRAIN.

I. ALL FLOOR SINKS SHOWN ARE TO BE SET FLUSH WITH FINISHED FLOOR, TRAPPED WITH LEGAL AIR GAP.

J. IF ELECTROLYSIS CONDITIONS EXIST, A DIELECTRIC COUPLING SHOULD BE USED IN FINAL PLUMBING CONNECTION TO ALL WATER COOLED EQUIPMENT.

K. KITCHEN EQUIPMENT SUPPLIER TO PROVIDE ALL FAUCETS, DRAIN OUTLET FITTINGS IN FIXTURES AND SPECIALITY ITEMS AS OUTLINED IN THE ITEM AND GENERAL PRODUCT SPECIFICATIONS.

L. ALL WORK RELATING TO THE INSTALLATION & HOOKUP OF THE SPECIFIED EQUIPMENT IS TO BE PERFORMED IN FULL ACCORDANCE WITH ALL AUTHORITY HAVING JURISDICTION.

M. WALL PENETRATIONS FOR DRAIN LINES REQUIRE ESCUTCHEON PLATES.

N. ALL SERVICES SHOWN WITH SYMBOLS AWAY FROM ANY WALL OR COLUMN SHOULD BE STUBBED OUT OF FLOOR OR CEILING TO MAXIMUM OVERALL HEIGHT AS SHOWN.

O. PLUMBING CONTRACTOR SHALL PROVIDE & INSTALL ALL ROUGH-INS, FINAL CONNECTIONS FOR KITCHEN EQUIPMENT FURNISHED BY OTHERS OR THE CONTRACTOR.

P. PLUMBING CONTRACTOR TO PROVIDE & INSTALL ALL NECESSARY BACKFLOW PREVENTION DEVICES.

PLUMBING EQUIPMENT SCHEDULE

EQUIPMENT			PLUMBING								
			SUPPLY		WASTE					GAS	
NO	QTY	ITEM / DESCRIPTION	P. O. C.		SIZE	DIR	INDIRECT			SIZE	MBH
			HOT	COLD			FD	FS	TD		
1	1	HAND SINK W/ MIN 6" SPLASH GUARDS	1/2"	1/2"	1 1/2"	X					
5	1	60" GRIDDLE								3/4"	150
7	1	FRYER BATTERY								1 1/4"	366
9	1	FAUCET	1/2"	1/2"							
11	1	PREP TABLE W/ SINK			1 1/2"			X			
16	1	FLOOR TROUGH			2"	X					
20	1	WALK-IN COOLER COIL			1"			X			
22	1	WALK-IN FREEZER COIL			1"			X			
27	1	HIGH TEMP WAREWASHING, VENTLESS	1/2"	1/2"	2"			X			
31	1	PRE-RINSE W/ ADD ON FAUCET	1/2"	1/2"							
32	1	THREE COMPARTMENT SINK W/ 18"X18"X12" COMPARTMENTS AND DUAL 18" INTERGRAL DRAINBOARDS			1 1/2"			X			
34	1	HAND SINK W/ MIN 6" SPLASH GUARDS	1/2"	1/2"	1 1/2"	X					
35	1	PRE-RINSE	1/2"	1/2"							
37	1	SOILED DISH TABLE W/ SCRAP SINK			1 1/2"			X			
38	1	ICE MAKER W/ BIN (SELF CONTAINED)		1/2"	3/4"			X			
38.1	1	WATER FILTER FOR ITEM 38		1/2"							
55	1	36" GRIDDLE								3/4"	90
61	0	OMIT						0			
69	1	DROP-IN DUMP SINK			1 1/2"			X			
69.1	1	FAUCET	1/2"	1/2"							
70	1	DROP-IN HAND SINK W/ MIN 6" SPLASH GUARDS			1 1/2"	X					
70.1	1	FAUCET	1/2"	1/2"							
88	1	BEVERGE COUNTER DRIP TROUGH			1/2"			X			
89	1	ICE MACHINE (SELF CONTAINED)		1/2"	3/8"			X			
89.1	1	WATER FILTER FOR ITEM 89		1/2"							
97	1	CARBONATOR		1/2"	1/2"			X			
97.2	1	WATER FILTER FOR ITEM 97		1/2"							
98	1	MOP SINK (24"X24", FLOOR MOUNTED)			2"	X					
98.1	1	SERVICE FAUCET		1/2"	1/2"						
101	4	TANKLESS WATER HEATER		VER						VER	VER

NOTE: REFER TO EQUIPMENT SCHEDULE ON SHEET FS-1.0 FOR ADDITIONAL REMARKS

PLUMBING LEGEND

○	DIRECT WASTE
▭	TRENCH DRAIN (TD)
⊘	FLOOR DRAIN (FD)
	FLOOR DRAIN W/ 4" HIGH FUNNEL (FF)
	FLOOR SINK (FS)
◉	HUB DRAIN (HD)
FS	12"X12" FLOOR SINK
○—+	COLD WATER (C.W.)
●—+	HOT WATER (H.W.)
◉	GAS LINE
Ⓢ Ⓑ Ⓦ	SODA, BEER, WINE LINE CHASE
▬ ▬ ▬	INDIRECT DRAIN LINE AS REQUIRED
+12"	A.F.F. - ABOVE FINISHED FLOOR
P.C.	PLUMBING CONTRACTOR

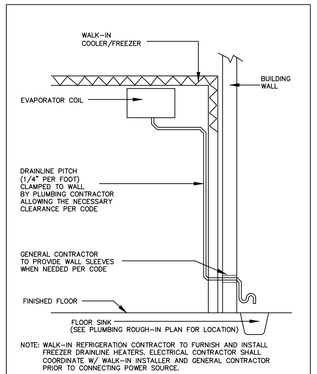

NOTE: WALK-IN REFRIGERATION CONTRACTOR TO FURNISH AND INSTALL FREEZER DRAINLINE HEATERS. ELECTRICAL CONTRACTOR SHALL COORDINATE W/ WALK-IN INSTALLER AND GENERAL CONTRACTOR PRIOR TO CONNECTING POWER SOURCE.

DRAINLINE DETAIL
WALK-IN COOLER/FREEZER

SCALE | NOT TO SCALE

FOOD SERVICE DESIGN GROUP
FSDG
1202 MARKET STREET TEL: (619) 239-8156
SAN DIEGO, CA 92101 FAX: (619) 239-2686
www.fsdesigngroup.com
INNOVATIVE FOOD SERVICE DESIGN

FOODSERVICE CONSULTANTS
WEN KO
FSDG
A.I.A. ALLIED MEMBER, IN

REVISIONS

1	X
2	X
3	X
4	X
5	X

ISSUE DATES

CLIENT
DESIGN DEVELOPMENT
HEALTH DEPARTMENT
PERMIT SET
CONSTRUCTION SET

PROJECT NAME:
BURGER LOUNGE

PROJECT LOCATION:
1198 ROSEVILLE PARKWAY, STE 135
ROSEVILLE, CA 95661

DATE: 6-15-2018
SCALE: 1/4" = 1'-0"

PROJECT NUMBER: 191817

SHEET TITLE:
FOODSERVICE UNDER SLAB PLUMBING ROUGH-IN PLAN

SHEET NUMBER
FS-4.0

ALL IDEAS, DESIGNS AND ARRANGEMENTS INDICATED ON THESE DRAWINGS ARE THE PROPERTY OF FOOD SERVICE DESIGN GROUP AND ARE TO BE USED IN CONNECTION WITH THIS SPECIFIC PROJECT AND SHALL NOT BE USED OTHERWISE WITHOUT THE EXPRESSED WRITTEN CONSENT OF FOOD SERVICE DESIGN GROUP. THERE SHALL BE NO CHANGES OR DEVIATION FROM THE DRAWINGS OR ACCOMPANYING SPECIFICATION WITHOUT THE EXPRESSED CONSENT OF FOOD SERVICE DESIGN GROUP

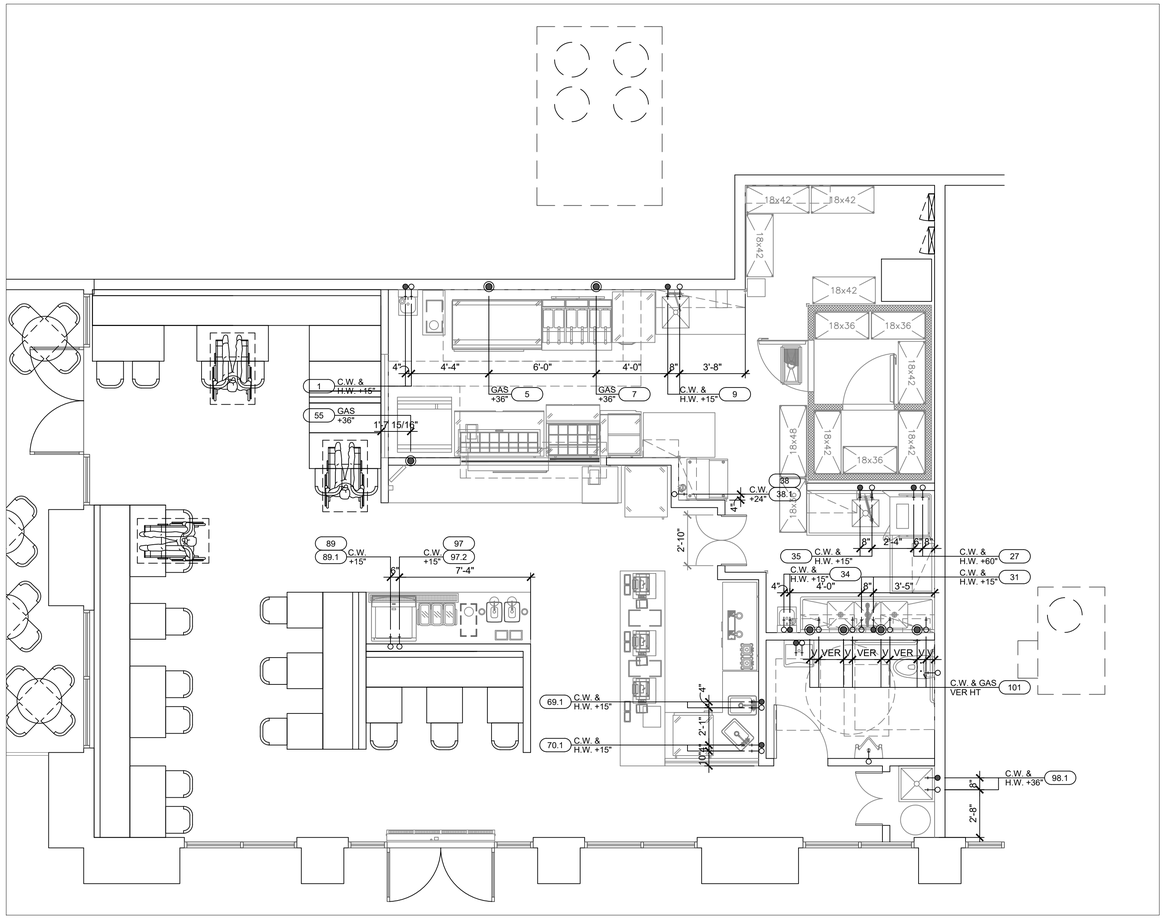

GENERAL NOTES

A. PLUMBING CONTRACTOR MUST VERIFY EQUIPMENT BEING USED SO THAT THE SERVICE REQUIREMENTS ARE ADEQUATELY SIZED AND ROUGHED-IN PROPERLY (LOCATION & HEIGHT), SO AS TO MINIMIZE THE AMOUNT OF MATERIALS AND FITTINGS NEEDED FOR FINAL HOOKUP RESULTING IN A NEAT & ORDERLY LOOKING JOB. ALL DIMENSIONS FOR ITEMS RUNNING UNDER SLAB ARE FROM CENTER LINE OF COLUMN TO CENTER OF ROUGH-IN'S. ALL OTHER DIMENSIONS ARE FROM FACE OF STUD.

B. ALL PLUMBING ROUGH-INS AND REQUIREMENTS SHOWN ON THIS SHEET ARE FOR FIXTURES AND EQUIPMENT FURNISHED BY THE KITCHEN EQUIPMENT SUPPLIER, UNLESS OTHERWISE NOTED. FOR ANY ADDITIONAL BUILDING PLUMBING REQUIREMENTS REFER TO ALL OTHER PLUMBING SHEETS.

C. PLUMBING SHALL NOT INTERFERE WITH OPERATION OR FUNCTION OF EQUIPMENT. SECURE TO EQUIPMENT, WALLS OR FLOOR AS REQUIRED BY CODE. ALL ROUGH-INS SHOWN ARE TO BE RUN INSIDE WALLS, (EXCEPT STUB-UPS). LOCATIONS INDICATE POINT OF EXIT FROM WALLS, CEILING OR FLOOR. ALL FLOOR & WALL PENETRATIONS MUST BE SEALED WATER TIGHT AND VERMIN PROOF.

D. ALL SERVICES SHOWN WITH SYMBOLS CENTERED ON FACE OF STUD WALL SHOULD BROUGHT TO THAT POINT CONCEALED IN WALL AND STUBBED OUT OF WALL CENTERED AT HEIGHT SHOWN . DO NOT STUB OUT OF FLOOR AND RUN EXPOSED UP FACE OF WALL.

E. RUN CONDENSATE LINES FROM UNITS TO DRAINS AS SHOWN, THIS LINE SHALL BE NO SMALLER THAN THE STUB OUT OF THE FIXTURE. CONDENSATE DRAIN LINES ARE TO BE INSULATED THEIR ENTIRE LENGTH. FOR SPECIFIC TYPE OF CONNECTION AND LOCATIONS REFER TO THE KITCHEN EQUIPMENT BROCHURES AND DRAWINGS.

F. ALL LABOR, VALVES, TRAPS, TAILPIECES, STRAINERS, WATER LINES, GAS LINES, CUT OFFS, TRAPS, HYDROSTATIC SHOCK ELIMINATORS, INDIVIDUAL SHUT OFF-VALVES, PRESSURE - REDUCING VALVES & FITTINGS REQUIRED FOR FINAL CONNECTIONS OF EQUIPMENT AS NECESSARY TO COMPLY WITH ALL CODES, INCLUDING ALL INTERCONNECTIONS, SHALL BE FURNISHED & INSTALLED BY PLUMBING CONTRACTOR UNLESS STATED OTHERWISE IN FOOD SERVICE EQUIPMENT CONTRACT OR GENERAL SPECIFICATIONS.

G. ALL GAS LINES TO BE PAINTED BLACK.

H. ALL FLOOR DRAINS ARE TO BE SET 1/2" BELOW FINISHED FLOOR UNLESS OTHERWISE NOTED. DO NOT SLOPE FLOORS SO CLOSE TO DRAINS AS TO CREATE "PITS" OR "DIPS" IN FLOOR. MINIMUM RADIUS OF SLOPE TO BE 24" FROM CENTERLINE OF DRAIN.

I. ALL FLOOR SINKS SHOWN ARE TO BE SET FLUSH WITH FINISHED FLOOR, TRAPPED WITH LEGAL AIR GAP.

J. IF ELECTROLYSIS CONDITIONS EXIST, A DIELECTRIC COUPLING SHOULD BE USED IN FINAL PLUMBING CONNECTION TO ALL WATER COOLED EQUIPMENT.

K. KITCHEN EQUIPMENT SUPPLIER TO PROVIDE ALL FAUCETS, DRAIN OUTLET FITTINGS IN FIXTURES AND SPECIALITY ITEMS AS OUTLINED IN THE ITEM AND GENERAL PRODUCT SPECIFICATIONS.

L. ALL WORK RELATING TO THE INSTALLATION & HOOKUP OF THE SPECIFIED EQUIPMENT IS TO BE PERFORMED IN FULL ACCORDANCE WITH ALL AUTHORITY HAVING JURISDICTION.

M. WALL PENETRATIONS FOR DRAIN LINES REQUIRE ESCUTCHEON PLATES.

N. ALL SERVICES SHOWN WITH SYMBOLS AWAY FROM ANY WALL OR COLUMN SHOULD BE STUBBED OUT OF FLOOR OR CEILING TO MAXIMUM OVERALL HEIGHT AS SHOWN.

O. PLUMBING CONTRACTOR SHALL PROVIDE & INSTALL ALL ROUGH-INS, FINAL CONNECTIONS FOR KITCHEN EQUIPMENT FURNISHED BY OTHERS OR THE CONTRACTOR.

P. PLUMBING CONTRACTOR TO PROVIDE & INSTALL ALL NECESSARY BACKFLOW PREVENTION DEVICES.

PLUMBING EQUIPMENT SCHEDULE

EQUIPMENT			PLUMBING								
			SUPPLY		WASTE					GAS	
NO	QTY	ITEM / DESCRIPTION	P. O. C.		SIZE	DIR	INDIRECT			SIZE	MBH
			HOT	COLD			FD	FS	TD		
1	1	HAND SINK W/ MIN 6" SPLASH GUARDS	1/2"	1/2"	1 1/2"	X					
5	1	60" GRIDDLE								3/4"	150
7	1	FRYER BATTERY								1 1/4"	366
9	1	FAUCET	1/2"	1/2"							
11	1	PREP TABLE W/ SINK			1 1/2"			X			
16	1	FLOOR TROUGH			2"	X					
20	1	WALK-IN COOLER COIL			1"			X			
22	1	WALK-IN FREEZER COIL			1"			X			
27	1	HIGH TEMP WAREWASHING, VENTLESS	1/2"	1/2"	2"			X			
31	1	PRE-RINSE W/ ADD ON FAUCET	1/2"	1/2"							
32	1	THREE COMPARTMENT SINK W/ 18"X18"X12" COMPARTMENTS AND DUAL 18" INTERGRAL DRAINBOARDS			1 1/2"			X			
34	1	HAND SINK W/ MIN 6" SPLASH GUARDS	1/2"	1/2"	1 1/2"	X					
35	1	PRE-RINSE	1/2"	1/2"							
37	1	SOILED DISH TABLE W/ SCRAP SINK			1 1/2"			X			
38	1	ICE MAKER W/ BIN (SELF CONTAINED)		1/2"	3/4"			X			
38.1	1	WATER FILTER FOR ITEM 38		1/2"							
55	1	36" GRIDDLE								3/4"	90
61	0	OMIT						0			
69	1	DROP-IN DUMP SINK			1 1/2"			X			
69.1	1	FAUCET	1/2"	1/2"							
70	1	DROP-IN HAND SINK W/ MIN 6" SPLASH GUARDS			1 1/2"	X					
70.1	1	FAUCET	1/2"	1/2"							
88	1	BEVERGE COUNTER DRIP TROUGH			1/2"			X			
89	1	ICE MACHINE (SELF CONTAINED)		1/2"	3/8"			X			
89.1	1	WATER FILTER FOR ITEM 89		1/2"							
97	1	CARBONATOR		1/2"	1/2"			X			
97.2	1	WATER FILTER FOR ITEM 97		1/2"							
98	1	MOP SINK (24"X24", FLOOR MOUNTED)			2"	X					
98.1	1	SERVICE FAUCET		1/2"	1/2"						
101	4	TANKLESS WATER HEATER		VER						VER	VER

NOTE: REFER TO EQUIPMENT SCHEDULE ON SHEET FS-1.0 FOR ADDITIONAL REMARKS

PLUMBING LEGEND

○	DIRECT WASTE
▭	TRENCH DRAIN (TD)
⊘	FLOOR DRAIN (FD)
⊘	FLOOR DRAIN W/ 4" HIGH FUNNEL (FF)
⊘	FLOOR SINK (FS)
○	HUB DRAIN (HD)
FS	12"X12" FLOOR SINK
○—+	COLD WATER (C.W.)
●—+	HOT WATER (H.W.)
◉	GAS LINE
(S)(B)(W)	SODA, BEER, WINE LINE CHASE
▬ ▬ ▬	INDIRECT DRAIN LINE AS REQUIRED
+12"	A.F.F. - ABOVE FINISHED FLOOR
P.C.	PLUMBING CONTRACTOR

TANKLESS WATER HEATER CALCULATIONS

PER HEALTH DEPARTMENT

1	MOP SINK	2 GPM
1	3 COMP POT SINK	2 GPM
1	DISHWASHER	2 GPM
1	SCRAP SINK	2 GPM
3	HAND SINK	1.5 GPM
1	FOOD PREP SINK	0.5 GPM
1	DUMP SINK	2 GPM
1	LAVATORY SINK	0.5 GPM
	TOTAL	12.5 GPM

TANKLESS WATER HEATER SPECIFICATION

MANUFACTURE: NORITZ
MODEL: 4 EA NCC1991
RISE @ 60°F: 6.2 GPM (24.8 GPM TOTAL)
RISE @ 50°F: 7.4 GPM (29.6 GPM TOTAL)
MAX BTUH: 199,900 EA

*TWO UNITS DEDICATED TO THE DISHWASHER.
*TWO UNITS DEDICATED FOR THE REST OF THE FACILITY.

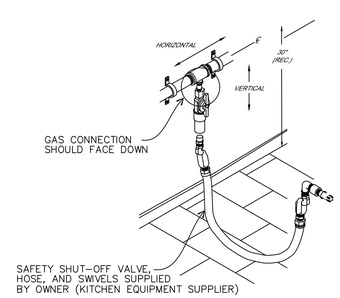

GAS CONNECTION DETAIL (TYP.)

SCALE | NOT TO SCALE

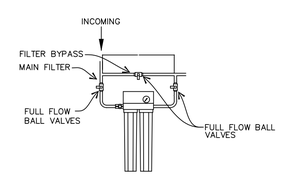

ICE MACHINE WATER FILTERATION DETAIL (TYP.)

SCALE | NOT TO SCALE

FOOD SERVICE DESIGN GROUP
FSDG
1202 MARKET STREET TEL: (619) 239-8156
SAN DIEGO, CA 92101 FAX: (619) 239-2686
www.fsdesigngroup.com
INNOVATIVE FOOD SERVICE DESIGN

FOODSERVICE CONSULTANTS
WEN KO
FSDG
A.I.A. ALLIED MEMBER

REVISIONS

ISSUE DATES
CLIENT
DESIGN DEVELOPMENT
HEALTH DEPARTMENT
PERMIT SET
CONSTRUCTION SET

PROJECT NAME: BURGER LOUNGE

PROJECT LOCATION: 1198 ROSEVILLE PARKWAY, STE 135 ROSEVILLE, CA 95661

DATE: 6-15-2018
SCALE: 1/4" = 1'-0"
PROJECT NUMBER: 191817

SHEET TITLE: FOODSERVICE ABOVE SLAB PLUMBING ROUGH-IN PLAN

SHEET NUMBER
FS-4.1

ALL IDEAS, DESIGNS AND ARRANGEMENTS INDICATED ON THESE DRAWINGS ARE THE PROPERTY OF FOOD SERVICE DESIGN GROUP AND ARE TO BE USED IN CONNECTION WITH THIS SPECIFIC PROJECT AND SHALL NOT BE USED OTHERWISE WITHOUT THE EXPRESSED WRITTEN CONSENT OF FOOD SERVICE DESIGN GROUP. THERE SHALL BE NO CHANGES OR DEVIATION FROM THE DRAWINGS OR ACCOMPANYING SPECIFICATION WITHOUT THE EXPRESSED CONSENT OF FOOD SERVICE DESIGN GROUP

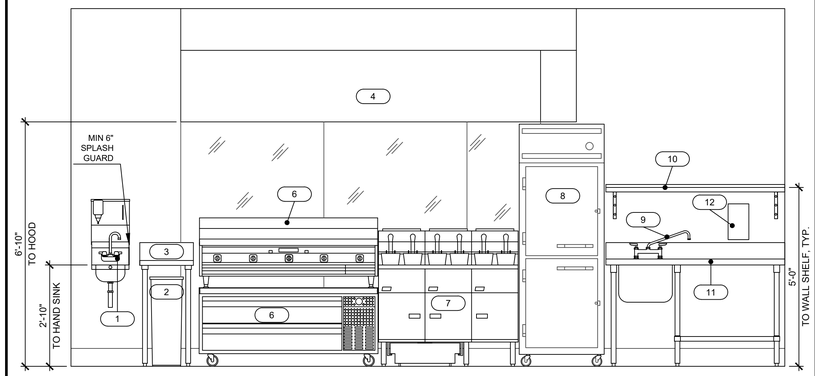

1 MAIN COOK LINE
SCALE | 1/2" = 1'-0"

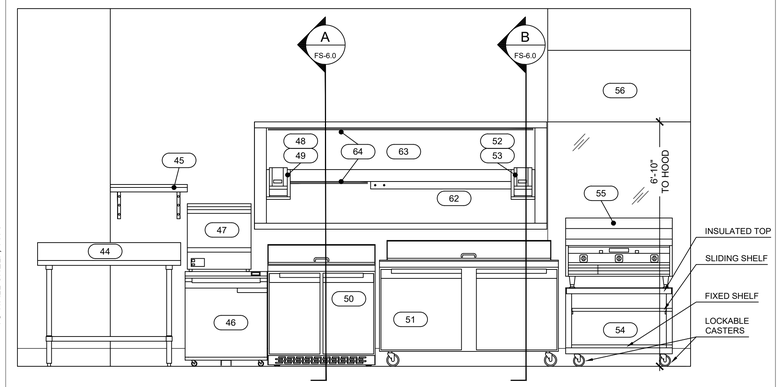

2 CHEF LINE
SCALE | 1/2" = 1'-0"

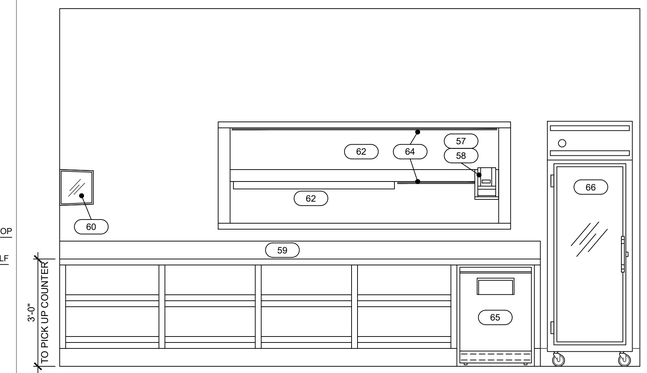

3 EMPLOYEE PICK UP COUNTER
SCALE | 1/2" = 1'-0"

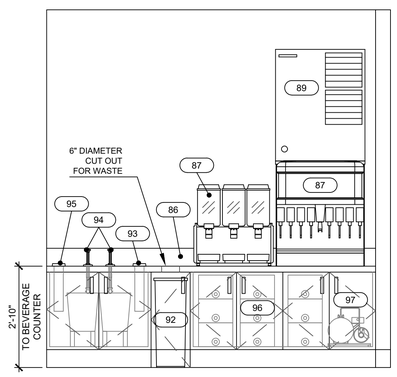

4 SELF SERVICE BEV. COUNTER
SCALE | 1/2" = 1'-0"

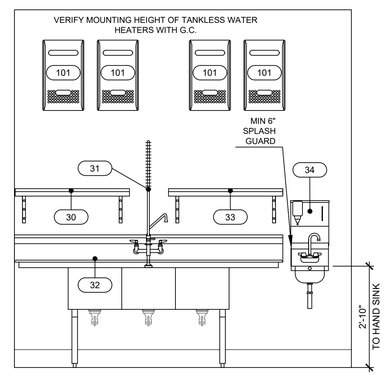

5 3 COMPARTMENT SINK
SCALE | 1/2" = 1'-0"

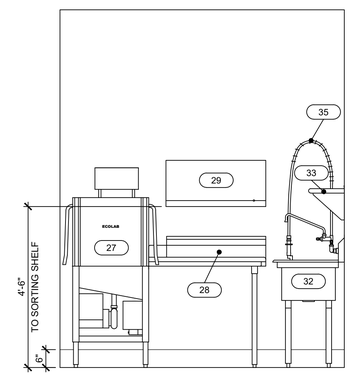

6 DISHWASHER
SCALE | 1/2" = 1'-0"

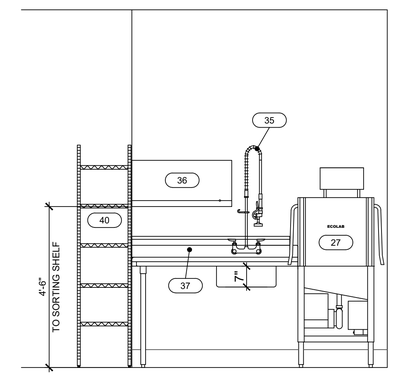

7 DISHWASHER
SCALE | 1/2" = 1'-0"

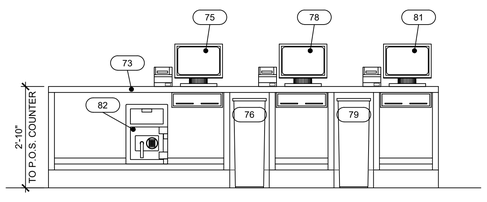

8 P.O.S. COUNTER
SCALE | 1/2" = 1'-0"

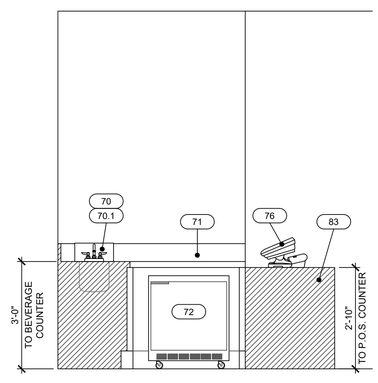

9 BEVERAGE COUNTER
SCALE | 1/2" = 1'-0"

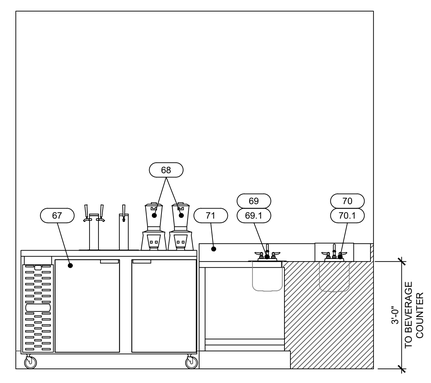

10 BEVERAGE COUNTER
SCALE | 1/2" = 1'-0"

1202 MARKET STREET TEL: (619) 239-8156
SAN DIEGO, CA 92101 FAX: (619) 239-2686
www.fsdesigngroup.com
FOOD SERVICE DESIGN GROUP
INNOVATIVE FOOD SERVICE DESIGN

FOODSERVICE CONSULTANTS
WEN KO
A.I.A. ALLIED MEMBER, IFDA

REVISIONS

1	X
2	X
3	X
4	X
5	X

ISSUE DATES

CLIENT	
DESIGN DEVELOPMENT	
HEALTH DEPARTMENT	
PERMIT SET	
CONSTRUCTION SET	

PROJECT NAME: BURGER LOUNGE

PROJECT LOCATION: 1198 ROSEVILLE PARKWAY, STE 135 ROSEVILLE, CA 95661

DATE:	6-15-2018
SCALE:	1/2" = 1'-0"
PROJECT NUMBER:	191817

SHEET TITLE: FOODSERVICE EQUIPMENT ELEVATIONS

SHEET NUMBER

FS-5.0

ALL IDEAS, DESIGNS AND ARRANGEMENTS INDICATED ON THESE DRAWINGS ARE THE PROPERTY OF FOOD SERVICE DESIGN GROUP AND ARE TO BE USED IN CONNECTION WITH THIS SPECIFIC PROJECT AND SHALL NOT BE USED OTHERWISE WITHOUT THE EXPRESSED WRITTEN CONSENT OF FOOD SERVICE DESIGN GROUP. THERE SHALL BE NO CHANGES OR DEVIATION FROM THE DRAWINGS OR ACCOMPANYING SPECIFICATION WITHOUT THE EXPRESSED CONSENT OF FOOD SERVICE DESIGN GROUP

SECTIONS SHOWN ARE DIAGRAMMATICAL ONLY AND ARE NOT TO BE INTERPRETED AS ACTUAL FABRICATION SHOP DRAWINGS. MILLWORK AND STAINLESS STEEL FABRICATORS TO VERIFY FIELD CONDITIONS PRIOR TO CONSTRUCTION.

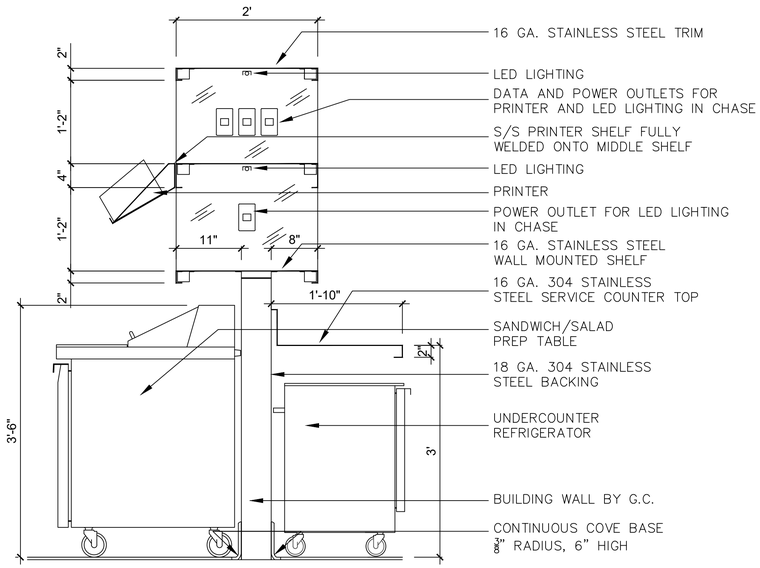

NOTE:
VERIFY DESIGN, MATERIAL AND HARDWARE W/ARCHITECT

A **DOUBLE OVERSHELF**
SCALE | 1" = 1'-0"

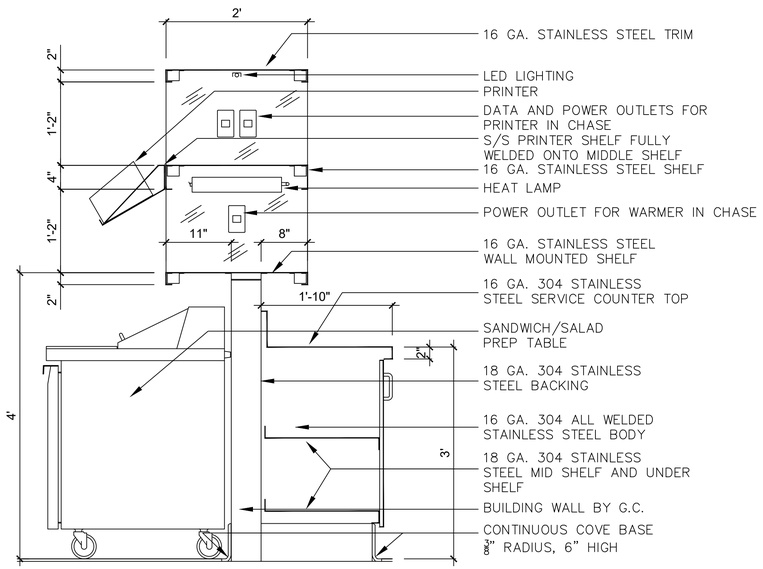

NOTE:
VERIFY DESIGN, MATERIAL AND HARDWARE W/ARCHITECT

B **DOUBLE OVERSHELF**
SCALE | 1" = 1'-0"

FOOD SERVICE DESIGN GROUP
FSDG
1202 MARKET STREET TEL: (619) 239-8156
SAN DIEGO, CA 92101 FAX: (619) 239-3686
www.fsdesigngroup.com
INNOVATIVE FOOD SERVICE DESIGN

FOODSERVICE CONSULTANT
WEN KO
FSDG
A.I.A. ALLIED MEMBER

REVISIONS

ISSUE DATES
CLIENT
DESIGN DEVELOPMENT
HEALTH DEPARTMENT
PERMIT SET
CONSTRUCTION SET

PROJECT NAME:
BURGER LOUNGE

PROJECT LOCATION:
1198 ROSEVILLE PARKWAY, STE 135
ROSEVILLE, CA 95661

DATE: 6-15-2018
SCALE: 1" = 1'-0"

PROJECT NUMBER: 191817

SHEET TITLE:
FOODSERVICE EQUIPMENT SECTIONS

SHEET NUMBER
FS-6.0

ALL IDEAS, DESIGNS AND ARRANGEMENTS INDICATED ON THESE DRAWINGS ARE THE PROPERTY OF FOOD SERVICE DESIGN GROUP AND ARE TO BE USED IN CONNECTION WITH THIS SPECIFIC PROJECT AND SHALL NOT BE USED OTHERWISE WITHOUT THE EXPRESSED WRITTEN CONSENT OF FOOD SERVICE DESIGN GROUP. THERE SHALL BE NO CHANGES OR DEVIATION FROM THE DRAWINGS OR ACCOMPANYING SPECIFICATION WITHOUT THE EXPRESSED CONSENT OF FOOD SERVICE DESIGN GROUP

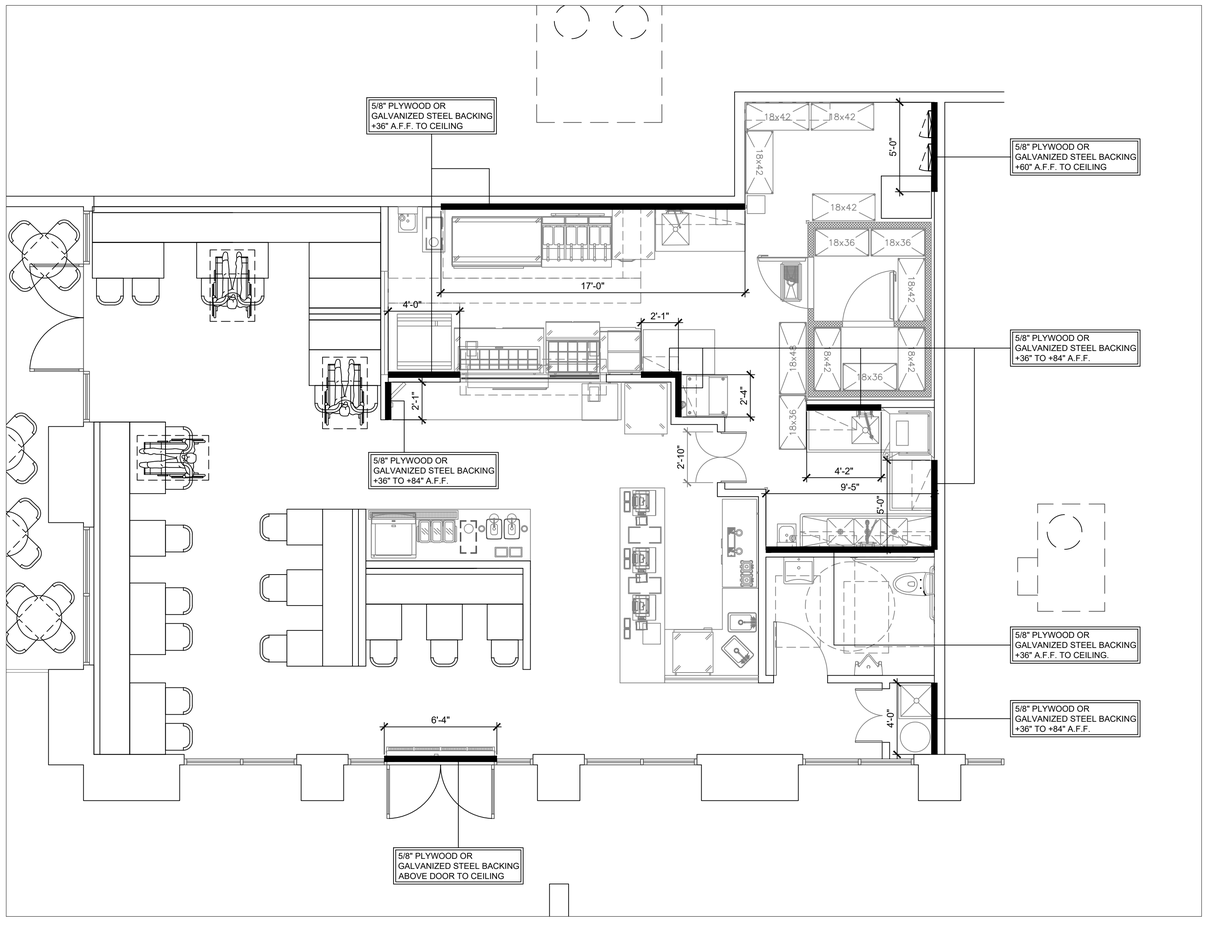

GENERAL NOTES

A. ALL WALL BACKING SHOWN ON THIS SHEET IS RECOMMENDED FOR FOOD SERVICE EQUIPMENT SUPPLIED BY KITCHEN EQUIPMENT SUPPLIER. GENERAL CONTRACTOR TO COORDINATE AND REFER TO ARCHITECTURAL SHEETS FOR ALL OTHER WALL BACKING NEEDS PRIOR TO INSTALLATION.

B. PLYWOOD OR GALVANIZED STEEL BACKING SHALL BE USED IN LIEU OF DRYWALL WHERE INDICATED ON PLANS

C. ANY WALL BACKING REMOVED BY PLUMBER, ELECTRICIAN OR ANY OTHER TRADE TO COMPLETE THEIR INSTALLATION MUST BE REPLACED BY THAT TRADE. IF WALL BACKING CAN NOT BE REPLACED THE GENERAL CONTRACTOR, FOOD SERVICE EQUIPMENT SUPPLIER & OWNER MUST BE NOTIFIED.

D. INTERIOR WALL AND CEILING FINISH MATERIALS SHALL COMPLY WITH CBC SECTION 803
CLASS A = FLAME SPREAD INDEX 0-25; SMOKE-DEVELOPED INDEX 0-450.
CLASS B = FLAME SPREAD INDEX 25-75; SMOKE-DEVELOPED INDEX 0-450.
CLASS C = FLAME SPREAD INDEX 76-200; SMOKE-DEVELOPED INDEX 0-450.

E. INTERIOR FLOOR FINISH AND FLOOR COVERING MATERIALS SHALL COMPLY WITH SECTION 804.
MATERIAL, OTHER THAN FOAM PLASTIC, USED AS INTERIOR TRIM IN NEW AND EXISTING BUILDINGS SHALL HAVE A MINIMUM CLASS C FLAME SPREAD AND SMOKE DEVELOPED INDICES WHEN TESTED IN ACCORDANCE WITH ASTM E84 OR UL723

WALL BACKING LEGEND	
	WALL BACKING
+12"	A.F.F. - ABOVE FINISHED FLOOR
G.C.	GENERAL CONTRACTOR

FOOD SERVICE DESIGN GROUP
FSDG
1202 MARKET STREET TEL: (619) 239-8156
SAN DIEGO, CA 92101 FAX: (619) 239-2686
www.fsdesigngroup.com
INNOVATIVE FOOD SERVICE DESIGN.

FOODSERVICE CONSULTANTS
WEN KO
FSDG
A.I.A. ALLIED MEMBER, IN

REVISIONS

ISSUE DATES
CLIENT
DESIGN DEVELOPMENT
HEALTH DEPARTMENT
PERMIT SET
CONSTRUCTION SET

PROJECT NAME:
BURGER LOUNGE

PROJECT LOCATION:
1198 ROSEVILLE PARKWAY, STE 135
ROSEVILLE, CA 95661

DATE: 6-15-2018
SCALE: 1/4" = 1'-0"
PROJECT NUMBER: 191817

SHEET TITLE:
FOODSERVICE WALL BACKING PLAN

SHEET NUMBER
FS-B

ALL IDEAS, DESIGNS AND ARRANGEMENTS INDICATED ON THESE DRAWINGS ARE THE PROPERTY OF FOOD SERVICE DESIGN GROUP AND ARE TO BE USED IN CONNECTION WITH THIS SPECIFIC PROJECT AND SHALL NOT BE USED OTHERWISE WITHOUT THE EXPRESSED WRITTEN CONSENT OF FOOD SERVICE DESIGN GROUP. THERE SHALL BE NO CHANGES OR DEVIATION FROM THE DRAWINGS OR ACCOMPANYING SPECIFICATION WITHOUT THE EXPRESSED CONSENT OF FOOD SERVICE DESIGN GROUP

WALK - IN SPECIFICATIONS

combo
OVERALL SIZE: 6'-11" X 9'-9" X 8'-6 1/4"

PANELS
FOAMED IN PLACE URETHANE FOAM 4"

EXTERIOR FINISH
WALL: GALVALUME - EMBOSSED 26 GA
TOP: GALVALUME - EMBOSSED 26 GA

INTERIOR FINISH
WALL: GALVALUME - EMBOSSED 26 GA
TOP: GALVALUME - EMBOSSED 26 GA

FLOOR TYPE
F01 FREEZER : SCREED, METAL 4" HIGH
C01 COOLER : SCREED, METAL 4" HIGH

WALK-IN ACCESSORIES
(5) TIE DOWN ANGLE - 1-1/2" X 1-1/2" X 96" (INT WALL TO CL INCL PARTITIONS)
(90) TAPCON FASTENERS
(1) PC198LZOP-2E, 208-230/60/1, 2HP, PRE-CHARGED, AIR-COOLED, SCROLL, LOW TEMP STANDARD COMPRESSOR UNIT
(1) ASLE25-S8-2EC-PR-9, 208/230-60-1, R448A, LOW TEMP, ELECTRIC DEFROST, REACH-IN UNIT COOLER
(1) 2 HP 2 - 5 YR EXTENDED COMPRESSOR WARRANTY
(42) COVE BASE, GALVALUME EMBOSSED 26 GA 1.25 X 4.25

REFRIGERATION
KPC48MOP-2E VOLTS: 208-230-60-1,BTU:5540
KAM16-052-1EC-PR-8 VOLTS: 115-60-1,BTU:6079
TEMP: WALK-IN 35,AMBIENT TEMP: 90

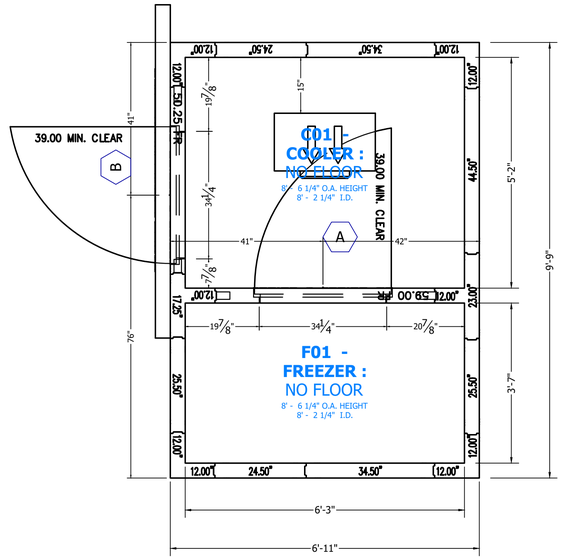

WALLS LAYOUT

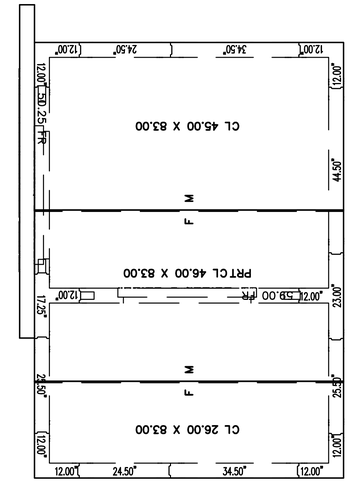

TOPS LAYOUT

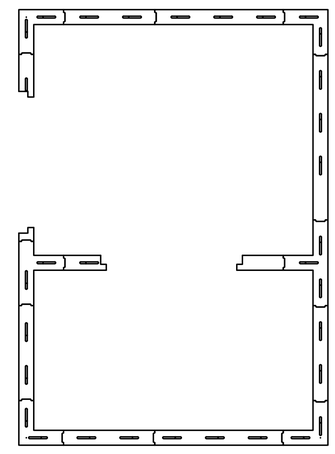

FLOORS LAYOUT

⚠ATTENTION

1. **DRAWING NOT INTENDED FOR INSTALLATION** - DESIGN APPLICATION ONLY.
2. ALL WALK-INS ARE DESIGNED FOR INDOOR APPLICATION UNLESS NOTED OTHERWISE
3. PENETRATIONS AND SEALING OF ARE THE RESPONSIBILITY OF OTHERS
4. ALLOW 2" MINIMUM CLEARANCE WITH AIRFLOW OF 5 CFM PER 100 SQ FT AROUND ENTIRE PANEL SURFACES. INDOOR WALK-INS REQUIRE A 75°F AMBIENT AND 55% RELATIVE HUMIDITY OR LESS AROUND THE EXTERIOR OF THE WALK-IN.
5. GENERAL CONTRACTOR TO REFER TO DESIGN AND SPECIFICATION MANUAL FOR FLOOR DETAIL INFORMATION
6. QUARRY TILE OR CONCRETE FLOOR APPLICATIONS: METAL PANEL FACING MAY BE SUSCEPTIBLE TO STAINING DUE TO EXCESSIVE MOISTURE CREATED BY THE HYDRATION OF CONCRETE TYPE MATERIALS. IT IS ABSOLUTELY NECESSARY THAT EACH ROOM BE PROPERLY VENTILATED. SPECIAL PRECAUTIONS MUST ALSO BE TAKEN WHEN USING MURIATIC ACID DUE TO EFFECTS HYDROCHLORIC FUMES HAVE ON METAL MATERIALS
7. PANEL LAYOUT MAY CHANGE BASED ON OPTIMAL MANUFACTURING STANDARDS
8. WALK-IN TOP IS NOT DESIGNED FOR FOOT TRAFFIC OR STORAGE UNLESS NOTED OTHERWISE
9. IF CONDENSING UNIT IS LOCATED IN THE INTERIOR OF BUILDING A MINIMUM OF 24" OF CLEARANCE IS REQUIRED AROUND TOP AND SIDES
10. FLOOR, CURB, AND PIT DETAILS ARE FOR GENERAL REFERENCE ONLY. THESE DRAWINGS SHOULD NOT BE USED OR INCORPORATED IN THE DESIGN OR PREPARATION OF THE INSULATED FLOOR, SUB-SLAB OR CURBS, WITHOUT HAVING THE DESIGN REVIEWED BY A QUALIFIED ENGINEER. ALL FOOTINGS, FOUNDATION WALLS AND CONCRETE WEAR SLABS ARE THE RESPONSIBILITY OF THE BUILDING ENGINEER OR ARCHITECT.
11. THE FOAM PLASTIC USED IN THIS PRODUCT COMPLIES TO THE IBC SECTION 2603 AS FOLLOWS: FLAME SPREAD RATING: 20; SMOKE DEVELOPED RATING: 450; FLASH IGNITION TEMPERATURE RATING: 915°F; SPONTANEOUS IGNITION TEMPERATURE RATING: 950°F.

FOR APPROVAL
YOU MUST REVIEW ALL NOTES, DETAILS, DIMENSIONS, FINISHES, DOORS SIZES, LOCATIONS AND SWINGS

☐ **APPROVAL**- NO CHANGE REQUIRED, MANUFACTURE AS DRAWN.

☐ **APPROVED AS NOTED**- MAKE REQUIRED CHANGES AND MANUFACTURE AS DRAWN.

☐ **NOT APPROVED**- DESIGN CHANGES REQUIRE DRAWING REVISION AND RESUBMISSION.

DATE:_____ BY:_____

SMOOTH FINISH DISCLAIMER

Panels with non-textured and/or no-profile panel finishes (smooth finishes) on the exterior and interior faces may exhibit "oil canning" and flatness imperfections on the surface. Our standard panels have a stucco embossed texture on both faces that helps to reduce oil canning and any other irregularities in the exposed surface. Please be aware of this potential situation in your specification process. Such "oil canning" and flatness issues are typical and are not covered under standard warranties.

SPACE DESIGNATED FOR ENGINEERS SEAL

DRAWING #: A122314R1
UNIT #: 001
ORDER #:

KOLPAK
A Welbilt Brand

BURGER LOUNGE-CAMPBELL
CAMPBELL,CA 95008 USA

PREFERRED MARKETTING GROUP

DRAWN BY:	DATE:	CHECK BY:	DATE:	QUOTE REVISION	DATE:

SHEET #
AD-1 of 2

1202 MARKET STREET TEL: (619) 239-8156
SAN DIEGO, CA 92101 FAX: (619) 239-2686
www.fsdesigngroup.com
FOOD SERVICE DESIGN GROUP
INNOVATIVE FOOD SERVICE DESIGN

REVISIONS
1 X
2 X
3 X
4 X
5 X

ISSUE DATES
CLIENT
DESIGN DEVELOPMENT
HEALTH DEPARTMENT
PERMIT SET
CONSTRUCTION SET

PROJECT NAME: BURGER LOUNGE
PROJECT LOCATION: 1198 ROSEVILLE PARKWAY, STE 135 ROSEVILLE, CA 95661

DATE: 6-15-2018
SCALE: NOT TO SCALE
PROJECT NUMBER: 191817

SHEET TITLE: WALK-IN DRAWING & SPECIFICATIONS

SHEET NUMBER
FS-W1

ALL IDEAS, DESIGNS AND ARRANGEMENTS INDICATED ON THESE DRAWINGS ARE THE PROPERTY OF FOOD SERVICE DESIGN GROUP AND ARE TO BE USED IN CONNECTION WITH THIS SPECIFIC PROJECT AND SHALL NOT BE USED OTHERWISE WITHOUT THE EXPRESSED WRITTEN CONSENT OF FOOD SERVICE DESIGN GROUP. THERE SHALL BE NO CHANGES OR DEVIATION FROM THE DRAWINGS OR ACCOMPANYING SPECIFICATION WITHOUT THE EXPRESSED CONSENT OF FOOD SERVICE DESIGN GROUP

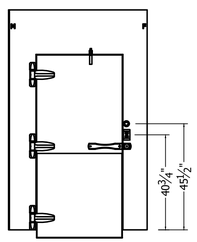

FRAME:
RECESSED 0" WITH 0" LEVELING SAND AND 0" TILE AND GROUT
EXT: GALVALUME - EMBOSSED 26 GA
INT: GALVALUME - EMBOSSED 26 GA

PLUG:
EXT: GALVALUME - EMBOSSED 26 GA
EXT: KICKPLATE, ALUM .063 DIAMOND TREAD 36" HIGH
INT: GALVALUME - EMBOSSED 26 GA
INT: KICKPLATE, ALUM .063 DIAMOND TREAD 36" HIGH

HARDWARE AND ACCESSORIES:
(1) SWITCH - PILOT LIGHT INCLUDED UL (STD)
(1) THERMOMETER - 2 INCH DIAL W/6' LEAD (STD)
(1) LIGHT FIXTURE - KASON 1803 LED W/BULB, GLOBE AND NIGHTLIGHT 120V (STD)
(3) HINGE - KASON 1345 ADJUSTABLE / SPRING ASSISTED (STD)
(1) HANDLE - KASON 28 WITH LOCKING ASSEMBLY (STD)
(1) DOOR CLOSER - KASON 1098 W/COVER AND HOOK (STD)

OFFSET 0.50
DR 34.00" x 78.00"
FR 59.00" x 94.25"

DW-1

A

DOOR ELECTRICAL INFORMATION				
DESCRIPTION	QTY	VOLT	AMP	AMP LOAD
VAPOR PROOF LIGHT	0	115	1	0
FLUORESCENT LIGHT	0	115	1.7	0
LED LIGHT	0	115	0.4	0
HEATER WIRE	0	115	0.9	0
DIGITAL THERMOMETER	0	115	0.1	0
HEATED AIR VENT	0	115	0.1	0
HEATED VIEWPORT	0	115	0.9	0
AIR SHIELD	0	115	1.4	0
IN/OUT BUZZER	0	115	0.1	0
MODULARM 75/75B OR DATALARM	0	115	6	0
OTHER ALARMS	0	115	1	0
115 VOLT, SINGLE PHASE, 60 Hz, TOTAL DOOR AMPS:				0

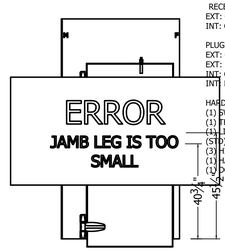

FRAME:
RECESSED 0" WITH 0" LEVELING SAND AND 0" TILE AND GROUT
EXT: GALVALUME - EMBOSSED 26 GA
INT: GALVALUME - EMBOSSED 26 GA

PLUG:
EXT: GALVALUME - EMBOSSED 26 GA
EXT: KICKPLATE, ALUM .063 DIAMOND TREAD 36" HIGH
INT: GALVALUME - EMBOSSED 26 GA
INT: KICKPLATE, ALUM .063 DIAMOND TREAD 36" HIGH

HARDWARE AND ACCESSORIES:
(1) SWITCH - PILOT LIGHT INCLUDED UL (STD)
(1) THERMOMETER - 2 INCH DIAL W/6' LEAD (STD)
(1) LIGHT FIXTURE - KASON 1803 LED W/BULB, GLOBE AND NIGHTLIGHT 120V (STD)
(3) HINGE - KASON 1345 ADJUSTABLE / SPRING ASSISTED (STD)
(1) HANDLE - KASON 28 WITH LOCKING ASSEMBLY (STD)
(1) DOOR CLOSER - KASON 1098 W/COVER AND HOOK (STD)

OFFSET 3.88
DR 34.00" x 78.00"
FR 50.25" x 94.25"

DW-2

B

DOOR ELECTRICAL INFORMATION				
DESCRIPTION	QTY	VOLT	AMP	AMP LOAD
VAPOR PROOF LIGHT	0	115	1	0
FLUORESCENT LIGHT	0	115	1.7	0
LED LIGHT	0	115	0.4	0
HEATER WIRE	1	115	0.5	0.5
DIGITAL THERMOMETER	0	115	0.1	0
HEATED AIR VENT	1	115	0.04	0.04
HEATED VIEWPORT	0	115	0.9	0
AIR SHIELD	0	115	1.4	0
IN/OUT BUZZER	0	115	0.1	0
MODULARM 75/75B OR DATALARM	0	115	6	0
OTHER ALARMS	0	115	1	0
115 VOLT, SINGLE PHASE, 60 Hz, TOTAL DOOR AMPS:				0.54

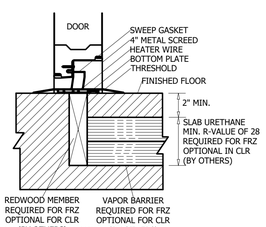

1 DETAIL (24 GA) HTR WIRE
Scale: NTS

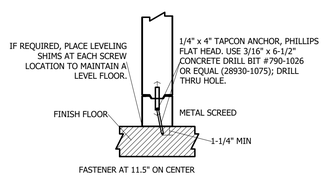

2 DETAIL - TAPCON ANCHOR
Scale: NTS

3 DETAIL - 4 MSCD
Scale: NTS

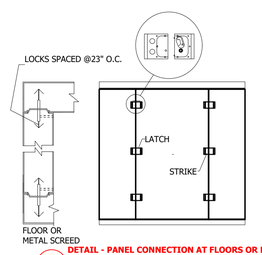

4 DETAIL - PANEL CONNECTION AT FLOORS OR METAL SCREEDS
Scale: NTS

AT EVERY ENTRANCE CONDUIT, FORCE SEALANT AROUND THE EXTERIOR OF THE ELECTRICAL CONDUIT AND INSIDE THE CONDUIT AROUND THE WIRES. FAILURE TO ELIMINATE AIRFLOW IN THE CONDUIT WILL ALLOW MOISTURE TO DAMAGE ELECTRICAL COMPONENTS ESPECIALLY LIGHTS WHICH **WILL NOT BE COVERED UNDER WARRANTY.**

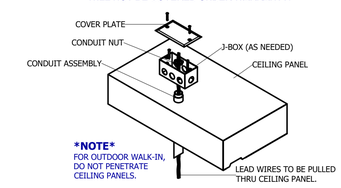

NOTE
FOR OUTDOOR WALK-IN, DO NOT PENETRATE CEILING PANELS.

5 DETAIL - ELECTRICAL CONDUIT PENETRATION
Scale: NTS

COMPARTMENT		CONDENSING UNIT																				
	TEMP F				DIMENSIONS				COMPRESSOR						CONDENSER FAN MTR			TOTAL AMPS	MX AMP DISC	CONNECTIONS O.D.		RCV CAP
DESCRIPTION	WI	QTY	MODEL#	COMPRESSOR TYPE	L (A)	W (B)	H (C)	LBS	HP	RLA	LRA	V	HZ	Φ	FLA	V	Φ			SUCT	LIQ	@ 90% FULL (lbs)
cooler	35	1	KPC48MOP-2E	Hermetic	28.25	27.875	18.75	152	1/2	4.6	26.5	208-230	60	1	0.5	208-230	1	5.3	15	5/8	3/8	6.1

COMPARTMENT		UNIT COOLER													
	TEMP F			DIMENSIONS				FAN		HEATER			CONNECTIONS O.D.		
DESCRIPTION	WI	QTY	MODEL # (DEFROST: A-AIR E-ELECTRIC)	L (D)	W (E)	H (F)	LBS	AMP	V	AMP	V	Φ	SUCT	LIQ	DRAIN
cooler	35	1	KAM16-052-1EC-PR-8	27.125	15.5	16.75	44	0.8	115	0	N/A	0	5/8	3/8	3/4

CONDENSING UNIT ASSEMBLY

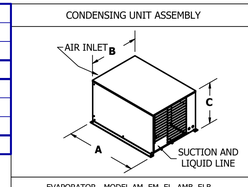

CLEARANCE REQUIREMENT

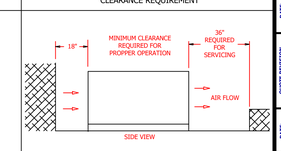

EVAPORATOR - MODEL AM, EM, EL, AMB, ELB

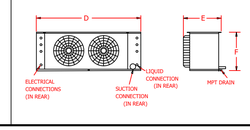

DRAWING #: A122314R1
UNIT #: 001
ORDER #:

KOLPAK
A Welbilt Brand
2012 Tomlinson Avenue Noble, Oklahoma, OK 74068 (512) 854-1255 - (800) 835-0047

BURGER LOUNGE-CAMPBELL
CAMPBELL,CA 95008 USA

PREFERRED MARKETING GROUP

DATE:	QUOTE REVISION	DATE:	CHECK BY:	DATE:	DRAWN BY:

SHEET #
AD-2 of 2

FOOD SERVICE DESIGN GROUP
FSDG
1202 MARKET STREET TEL: (619) 239-8156
SAN DIEGO, CA 92101 FAX: (619) 239-2686
www.fsdesigngroup.com
INNOVATIVE FOOD SERVICE DESIGN.

FOODSERVICE CONSULTANTS
WEN KO
FSDG
A.I.A. ALLIED MEMBER, I.F.C.E.

REVISIONS
1 X
2 X
3 X
4 X
5 X

ISSUE DATES
CLIENT
DESIGN DEVELOPMENT
HEALTH DEPARTMENT
PERMIT SET
CONSTRUCTION SET

PROJECT NAME:
BURGER LOUNGE

PROJECT LOCATION:
1198 ROSEVILLE PARKWAY, STE 135
ROSEVILLE, CA 95661

DATE: 6-15-2018
SCALE: NOT TO SCALE

PROJECT NUMBER: 191817

SHEET TITLE:
WALK-IN DRAWING & SPECIFICATIONS

SHEET NUMBER
FS-W2

ALL IDEAS, DESIGNS AND ARRANGEMENTS INDICATED ON THESE DRAWINGS ARE THE PROPERTY OF FOOD SERVICE DESIGN GROUP AND ARE TO BE USED IN CONNECTION WITH THIS SPECIFIC PROJECT AND SHALL NOT BE USED OTHERWISE WITHOUT THE EXPRESSED WRITTEN CONSENT OF FOOD SERVICE DESIGN GROUP. THERE SHALL BE NO CHANGES OR DEVIATION FROM THE DRAWINGS OR ACCOMPANYING SPECIFICATION WITHOUT THE EXPRESSED CONSENT OF FOOD SERVICE DESIGN GROUP

STATE OF CALIFORNIA
PROCESS COMPLIANCE FORMS AND WORKSHEETS
CEC-NRCC-PRC-01-E (Revised 01/16)
CALIFORNIA ENERGY COMMISSION

CERTIFICATE OF COMPLIANCE	NRCC-PRC-01-E
Process Compliance Forms & Checklists	Page 1 of 3
Project Name: BURGER LOUNGE	Date Prepared: 5/24/18

A. PROCESS COMPLIANCE DOCUMENTS & WORKSHEETS

Check box if worksheet is included.

For detailed instructions on the use of this and all Energy Standards compliance documents, refer to the 2016 Nonresidential Manual.
Note: The Enforcement Agency may require all forms to be incorporated onto the building plans.

YES	NO	Doc/Worksheet #	Title
●	○	PRC-01-E (1 of 2)	Covered Process Certificate of Compliance. Required on plans for all submittals with covered processes.
●	○	PRC-01-E (2 of 2)	Certificate of Compliance, Required Acceptance Tests (PRC-02-A to PRC-08-A). Required on plans for all submittals.
○	●	PRC-02-E	Certificate of Compliance for Enclosed Parking Garage Exhaust Fans
●	○	PRC-03-E	Certificate of Compliance for Commercial Kitchens
○	●	PRC-04-E	Certificate of Compliance for Computer Rooms
○	●	PRC-05-E	Certificate of Compliance for Commercial Refrigeration
○	●	PRC-06-E	Certificate of Compliance for ALL Refrigerated Warehouses
○	●	PRC-07-E	Certificate of Compliance for Refrigerated Warehouse ≥ 3,000 ft2
○	●	PRC-08-E	Certificate of Compliance for Refrigerated Warehouse Where Multiple Spaces that (i) comprise a total of 3,000 ft² or more; and (ii) are collectively served by the same refrigeration system compressor(s) and condenser(s) (central systems).
○	●	PRC-09-E	Certificate of Compliance for Laboratory Exhaust
○	●	PRC-10-E	Certificate of Compliance for Compressed Air Systems
○	●	PRC-11-E	Certificate of Compliance for Process Boilers
○	●	PRC-12-E	Certificate of Compliance for Elevator Lighting and Ventilation Controls
○	●	PRC-13-E	Certificate of Compliance for Escalators and moving Walkways Speed Controls

STATE OF CALIFORNIA
PROCESS COMPLIANCE FORMS AND WORKSHEETS
CEC-NRCC-PRC-01-E (Revised 01/16)
CALIFORNIA ENERGY COMMISSION

CERTIFICATE OF COMPLIANCE	NRCC-PRC-01-E
Process Compliance Forms & Checklists	Page 2 of 3
Project Name: BURGER LOUNGE	Date Prepared: 5/24/18

B. PROCESS ACCEPTANCE DOCUMENTS

Check box for required compliance documents.

Designer:
This compliance document is to be used by the designer and attached to the plans. Listed below are all the acceptance tests for process systems. The designer is required to check the applicable boxes for all acceptance tests that apply and list all equipment that requires an acceptance test. If all equipment of the same type requires a test, list the equipment descriptions and the number of systems.

Installing Contractor:
The contractor who installed the equipment is responsible to either conduct the acceptance test themselves or have a qualified entity run the test for them. If more than one person has responsibility for the acceptance testing, each person shall sign and submit the Certificate of Acceptance applicable to the portion of the construction or installation for which they are responsible.

Enforcement Agency:
Plancheck - The NRCC-PRC-01-E compliance document is not considered a completed document and is not to be accepted by the building department unless the correct boxes are checked.
Inspector - Before occupancy permit is granted all newly installed process systems must be tested to ensure proper operations.

Test Description		PRC-01-A	PRC-02-A	PRC-03-A	PRC-04-A	PRC-05-A	PRC-06-A	PRC-07-A	PRC-08-A	PRC-12-A	PRC-13-A
Equipment Requiring Testing or verification	# of Units	Compressed Air Systems	Garage Exhaust	Kitchen Exhaust	RHW Evap Fan Motor Controls	RHW Evap Condenser Controls	RHW Air-Cooled Condenser Controls	RHW Variable Speed Compressors	RHW Elect. Underslab Heating	Elevator Lighting and Ventilation Controls	Escalators and Moving Walkways Speed Controls
	1	☐	☐	☐	☒	☐	☐	☐	☐	☐	☐

Add Row | Remove Last

STATE OF CALIFORNIA
PROCESS COMPLIANCE FORMS AND WORKSHEETS
CEC-NRCC-PRC-01-E (Revised 01/16)
CALIFORNIA ENERGY COMMISSION

CERTIFICATE OF COMPLIANCE	NRCC-PRC-01-E
Process Compliance Forms & Checklists	Page 3 of 3
Project Name: BURGER LOUNGE	Date Prepared: 5/24/18

DOCUMENTATION AUTHOR'S DECLARATION STATEMENT

1. I certify that this Certificate of Compliance documentation is accurate and complete.

Documentation Author Name:	KATHERINE BAKER	Documentation Author Signature:	
Company:	BAKER ARCHITECTURE	Signature Date:	5/24/18
Address:	4080 CENTRE ST. #203	CEA/HERS Certification Identification (if applicable):	
City/State/Zip:	SAN DIEGO, CA 92103	Phone:	(619) 281-5937

RESPONSIBLE PERSON'S DECLARATION STATEMENT

I certify the following under penalty of perjury, under the laws of the State of California:
1. The information provided on this Certificate of Compliance is true and correct.
2. I am eligible under Division 3 of the Business and Professions Code to accept responsibility for the building design or system design identified on this Certificate of Compliance (responsible designer).
3. The energy features and performance specifications, materials, components, and manufactured devices for the building design or system design identified on this Certificate of Compliance conform to the requirements of Title 24, Part 1 and Part 6 of the California Code of Regulations.
4. The building design features or system design features identified on this Certificate of Compliance are consistent with the information provided on other applicable compliance documents, worksheets, calculations, plans and specifications submitted to the enforcement agency for approval with this building permit application.
5. I will ensure that a completed signed copy of this Certificate of Compliance shall be made available with the building permit(s) issued for the building, and made available to the enforcement agency for all applicable inspections. I understand that a completed signed copy of this Certificate of Compliance is required to be included with the documentation the builder provides to the building owner at occupancy.

Responsible Designer Name:	KATHERINE BAKER	Responsible Designer Signature:	
Company:	BAKER ARCHITECTURE	Date Signed:	5/24/18
Address:	4080 CENTRE ST. #203	License:	C28547
City/State/Zip:	SAN DIEGO, CA 92103	Phone:	(619) 281-5937

STATE OF CALIFORNIA
COMMERCIAL KITCHEN REQUIREMENTS
CEC-NRCC-PRC-03-E (Revised 01/16)
CALIFORNIA ENERGY COMMISSION

CERTIFICATE OF COMPLIANCE	NRCC-PRC-03-E
Commercial Kitchen Requirements	[Page 1 of 2]
Project Name: BURGER LOUNGE	Date Prepared: 5/24/18

KITCHEN ROOM NUMBER:				
TOTAL INSTALLED TYPE I and II KITCHEN HOOD EXHAUST (CFM):	3,125			
TOTAL BYPASS HOOD MUA (CFM):	-			
TOTAL TRANSFER AIR AIRFLOW (CFM):	630			
TOTAL MECHANICALLY HEATED OR COOLED MAKE UP AIR (CFM):	-			
TOTAL AIR NEEDED FOR HEATING OR COOLING (CFM):	3,600			
TOTAL EXHAUST AIR WITH DEMAND VENTILATION SYSTEMS:				
Equipment Tags and System Description	HOOD #1-#2			
PRESCRIPTIVE MEASURES	***T-24 Sections***	***Reference to the Requirements in the Contract Documents***		
Bypass Hood Exhaust and MUA	140.9(b)1A	N/A		
Type I/II Hood Exhaust	140.9(b)1B, Table 140.9-A	SHEET M2.0 AIR BALANCE CALC.		
Mechanically Heated or Cooled Make Up Air	140.9(b)1C and II	N/A		
Replacement Air/Transfer Air Exhaust	140.9(b)1Bi	SHEET M2.0 AIR BALANCE CALC.		
Demand Ventilation Systems	140.9(b)2Bi	N/A		
Energy Recovery Systems	140.9(b)2Bii	N/A		
Tempered/Non Mechanical Cooling Air Systems	140.9(b)2Biv	N/A		

STATE OF CALIFORNIA
COMMERCIAL KITCHEN REQUIREMENTS
CEC-NRCC-PRC-03-E (Revised 01/16)
CALIFORNIA ENERGY COMMISSION

CERTIFICATE OF COMPLIANCE	NRCC-PRC-03-E
Commercial Kitchen Requirements	[Page 2 of 2]
Project Name: BURGER LOUNGE	Date Prepared: 5/24/18

DOCUMENTATION AUTHOR'S DECLARATION STATEMENT

1. I certify that this Certificate of Compliance documentation is accurate and complete.

Documentation Author Name:	KATHERINE BAKER	Documentation Author Signature:	
Company:	BAKER ARCHITECTURE	Signature Date:	5/24/18
Address:	4080 CENTRE ST. #203	CEA/HERS Certification Identification (if applicable):	
City/State/Zip:	SAN DIEGO, CA 92103	Phone:	(619) 281-5937

RESPONSIBLE PERSON'S DECLARATION STATEMENT

I certify the following under penalty of perjury, under the laws of the State of California:
1. The information provided on this Certificate of Compliance is true and correct.
2. I am eligible under Division 3 of the Business and Professions Code to accept responsibility for the building design or system design identified on this Certificate of Compliance (responsible designer).
3. The energy features and performance specifications, materials, components, and manufactured devices for the building design or system design identified on this Certificate of Compliance conform to the requirements of Title 24, Part 1 and Part 6 of the California Code of Regulations.
4. The building design features or system design features identified on this Certificate of Compliance are consistent with the information provided on other applicable compliance documents, worksheets, calculations, plans and specifications submitted to the enforcement agency for approval with this building permit application.
5. I will ensure that a completed signed copy of this Certificate of Compliance shall be made available with the building permit(s) issued for the building, and made available to the enforcement agency for all applicable inspections. I understand that a completed signed copy of this Certificate of Compliance is required to be included with the documentation the builder provides to the building owner at occupancy.

Responsible Designer Name:	KATHERINE BAKER	Responsible Designer Signature:	
Company:	BAKER ARCHITECTURE	Date Signed:	5/24/18
Address:	4080 CENTRE ST. #203	License:	C28547
City/State/Zip:	SAN DIEGO, CA 92103	Phone:	(619) 281-5937

THESE DRAWINGS AND SPECIFICATIONS ARE CONFIDENTIAL AND SHALL REMAIN THE SOLE PROPERTY OF BAKER ARCHITECTURE, WHICH IS THE OWNER OF COPYRIGHT IN THIS WORK. THEY SHALL NOT BE REPRODUCED IN WHOLE OR IN PART, SHARED WITH THIRD PARTIES OR USED IN ANY MANNER ON OTHER PROJECTS OR EXTENSIONS TO THIS PROJECT WITHOUT THE PRIOR WRITTEN CONSENT OF BAKER ARCHITECTURE.

LICENSED ARCHITECT KATHERINE BIANCA BAKER No. C28547 REN. 6-19 STATE OF CALIFORNIA

BAKER [b a] architecture
4080 CENTRE ST, STE #203
SAN DIEGO, CA 92103 TEL:
(619) 281-5937
www.bakerarchitecture.com

REVISION SCHEDULE

REV	DATE	BY	DESCRIPTION
1	05.29.18	--	BLDG. DEPT. PLAN CHECK
2	07.19.18	RjR	ADDENDUM A - DIMENSIONAL CORRECTION
3			
4			
5			

PROJECT # 17XXX

BURGER LOUNGE III LLC
FOUNTAINS AT ROSEVILLE
1198 ROSEVILLE PKWY. #135 - ROSEVILLE, CA 95678

DATE: 04/06/18

CITY STAMP

M5.0