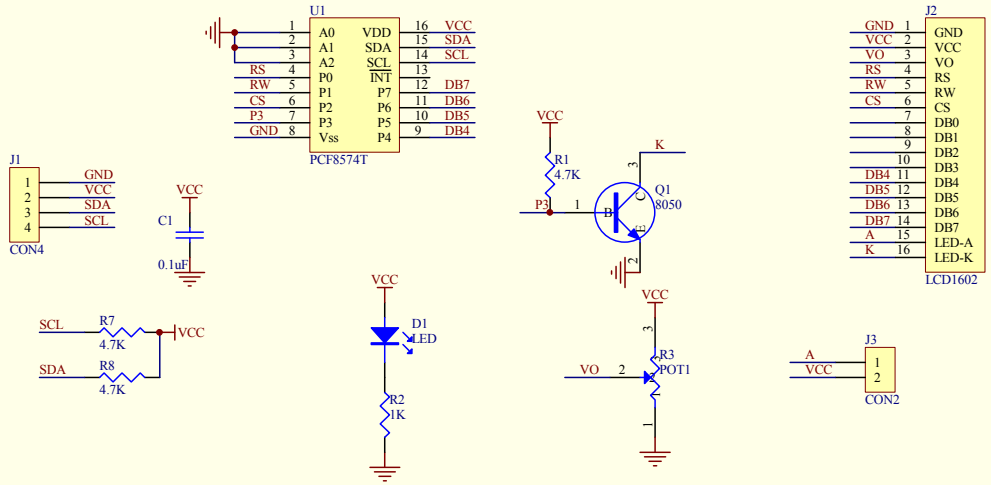

Title		
Size A4	Number	Revision
Date: 7-Mar-2013	Sheet of	
File: D:\原理图\12CLCD1602\12CLCD1602\12CLCD1602.ddb	Drawn By:	