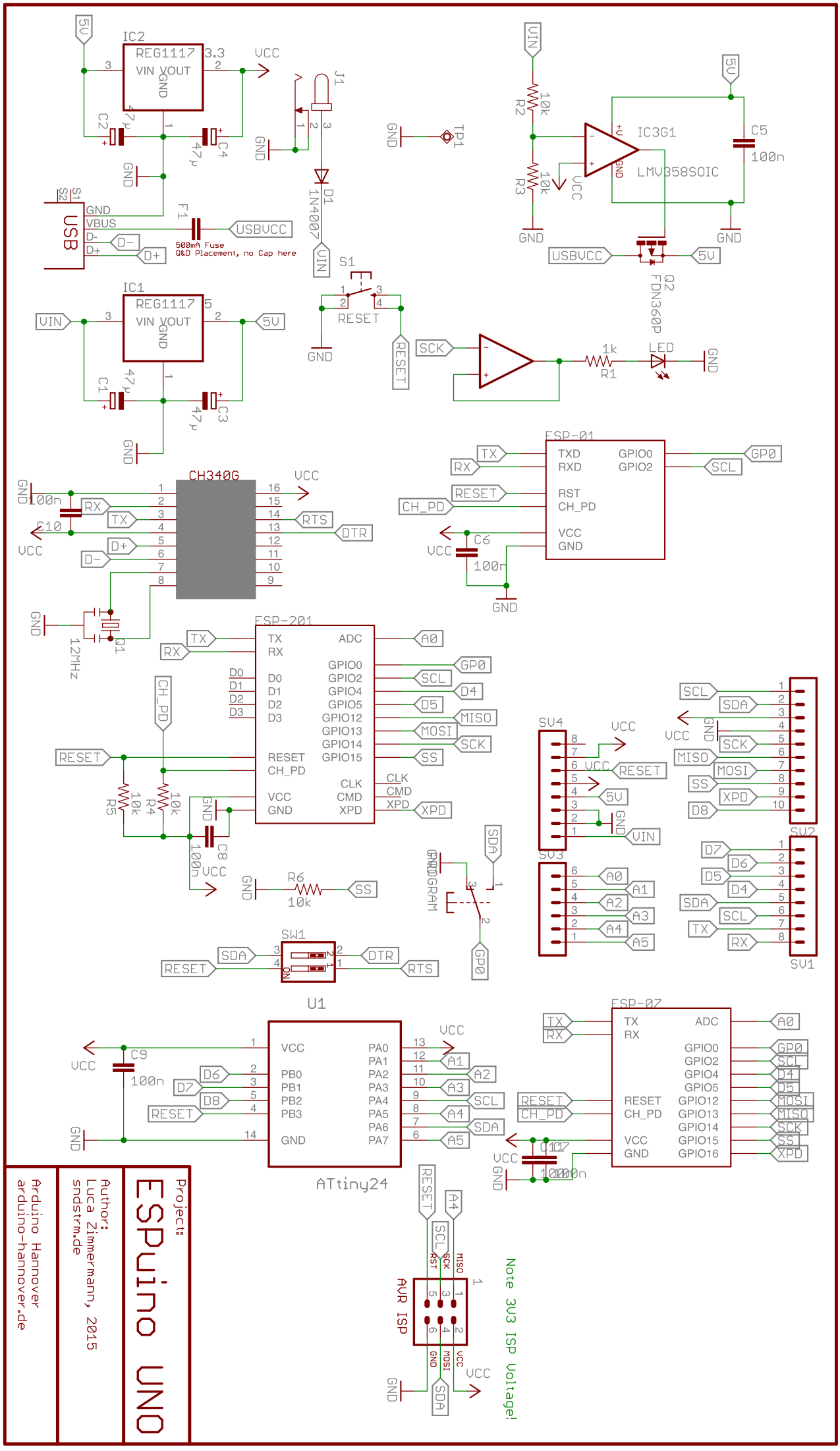
IC2
REG1117
VIN VOUT
GND
3.3
VCC
C2
47µ
C4
47µ
GND
USB
GND
VBUS
D-
D+
F1
USBVCC
500mA Fuse
Q&D Placement, no Cap here
J1
D1
1N4007
VIN
TP1
IC3G1
LMV358SOIC
R2
10k
R3
10k
C5
100n
USBVCC
Q2
FDN360P
IC1
REG1117
VIN
5V
C1
47µ
C3
47µ
S1
RESET
SCK
1k
R1
LED
CH340G
RX
TX
D+
D-
RTS
DTR
C10
100n
Q1
12MHz
ESP-01
TXD
RXD
GPIO0
GPIO2
RST
CH_PD
VCC
GND
GP0
SCL
C6
100n
ESP-201
ADC
A0
GPIO0
GPIO2
GPIO4
GPIO5
GPIO12
GPIO13
GPIO14
GPIO15
D4
D5
MISO
MOSI
SS
CLK
CMD
XPD
D0
D1
D2
D3
R5
10k
R4
10k
C8
100n
R6
10k
SW1
ON
SDA
SV4
SV3
SV2
SV1
D6
D7
D8
U1
ATtiny24
PA0
PA1
PA2
PA3
PA4
PA5
PA6
PA7
PB0
PB1
PB2
PB3
C9
100n
ESP-07
GPIO16
C10
100n
AVR ISP
MISO
MOSI
RST
Note 3V3 ISP Voltage!
Project:
ESPuino UNO
Author:
Luca Zimmermann, 2015
sndstrm.de
Arduino Hannover
arduino-hannover.de