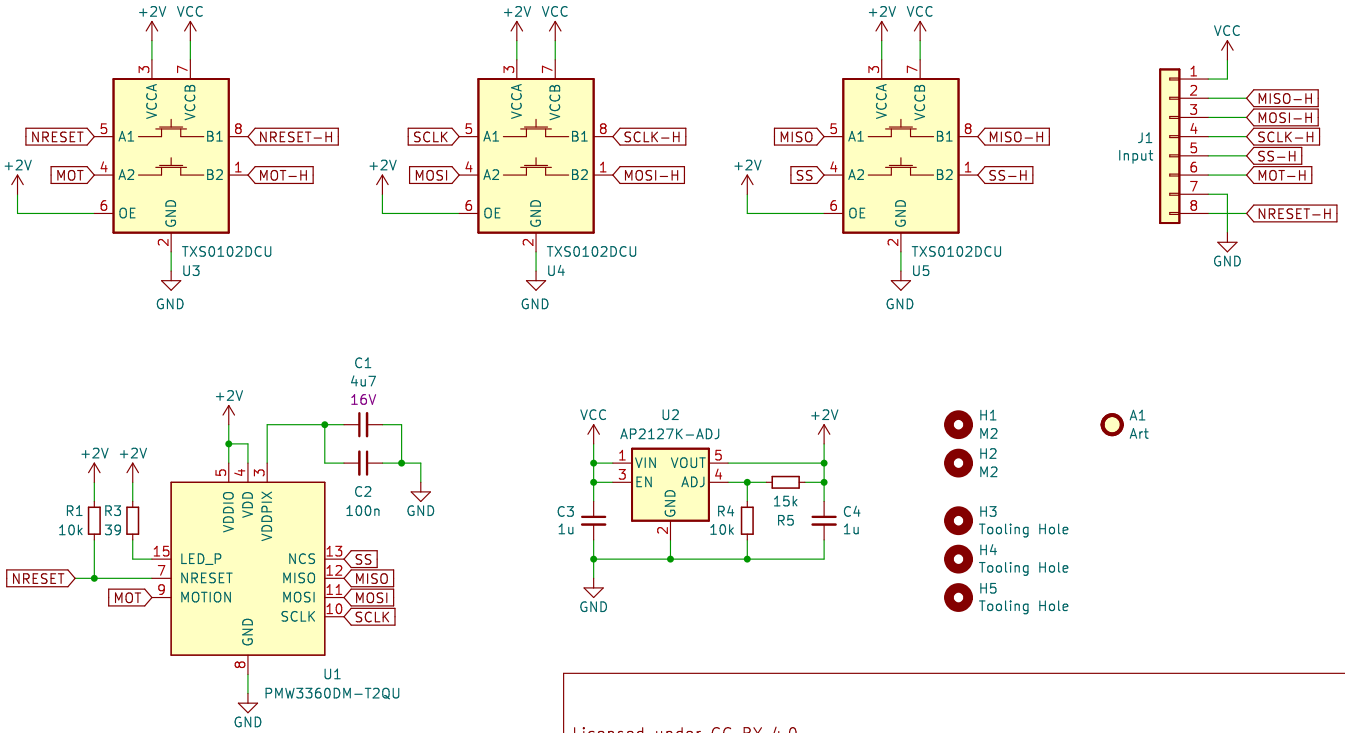

Licensed under CC BY 4.0.

All capacitors 50V unless otherwise specified.

Created by Ariamelon (https://github.com/Ariamelon/Ogen/tree/V1.3)

Sheet: /

File: Ogen.kicad_sch

Title: Ogen PMW3360 Module

Size: A5	Date: 2023-08-04	**Rev: V1.3**
KiCad E.D.A. kicad 7.0.6		Id: 1/1