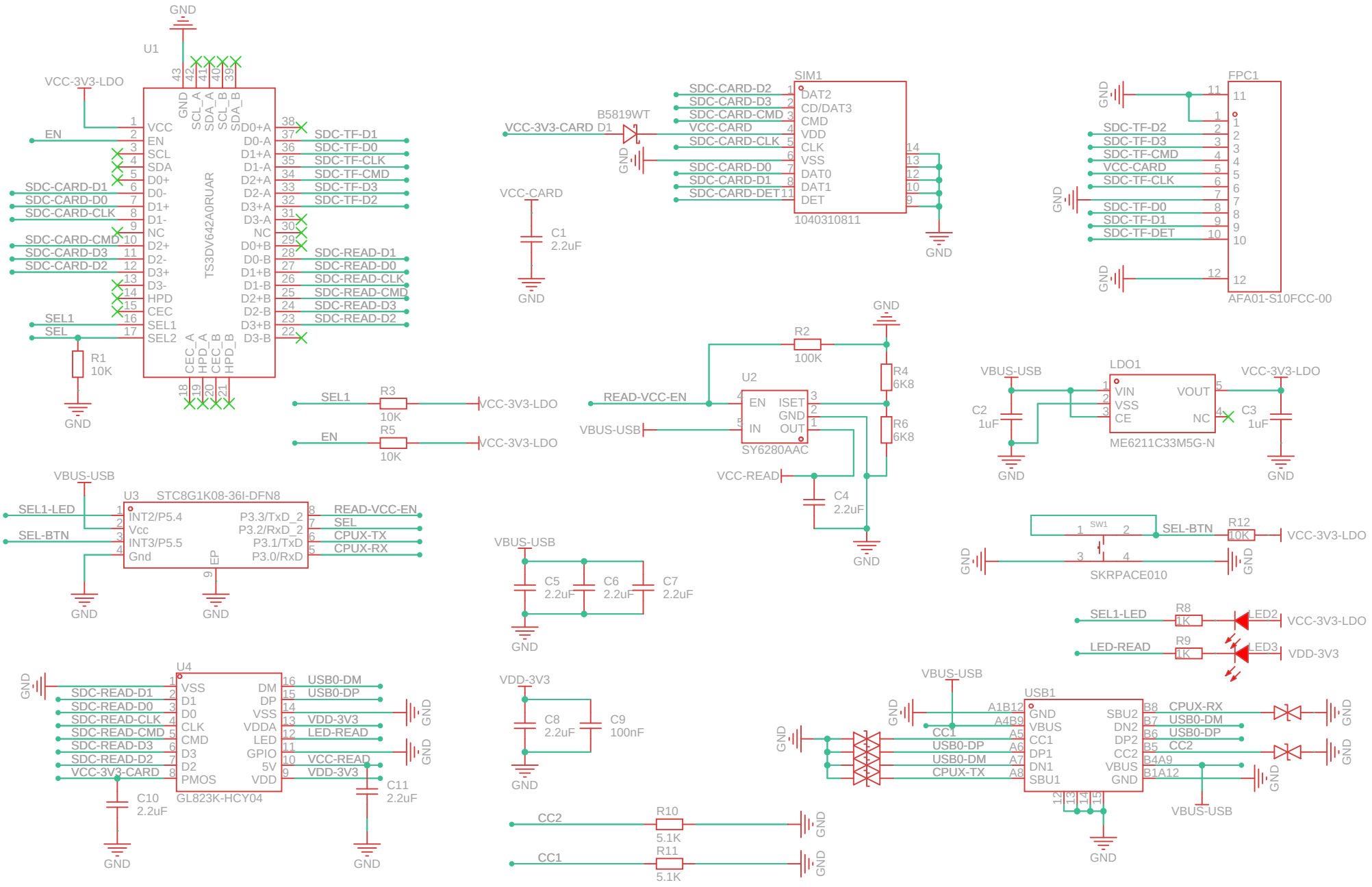

TITLE: AvaotaHyperCard		REV: 1.0
Company: YuzukiHD	Sheet: 1	Total: 1
Date: 2024-07-05	Drawn By: GloomyGhost	