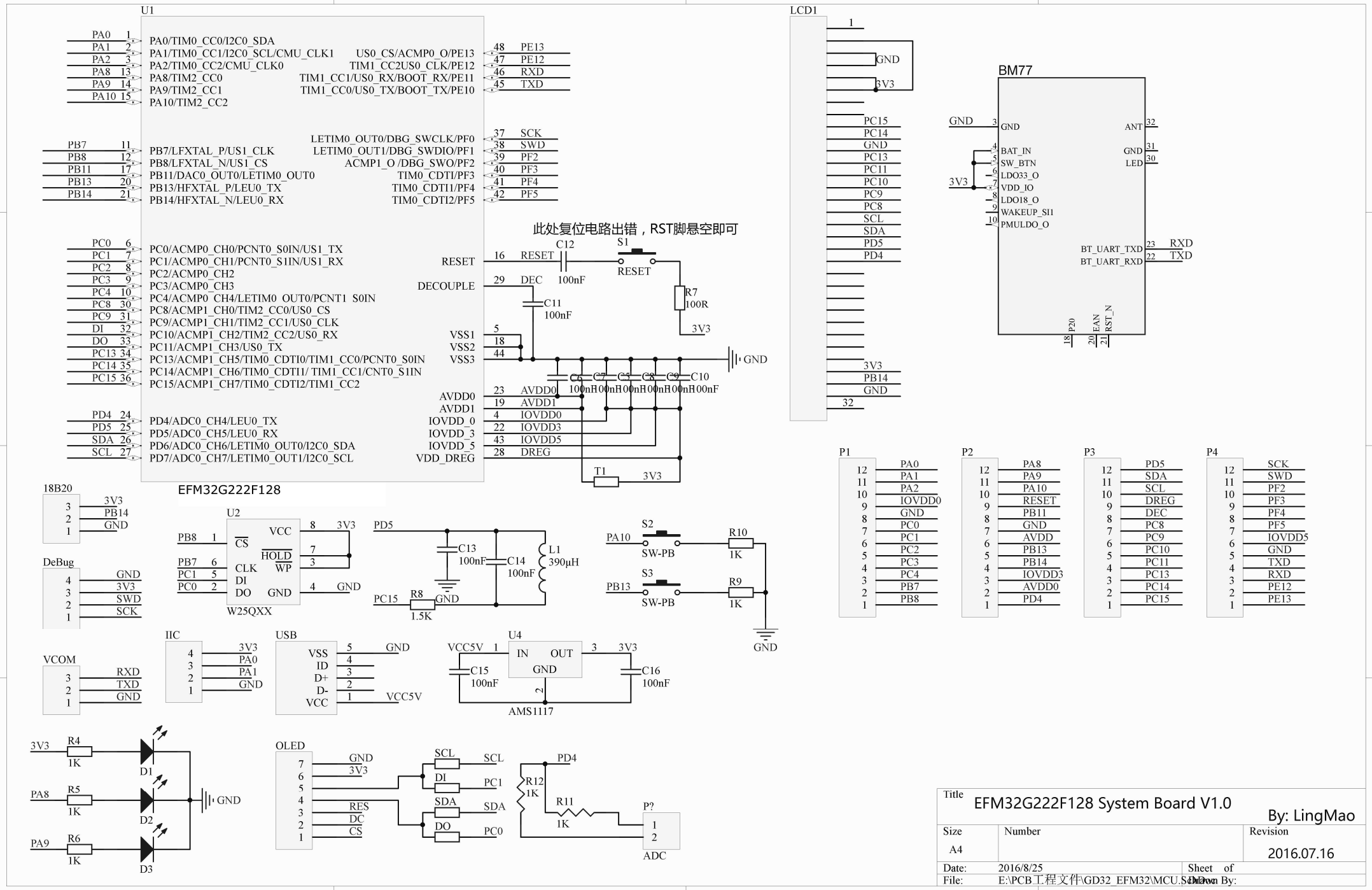
U1
PA0/TIM0_CC0/I2C0_SDA
PA1/TIM0_CC1/I2C0_SCL/CMU_CLK1
PA2/TIM0_CC2/CMU_CLK0
PA8/TIM2_CC0
PA9/TIM2_CC1
PA10/TIM2_CC2
PB7/LFXTAL_P/US1_CLK
PB8/LFXTAL_N/US1_CS
PB11/DAC0_OUT0/LETIM0_OUT0
PB13/HFXTAL_P/LEU0_TX
PB14/HFXTAL_N/LEU0_RX
PC0/ACMP0_CH0/PCNT0_S0IN/US1_TX
PC1/ACMP0_CH1/PCNT0_S1IN/US1_RX
PC2/ACMP0_CH2
PC3/ACMP0_CH3
PC4/ACMP0_CH4/LETIM0_OUT0/PCNT1_S0IN
PC8/ACMP1_CH0/TIM2_CC0/US0_CS
PC9/ACMP1_CH1/TIM2_CC1/US0_CLK
PC10/ACMP1_CH2/TIM2_CC2/US0_RX
PC11/ACMP1_CH3/US0_TX
PC13/ACMP1_CH5/TIM0_CDTI0/TIM1_CC0/PCNT0_S0IN
PC14/ACMP1_CH6/TIM0_CDTI1/TIM1_CC1/CNT0_S1IN
PC15/ACMP1_CH7/TIM0_CDTI2/TIM1_CC2
PD4/ADC0_CH4/LEU0_TX
PD5/ADC0_CH5/LEU0_RX
PD6/ADC0_CH6/LETIM0_OUT0/I2C0_SDA
PD7/ADC0_CH7/LETIM0_OUT1/I2C0_SCL
US0_CS/ACMP0_O/PE13
TIM1_CC2US0_CLK/PE12
TIM1_CC1/US0_RX/BOOT_RX/PE11
TIM1_CC0/US0_TX/BOOT_TX/PE10
LETIM0_OUT0/DBG_SWCLK/PF0
LETIM0_OUT1/DBG_SWDIO/PF1
ACMP1_O /DBG_SWO/PF2
TIM0_CDTI/PF3
TIM0_CDTI1/PF4
TIM0_CDTI2/PF5
RESET
DECOUPLE
VSS1
VSS2
VSS3
AVDD0
AVDD1
IOVDD_0
IOVDD_3
IOVDD_5
VDD_DREG
EFM32G222F128
此处复位电路出错，RST脚悬空即可
C12
100nF
S1
RESET
R7
100R
3V3
C11
100nF
GND
C6 C7 C5 C8 C9 C10
100nF
T1
LCD1
GND
3V3
PC15
PC14
PC13
PC11
PC10
PC9
PC8
SCL
SDA
PD5
PD4
PB14
BM77
ANT
BAT_IN
SW_BTN
LDO33_O
VDD_IO
LDO18_O
WAKEUP_SI1
PMULDO_O
LED
BT_UART_TXD
BT_UART_RXD
RXD
TXD
P20
EAN
RST_N
P1
P2
P3
P4
18B20
DeBug
VCOM
U2
W25QXX
CS
HOLD
WP
CLK
DI
DO
C13
100nF
C14
100nF
L1
390μH
R8
1.5K
S2
S3
SW-PB
R10
R9
1K
IIC
USB
VSS
ID
D+
D-
VCC
VCC5V
U4
IN
OUT
C15
100nF
C16
100nF
AMS1117
R4
R5
R6
D1
D2
D3
OLED
RES
DC
CS
R12
R11
P?
ADC
Title
EFM32G222F128 System Board V1.0
By: LingMao
Size
A4
Number
Revision
2016.07.16
Date: 2016/8/25
File: E:\PCB工程文件\GD32_EFM32\MCU.SchDoc
Sheet of
Drawn By: