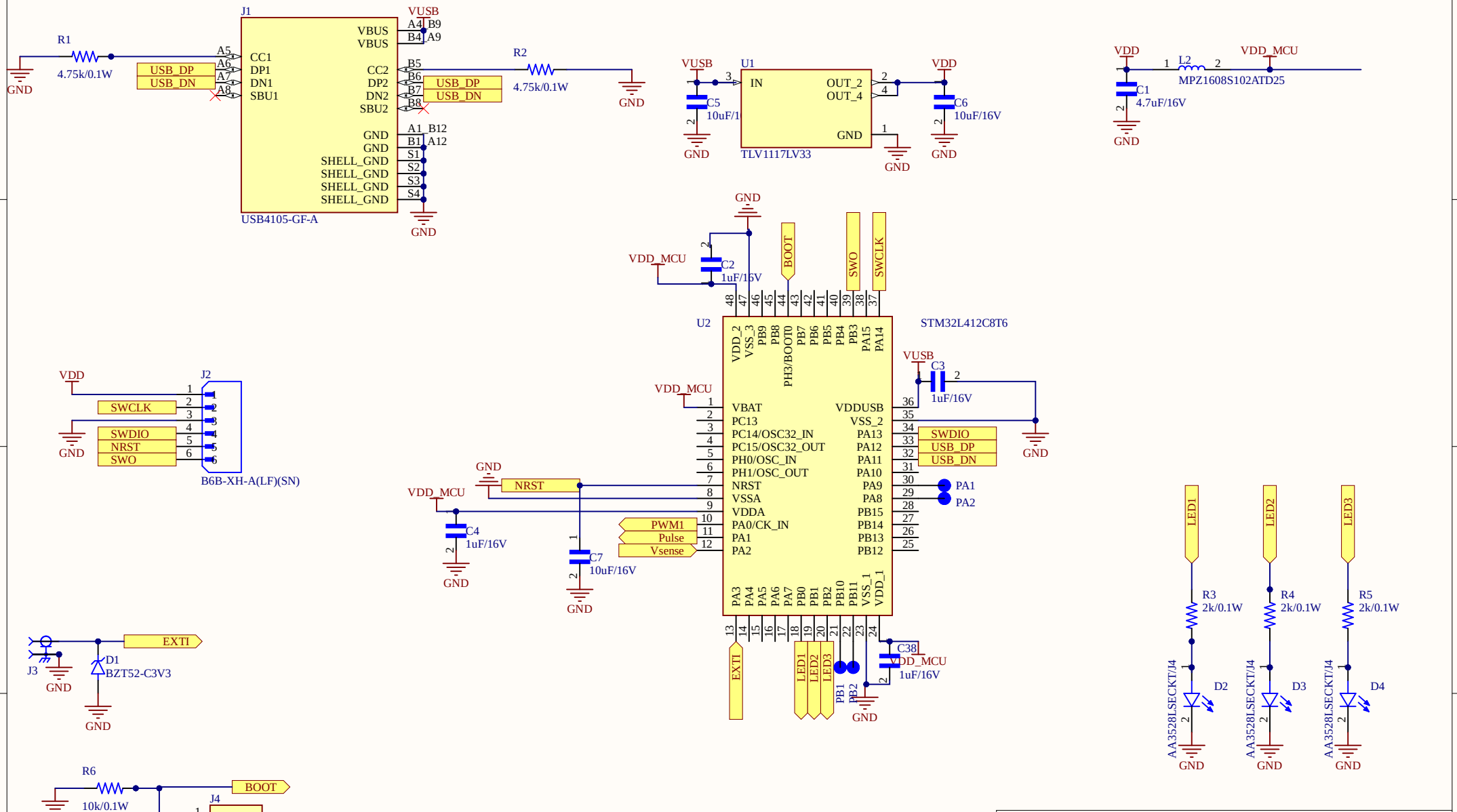

Title		
Size A4	Number	Revision
Date: 9-26-2023		Sheet of
File: C:\Users\..\Controller.SchDoc		Drawn By:

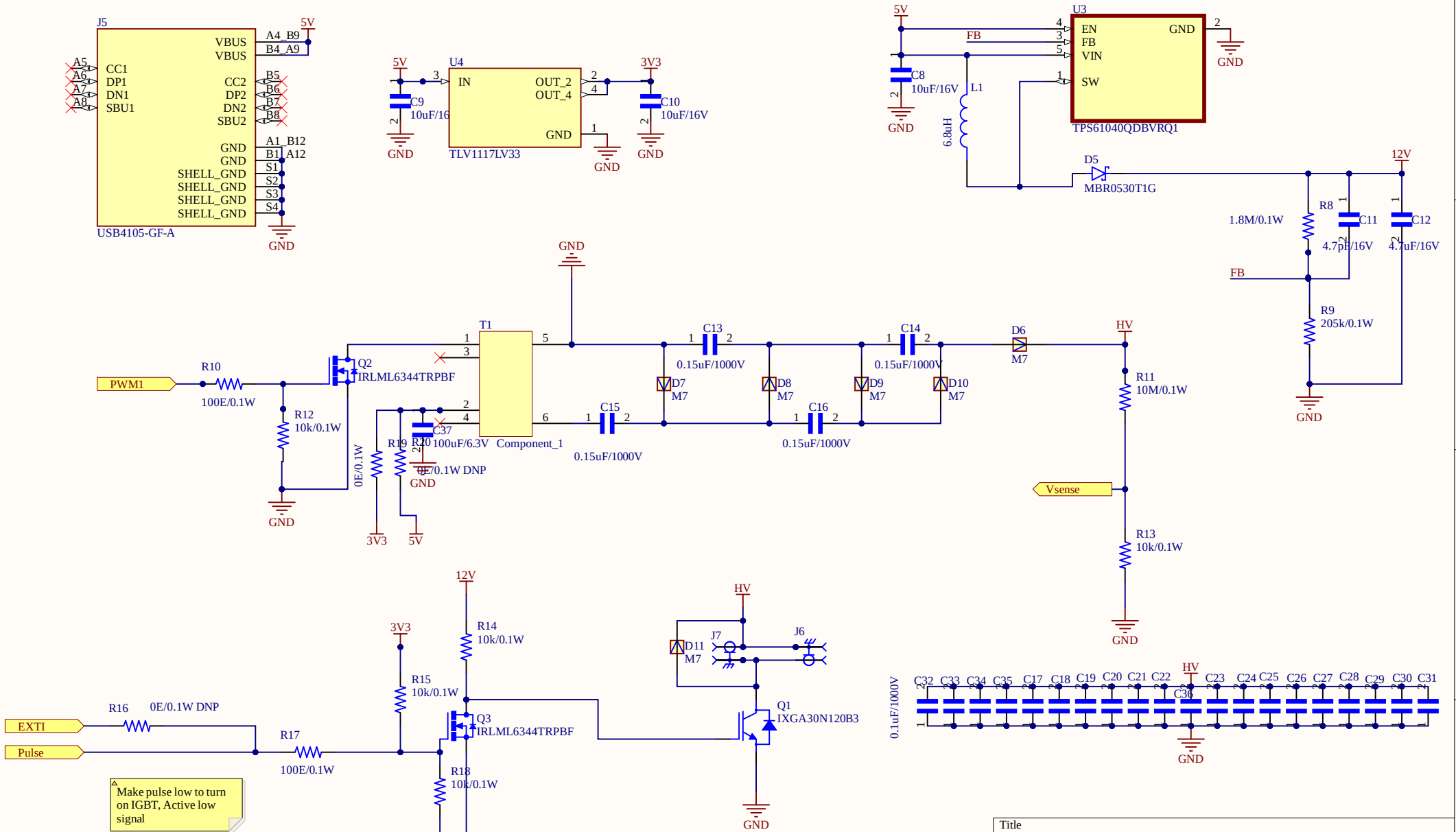
J5
USB4105-GF-A
VBUS
VBUS
CC1
DP1
DN1
SBU1
CC2
DP2
DN2
SBU2
GND
GND
SHELL_GND
SHELL_GND
SHELL_GND
SHELL_GND
A4_B9
B4_A9
B5
B6
B7
B8
A1_B12
B1_A12
S1
S2
S3
S4
A5
A6
A7
A8
5V
GND
U4
TLV1117LV33
IN
OUT_2
OUT_4
GND
C9
10uF/16
C10
10uF/16V
3V3
U3
TPS61040QDBVRQ1
EN
FB
VIN
SW
GND
C8
10uF/16V
L1
6.8uH
D5
MBR0530T1G
12V
R8
1.8M/0.1W
C11
4.7pF/16V
C12
4.7uF/16V
R9
205k/0.1W
T1
Component_1
Q2
IRLML6344TRPBF
PWM1
R10
100E/0.1W
R12
10k/0.1W
0E/0.1W
R19
R20
0E/0.1W DNP
C37
100uF/6.3V
C13
0.15uF/1000V
C14
0.15uF/1000V
C15
0.15uF/1000V
C16
0.15uF/1000V
D7
M7
D8
M7
D9
M7
D10
M7
D6
M7
HV
R11
10M/0.1W
Vsense
R13
10k/0.1W
R14
10k/0.1W
R15
10k/0.1W
Q3
IRLML6344TRPBF
R18
10k/0.1W
EXTI
Pulse
R16
0E/0.1W DNP
R17
100E/0.1W
Make pulse low to turn on IGBT, Active low signal
D11
M7
J7
J6
Q1
IXGA30N120B3
C32
C33
C34
C35
C17
C18
C19
C20
C21
C22
C36
C23
C24
C25
C26
C27
C28
C29
C30
C31
0.1uF/1000V
Title
Size
A4
Number
Revision
Date:
9-26-2023
Sheet of
File:
C:\Users\..\Power.SchDoc
Drawn By: