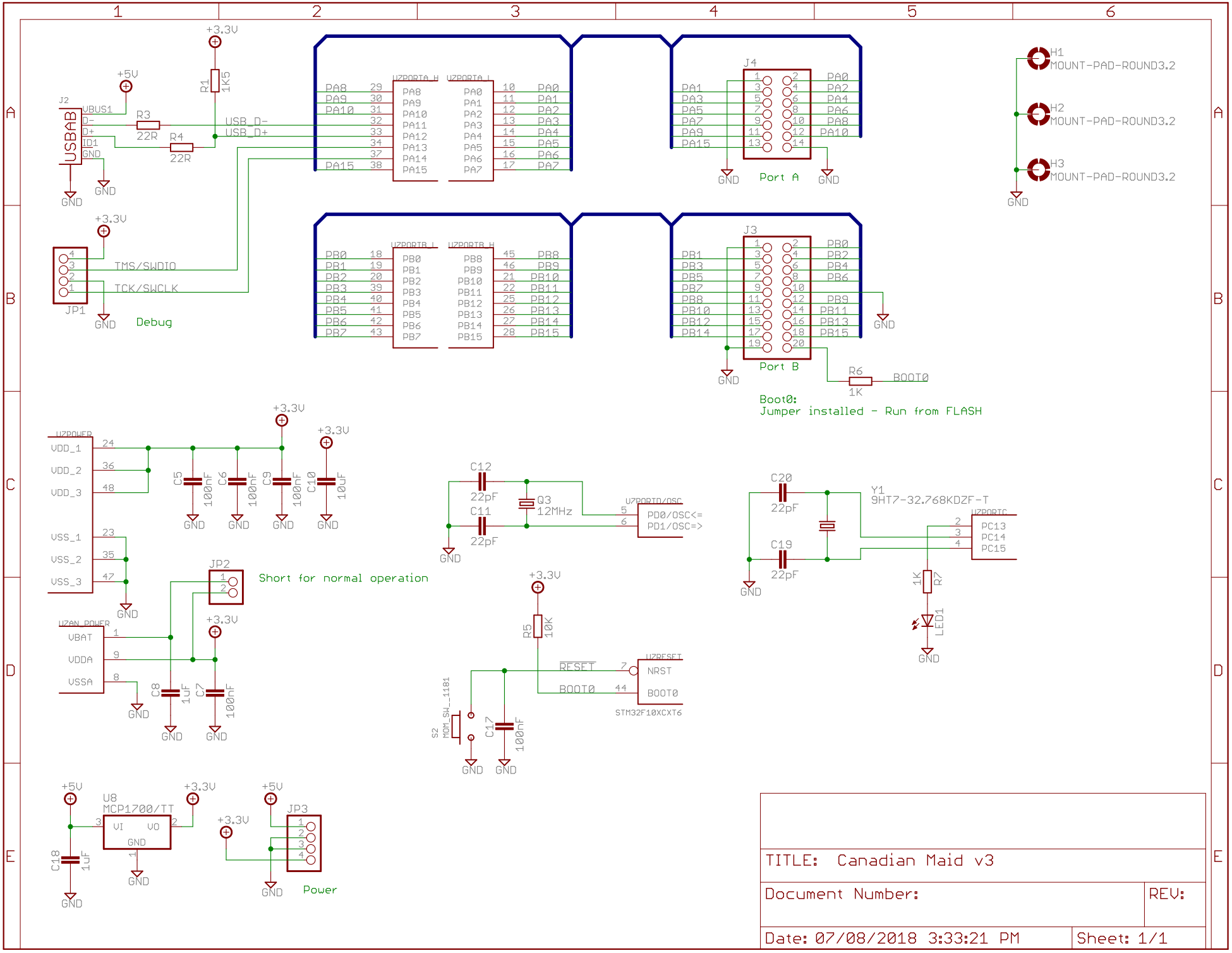

TITLE: Canadian Maid v3

Document Number:

REV:

Date: 07/08/2018 3:33:21 PM

Sheet: 1/1