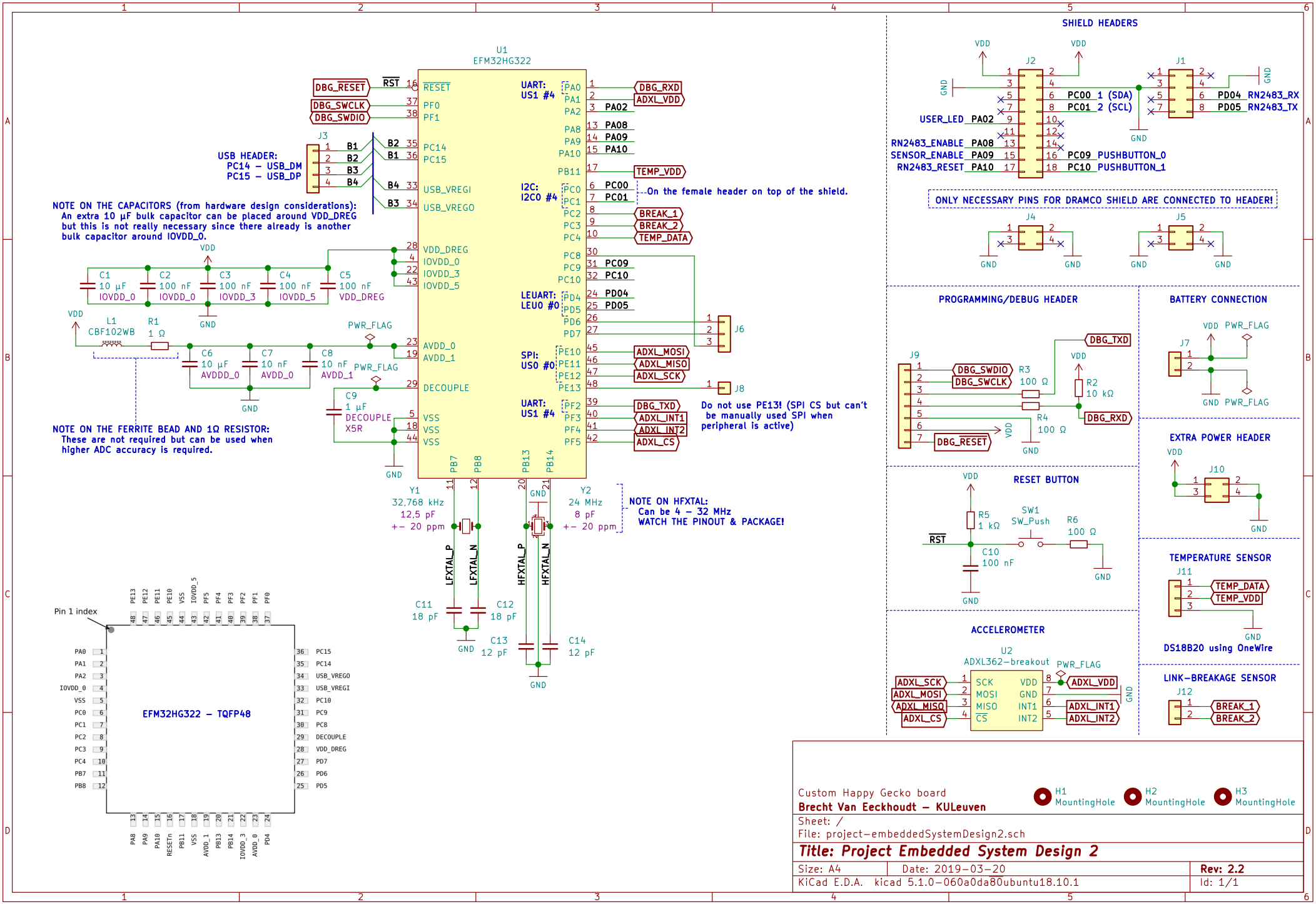
U1
EFM32HG322
DBG_RESET
DBG_SWCLK
DBG_SWDIO
RST
RESET
PF0
PF1
PC14
PC15
USB_VREGI
USB_VREGO
VDD_DREG
IOVDD_0
IOVDD_3
IOVDD_5
AVDD_0
AVDD_1
DECOUPLE
VSS
UART: US1 #4
PA0
PA1
PA2
PA8
PA9
PA10
PB11
I2C: I2C0 #4
PC0
PC1
PC2
PC3
PC4
PC8
PC9
PC10
LEUART: LEU0 #0
PD4
PD5
PD6
PD7
SPI: US0 #0
PE10
PE11
PE12
PE13
UART: US1 #4
PF2
PF3
PF4
PF5
DBG_RXD
ADXL_VDD
TEMP_VDD
TEMP_DATA
BREAK_1
BREAK_2
ADXL_MOSI
ADXL_MISO
ADXL_SCK
DBG_TXD
ADXL_INT1
ADXL_INT2
ADXL_CS
J3
USB HEADER:
PC14 – USB_DM
PC15 – USB_DP
NOTE ON THE CAPACITORS (from hardware design considerations):
An extra 10 µF bulk capacitor can be placed around VDD_DREG but this is not really necessary since there already is another bulk capacitor around IOVDD_0.
C1 10 µF IOVDD_0
C2 100 nF IOVDD_0
C3 100 nF IOVDD_3
C4 100 nF IOVDD_5
C5 100 nF VDD_DREG
L1 CBF102WB
R1 1 Ω
C6 10 µF AVDDD_0
C7 10 nF AVDD_0
C8 10 nF AVDD_1
C9 1 µF DECOUPLE X5R
PWR_FLAG
NOTE ON THE FERRITE BEAD AND 1Ω RESISTOR:
These are not required but can be used when higher ADC accuracy is required.
On the female header on top of the shield.
Do not use PE13! (SPI CS but can't be manually used SPI when peripheral is active)
Y1 32,768 kHz 12,5 pF +– 20 ppm
Y2 24 MHz 8 pF +– 20 ppm
NOTE ON HFXTAL:
Can be 4 – 32 MHz
WATCH THE PINOUT & PACKAGE!
LFXTAL_P
LFXTAL_N
HFXTAL_P
HFXTAL_N
C11 18 pF
C12 18 pF
C13 12 pF
C14 12 pF
Pin 1 index
EFM32HG322 – TQFP48
SHIELD HEADERS
J2
J1
USER_LED PA02
RN2483_ENABLE PA08
SENSOR_ENABLE PA09
RN2483_RESET PA10
PC00 1 (SDA)
PC01 2 (SCL)
PC09 PUSHBUTTON_0
PC10 PUSHBUTTON_1
PD04 RN2483_RX
PD05 RN2483_TX
ONLY NECESSARY PINS FOR DRAMCO SHIELD ARE CONNECTED TO HEADER!
J4
J5
PROGRAMMING/DEBUG HEADER
J9
DBG_SWDIO
DBG_SWCLK
DBG_RESET
DBG_TXD
DBG_RXD
R3 100 Ω
R4 100 Ω
R2 10 kΩ
BATTERY CONNECTION
J7
EXTRA POWER HEADER
J10
RESET BUTTON
R5 1 kΩ
SW1 SW_Push
R6 100 Ω
C10 100 nF
TEMPERATURE SENSOR
J11
TEMP_DATA
TEMP_VDD
DS18B20 using OneWire
ACCELEROMETER
U2
ADXL362–breakout
SCK
MOSI
MISO
CS
VDD
GND
INT1
INT2
ADXL_VDD
ADXL_INT1
ADXL_INT2
LINK–BREAKAGE SENSOR
J12
BREAK_1
BREAK_2
Custom Happy Gecko board
Brecht Van Eeckhoudt – KULeuven
H1 MountingHole
H2 MountingHole
H3 MountingHole
Sheet: /
File: project–embeddedSystemDesign2.sch
Title: Project Embedded System Design 2
Size: A4
Date: 2019–03–20
Rev: 2.2
KiCad E.D.A. kicad 5.1.0–060a0da80ubuntu18.10.1
Id: 1/1