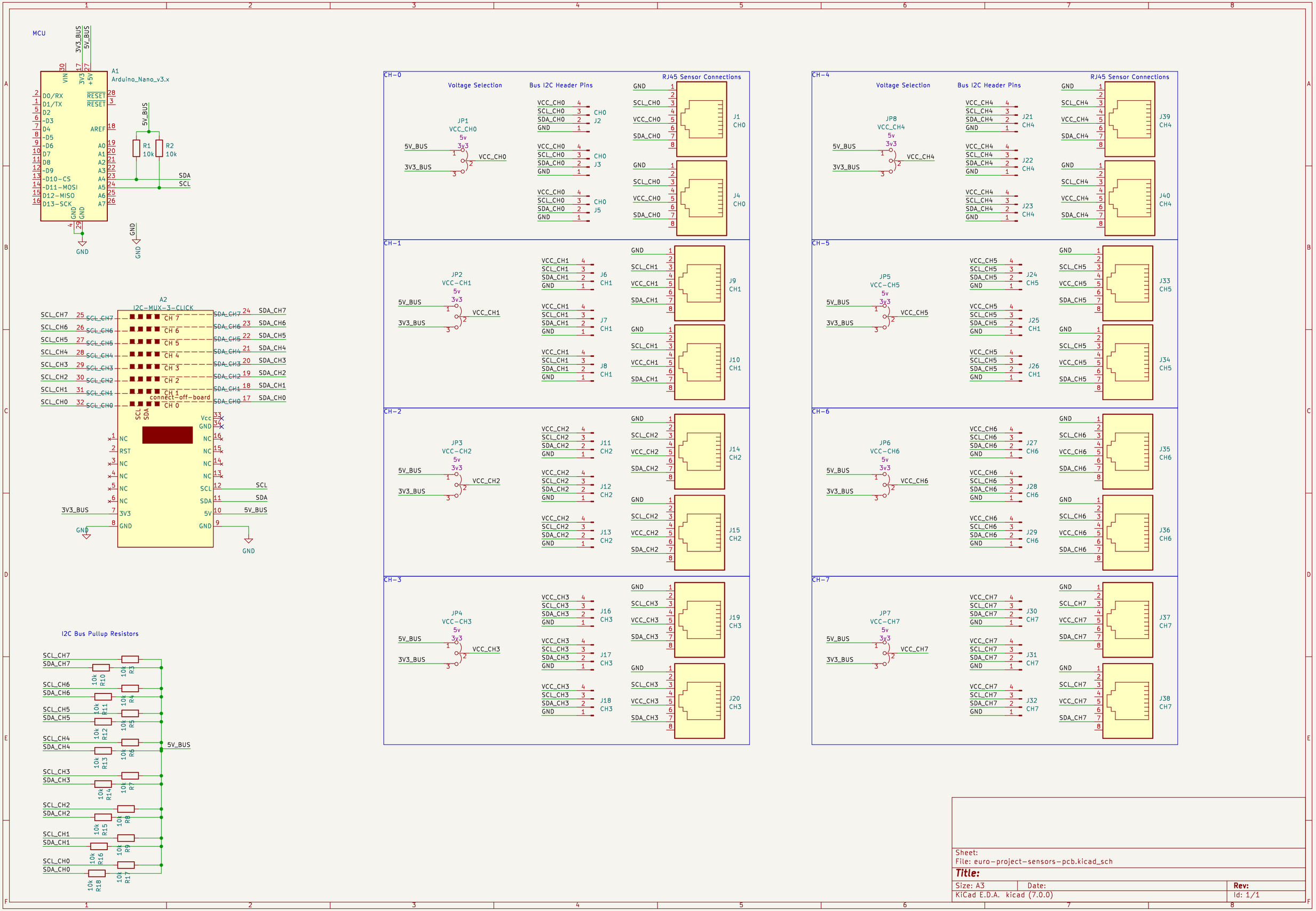
MCU
A1
Arduino_Nano_v3.x
3V3_BUS
5V_BUS
VIN
3V3
+5V
D0/RX
D1/TX
D2
~D3
D4
~D5
~D6
D7
D8
~D9
~D10-CS
~D11-MOSI
D12-MISO
D13-SCK
RESET
AREF
A0
A1
A2
A3
A4
A5
A6
A7
GND
R1
10k
R2
10k
SDA
SCL
A2
I2C-MUX-3-CLICK
SCL_CH7
SCL_CH6
SCL_CH5
SCL_CH4
SCL_CH3
SCL_CH2
SCL_CH1
SCL_CH0
SDA_CH7
SDA_CH6
SDA_CH5
SDA_CH4
SDA_CH3
SDA_CH2
SDA_CH1
SDA_CH0
CH 7
CH 6
CH 5
CH 4
CH 3
CH 2
CH 1
CH 0
connect-off-board
Vcc
NC
RST
3V3
5V
I2C Bus Pullup Resistors
10k R3
10k R4
10k R5
10k R6
10k R7
10k R8
10k R9
10k R17
10k R10
10k R11
10k R12
10k R13
10k R14
10k R15
10k R16
10k R18
CH-0
Voltage Selection
Bus I2C Header Pins
RJ45 Sensor Connections
JP1
VCC_CH0
5v
3v3
VCC_CH0
J1 CH0
J2 CH0
J3 CH0
J4 CH0
J5 CH0
CH-1
JP2
VCC-CH1
VCC_CH1
J6 CH1
J7 CH1
J8 CH1
J9 CH1
J10 CH1
CH-2
JP3
VCC-CH2
VCC_CH2
J11 CH2
J12 CH2
J13 CH2
J14 CH2
J15 CH2
CH-3
JP4
VCC-CH3
VCC_CH3
J16 CH3
J17 CH3
J18 CH3
J19 CH3
J20 CH3
CH-4
JP8
VCC_CH4
VCC_CH4
J21 CH4
J22 CH4
J23 CH4
J39 CH4
J40 CH4
CH-5
JP5
VCC-CH5
VCC_CH5
J24 CH5
J25 CH1
J26 CH1
J33 CH5
J34 CH5
CH-6
JP6
VCC-CH6
VCC_CH6
J27 CH6
J28 CH6
J29 CH6
J35 CH6
J36 CH6
CH-7
JP7
VCC-CH7
VCC_CH7
J30 CH7
J31 CH7
J32 CH7
J37 CH7
J38 CH7
Sheet:
File: euro-project-sensors-pcb.kicad_sch
Title:
Size: A3
Date:
Rev:
KiCad E.D.A. kicad (7.0.0)
Id: 1/1