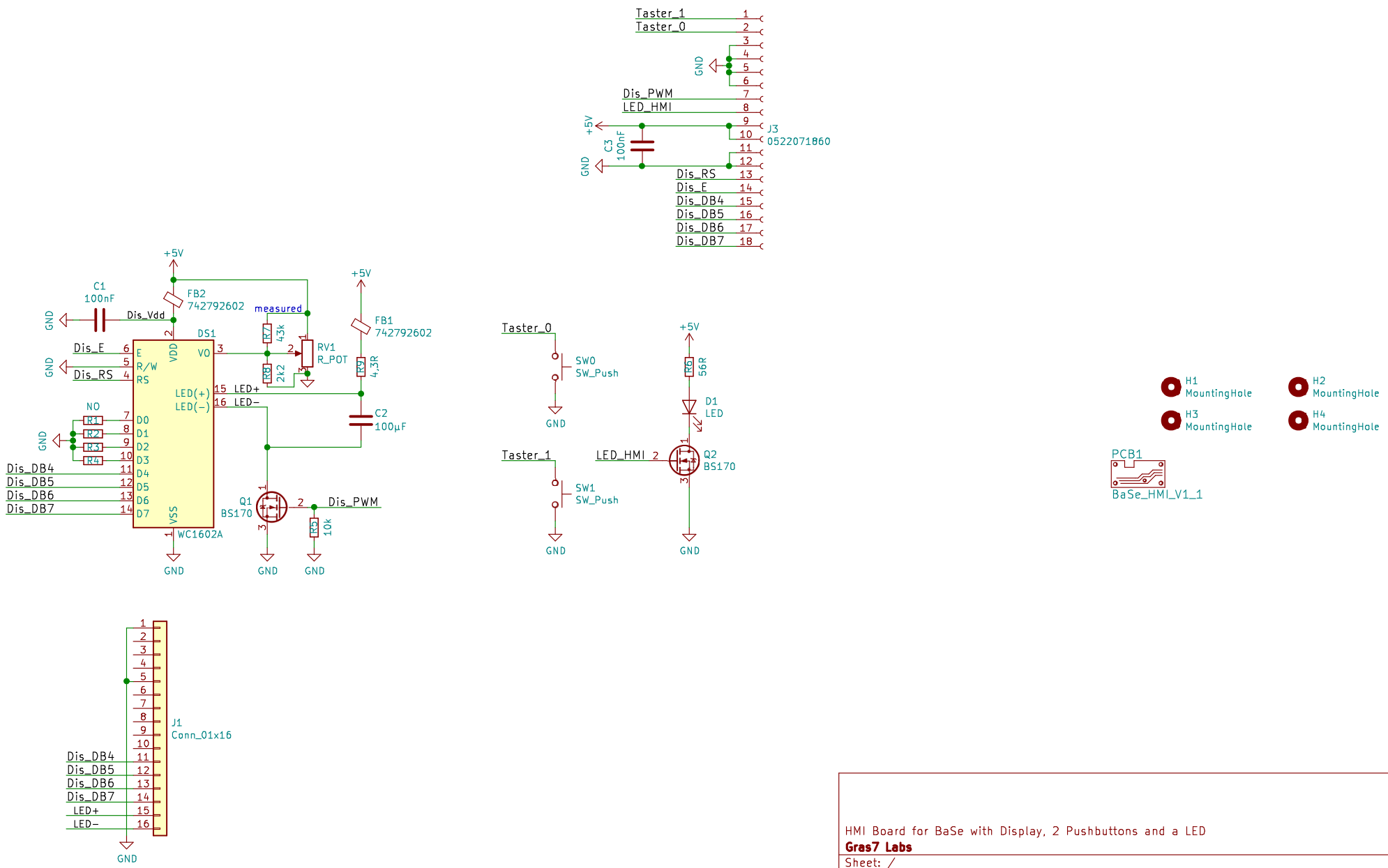

HMI Board for BaSe with Display, 2 Pushbuttons and a LED

Gras7 Labs

Sheet: /

File: BaSe_HMI_V1_1.sch

Title: BaSe_HMI_V1_1

Size: A4	Date: 28 apr 2016	**Rev: 1**
KiCad E.D.A. kicad 5.1.5+dfsg1-2build2		Id: 1/1