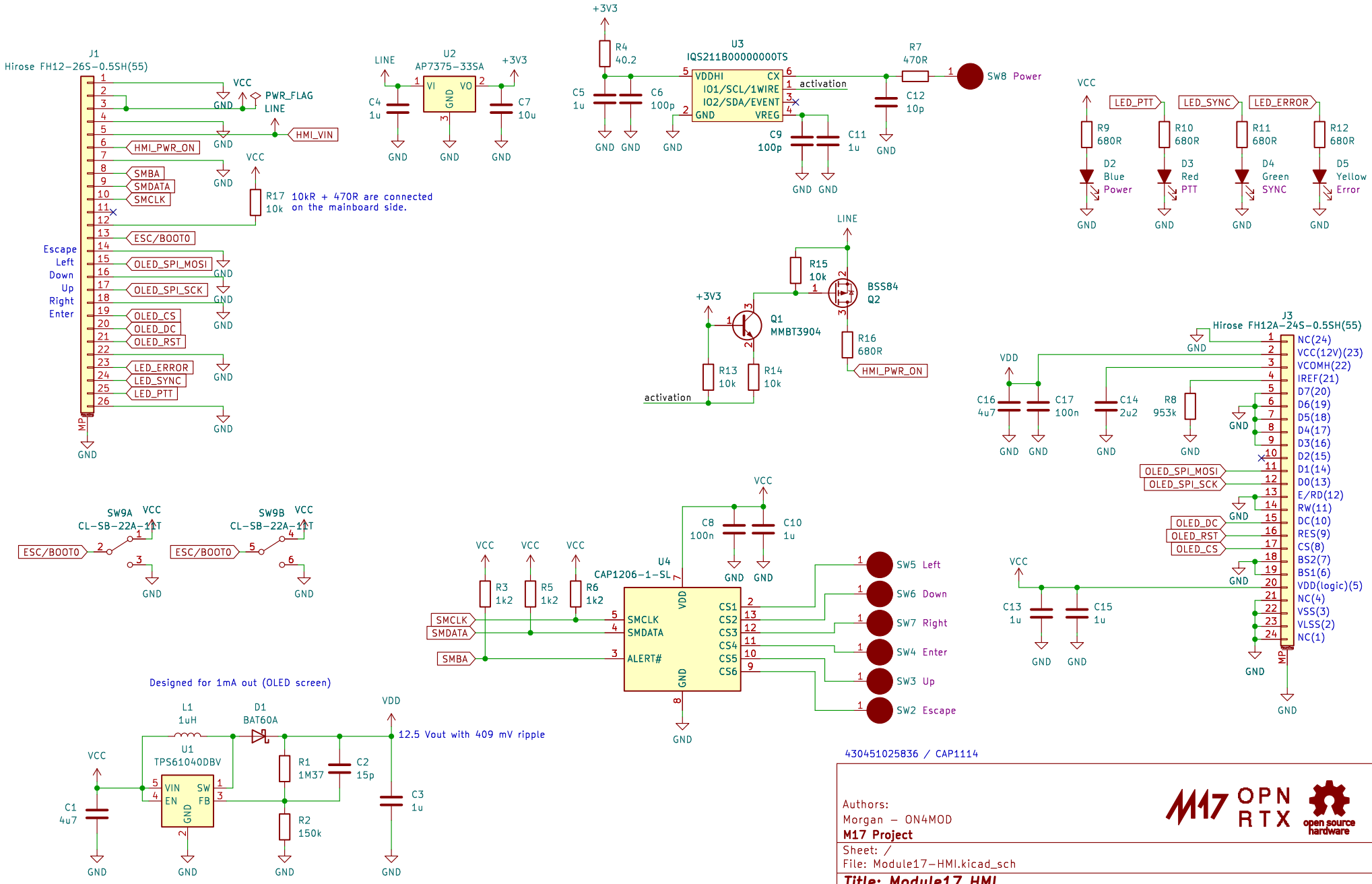
J1
Hirose FH12-26S-0.5SH(55)
VCC
PWR_FLAG
LINE
HMI_VIN
HMI_PWR_ON
SMBA
SMDATA
SMCLK
R17 10k
10kR + 470R are connected on the mainboard side.
ESC/BOOT0
OLED_SPI_MOSI
OLED_SPI_SCK
OLED_CS
OLED_DC
OLED_RST
LED_ERROR
LED_SYNC
LED_PTT
Escape
Left
Down
Up
Right
Enter
GND
U2
AP7375-33SA
VI
VO
+3V3
C4 1u
C7 10u
U3
IQS211B00000000TS
VDDHI
IO1/SCL/1WIRE
IO2/SDA/EVENT
VREG
CX
activation
R4 40.2
C5 1u
C6 100p
C9 100p
C11 1u
R7 470R
C12 10p
SW8 Power
R9 680R
R10 680R
R11 680R
R12 680R
D2 Blue Power
D3 Red PTT
D4 Green SYNC
D5 Yellow Error
R15 10k
BSS84 Q2
Q1 MMBT3904
R16 680R
R13 10k
R14 10k
J3
Hirose FH12A-24S-0.5SH(55)
NC(24)
VCC(12V)(23)
VCOMH(22)
IREF(21)
D7(20)
D6(19)
D5(18)
D4(17)
D3(16)
D2(15)
D1(14)
D0(13)
E/RD(12)
RW(11)
DC(10)
RES(9)
CS(8)
BS2(7)
BS1(6)
VDD(logic)(5)
NC(4)
VSS(3)
VLSS(2)
NC(1)
VDD
C16 4u7
C17 100n
C14 2u2
R8 953k
C13 1u
C15 1u
SW9A CL-SB-22A-11T
SW9B CL-SB-22A-11T
U4
CAP1206-1-SL
C8 100n
C10 1u
R3 1k2
R5 1k2
R6 1k2
SMCLK
SMDATA
SMBA
ALERT#
CS1
CS2
CS3
CS4
CS5
CS6
SW5 Left
SW6 Down
SW7 Right
SW4 Enter
SW3 Up
SW2 Escape
Designed for 1mA out (OLED screen)
L1 1uH
D1 BAT60A
U1 TPS61040DBV
VIN
EN
SW
FB
C1 4u7
R1 1M37
R2 150k
C2 15p
C3 1u
12.5 Vout with 409 mV ripple
430451025836 / CAP1114
Authors:
Morgan – ON4MOD
M17 Project
Sheet: /
File: Module17-HMI.kicad_sch
Title: Module17 HMI
Size: A4
Date: 2024-06-19
Rev: Rev 1.0
KiCad E.D.A. 8.0.3
Id: 1/1
M17 OPN RTX
open source hardware