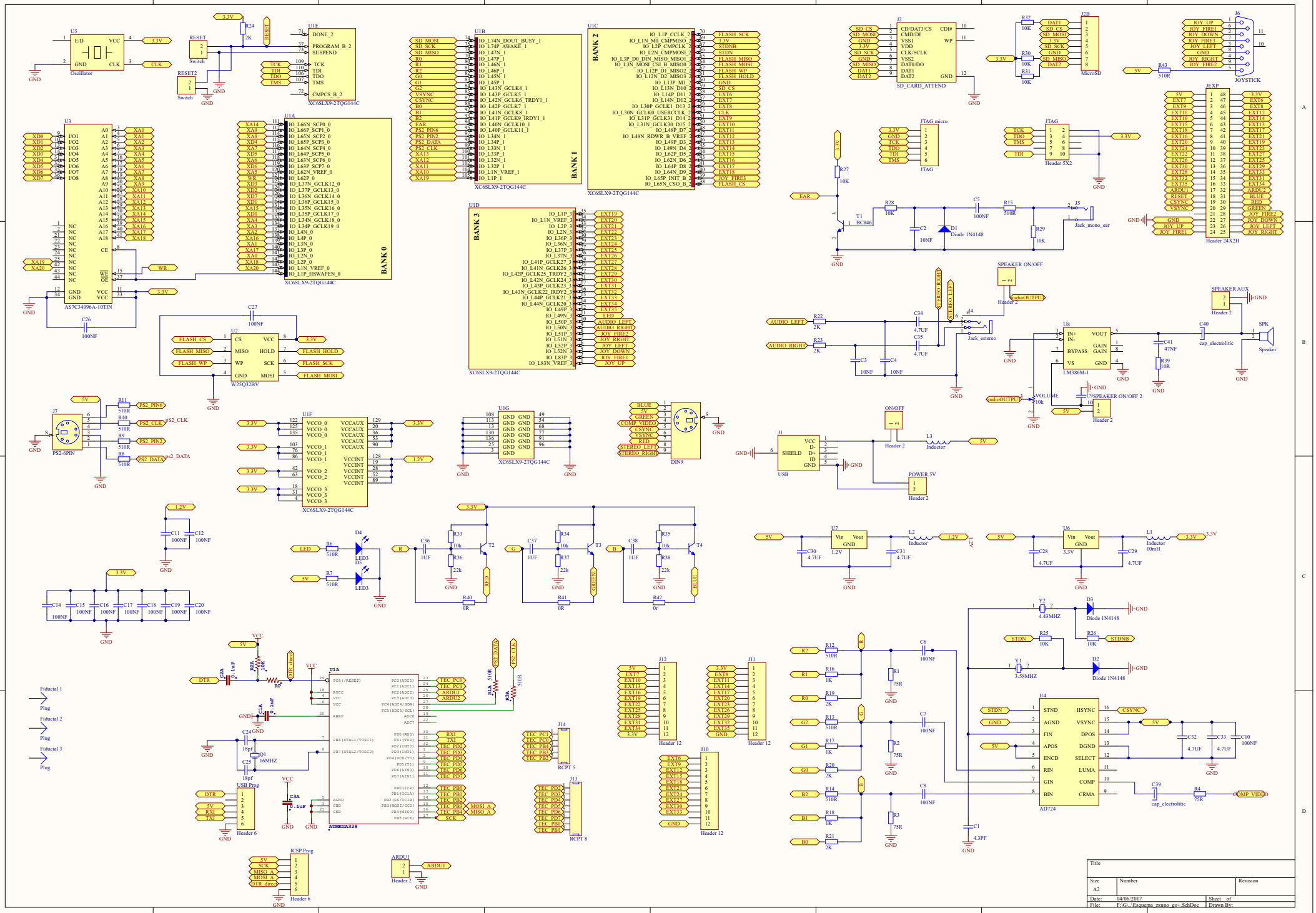
U5
Oscillator
U1E
XC6SLX9-2TQG144C
U1A
U1B
U1C
U1D
U1F
U1G
BANK 0
BANK 1
BANK 2
BANK 3
U3
AS7C34096A-10TIN
U2
W25Q32BV
J2
SD_CARD_ATTEND
J2B
MicroSD
J6
JOYSTICK
JEXP
Header 24X2H
JTAG micro
JTAG
Header 5X2
T1
BC846
D1
Diode 1N4148
J5
Jack_mono_ear
SPEAKER ON/OFF
Header 2
Jack_estereo
SPEAKER AUX
U8
LM386M-1
SPK
Speaker
J7
PS2-6PIN
DIN9
J1
USB
POWER 5V
Inductor
U7
U6
Inductor 10mH
D4
LED3
D5
LED3
T2
T3
T4
Y2
4.43MHZ
Y1
3.58MHZ
Diode 1N4148
U4
AD724
J12
Header 12
J11
Header 12
J10
Header 12
J14
RCPT 5
J13
RCPT 8
U1A
ATMEGA328
Q1
16MHZ
USB Prog
Header 6
ICSP Prog
Header 6
Fiducial 1
Fiducial 2
Fiducial 3
Plug
Header 2
Header 2
Header 2
Header 2
Header 2
Header 2
Header 2
Switch
Switch
Header 2
Header 2
Title
Size
A2
Number
Revision
Date: 04/06/2017
Sheet of
File: F:\G...\Схема_zxuno_go+.SchDoc
Drawn By: