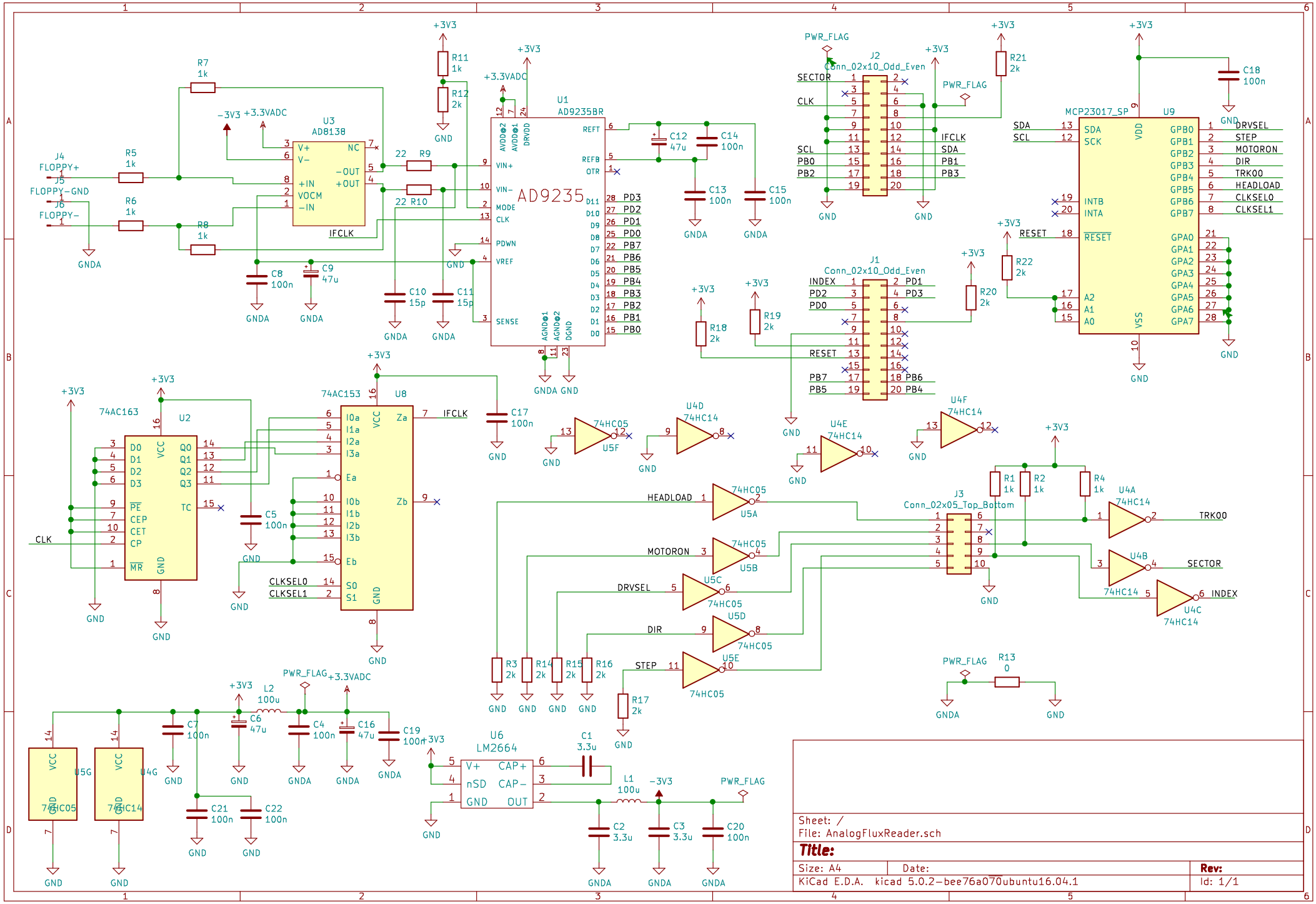
J4
FLOPPY+
J5
FLOPPY-GND
J6
FLOPPY-
R5 1k
R6 1k
R7 1k
R8 1k
U3
AD8138
V+
V-
+IN
VOCM
-IN
NC
-OUT
+OUT
IFCLK
-3V3
+3.3VADC
+3V3
R11 1k
R12 2k
GND
22 R9
22 R10
C8 100n
C9 47u
C10 15p
C11 15p
GNDA
U1
AD9235BR
AD9235
AVDD@2
AVDD@1
DRVDD
VIN+
VIN-
MODE
CLK
PDWN
VREF
SENSE
REFT
REFB
OTR
AGND@1
AGND@2
DGND
D11 PD3
D10 PD2
D9 PD1
D8 PD0
D7 PB7
D6 PB6
D5 PB5
D4 PB4
D3 PB3
D2 PB2
D1 PB1
D0 PB0
C12 47u
C14 100n
C13 100n
C15 100n
PWR_FLAG
J2
Conn_02x10_Odd_Even
SECTOR
CLK
SCL
PB0
PB2
IFCLK
SDA
PB1
PB3
R21 2k
MCP23017_SP
U9
SDA
SCK
VDD
VSS
INTB
INTA
RESET
A2
A1
A0
GPB0 DRVSEL
GPB1 STEP
GPB2 MOTORON
GPB3 DIR
GPB4 TRK00
GPB5 HEADLOAD
GPB6 CLKSEL0
GPB7 CLKSEL1
GPA0
GPA1
GPA2
GPA3
GPA4
GPA5
GPA6
GPA7
C18 100n
R22 2k
R20 2k
J1
Conn_02x10_Odd_Even
INDEX
PD2
PD0
RESET
PB7
PB5
PD1
PD3
PB6
PB4
R18 2k
R19 2k
74AC163
U2
D0
D1
D2
D3
PE
CEP
CET
CP
MR
Q0
Q1
Q2
Q3
TC
CLK
C5 100n
74AC153
U8
I0a
I1a
I2a
I3a
Ea
I0b
I1b
I2b
I3b
Eb
S0
S1
Za
Zb
CLKSEL0
CLKSEL1
C17 100n
74HC05
U5F
U4D
74HC14
U4E
U4F
HEADLOAD
MOTORON
DRVSEL
DIR
STEP
U5A
U5B
U5C
U5D
U5E
R3 2k
R14 2k
R15 2k
R16 2k
R17 2k
J3
Conn_02x05_Top_Bottom
R1 1k
R2 1k
R4 1k
U4A
U4B
U4C
TRK00
SECTOR
INDEX
R13 0
U5G
U4G
L2 100u
C6 47u
C7 100n
C4 100n
C16 47u
C19 100n
C21 100n
C22 100n
U6
LM2664
V+
nSD
GND
CAP+
CAP-
OUT
C1 3.3u
L1 100u
C2 3.3u
C3 3.3u
C20 100n
Sheet: /
File: AnalogFluxReader.sch
Title:
Size: A4
Date:
Rev:
KiCad E.D.A. kicad 5.0.2-bee76a070ubuntu16.04.1
Id: 1/1