By downloading this file to your computer, you are accepting and agreeing to the terms of AWC's end-user license agreement (EULA), which may be viewed here: End User License Agreement. Copyright infringement is a violation of federal law subject to criminal and civil penalties.

2018

EDITION

WFCM

WOOD FRAME CONSTRUCTION MANUAL

for One- and Two-Family Dwellings

ANSI
American National Standards Institute

APPROVED

AMERICAN WOOD COUNCIL

Updates and Errata
While every precaution has been taken to ensure the accuracy of this document, errors may have occurred during development. Updates or Errata are posted to the American Wood Council website at www.awc.org. Technical inquiries may be addressed to info@awc.org.

On behalf of the industry it represents, AWC is committed to ensuring a resilient, safe, and sustainable built environment. To achieve these objectives, AWC contributes to the development of sound public policies, codes, and regulations which allow for the appropriate and responsible manufacture and use of wood products. We support the utilization of wood products by developing and disseminating consensus standards, comprehensive technical guidelines, and tools for wood design and construction, as well as providing education regarding their application.

2018

EDITION

WFCM

WOOD FRAME CONSTRUCTION MANUAL

for One- and Two-Family Dwellings

ANSI
American National Standards Institute

APPROVED

AMERICAN WOOD COUNCIL

Wood Frame Construction Manual (WFCM) for One- and Two-Family Dwellings 2018 Edition

First Web Version: November 2017

ISBN 978-1-940383-44-6

Copyright © 2017 by American Wood Council
All rights reserved. No part of this publication may be reproduced, distributed, or transmitted in any form or by any means, including, without limitation, electronic, optical, or mechanical means (by way of example and not limitation, photocopying, or recording by or in an information storage retrieval system) without express written permission of the American Wood Council. For information on permission to copy material, please contact:

Copyright Permission
American Wood Council
222 Catoctin Circle, SE, Suite 201
Leesburg, VA 20175
info@awc.org

Copyright © American Wood Council. Downloaded/printed pursuant to License Agreement. No reproduction or transfer authorized.

Foreword

The *Wood Frame Construction Manual for One- and Two-Family Dwellings* (*WFCM*) provides engineered and prescriptive design requirements for wood frame construction used in one and two-family dwellings. The provisions of the *WFCM* are based on dead, live, snow, seismic and wind loads derived from provisions of the *ASCE 7-16 Minimum Design Loads and Associated Criteria for Buildings and Other Structures*. In general, the framing systems described in the *WFCM* utilize repetitive member wood assemblies.

The *WFCM* includes general information on loads and resistances. The limitations of applicability are provided in Chapters 2 and 3. Chapter 2 provides minimum loads for buildings within the scope of this document for the purpose of establishing specific resistance requirements. Note that Chapter 2 also contains some necessary construction details. These details have been derived from typical code provisions and are included in Chapter 2 for the convenience of the designer. Chapter 3 provides several prescriptive solutions derived from Chapter 2 load requirements. Therefore, it is perfectly acceptable to use Chapter 3 provisions for parts of a design and Chapter 2 for other parts.

The user should be aware that tables often include condensed information that covers more than one design condition. In keeping with good engineering practice, this often results in tables that are based on the worst case. For specific design cases, the user may find advantages to computing design requirements directly from *ASCE 7-16* load requirements using the actual building geometry. This will usually result in some added economy in design.

Since the first edition of the *WFCM* in 1995, the Association's Technical Committee has continued to study and evaluate new data and developments in wood design. Subsequent editions of the *WFCM* have included appropriate revisions to provide for use of such new information. This edition incorporates numerous changes considered by AWC's ANSI-accredited Wood Design Standards Committee. The contributions of the members of this Committee to improvement of the *WFCM* as a national design standard for wood construction are especially recognized.

In developing the provisions of the *WFCM*, the most reliable data available from laboratory tests and experience with structures in-service have been carefully analyzed and evaluated for the purpose of providing a consistent standard of practice. It is intended that this document be used in conjunction with competent engineering design, accurate fabrication, and adequate supervision of construction. Therefore, AWC does not assume any responsibility for errors or omissions in the *WFCM* nor for engineering designs or plans prepared from it.

American Wood Council

Copyright © American Wood Council. Downloaded/printed pursuant to License Agreement. No reproduction or transfer authorized.
AMERICAN WOOD COUNCIL

Copyright © American Wood Council. Downloaded/printed pursuant to License Agreement. No reproduction or transfer authorized.
AMERICAN WOOD COUNCIL

Table of Contents

Chapter/Title Page

1 General Information 1
- 1.1 Scope 3
- 1.2 Materials Standards 4
- 1.3 Definitions 5
- 1.4 Symbols 9
- Figures 11

2 Engineered Design 13
- 2.1 General Provisions 15
- 2.2 Connections 17
- 2.3 Floor Systems 19
- 2.4 Wall Systems 21
- 2.5 Roof Systems 23
- List of Figures 26
- List of Tables 61

Chapter/Title Page

3 Prescriptive Design 113
- 3.1 General Provisions 115
- 3.2 Connections 116
- 3.3 Floor Systems 119
- 3.4 Wall Systems 121
- 3.5 Roof Systems 123
- List of Figures 125
- List of Tables 146
- Appendix A 331

Supplement 337

References 341

Copyright © American Wood Council. Downloaded/printed pursuant to License Agreement. No reproduction or transfer authorized.
AMERICAN WOOD COUNCIL

Copyright © American Wood Council. Downloaded/printed pursuant to License Agreement. No reproduction or transfer authorized.
AMERICAN WOOD COUNCIL

1

GENERAL INFORMATION

1.1 Scope 3

1.2 Materials Standards 4

1.3 Definitions 5

1.4 Symbols 9

Figure 1.1 Basic Wind Speeds for One- and Two-Family Dwellings Based on 3-second Gust Basic Wind Speeds for Risk Category II Buildings..... 11

Figure 1.2 Mean Roof Height (MRH) 12

Copyright © American Wood Council. Downloaded/printed pursuant to License Agreement. No reproduction or transfer authorized.

Table 1 Applicability Limitations

Attribute	Limitation	Reference Section	Figures
BUILDING DIMENSIONS			
Mean Roof Height (MRH)	33'	1.1.3.1a	1.2
Number of Stories	3	1.1.3.1a	-
Building Length and Width	80'	1.1.3.1b	-
LOAD ASSUMPTIONS (See Chapter 2 or Chapter 3 tables for load assumptions applicable to the specific tabulated requirement)			
Load Type	**Load Assumption**		
Partition Dead Load	0-8 psf of floor area		
Wall Assembly Dead Load	11-18 psf		
Floor Dead Load	10-20 psf		
Roof/Ceiling Assembly Dead Load	0-25 psf		
Floor Live Load	30-40 psf		
Roof Live Load	20 psf		
Ceiling Live Load	10-20 psf		
Ground Snow Load	0-70 psf		
Wind Load	90-195 mph wind speed (3-second gust) Exposure B, C, and D (See Figure 1.1)		
Seismic Load	Seismic Design Category (SDC) SDC A, B, C, D_0, D_1, and D_2		

Copyright © American Wood Council. Downloaded/printed pursuant to License Agreement. No reproduction or transfer authorized.

1.1 Scope

1.1.1 General

This Manual provides engineered (Chapter 2) and prescriptive (Chapter 3) design requirements for wood-frame construction used in one- and two-family dwellings. In lieu of these provisions, or where these provisions are not applicable, accepted engineering methods and practices in accordance with the governing building code shall be used. Structural elements that meet the applicability provisions of 1.1.3, but are not within the limits of the design provisions of this Manual shall be designed in accordance with the governing building code.

1.1.2 Design Loads

Structural systems in this Manual have been sized using design load provisions of *ASCE/SEI 7-16 Minimum Design Loads and Associated Criteria for Buildings and Other Structures*. The tabulated engineered design and prescriptive design provisions in Chapters 2 and 3 are applicable where any of the following load conditions exist:

- 0-70 psf ground snow load
- 90-195 mph (ASCE/SEI 7-16) 3-second gust basic wind speed (see Figure 1.1).
- Seismic Design Categories A-D

1.1.2.1 Torsion

For wind design, special design requirements for torsional load cases have not been tabulated. Where required, see *ASCE/SEI 7-16* torsional wind load provisions.

1.1.2.2 Sliding Snow

Design provisions for snow do not account for additional effects of snow sliding from a higher roof. Where required, see *ASCE/SEI 7-16* sliding snow provisions

1.1.3 Applicability

Wood-frame buildings built in accordance with this document shall be limited to all of the following conditions (see Table 1). Conditions not complying with this section shall be designed in accordance with accepted engineering practice.

1.1.3.1 Building Dimensions

a. Mean Roof Height The building shall not exceed three stories nor a mean roof height of 33 feet, measured from average grade to average roof elevation (see Figure 1.2).

b. Building Length and Width Neither the building length nor the building width, shall be greater than 80 feet.

1.1.3.2 Floor, Wall, and Roof Systems

Requirements for floor, wall, and roof systems shall be in accordance with the limitations in Chapters 2 and 3.

1.1.4 Foundation Provisions

The foundation provisions specified in this document are limited to the attachment of the building to the foundation. An adequate foundation system shall be provided to resist all required loads. Engineered and prescriptive design of the foundation for gravity, lateral, and uplift loads, including uplift and hold-down anchorage, shall be provided in accordance with the governing building code.

1.1.5 Protection of Openings

The tabulated wind requirements in this document are based on fully enclosed buildings where openings are designed for the appropriate wind loads; and protection, where required by the governing building code, is provided to maintain the building envelope.

1.1.6 Ancillary Structures

The design of ancillary structures such as decks, balconies, carports, and porches is not addressed in this standard. Design of ancillary structures for gravity, wind, or seismic loads shall be in accordance with the governing building code.

Copyright © American Wood Council. Downloaded/printed pursuant to License Agreement. No reproduction or transfer authorized.
AMERICAN WOOD COUNCIL

1.2 Materials Standards

The provisions of this standard are not intended to prevent the use of any material or method of construction not specifically prescribed herein. When it can be shown, and the authority having jurisdiction finds by experience, modeling, or testing by an approved agency, that a product or procedure provides equivalent or greater structural safety or durability, such product or procedure shall be deemed to conform to the requirements of this document.

1.2.1 Identification

All solid-sawn lumber, glued laminated timber, prefabricated wood I-joists, structural composite lumber, prefabricated wood trusses, gypsum, hardboard, and structural panels, shall conform to the applicable standards or grading rules specified in 1.2.1.1 through 1.2.1.8.

1.2.1.1 Lumber

All wood members used for load-bearing purposes, including end-jointed and edge-glued lumber, shall be identified by the grademark of a lumber grading or inspection agency which participates in an accreditation program, such as the American Lumber Standards Committee or equivalent. The grademark shall include an easily distinguishable mark or insignia of the grading agency which complies with the requirements of U.S. Department of Commerce Voluntary Product Standard 20 (PS20) *American Softwood Lumber Standard*.

1.2.1.2 Glued Laminated Timbers

Glued laminated timbers shall meet the provisions of ANSI A190.1 *Structural Glued Laminated Timber*.

1.2.1.3 Prefabricated Wood I-Joists

Assemblies using prefabricated wood I-joists shall meet the provisions of ASTM D5055 *Standard Specification for Establishing and Monitoring Structural Capacities of Prefabricated Wood I-Joists*, this Manual, the governing building code, and any additional requirements as set forth in the manufacturer's code evaluation report.

1.2.1.4 Structural Composite Lumber

Single members or assemblies using structural composite lumber shall meet the provisions of ASTM D5456 *Standard Specification for Evaluation of Structural Composite Lumber Products*, this Manual, the governing building code, and any additional requirements as set forth in the manufacturer's code evaluation report.

1.2.1.5 Prefabricated Wood Trusses

Assemblies using prefabricated wood trusses shall meet the provisions of this Manual, the governing building code, and any additional requirements as set forth in ANSI/TPI 1 *National Design Standard for Metal Plate Connected Wood Truss Construction*, the truss design drawings, or the manufacturer's code evaluation report.

1.2.1.6 Gypsum

Gypsum material used in a structural application shall meet the provisions of ASTM C 1396/C 1396M, *Standard Specification for Gypsum Board.*

1.2.1.7 Hardboard

Hardboard used in a structural application shall meet the provisions of ANSI/CPA A135.6 *Hardboard Siding*.

1.2.1.8 Structural Panels

1.2.1.8.1 Plywood Plywood used in structural applications shall meet the provisions of U.S. Department of Commerce Voluntary Product Standard 1 (PS1) *Structural Plywood*, U.S. Department of Commerce Voluntary Product Standard 2 (PS2) *Performance Standard for Wood-Based Structural-Use Panels,* or applicable code evaluation reports. Each panel or member shall be identified for grade, bond classification, and Performance Category by the trademarks of an approved testing and grading agency. The Performance Category value shall be used as the "nominal panel thickness" whenever referenced in this standard.

1.2.1.8.2 Oriented-Strand Board (OSB) Oriented-strand board used in structural applications shall meet the provisions of PS2 or applicable code evaluation reports. Each panel or member shall be identified for grade, bond classification, and Performance Category by the trademarks of an approved testing and grading agency. The Performance Category value shall be used as the "nominal panel thickness" whenever referenced in this standard.

1.2.1.8.3 Particleboard Particleboard used in structural applications shall conform to ANSI A208.1 *Particleboard Standard* and any additional requirements as set forth in the manufacturer's code evaluation report.

1.2.1.8.4 Fiberboard Fiberboard used in structural applications shall meet the provisions of ASTM C208 *Standard Specification for Cellulosic Fiber Insulating Board*.

1.2.1.8.5 Structural Panel Siding Structural panel siding used in structural applications shall meet the requirements of PS1, the governing building code, and any additional requirements as set forth in applicable code evaluation reports.

Copyright © American Wood Council. Downloaded/printed pursuant to License Agreement. No reproduction or transfer authorized.

1.2.2 Fasteners and Connectors

All fasteners and connectors shall conform to the standards specified in 1.2.2.1 through 1.2.2.7.

1.2.2.1 Bolts

Bolts shall comply with ANSI/ASME B18.2.1 *Square and Hex Bolts and Screws (Inch Series)*.

1.2.2.2 Lag Screws

Lag screws or lag bolts shall comply with ANSI/ASME B18.2.1 *Square and Hex Bolts and Screws (Inch Series)*.

1.2.2.3 Truss Metal Connector Plates

Truss metal connector plates shall meet the requirements of ANSI/TPI 1, the governing building code, and any additional requirements as set forth in the manufacturer's code evaluation reports.

1.2.2.4 Metal Connectors

Where metal plate or strapping size and gage are specified, minimum ASTM A653 *Standard Specification for Steel Sheet, Zinc-Coated (Galvanized) or Zinc-Iron Alloy-Coated (Galvannealed) by the Hot-Dip Process*, Structural Steel, Grade 33 steel shall be used. Other metal connectors shall meet the requirements of the governing building code and any additional requirements as set forth in the manufacturer's code evaluation reports.

1.2.2.5 Nails

Nails shall comply with ASTM F1667 *Standard Specification for Driven Fasteners: Nails, Spikes, and Staples*.

1.2.2.6 Pneumatic Nails and Staples

Pneumatic nails and staples shall meet the requirements of the governing building code and any additional requirements as set forth in the manufacturer's code evaluation reports.

1.2.2.7 Screws

Screws shall comply with ANSI/ASME B18.6.1 *Wood Screws (Inch Series)*.

1.3 Definitions

Apparent Rigidity A structural element's resistance to deflection from bending, shear and/or slip.

Approved Acceptable to the building official. (IBC definition)

Attic, Uninhabitable Without Storage The enclosed space between the ceiling joists of the top floor and the roof rafters or the space between roof truss bottom and top chords not intended for occupancy or storage and capable of resisting a minimum live load of 10 psf.

Attic, Uninhabitable With Limited Storage The enclosed space between the ceiling joists of the top floor and the roof rafters or the space between roof truss bottom and top chords not intended for occupancy but for limited storage and capable of resisting a minimum live load of 20 psf.

Average Grade The average elevation of the finished ground level adjoining the building at all exterior walls.

Base The level at which the horizontal seismic ground motions are considered to be imparted to the structure.

Base Shear Total design lateral force or shear at the base.

Blocking A wood member that provides edge support for sheathing or load path continuity such as below offset walls, offset floors, and between cantilever members.

Bottom Plate A horizontal wood member attached to the bottom of a frame wall and connected to floor joists, girders, slabs, or other members.

Boundary Element Diaphragm and shear wall boundary members to which sheathing transfers forces. Boundary elements include chords and collectors at diaphragm and shear wall perimeters, interior openings, discontinuities, and re-entrant corners.

Bridging Cross bracing or a wood member placed between joists to provide lateral support.

Building Aspect Ratio The ratio of maximum building length dimension to minimum building length dimension.

Building Endwall Width The dimension of the building parallel to roof framing members and perpendicular to the roof ridge.

Building Sidewall Length The dimension of the building perpendicular to roof framing members and parallel to the roof ridge.

Cantilever The unsupported portion of a beam which extends beyond a support.

Ceiling Assembly All structural members and attachments that form a ceiling.

Copyright © American Wood Council. Downloaded/printed pursuant to License Agreement. No reproduction or transfer authorized.

Ceiling Joist A horizontal structural framing member which supports ceiling and/or attic loads.

Cladding Exterior structural elements that receive loads normal to their surface.

Collar Tie A structural framing member located in the upper third of the attic space that ties rafters together to resist roof suction loads at the ridge.

Collector A diaphragm or shear wall boundary element parallel to the applied load that collects and transfers diaphragm shear forces to the vertical force-resisting elements or distributes forces within the diaphragm or shear wall.

Components & Cladding (C&C) Elements that are either directly loaded by the wind or receive wind loads originating at relatively close locations and that transfer these loads to the main wind force resisting system.

Composite Panels A wood structural panel composed of wood veneer and reconstituted wood-based material bonded together with a waterproof adhesive.

Continuous Load Path The interconnection of all framing elements of the lateral and vertical force resisting systems, which transfers lateral and vertical forces to the foundation.

Continuous Span The span made by a structural member between three or more supports.

Cripple Wall A framed wood stud wall extending from the top of the foundation to the underside of the floor framing for the lowest occupied floor level.

Diaphragm A roof, floor, or other membrane bracing system acting to transmit lateral forces to the vertical resisting elements. Where the term "diaphragm" is used, it includes horizontal bracing systems.

Diaphragm Chord A diaphragm boundary element perpendicular to the applied lateral load that resists axial stresses due to the induced moment.

Dual-Slope Roof A roof with two slopes which come together to form a ridge or peak.

Endwall The exterior wall of a building perpendicular to the roof ridge and parallel to roof rafters or trusses.

Fiberboard A fibrous, homogenous panel made from lignocellulosic fibers (usually wood or cane) and having a density of less than 31 pounds per cubic foot but more than 10 pounds per cubic foot.

Floor Assembly All structural members and attachments that form a floor.

Floor Joist A horizontal structural framing member which supports floor loads.

Foundation Wall The vertical structural wall unit attached to the foundation which supports vertical and lateral loads.

Gable The triangular portion of the endwall beneath a dual-slope, pitched, or mono-slope roof.

Glued Laminated Timber Any member comprising an assembly of laminations of lumber in which the grain of all laminations is approximately parallel longitudinally, in which the laminations are bonded with adhesives.

Habitable Attic A finished or unfinished area enclosed by the roof assembly, not considered a story, and meeting all requirements for habitable space in the governing building code.

Header A beam used at wall, floor, and roof openings to carry loads across the opening.

Hip Beam A beam spanning from the ridge to the outside roof corner that supports the jack rafters, forming a convex roof line.

I-joist A structural member manufactured using sawn or structural composite lumber flanges and wood structural panel webs, bonded together with exterior exposure adhesives, forming an "I" cross-sectional shape.

Jack Rafter A rafter that spans from a hip or valley beam to a wall plate or ridge, respectively.

Jack Studs A vertical structural element which does not span the full height of the wall and supports vertical loads.

Laminated Strand Lumber (LSL) A composite of wood strand elements with wood fibers primarily oriented along the length of the member. The least dimension of the strands shall not exceed 0.10″ and the average length shall be a minimum of 150 times the least dimension.

Laminated Veneer Lumber (LVL) A composite of wood veneer elements with wood fibers primarily oriented along the length of the member. Veneer thickness shall not exceed 0.25″.

Loadbearing Cantilever A cantilever which carries vertical loads in addition to its own weight.

Loadbearing Setback The offset of a load bearing wall or load bearing structural unit from a support towards mid-span.

Loadbearing Wall A wall that supports vertical load in addition to it own weight.

Main Wind Force Resisting Systems (MWFRS) An assemblage of major structural elements assigned to provide support for secondary members and cladding. The

Copyright © American Wood Council. Downloaded/printed pursuant to License Agreement. No reproduction or transfer authorized.

system primarily receives wind loading from more than one surface.

Mean Roof Height The distance from average grade to the average roof elevation (see Figure 1.2).

Mono-slope Roof A roof with constant slope in one direction.

Oriented Strand Board (OSB) A mat-formed wood structural panel product composed of thin rectangular wood strands or wafers arranged in oriented layers and bonded with a waterproof adhesive.

Oriented Strand Lumber (OSL) A composite of wood strand elements with wood fibers primarily oriented along the length of the member. The least dimension of the strands shall not exceed 0.10″ and the average length shall be a minimum of 75 times the least dimension.

Parallel Strand Lumber (PSL) A composite of wood veneer strand elements with wood fibers primarily oriented along the length of the member. The least dimension of the strands shall not exceed 0.25″ and the average length shall be a minimum of 300 times the least dimension.

Particleboard A generic term for a panel primarily composed of cellulosic materials (usually wood), generally in the form of discrete pieces or particles, as distinguished from fibers. The cellulosic material is combined with synthetic resin or other suitable bonding system by a process in which the interparticle bond is created by the bonding system under heat and pressure.

Perforated Shear Wall A shear wall with openings in the wall that has not been specifically designed and detailed for force transfer around wall openings, and meets the requirements of 4.3.5.3 in the *Special Design Provisions for Wind & Seismic (SDPWS)* standard.

Perforated Shear Wall Segment A section of a perforated shear wall with full height sheathing that meets the aspect ratio limits of Table 3.17D.

Pitched Roof A roof with one or more sloping surfaces.

Pitched Span Length Distance between supports measured along the slope of the pitched roof member.

Plywood A wood structural panel composed of plies of wood veneer arranged in cross-aligned layers. The plies are bonded with an adhesive that cures on application of heat and pressure.

Rafter A horizontal or sloped structural framing member that supports roof loads.

Rafter Overhang (Eave) The horizontal projection of a rafter measured from the outside face of the wall to the outside edge of the rafter.

Rafter Tie A structural framing member located in the lower third of the attic space that ties rafters together to resist thrust from gravity loads on the roof.

Rake Overhang The horizontal projection of the roof measured from the outside face of the gable endwall to the outside edge of the roof.

Ridge The horizontal line formed by the joining of the top edges of two sloping roof surfaces.

Ridge Beam A structural member used at the ridge of a roof to support the ends of roof rafters and transfer roof loads to supports.

Ridge Board A non-structural member used at the ridge of a roof to provide a common nailing surface and point of bearing for opposing roof rafters.

Ridge Strap A metal connector that fastens opposing rafters together to resist roof suction loads at the ridge.

Risk Category A categorization of buildings and other structures for determination of flood, wind, snow, ice, and earthquake loads based on the risk associated with unacceptable performance.

Roof Assembly All structural members and attachments that form a roof.

Roof Span The distance between the outside of exterior walls supporting the roof/ceiling or truss assembly.

Segmented Shear Wall A shear wall composed of shear wall segments with overturning restraint provided at each end of each shear wall segment.

Seismic Design Category A classification assigned to a structure based on its Risk Category (see building code) and the severity of the design earthquake ground motion at the site.

Setback The net horizontal offset distance of a wall on a floor system, measured from the support towards mid-span of the floor system.

Shear Wall A wall designed to resist lateral forces parallel to the plane of a wall.

Shear Wall, Blocked A shear wall in which all adjacent panel edges are fastened to either common framing members or common blocking.

Shear Wall, Unblocked A shear wall that has fasteners at boundaries and vertical framing members only. Blocking

Copyright © American Wood Council. Downloaded/printed pursuant to License Agreement. No reproduction or transfer authorized.
AMERICAN WOOD COUNCIL

between vertical framing members at adjacent panel edges is not included.

Shear Wall Line A series of shear walls in a line at a given story level. The *WFCM* assumes that shear walls not offset by more than 4 feet horizontally from any other shear wall are considered in the same shear wall line.

Shear Wall Plan Offset The distance from a shear wall to the nearest parallel shear wall.

Shear Wall Segment The vertical section of a shear wall without openings that forms a structural unit composed of sheathing, framing members, and perimeter members which act as a deep, thin vertical cantilever beam designed to resist lateral forces parallel to the plane of the wall, and which meets the aspect ratio limits of Table 3.17D.

Sheathing The structural covering used directly over framing members, such as studs, joists, or rafters, which transfers perpendicular loads to the framing material.

Sidewall The exterior wall of a building parallel to the roof ridge which supports roof rafters or trusses.

Sill Plate A horizontal wood member anchored to the foundation and supporting floor joists.

Single-Family Dwelling A detached building which provides completely independent living facilities for one or more persons including permanent provisions for living, sleeping, eating, cooking, and sanitation.

Single Span The span made by a structural member between two supports.

Slab-On-Grade The concrete slab that serves as the floor for the first story, upon which the first story framed walls are attached.

Span The distance between face of supports, plus 1/2 the required bearing length at each end.

Story The portion of a structure included between the upper surface of a floor and the upper surface of the floor or roof next above.

Structural Composite Lumber (SCL) Structural materials manufactured using wood elements bonded together with exterior adhesives. Examples of Structural Composite Lumber are Laminated Veneer Lumber (LVL), Parallel Strand Lumber (PSL), Laminated Strand Lumber (LSL), and Oriented Strand Lumber (OSL).

Structural Roof/Ceiling Dead Loads The dead load from structural members only, this load does not include roofing materials.

Stud Vertical structural element of wall assemblies which transfers vertical and/or lateral loads.

Tail Joist A joist which is used to frame between an opening header and bearing wall, beam, or another header.

Tail Rafter A rafter which is used to frame between an opening header and bearing wall, beam, or another header.

Three-Second Gust Wind Speed Peak wind speed at a given height and exposure averaged over 3 seconds (mph).

Tie-Down (Hold-down) A connector device used to provide overturning restraint by resisting uplift of the chords of shear walls.

Top Plate(s) A horizontal wood member(s) attached to the top of a frame wall and supporting trusses, rafters, roof joists, floor joists, ceiling joists, or other members.

Trimmer A vertical stud or horizontal beam or joist to which a header is nailed in framing a chimney, stairway, or other opening.

Truss An engineered structural component, assembled from wood members, metal connector plates or other mechanical fasteners, designed to carry its own weight and superimposed design loads. The truss members form a semi-rigid structural framework and are assembled such that the members form triangles. Variations include metal web trusses, metal tube trusses, and plywood gusset trusses.

Twisting Moment The moment causing rotation about the longitudinal axis of a member.

Two-Family Dwelling A detached building which provides two completely independent living facilities for one or more persons including permanent provisions for living, sleeping, eating, cooking, and sanitation.

Valley Beam A beam spanning from the ridge to an inside roof corner, that supports the jack rafters, forming a concave roof line.

Vertical Floor Offset The distance between two adjoining floor assemblies which do not lie in the same horizontal plane.

Wall Assembly All structural members and attachments that form a wall.

Wind Exposure

> **Exposure B** Urban and suburban areas, wooded areas, or other terrain with numerous closely spaced obstructions having the size of single family dwellings or larger. Exposure B shall be assumed unless the site meets the definition of another type exposure.

Copyright © American Wood Council. Downloaded/printed pursuant to License Agreement. No reproduction or transfer authorized.
AMERICAN WOOD COUNCIL

Exposure C Open terrain with scattered obstructions including surface undulations or other irregularities having heights generally less than 30 feet extending more than 1500 feet from the building site in any full quadrant. Exposure C applies in Exposure B type terrain where open areas of Exposure C type terrain are directly adjacent to the dwelling for a distance of more than 600 feet. This category includes open country and grasslands, and open water exposure of less than 1 mile.

Exposure D Flat unobstructed areas exposed to wind flowing over open water, smooth mud flats, salt flats and unbroken ice for a distance of at least 1 mile. This exposure shall apply only to those buildings and other structures exposed to the wind coming from over the unobstructed area. Exposure D extends inland from the edge of the unobstructed area a distance of 600 feet or 20 times the height of the building or structure, whichever is greater.

Window Sill Plate A horizontal framing member below an opening.

Wood Structural Panel A panel manufactured from veneers; or wood strands or wafers; or a combination of veneer and wood strands or wafers; bonded together with waterproof synthetic resins or other suitable bonding systems. Examples of wood structural panels are plywood, oriented strand board (OSB), or composite panels.

1.4 Symbols

A = area of cross section, in.^{2}

A_b = bearing area, in.^{2}

B = width of building (perpendicular to ridge) or roof span, ft

C = compression force in end member of shear wall segment, lbs

DL = dead load, psf

E, E' = tabulated and allowable modulus of elasticity, psi

E = nail spacing at panel edges, in.

F = nail spacing at intermediate supports in the panel field, in.

F_b, F'_b = tabulated and allowable bending design value, psi

F_c, F'_c = tabulated and allowable compression design value parallel to grain, psi

$F_{c\perp}, F'_{c\perp}$ = tabulated and allowable compression design value perpendicular to grain, psi

F_t, F'_t = tabulated and allowable tension design value parallel to grain, psi

F_v, F'_v = tabulated and allowable shear design value parallel to grain (horizontal shear), psi

G = specific gravity

GSL = ground snow load, psf

H = story wall height, ft

H_C = ceiling height in attic space (measured from top plate) , ft

H_R = top plate-to-roof ridge height, ft

I = moment of inertia, in.^{4}

L = length of span of bending member, length of building (parallel to ridge), length of full height shear wall segment, length of outlooker, ft

L = connector lateral load (perpendicular to the wall), plf

L_{MAX} = length of longest building dimension, ft

L_{MIN} = length of shortest building dimension, ft

L_1 = floor and roof diaphragm width, ft

L_2 = floor and roof diaphragm length, ft

LL = live load, psf

M = maximum bending moment, in.-lbs

M' = maximum capacity, in.-lbs

NFH = number of full-height studs

OH = overhang length, ft

O_1 = floor opening width, ft

O_2 = floor opening length, ft

R = L/W for wind perpendicular to the ridge and W/L for wind parallel to the ridge, where W is the building width and L is the building length.

R = Response modification factor for seismic design

R_W = adjustment factor for wall assembly dead loads less than the assumed load.

R_1 = adjustment factor for additional roof assembly dead loads greater than the assumed load (1 story)

R_2 = adjustment factor for additional roof and floor assembly dead loads greater than the assumed load (2 story)

R_3 = adjustment factor for additional roof and floor assembly dead loads greater than the assumed

Copyright © American Wood Council. Downloaded/printed pursuant to License Agreement. No reproduction or transfer authorized.

load (3 story)

RLL = roof live load, psf

S = Connector shear load (parallel to the wall), plf

S_{DS} = design, 5 percent damped, spectral response acceleration parameter at short periods

T = tension force in end member of shear wall segment, required hold-down capacity, ridge connection load, heel joint thrust load, lbs

T_{req} = actual thrust connection load, lbs

$T_{tabulated}$ = tabulated thrust connection load, lbs

U = Connector uplift load, plf

V = total design lateral force or shear (seismic), lbs

V' = shear capacity, lbs

V_{FD1} = shear load for seismic at floor diaphragm 1 level, lbs

V_{FD2} = shear load for seismic at floor diaphragm 2 level, lbs

V_{FD3} = shear load for seismic at floor diaphragm 3 level, lbs

$V_{floor(1)}$ = required total shear capacity of the 1st floor diaphragm, lbs

$V_{floor(2)}$ = required total shear capacity of the 2nd floor diaphragm, lbs

V_{RD} = shear load for seismic at roof/ceiling diaphragm level, lbs

$V_{roof/ceiling}$ = required total shear capacity of the roof/ceiling diaphragm, lbs

V_{wall} = required total shear capacity of a shear wall, lbs

W = width of building (perpendicular to ridge), ft

W_{FD1} = effective seismic weight tributary to floor diaphragm 1 level, lbs

W_{FD2} = effective seismic weight tributary to floor diaphragm 2 level, lbs

W_{FD3} = effective seismic weight tributary to floor diaphragm 3 level, lbs

$W_{floor\ 1}$ = floor assembly dead load for 1st floor, lbs

$W_{floor\ 2}$ = floor assembly dead load for 2nd floor, lbs

$W_{floor\ 3}$ = floor assembly dead load for 3rd floor, lbs

W_{gable} = gable wall assembly dead load, lbs

$W_{partition}$ = partition wall assembly dead load, lbs

W_{RD} = effective seismic weight tributary to the roof diaphragm level, lbs

W_{roof} = roof and ceiling assembly dead load, lbs

W_{wall} = exterior wall assembly dead load, lbs

Z = 10% of minimum building dimension, but not less than 3 feet, ft

b = bearing length of joist, breadth of rectangular bending member, in.

d = depth of rectangular bending member, in.

d_f = depth of floor member (including floor framing members and roof sheathing), in.

h = height of shear wall segment, ft

h_R = vertical roof height dimension used to calculate average roof elevation, ft

h_{fdn} = height of the top of the foundation, ft

h_{FD1} = height measured from the floor level to the top of the foundation (1st story of 2 story building, 2nd story of a 3 story building), ft

h_{FD2} = height measured from the floor level to the top of the foundation (1st story of a 3 story building), ft

h_{RD} = height measured from the eave to the top of the foundation, ft

f_b = actual bending stress, psi

f_c = actual compression stress parallel to grain, psi

$f_{c\perp}$ = actual compression stress perpendicular to grain, psi

t = thickness of joist, in.

v_{floor} = required unit shear capacity of a floor diaphragm, plf

v_{roof} = required unit shear capacity of a roof diaphragm, plf

v_{wall} = required unit shear capacity of a shear wall, plf

w = unit lateral load, plf

$w_{floor\parallel}$ = unit lateral floor diaphragm wind load parallel to ridge, plf

$w_{floor\perp}$ = unit lateral floor diaphragm wind load perpendicular to ridge, plf

$w_{roof\parallel}$ = unit lateral roof diaphragm wind load parallel to ridge, plf

$w_{roof\perp}$ = unit lateral roof diaphragm wind load perpendicular to ridge, plf

Copyright © American Wood Council. Downloaded/printed pursuant to License Agreement. No reproduction or transfer authorized.

Figure 1.1 Basic Wind Speeds for One- and Two-Family Dwellings Based on 3-second Gust Basic Wind Speeds for Risk Category II Buildings

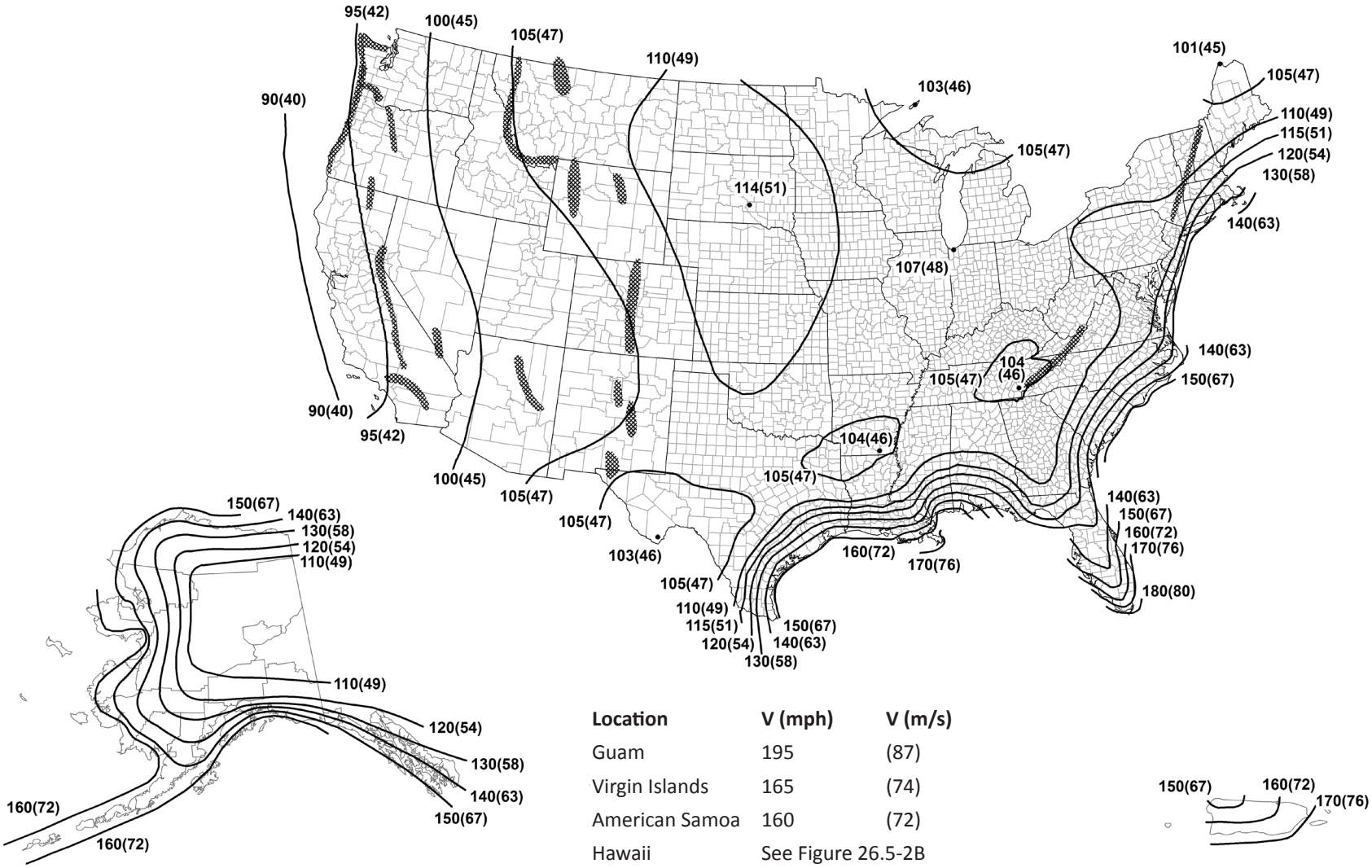

Location	V (mph)	V (m/s)
Guam	195	(87)
Virgin Islands	165	(74)
American Samoa	160	(72)
Hawaii	See Figure 26.5-2B	

Notes: Dark shading indicates a Special Wind Region.

1. Values are nominal design 3-s gust wind speeds in miles per hour (m/s) at 33 ft (10 m) above ground for Exposure Category C.
2. Linear interpolation is permitted between contours. Point values are provided to aid with interpolation.
3. Islands, coastal areas, and land boundaries outside the last contour shall use the last wind speed contour.
4. Mountainous terrain, gorges, ocean promontories, and special wind regions shall be examined for unusual wind conditions.
5. Wind speeds correspond to approximately a 7% probability of exceedance in 50 years (Annual Exceedance Probability = 0.00143, MRI = 700 years).
6. Location-specific basic wind speeds shall be permitted to be determined using www.atcouncil.org/windspeed.

ASCE 7-16 Figure 26.5-1B Basic Wind Speeds for Risk Category II Buildings and Other Structures

(with permission from ASCE)

Copyright © American Wood Council. Downloaded/printed pursuant to License Agreement. No reproduction or transfer authorized.

Figure 1.2 Mean Roof Height (MRH)

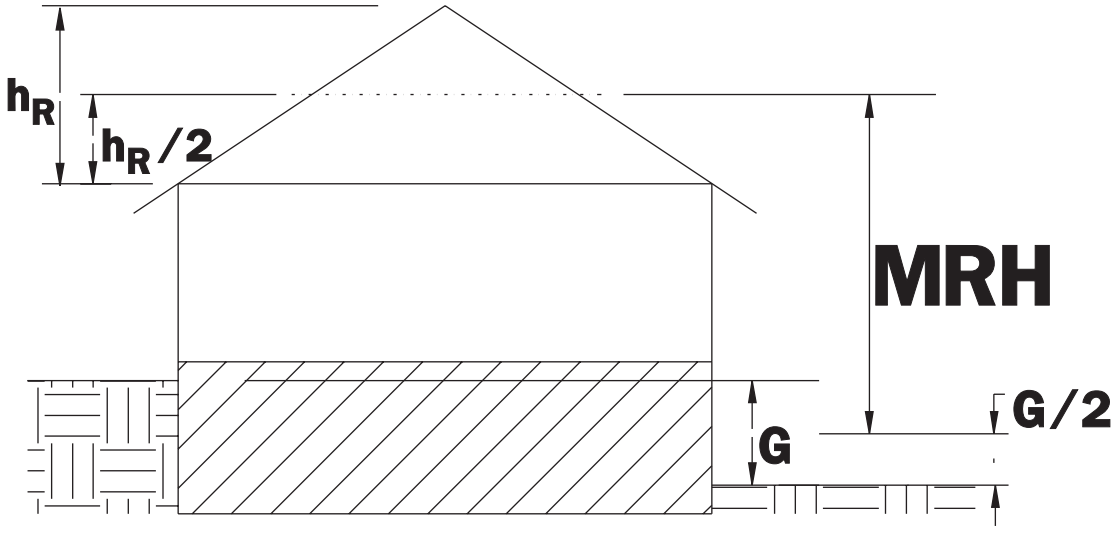

Copyright © American Wood Council. Downloaded/printed pursuant to License Agreement. No reproduction or transfer authorized.

2

ENGINEERED DESIGN

2.1	General Provisions	15
2.2	Connections	17
2.3	Floor Systems	19
2.4	Wall Systems	21
2.5	Roof Systems	23
List of Figures		26
List of Tables		61

Copyright © American Wood Council. Downloaded/printed pursuant to License Agreement. No reproduction or transfer authorized.
AMERICAN WOOD COUNCIL

Table 2 Engineered Design Limitations

	Attribute	Limitation	Reference Section	Figures
BUILDING DIMENSIONS				
Building	**Mean Roof Height (MRH)**	33'	2.1.3.1	1.2
	Number of Stories	3	1.1.3.1a	-
	Building Length and Width	80'	1.1.3.1b	-
FLOOR SYSTEMS				
Lumber Joists	**Joist Span**	26'	2.1.3.2a	-
	Joist Spacing	24" o.c.	2.1.3.2b	-
	Cantilevers - Supporting loadbearing	d	2.1.3.2c	2.1a
	Setbacks - Loadbearing walls[1]	d	2.1.3.2d	2.1d
Wood I-Joists	**I-Joist Span**	26'	2.1.3.2a	-
	I-Joist Spacing	24" o.c.	2.1.3.2b	-
	Cantilevers	(see manufacturer)	2.3.2.6	2.4e, 2.9a, 2.9b
	Setbacks	(see manufacturer)	2.3.2.5	2.4d
Wood Floor Trusses	**Truss Span**	26'	2.1.3.2a	-
	Truss Spacing	24" o.c.	2.1.3.2b	-
	Cantilevers	(see truss plans)	2.3.3.6	2.13a, 2.13b
	Setbacks	(see truss plans)	2.3.3.5	-
Floor Diaphragms	**Vertical Floor Offset[1]**	d_f	2.1.3.2e	2.1i
	Floor Diaphragm Aspect Ratio[1]	4:1	2.1.3.2f	2.1j
	Floor Diaphragm Openings	Lesser of 12' or 50% of Building Dimension	2.1.3.2g	2.1k
WALL SYSTEMS				
Wall Studs	**Loadbearing Wall Height**	20'	2.1.3.3a	-
	Non-Loadbearing Wall Height	20'	2.1.3.3a	-
	Wall Stud Spacing	24" o.c.	2.1.3.3b	-
Shear Walls	**Shear Wall Line Offset[1]**	4'	2.1.3.3c	2.1ℓ
	Shear Wall Story Offset[1]	No offset unless per Exception	2.1.3.3d	
	Shear Wall Segment Aspect Ratio	(see *SDPWS*)	2.1.3.3e	
ROOF SYSTEMS				
Lumber Rafters	**Rafter Span (Horizontal Projection)[2]**	26'	2.1.3.4a	-
	Rafter Spacing	24" o.c.	2.1.3.4b	-
	Eave Overhang Length	Lesser of 2' or rafter span/3	2.5.1.1.2	2.1f
	Roof Slope	1.5:12 - 12:12	2.1.3.4d	-
Wood I-Joist Roof System	**I-Joist Span**	26'	2.1.3.4a	-
	I-Joist Spacing	24" o.c.	2.1.3.4b	-
	Eave Overhang Length	(see manufacturer)	2.5.2.1.2	-
	Roof Slope	1.5:12 - 12:12	2.1.3.4d	-
Wood Roof Trusses	**Truss Span**	60'	2.1.3.4a	-
	Truss Spacing	24" o.c.	2.1.3.4b	-
	Eave Overhang Length	(see truss plans)	2.5.3.1	-
	Roof Slope	1.5:12 - 12:12	2.1.3.4d	-
Rakes	**Overhang Length[1]**	Lesser of 2' or outlooker length/2	2.1.3.4c	2.1g
Roof Diaphragms	**Roof Diaphragm Aspect Ratio[1]**	4:1	2.1.3.4e	2.1j

[1] See exceptions.

[2] For roof snow loads, tabulated spans are limited to 20 ft.

Copyright © American Wood Council. Downloaded/printed pursuant to License Agreement. No reproduction or transfer authorized.

2.1 General Provisions

2.1.1 Engineered Requirements

The provisions of this Chapter provide minimum loads for the purpose of establishing specific resistance requirements for buildings within the scope of this document. This Chapter includes the results of engineering calculations for specific structural elements, in specific configurations, under specific loads. The tabulated information does not represent a complete engineering analysis as would be performed by a registered professional engineer, but is expected to result in significant time-savings for the design professional.

2.1.2 Continuous Load Path

A continuous load path shall be provided to transfer all lateral and vertical loads from the roof, wall, and floor systems to the foundation.

2.1.3 Engineered Design Limitations

Wood-frame buildings built in accordance with this document shall be limited to the conditions of this section (see Table 2). Structural conditions not complying with this section shall be designed in accordance with accepted engineering practice.

2.1.3.1 Adjustment for Wind Exposure and Mean Roof Height

Tabulated wind requirements in this chapter are based on wind exposure category B and a mean roof height of 33 feet. The building shall neither exceed three stories nor a mean roof height of 33 feet, measured from average grade to average roof elevation (see Figure 1.2). Additional loads from habitable attics shall be considered for purposes of determining gravity and seismic loads. For buildings sited in exposure category B, wind-related tabulated values are permitted to be multiplied by the specific adjustments as provided per Table 2.1.3.1. For buildings sited in exposure category C or D, wind-related tabulated values shall be increased per Table 2.1.3.1 in accordance with specific adjustments as provided in footnotes to applicable tables.

Table 2.1.3.1 Adjustment for Wind Exposure and Mean Roof Height

Mean Roof Height (feet)	Exposure B MWFRS	Exposure B C&C	Exposure C MWFRS and C&C	Exposure D MWFRS and C&C
0-15	0.97	0.79	1.18	1.43
20	0.97	0.86	1.25	1.50
25	0.97	0.92	1.31	1.56
30	0.97	0.97	1.36	1.61
33	1.00	1.00	1.39	1.64

2.1.3.2 Floor Systems

a. Framing Member Spans Single spans of floor framing members shall not exceed 26 feet for lumber joists, I-joists, and floor trusses. Design spans shall consider both strength and serviceability limits. For serviceability, the computed joist deflection under live load shall not exceed L/360 (span divided by 360) or more stringent criteria as specified by the manufacturer.

b. Framing Member Spacings Floor framing member spacings shall not exceed 24 inches on center for lumber joists, I-joists, and floor trusses.

c. Cantilevers Lumber floor joist cantilevers supporting loadbearing walls shall not exceed the depth, d, of the joists (see Figure 2.1a). Lumber floor joist cantilevers supporting non-loadbearing walls shall be limited to L/4 (see Figure 2.1b). I-joist cantilevers shall be in accordance with the manufacturer's code evaluation report. Truss cantilevers shall be in accordance with the truss design/placement plans. Lumber joists, I-joists, and trusses shall be located directly over studs when used in cantilever conditions, unless the top plate is designed to carry the load.

> **EXCEPTION:** Lumber floor joist cantilevers supporting loadbearing walls shall be permitted to exceed these limits when designed for the additional loading requirements, but in no case shall they exceed four times the depth (4d) of the member (see Figure 2.1c).

d. Setbacks Setbacks of loadbearing walls on lumber floor joist systems shall not exceed the depth, d, of the joists (see Figure 2.1d). Setbacks on I-joists shall be in accordance with the manufacturer's code evaluation report. Setbacks on floor trusses shall be in accordance with the truss design/placement plans. Lumber joists, I-joists, and trusses shall be located directly over studs when used in setback conditions supporting loadbearing walls, unless the top plate is designed to carry the load.

> **EXCEPTION:** Lumber floor joist setbacks supporting loadbearing walls shall be permitted

Copyright © American Wood Council. Downloaded/printed pursuant to License Agreement. No reproduction or transfer authorized.

to exceed these limits when designed for the additional loading requirements, but in no case shall they exceed four times the depth (4d) of the member (see Figure 2.1e).

e. Vertical Floor Offsets Vertical floor offsets shall be limited to the floor depth, d_f (including floor framing members and floor sheathing), and the floor framing members on each side of the offset shall be lapped or tied together to provide a direct tension tie across the offset, and to transfer diaphragm shear in both orthogonal directions (see Figure 2.1i).

EXCEPTION: Where floor offsets are not tied together, the structure shall be considered as separate structures attached in the plane of the offset.

f. Diaphragm Aspect Ratio Floor diaphragm aspect ratios shall not exceed 4:1 (see Figure 2.1j).

g. Diaphragm Openings Floor diaphragm openings shall not exceed the lesser of 12 feet or 50% of the building dimension (see Figure 2.1k).

2.1.3.3 Wall Systems

a. Wall Heights The slenderness ratio for studs, ℓ_e/d, shall not exceed 50, except that during construction ℓ_e/d shall not exceed 75. Loadbearing and non-loadbearing walls shall not exceed 20 feet in height.

b. Wall Stud Spacings Wall stud spacings shall not exceed 24 inches on center.

c. Shear Wall Line Offsets Offsets in a shear wall line within a story shall not exceed 4 feet (see Figure 2.1ℓ).

EXCEPTION: Where shear walls are discontinuous or shear wall line offsets exceed these limits, continuity of the shear wall and diaphragm load path to the resisting elements shall be designed and detailed in accordance with the governing building code.

d. Shear Wall Story Offsets Upper story shear wall segments shall not be offset in-plane or out-of-plane from lower story shear wall segments.

EXCEPTION: Shear wall segments shall be permitted to be offset in-plane or out-of-plane from the story below when continuity of the load path to the resisting elements is designed and detailed in accordance with the governing building code.

e. Shear Wall Aspect Ratio Shear wall aspect ratios shall be in accordance with *SDPWS*.

f. Shear Wall Orientation Shear wall lines shall be oriented to resist loads in two orthogonal directions.

g. Load Transfer Band joists at ends of members, blocking between members, or other methods to transfer roof, wall, and/or floor loads from upper stories shall be installed (see Figures 2.4a-e, 2.5a-b, 2.9a-b, 2.12a, 2.15a-b, 3.4d, 3.5a).

2.1.3.4 Roof Systems

a. Framing Spans Single spans (horizontal projection) of roof framing members shall not exceed 26 feet for lumber rafters and I-joists, and 60 feet for roof trusses.

b. Framing Spacings Roof framing member spacings shall not exceed 24 inches on center for lumber rafters, I-joists, and roof trusses.

c. Overhang Lengths Rafter overhang lengths shall not exceed one-third of the rafter span or 2 feet, whichever is less (see Figure 2.1f). Rake overhangs shall not exceed the lesser of one-half of the outlooker length or 2 feet (see Figure 2.1g).

EXCEPTION: Rake overhangs using lookout blocks shall not exceed 9 inches (see Figure 2.1h).

d. Slope Roof slope shall not exceed 12:12.

e. Diaphragm Aspect Ratio Roof diaphragm aspect ratios shall not exceed 4:1 (see Figure 2.1j).

2.1.4 Interpolation

Tabulated values in this Chapter shall be permitted to be interpolated unless otherwise noted in the applicable table footnotes.

2.1.5 Design Values

2.1.5.1 Sawn Lumber

Design of visually-graded and mechanically-graded dimension lumber shall be in accordance with the *National Design Specification® (NDS®) for Wood Construction*. Reference design values are provided in the *NDS Supplement* Tables 4A-F. Section properties are provided in *NDS Supplement* Tables 1A-B.

2.1.5.2 Structural Glued Laminated Timber

Design of softwood and hardwood structural glued laminated timber shall be in accordance with the *NDS*. Reference design values are provided in *NDS Supplement* Tables 5A-D. Section properties are provided in *NDS Supplement* Tables 1C-D.

2.1.5.3 Structural Composite Lumber

Design of structural composite lumber shall be in accordance with the *NDS*.

2.1.5.4 Floor and Roof Diaphragm Assemblies

Design of horizontal diaphragm assemblies shall be

Copyright © American Wood Council. Downloaded/printed pursuant to License Agreement. No reproduction or transfer authorized.

in accordance with the *SDPWS*.

a. Maximum spans and allowable total uniform loads for floor sheathing are specified in Table S-1 of the *WFCM Supplement*.

b. Allowable stress design (ASD) allowable uniform load capacities for wind design shall be determined from *SDPWS* Section 3.2.3 for roof sheathing by dividing the tabulated nominal uniform load capacities in Table 3.2.2 of *SDPWS* by an ASD reduction factor of 1.6, modified by applicable footnotes in *SDPWS*. Maximum spans and allowable total uniform loads for roof live and snow loads for roof sheathing are specified in Table S-2 of the *WFCM Supplement*.

c. ASD allowable unit shear capacities for horizontal diaphragm assemblies are determined from *SDPWS* Section 4.2 by dividing the tabulated nominal unit shear capacities in Tables 4.2A, B, and C of *SDPWS* by an ASD reduction factor of 2.0, modified by applicable footnotes in *SDPWS*.

d. For horizontal diaphragm assemblies sheathed with gypsum wallboard, the allowable unit shear capacity is specified in *WFCM Supplement* Table S-3.

2.1.5.5 Wall Assemblies

Design of vertical wall assemblies shall be in accordance with the *NDS* and *SDPWS*.

a. ASD allowable uniform load capacities for wall sheathing resisting out-of-plane wind loads shall be determined from *SDPWS* Section 3.2.1 by dividing the tabulated nominal uniform load capacities in Table 3.2.1 of *SDPWS* by an ASD reduction factor of 1.6, modified by applicable footnotes in *SDPWS*.

b. ASD allowable unit shear capacities for shear wall assemblies are determined from *SDPWS* Section 4.3 by dividing the tabulated nominal unit shear capacities in Tables 4.3A, B, and C of *SDPWS* by an ASD reduction factor of 2.0, modified by applicable footnotes in *SDPWS*.

2.1.5.6 Fasteners

Design of fasteners shall be in accordance with the *NDS*. Reference lateral design values for common, box, sinker, or roof sheathing ring shank (RSRS) steel wire nails are specified in *NDS* Tables 12N, P, Q, and R. Reference withdrawal design values for smooth shank (bright or galvanized) carbon steel nails are specified in *NDS* Table 12.2C. Reference withdrawal design values for smooth shank stainless steel nails are specified in *NDS* Table 12.2D. Reference withdrawal design values for roof sheathing ring shank nails (RSRS) are specified in *NDS* Table 12.2E. Reference pull-through design values for round head fasteners are specified in *NDS* Table 12.2F.

2.2 Connections

2.2.1 Lateral Framing Connections

Adequate connections between roof, ceiling, wall, and floor assemblies shall be provided to transfer lateral forces acting perpendicular to the wall surface (see Figure 2.2a).

2.2.1.1 Wall Assembly to Roof, Ceiling, or Floor Assembly

Framing connections to transfer lateral loads from the wall framing into the roof, ceiling, or floor diaphragm assembly shall be in accordance with the lateral loads specified in Table 2.1.

2.2.1.2 Foundation Wall to Floor Assembly

Framing connections to transfer lateral loads from the foundation wall into the floor diaphragm assembly shall be in accordance with the foundation design.

2.2.2 Shear Connections

Adequate connections between roof, ceiling, wall, and floor assemblies shall be provided to transfer shear forces acting parallel to the wall surface (see Figure 2.2b).

2.2.2.1 Roof, Ceiling, or Floor Assembly to Wall Assembly

Connections to transfer shear loads from the roof, ceiling, or floor diaphragm assembly to the shear wall segments shall be in accordance with the shear loads calculated using Tables 2.5A and 2.5B for wind perpendicular and parallel to ridge respectively, or using Table 2.6 for seismic motion.

2.2.2.2 Wall Assembly to Wall Assembly

Connections to transfer shear loads from a shear wall segment above to a shear wall segment below shall be in accordance with the shear loads calculated using Tables 2.5A and 2.5B for wind perpendicular and parallel to ridge respectively, or using Table 2.6 for seismic motion.

2.2.2.3 Floor Assembly to Foundation

Connections to transfer shear loads from the floor assembly to the foundation shall be in accordance with the shear loads using Tables 2.5A and 2.5B for wind perpendicular and parallel to ridge respectively, or using Table 2.6 for seismic motion.

Copyright © American Wood Council. Downloaded/printed pursuant to License Agreement. No reproduction or transfer authorized.
AMERICAN WOOD COUNCIL

2.2.2.4 Wall Assembly to Foundation

Connections to transfer shear loads from the wall assembly to the foundation shall be in accordance with the shear loads calculated using Tables 2.5A and 2.5B for wind perpendicular and parallel to ridge respectively, or using Table 2.6 for seismic motion.

2.2.3 Wind Uplift Connections

Adequate connections shall be provided to transfer uplift forces acting away from the roof surface(s) (see Figure 2.2c).

2.2.3.1 Roof Assembly to Foundation

Connections to transfer uplift loads from the roof assembly to the foundation shall be in accordance with the uplift loads specified in Table 2.2A. A continuous load path shall be maintained with either a continuous connector from the roof to the foundation or with a series of connections creating a complete load path.

2.2.4 Overturning Resistance

Resistance to shear wall overturning shall be provided (see Figure 2.2d). The resisting dead load moment shall be calculated using no more than 60% of the design dead load.

2.2.4.1 Hold-downs

Hold-downs to provide overturning restraint to shear wall segments at each level shall be provided at the ends of shear walls and as required to develop the shear capacity of the wall segments in accordance with 2.4.4.2. A continuous load path from the hold-down to the foundation shall be maintained. Where a hold-down resists the overturning load from the story or stories above, the hold-down shall be sized for the required hold-down tension capacity at its level plus the required hold-down tension capacity of the story or stories above. Hold-downs used to resist both uplift and overturning shall be designed to resist the sum of the forces determined in accordance with 2.2.3 and 2.2.4.

2.2.5 Sheathing and Cladding Attachment

Adequate attachment of sheathing and cladding shall be provided to assure the transfer of specified loads into framing members.

2.2.5.1 Roof Sheathing

Roof sheathing shall be attached to roof structural members to resist the withdrawal loads (suction) specified in Table 2.4 and provide the roof diaphragm shear capacity required in 2.5.4.2.

2.2.5.2 Wall Sheathing

Wall sheathing shall be attached to wall structural members to resist the withdrawal loads (suction) specified in Table 2.4 and provide the shear wall capacity required in 2.4.4.2.

2.2.5.3 Floor Sheathing

Sheathing shall be attached to provide the floor diaphragm shear capacity required in 2.3.4.2.

2.2.6 Special Connections

2.2.6.1 Ridge Connections

Connection loads at the roof ridge shall be in accordance with the loads specified in Table 2.2B.

2.2.6.2 Jack Rafters

Connection of the jack rafter to the wall shall be in accordance with 2.2.3.1. Connection of the jack rafter to hip beam shall be in accordance with the loads specified in Table 2.2B.

2.2.6.3 Hip and Valley Beams

Hip and valley beams do not require special uplift connections when jack rafters are attached in accordance with 2.2.6.2.

2.2.6.4 Hip Trusses

Gravity and uplift loads at the hip truss to girder truss connection shall be in accordance with the loads specified in the truss design drawings.

2.2.6.5 Non-Loadbearing Exterior Wall Assemblies

Walls which support rake overhang outlookers or lookout blocks shall be connected to the foundation in accordance with the uplift loads specified in Table 2.2C (see Figure 2.1g and 2.1h). Walls which do not support the roof assembly need only resist an uplift load of 60 plf.

2.2.6.6 Wall Openings

Connections to transfer lateral, shear, and uplift loads around wall openings shall be in accordance with the loads specified in 2.2.1.1, 2.2.2, and 2.2.3.1 for loadbearing walls or 2.2.1.1, 2.2.2, and 2.2.6.5 for non-loadbearing walls. A continuous load path shall be maintained around the opening and to the foundation.

2.2.6.7 Thrust Connection

Connection to transfer thrust loads in the lower third of the attic space shall be in accordance with the thrust loads specified in Table 2.3.

2.2.6.8 Rake Overhang Outlookers

Rake overhang outlookers shall be connected to the gable endwall in accordance with the wind uplift loads specified in Table 2.2C (see Figure 2.1g). The outlooker,

Copyright © American Wood Council. Downloaded/printed pursuant to License Agreement. No reproduction or transfer authorized.
AMERICAN WOOD COUNCIL

including bearing at the outlooker and gable end wall, and the connection between the outlooker and the first interior truss shall be designed to resist gravity loads.

2.3 Floor Systems

2.3.1 Lumber Joist Systems

2.3.1.1 Floor Joists

Single and continuous span floor joists shall be in accordance with the design property requirements of Tables 2.7A-B.

2.3.1.1.1 Notching and Boring Notches in the top or bottom edge of joists shall not be located in the middle one-third of the joist span. Notches in the outer thirds of the span shall not exceed one-sixth of the actual joist depth and shall not be longer than one-third of the depth of the member. Where notches are made at the supports, they shall not exceed one-fourth the actual joist depth. Holes are limited in diameter to one-third the actual joist depth and the edge of the hole shall not be closer than 2 inches to the top or bottom edge of the joist. Bored holes shall not be located closer than 2 inches to a notch (see Figure 3.3a).

2.3.1.2 Bearing

Joists shall bear directly on beams, girders, ledgers, or loadbearing walls or be supported by hangers or framing anchors. Joist bearing shall be in accordance with the requirements of Table 2.7C.

2.3.1.3 End Restraint

Restraint against twisting shall be provided at the end of each joist by fastening to a full-height rim, band joist, header, or other member or by using blocking between floor joist ends. Fasteners for end restraint shall be capable of resisting a 300 inch-pound twisting moment.

2.3.1.4 Lateral Stability

The following rules shall be applied to provide lateral restraint to prevent rotation or lateral displacement. If the ratio of depth to breadth, d/b, based on nominal dimensions is:

a. $d/b \leq 2$; no lateral support shall be required.

b. $2 < d/b \leq 4$; the ends shall be held in position, as by full depth solid blocking, bridging, hangers, nailing or bolting to other framing members, or other acceptable means.

c. $4 < d/b \leq 5$; the compression edge of the member shall be held in line for its entire length to prevent lateral displacement, as by adequate sheathing or subflooring, and ends at point of bearing shall be held in position to prevent rotation and/or lateral displacement.

d. $5 < d/b \leq 6$; bridging, full depth solid blocking or diagonal cross bracing shall be installed at intervals not exceeding 8 feet, the compression edge of the member shall be held in line as by adequate sheathing or subflooring, and ends at points of bearing shall be held in position to prevent rotation and/or lateral displacement.

e. $6 < d/b \leq 7$; both edges of the member shall be held in line for their entire length and ends at points of bearing shall be held in position to prevent rotation and/or lateral displacement.

If a bending member is subjected to both flexure and axial compression, the depth to breadth ratio shall be permitted to be as much as 5 to 1 if one edge is firmly held in line. If under all combinations of load, the unbraced edge of the member is in tension, the depth to breadth ratio shall be permitted to be no more than 6 to 1.

2.3.1.5 Single or Continuous Floor Joists

2.3.1.5.1 Single or Continuous Floor Joists Supporting Loadbearing Walls Loadbearing walls parallel to joists shall be supported directly by beams, girders, or other loadbearing walls. Loadbearing walls perpendicular to joists shall not be offset from supporting girders, beams, or other loadbearing walls by more than the depth of the joists (see Figure 2.1d), unless the floor joists are designed to carry the additional gravity load specified in Table 2.11 (see Figure 2.1e). Joists shall be located directly over studs when used in setback conditions supporting loadbearing walls, unless the wall top plates are designed to carry loads from above (see Figure 2.1d).

2.3.1.5.2 Single or Continuous Floor Joists Supporting Non-Loadbearing Walls Where non-loadbearing walls are parallel to floor joists, the joist supporting the non-loadbearing wall shall be designed to carry the additional weight of the wall.

2.3.1.6 Cantilevered Floor Joists

2.3.1.6.1 Cantilevered Floor Joists Supporting Loadbearing Walls Overhang lengths of cantilevered floor joists supporting a loadbearing wall at the end of the cantilever shall be limited to the depth of the joists (Figure 2.1a), unless the joists are designed for the cantilevered condition with the additional floor load of the cantilevered area and the gravity load of the exterior loadbearing wall

Copyright © American Wood Council. Downloaded/printed pursuant to License Agreement. No reproduction or transfer authorized.
AMERICAN WOOD COUNCIL

specified in Table 2.11 (see Figure 2.1c). Joists shall be located directly over studs when used in cantilever conditions supporting loadbearing walls (see Figure 2.1a).

2.3.1.6.2 Cantilevered Floor Joists Supporting Non-Loadbearing Walls Overhang lengths of cantilevered floor joists supporting floor loads and a non-loadbearing wall at the end of the cantilever shall not exceed one-fourth of the joist span (Figure 2.1b), unless such joists are designed for the cantilevered condition with the additional floor load of the cantilevered area and weight of the wall.

2.3.1.7 Floor Openings

Framing around floor openings shall be designed to transfer loads to adjacent framing members that are designed to support the additional concentrated loads. Fasteners, connections, and stiffeners shall be designed for the loading conditions. Where the opening is less than 2 feet from an exterior wall, the exterior wall adjacent to the opening shall be framed using full height studs, or a beam shall be designed to resist gravity, lateral, and uplift loads at that location.

2.3.2 Wood I-Joist Systems

2.3.2.1 I-Joists

I-joist floor systems shall be in accordance with this section, the governing building code, and any additional requirements as set forth in the manufacturer's code evaluation report. Single and continuous span I-joists shall be in accordance with the capacity requirements of Tables 2.8A-B.

2.3.2.1.1 Notching and Boring Notching or boring of I-joist flanges shall not be permitted. Holes in I-joist webs shall be in accordance with 2.3.2.1.

2.3.2.2 Bearing

I-joists shall bear directly on beams, girders, ledgers, or loadbearing walls or be supported by hangers (see Figures 2.4a-c, 2.5a-c, and 2.7). Required I-joist bearing capacity shall be in accordance with 2.3.2.1.

2.3.2.3 End Restraint

Restraint against twisting shall be provided at the end of each I-joist by fastening to a full-height rim, band joist, header, or other member or by using blocking panels between floor I-joists (see Figures 2.4a-c). Framing details for end restraint shall be in accordance with 2.3.2.1.

2.3.2.4 Bridging and Web Stiffeners

Where required by the manufacturer, bridging and web stiffeners (see Figure 2.8) shall be installed in accordance with 2.3.2.1.

2.3.2.5 Single or Continuous I-Joists

2.3.2.5.1 Single or Continuous I-Joists Supporting Loadbearing Walls Loadbearing walls parallel to I-joists shall be supported directly on beams, girders, or other loadbearing walls. Loadbearing walls perpendicular to I-joists shall not be offset from supporting girders, beams, or other loadbearing walls unless the I-joists are designed to carry the additional gravity load specified in Table 2.11 (see Figure 2.4c).

2.3.2.5.2 Single or Continuous I-Joists Supporting Non-Loadbearing Walls Where non-loadbearing walls are parallel to I-joists, the I-joists supporting the non-loadbearing wall shall be designed to carry the additional weight of the wall. Non-loadbearing walls perpendicular to I-joists shall be in accordance with the I-joist manufacturer's code evaluation report, unless the I-joists are designed for the additional weight of the wall (see Figure 2.4d).

2.3.2.6 Cantilevered I-Joists

2.3.2.6.1 Cantilevered I-Joists Supporting Loadbearing Walls Overhangs of cantilevered I-joists supporting a loadbearing wall at the end of the cantilever shall not be permitted, unless the I-joists are designed for the cantilevered condition with the additional floor load of the cantilevered area and the gravity load of the exterior loadbearing wall specified in Table 2.11.

2.3.2.6.2 Cantilevered I-Joists Supporting Non-Loadbearing Walls Overhang lengths of cantilevered I-joists supporting a floor and a non-loadbearing wall at the end of the cantilever shall be in accordance with the I-joist manufacturer's code evaluation report, unless the I-joists are designed for the cantilevered condition with the additional floor load of the cantilevered area and weight of the wall (see Figures 2.4e and 2.9a-b).

2.3.2.7 Floor Openings

Framing around floor openings shall be in accordance with 2.3.2.1 (see Figures 2.6a-c).

2.3.3 Wood Floor Truss Systems

2.3.3.1 Floor Trusses

Wood floor truss systems shall be in accordance with this section, the governing building code, the truss design drawings, and any additional requirements as set forth in the manufacturer's code evaluation report. The design of metal plate connected parallel chord floor trusses shall comply with *ANSI/TPI 1*. Floor trusses other than metal plate connected floor trusses shall be designed in accordance with the *NDS*.

2.3.3.1.1 Notching and Boring Notching, boring, or the removal of floor truss chords or webs shall not be

Copyright © American Wood Council. Downloaded/printed pursuant to License Agreement. No reproduction or transfer authorized.

permitted without approval from the truss designer.

2.3.3.2 Bearing

Floor trusses shall bear directly on beams, girders, ledgers, or loadbearing walls or be supported by hangers or framing anchors (see Figures 2.12a-g). Truss bearing shall not be less than the design requirements.

2.3.3.3 End Restraint

Restraint against twisting shall be provided at the end of each truss by fastening to a full-height rim, band joist, header, or other member or by using blocking panels between truss ends. Framing details (see Figure 2.15a) for end restraint shall be provided in a manner consistent with SBCA/TPI's *Building Component Safety Information (BCSI) – Guide to Good Practice for Handling, Installing, Restraining, & Bracing of Metal Plate Connected Wood Trusses,* or *ANSI/TPI 1*, or 2.3.3.1.

2.3.3.4 Chord and Web Bracing

Chord and web bracing shall be provided in a manner consistent with the guidelines provided in *BCSI, ANSI/TPI 1*, or in accordance with 2.3.3.1, and the bracing requirements specified in the construction design documents (see Figure 2.14).

2.3.3.5 Single or Continuous Floor Trusses Supporting Walls

Floor trusses shall be designed for any intermediate loads and supports as shown on the construction documents and/or plans.

2.3.3.6 Cantilevered Trusses

Cantilevered floor trusses shall be designed for all anticipated loading conditions (see Figures 2.13a-b).

2.3.3.7 Floor Openings

Framing around floor openings shall be designed to transfer loads to adjacent framing members that are designed to support the additional concentrated loads. Fasteners, connections, and stiffeners shall be designed for the loading conditions.

2.3.4 Floor Sheathing

2.3.4.1 Sheathing Spans

Floors shall be fully sheathed with sheathing capable of resisting and transferring the applied gravity loads to the floor framing members. Sheathing shall be continuous over two or more spans.

2.3.4.2 Shear Capacity

Floor sheathing and fasteners shall be capable of resisting the total shear loads calculated using Tables 2.5A and 2.5B for wind perpendicular and parallel to ridge respectively, or using Table 2.6 for seismic motion.

2.3.4.2.1 Diaphragm Chords Diaphragm chords shall be continuous for the full length of the diaphragm. Diaphragm members and chord splices shall be capable of resisting the chord forces, calculated by the following equation:

$$T = \frac{vL}{4} \qquad (2.3\text{-}1)$$

where:

T = Chord force, lbs

v = Required unit shear capacity of the floor diaphragm, plf

L = Floor diaphragm dimension perpendicular to the lateral load, ft

2.3.4.3 Sheathing Edge Support

Edges of floor sheathing shall have approved tongue-and-groove joints or shall be supported with blocking, unless 1/4-inch minimum thickness underlayment or 1-1/2 inches of approved cellular or lightweight concrete is installed, or unless the finish floor is of 3/4-inch wood strip.

2.3.5 Floor Diaphragm Bracing

At panel edges perpendicular to floor framing members, framing and connections shall be provided to transfer the lateral wind loads from the exterior wall to the floor diaphragm assembly in accordance with the requirements of Table 2.1 (see Figure 2.3).

2.4 Wall Systems

2.4.1 Exterior Walls

2.4.1.1 Wood Studs

Exterior wall studs shall be in accordance with the requirements of Table 2.9A or Table 2.10 for the wind loads specified. Exterior loadbearing studs shall be in accordance with the requirements of Table 2.9B or Table 2.11 for the gravity loads specified. Exterior loadbearing studs shall be designed to resist the uplift loads specified in Table 2.2A, independent of the requirements of Tables

Copyright © American Wood Council. Downloaded/printed pursuant to License Agreement. No reproduction or transfer authorized.
AMERICAN WOOD COUNCIL

2.9A, 2.9B, 2.10, and 2.11. Exterior non-loadbearing studs shall be designed to resist the rake overhang uplift loads specified in Table 2.2C.

2.4.1.1.1 Notching and Boring Notches in either edge of studs shall not be located in the middle one-third of the stud length. Notches in the outer thirds of the stud length shall not exceed 25% of the actual stud depth. Bored holes shall not exceed 40% of the actual stud depth and the edge of the hole shall not be closer than 5/8-inch to the edge of the stud. Notches and holes shall not occur in the same cross-section (see Figure 3.3b).

EXCEPTION: Bored holes shall not exceed 60% of the actual stud depth when studs are doubled.

2.4.1.1.2 Stud Continuity Studs shall be continuous between horizontal supports, including but not limited to: girders, floor diaphragm assemblies, ceiling diaphragm assemblies, and roof diaphragm assemblies. Where attic floor diaphragm or ceiling diaphragm assemblies are used to brace gable endwalls, the sheathing and fasteners shall be capable of resisting the minimum shear requirements of Table 2.5C.

2.4.1.1.3 Corners Corner framing shall be capable of transferring axial tension and compression loads from the shear walls and the structure above, connecting adjoining walls, and providing adequate backing for the attachment of sheathing and cladding materials.

2.4.1.2 Top Plates

Exterior stud walls shall be capped with a single or double top plate with bearing capacity in accordance with Table 2.9B, and bending capacity in accordance with Table 2.11. Top plates shall be tied at joints, corners, and intersecting walls to resist and transfer lateral loads to the roof or floor diaphragm in accordance with the requirements of Table 2.1. Double top plates shall be lap spliced and overlap at corners and intersections with other exterior and interior loadbearing walls.

2.4.1.3 Bottom Plate

Wall studs shall bear on a bottom plate with bearing capacity in accordance with Table 2.9B. The bottom plate shall not be less than 2 inch nominal thickness and not less than the width of the wall studs. Studs shall have full bearing on the bottom plate. Bottom plates shall be connected to transfer lateral loads to the floor diaphragm or foundation in accordance with the requirements of Table 2.1. Bottom plates that are connected directly to the foundation shall have full bearing on the foundation.

2.4.1.4 Wall Openings

Headers shall be provided over all exterior wall openings. Headers shall be supported by wall studs, jack studs, hangers, or framing anchors.

2.4.1.4.1 Headers Headers shall be in accordance with the lateral capacity requirements of Table 2.1 and the gravity capacity requirements of Table 2.11.

2.4.1.4.2 Studs Supporting Header Beams Wall and jack studs shall be in accordance with the same requirements as exterior wall studs selected in 2.4.1.1. Wall and jack studs shall be designed for additional lateral and uplift loads from headers and window sill plates in accordance with Table 2.1 and Table 2.2A.

2.4.1.4.3 Window Sill Plates Window sill plates shall be in accordance with the lateral capacity requirements of Table 2.1.

2.4.2 Interior Loadbearing Partitions

2.4.2.1 Wood Studs

Interior loadbearing studs shall be in accordance with the requirements of Table 2.9C or Table 2.11 for gravity loads.

2.4.2.1.1 Notching and Boring Notches in either edge of studs shall not be located in the middle one-third of the stud length. Notches in the outer thirds of the stud length shall not exceed 25% of the actual stud depth. Bored holes in interior loadbearing studs shall not exceed 40% of the actual stud depth and shall not be closer than 5/8-inch to the edge. Notches and holes shall not occur in the same cross-section (see Figure 3.3b).

EXCEPTION: Bored holes shall not exceed 60% of the actual stud depth when studs are doubled.

2.4.2.1.2 Stud Continuity Studs shall be continuous between horizontal supports, including but not limited to: girders, floor diaphragm assemblies, ceiling diaphragm assemblies, and roof diaphragm assemblies.

2.4.2.2 Top Plates

Interior loadbearing partition walls shall be capped with a single or double top plate with bearing capacity in accordance with Table 2.9C, and bending capacity in accordance with Table 2.11. Top plates shall be tied at joints, corners, and intersecting walls. Double top plates shall be lap spliced and overlap at corners and at intersections with other exterior and interior loadbearing walls.

2.4.2.3 Bottom Plate

Wall studs shall bear on a bottom plate with bearing capacity in accordance with Table 2.9C. The bottom plate shall not be less than 2 inch nominal thickness and not less than the width of the wall studs. Studs shall have full bearing on the bottom plate.

Copyright © American Wood Council. Downloaded/printed pursuant to License Agreement. No reproduction or transfer authorized.

2.4.2.4 Wall Openings

Headers shall be provided over all interior loadbearing wall openings. Headers shall be supported by wall studs, jack studs, hangers, or framing anchors.

2.4.2.4.1 Headers Headers shall be in accordance with the load requirements of Table 2.11.

2.4.2.4.2 Studs Supporting Header Beams Wall and jack studs shall be in accordance with the same requirements as interior loadbearing wall studs selected in 2.4.2.1.

2.4.3 Interior Non-Loadbearing Partitions

2.4.3.1 Wood Studs

Interior non-loadbearing studs shall be of adequate size and spacing to carry the weight of the applied finish.

2.4.3.1.1 Notching and Boring Notches in studs shall not exceed 40% of the actual stud depth. Bored holes shall not exceed 60% of the actual stud depth and shall not be closer than 5/8-inch to the edge. Notches and holes shall not occur in the same cross-section.

2.4.3.2 Top Plates

All interior non-loadbearing partitions shall be capped with single or double top plates.

2.4.3.3 Bottom Plate

Wall studs shall bear on at least one bottom plate.

2.4.4 Wall Sheathing

2.4.4.1 Sheathing Spans

Exterior wall sheathing shall be capable of resisting and transferring the wind suction loads specified in Table 2.4 to the wall framing.

2.4.4.2 Shear Walls

Walls parallel to the applicable wind load or seismic motion shall provide the required shear resistance at each level. The sum of the individual shear wall segment shear capacities shall meet or exceed the sum of shear loads collected by horizontal diaphragms above. Total shear loads shall be calculated using Tables 2.5A and 2.5B for wind perpendicular and parallel to ridge respectively, or using Table 2.6 for seismic motion. Design loads shall be distributed to the various vertical elements of the seismic force-resisting system in the story under consideration, based on the relative lateral stiffness of the vertical resisting elements and the diaphragm.

2.4.4.3 Sheathing Edge Support

All shear wall sheathing edges shall be supported.

2.5 Roof Systems

2.5.1 Lumber Rafter Systems

2.5.1.1 Rafters

Rafters shall be in accordance with the maximum spans (horizontal projection) as specified in Tables 2.14A-D for gravity loads. Rafters shall be designed in accordance with roof framing wind loads normal to the roof surface as specified in Table 2.16.

2.5.1.1.1 Jack Rafters Jack rafters shall be in accordance with 2.5.1.1.

2.5.1.1.2 Rafter Overhangs Rafter overhangs shall not exceed the lesser of one-third of the rafter span or 2 feet (see Figure 2.1f).

2.5.1.1.3 Rake Overhangs Rake overhang outlookers shall use continuous members connected in accordance with 2.2.6.8. Rake overhangs shall not exceed the lesser of one-half of the outlooker length or 2 feet (see Figure 2.1g).

EXCEPTION: Rake overhangs using lookout blocks shall not exceed 9 inches (see Figure 2.1h).

2.5.1.1.4 Notching and Boring Notches in the top or bottom edge of rafters shall not be located in the middle one-third of the rafter span. Notches in the outer thirds of the span shall not exceed one-sixth of the actual rafter depth. Where notches are made at the supports, they shall not exceed one-fourth the actual rafter depth. Bored holes are limited in diameter to one-third the actual rafter depth and the edge of the hole shall not be closer than 2 inches to the top or bottom edge of the rafter (see Figure 3.3a).

2.5.1.2 Bearing

Rafters shall bear directly on beams, girders, ledgers, or loadbearing walls or be supported by hangers or framing anchors.

2.5.1.3 End Restraint

Where the nominal depth-to-thickness ratio of a rafter exceeds 3, restraint against twisting shall be provided at the end of each rafter by fastening to a rim board or by using full-height blocking between rafter ends. Fasteners for end restraint shall be capable of resisting a 300 inch-pound twisting moment.

Copyright © American Wood Council. Downloaded/printed pursuant to License Agreement. No reproduction or transfer authorized.
AMERICAN WOOD COUNCIL

EXCEPTION: Where ceiling joists are attached directly to rafters, the combined bearing thickness of the ceiling joist and rafter shall be used to determine the depth-to-thickness ratio.

2.5.1.4 Ridge Beams

Rafters shall be supported on bearing walls, headers, or ridge beams. When ridge beams are used, beams shall be in accordance with the capacity requirements of Table 2.17. Rafters shall bear directly on the ridge beam or be supported by hangers or framing anchors. Ceiling joists or rafter ties shall not be required where a ridge beam is provided (see Figure 3.10a).

EXCEPTION: A ridge board shall be permitted to be substituted for a ridge beam when the roof slope equals or exceeds 3 in 12. The ridge board shall be at least 1 inch nominal in thickness and not less than the depth of the cut end of the rafter. The rafters shall be placed directly opposite each other. Ceiling joists or rafter ties in accordance with 2.5.1.6 shall be used to provide a continuous tie between exterior walls. Ceiling joist/rafter tie to rafter connections to resist thrust loads shall be in accordance with the requirements of Table 2.3 (see Figures 3.10b-c). Rafter spans shall be adjusted in accordance with the footnotes in Tables 2.14A-D (see Figure 3.10c).

2.5.1.5 Hip and Valley Beams

Hip and valley beams shall be in accordance with the requirements of Table 2.18.

2.5.1.6 Ceiling Joists

Ceiling joists shall be in accordance with the requirements of Tables 2.12A-B or Tables 2.13A-B, and shall be braced in accordance with 2.3.1.4.

2.5.1.7 Open Ceilings

Where ceiling joists and roof ties are omitted and rafters are used to create an open (cathedral) ceiling, rafter ends shall be supported on bearing walls, headers, or ridge beams. Rafters shall be attached to the support at each end in accordance with 2.2.

2.5.1.8 Roof Openings

Framing around roof openings shall be designed to transfer loads to adjacent framing members that are designed to support the additional concentrated loads. Fasteners, connections, and stiffeners shall be designed for the loading conditions.

2.5.2 Wood I-Joist Roof Systems

2.5.2.1 Roof I-Joists

I-joist roof systems shall be in accordance with this section, the governing building code, and any additional requirements as set forth in the manufacturer's code evaluation report. Single and continuous span I-joists shall be in accordance with the requirements of Tables 2.15A-D for gravity loads. I-joist roof systems shall be in accordance with the requirements of Table 2.16 for the wind loads specified.

2.5.2.1.1 Jack Rafters Jack rafters shall be in accordance with 2.5.2.1.

2.5.2.1.2 I-Joist Overhangs I-joist overhangs shall not exceed 2 feet, and shall be in accordance with 2.5.2.1 (see Figures 2.11a-d).

2.5.2.1.3 Rake Overhangs Rake overhangs shall not exceed 2 feet, and shall be in accordance with 2.5.2.1 (see Figure 2.11e).

2.5.2.1.4 Notching and Boring Notching or boring of I-joist flanges shall not be permitted. Holes in I-joist webs shall be in accordance with 2.5.2.1.

2.5.2.2 Bearing

I-joists shall bear directly on beams, girders, ledgers, or loadbearing walls or be supported by hangers (see Figures 2.10a-d and 2.11a-d). Required I-joist bearing capacity shall not be less than specified in Tables 2.15A-D.

2.5.2.3 End Restraint

Restraint against twisting shall be provided at the end of each I-joist by fastening to a rim board or by using full-height blocking between I-joist ends (see Figures 2.10a-c and 2.11a,c,d). Framing details for end restraint shall be installed in accordance with 2.5.2.1.

2.5.2.4 Bridging and Web Stiffeners

Where required, bridging and web stiffeners shall be installed in accordance with 2.5.2.1.

2.5.2.5 Ridge Beams

I-joists shall be supported on bearing walls, headers, or ridge beams. When ridge beams are used (see Figures 2.10a-c), beams shall be in accordance with the capacity requirements of Table 2.17. I-joists shall bear directly on the ridge beam or be supported by hangers or framing anchors.

2.5.2.6 Hip and Valley Beams

Hip and valley beams shall be in accordance with the requirements of Table 2.18.

2.5.2.7 Ceiling Joists

Single and continuous span ceiling joists shall be in

Copyright © American Wood Council. Downloaded/printed pursuant to License Agreement. No reproduction or transfer authorized.
AMERICAN WOOD COUNCIL

accordance with the requirements of Tables 2.12A-B or Tables 2.13A-B. Ceiling I-joists shall comply with 2.5.2.1 and be installed in accordance with 2.3.2. Ceiling joists are not required for I-joist roof systems.

2.5.2.8 Roof Openings

Framing around roof openings shall be in accordance with 2.5.2.1.

2.5.3 Wood Roof Truss Systems

2.5.3.1 Roof Trusses

Wood roof truss systems shall be in accordance with this section, the governing building code, the truss design drawings, and any additional requirements as set forth in the manufacturer's code evaluation report. The design of metal plate connected roof trusses shall comply with *ANSI/TPI 1* (see Figures 2.16a-d, 2.17a-b, and 2.18a-b). Wood roof trusses other than metal plate connected roof trusses shall be designed in accordance with the *NDS*.

2.5.3.1.1 Notching and Boring Notching, boring, or the removal of roof truss chords or webs shall not be permitted without approval from the truss designer.

2.5.3.2 Bearing

Roof trusses shall bear directly on beams, girders, ledgers, or loadbearing walls or be supported by hangers or framing anchors. Truss bearing shall not be less than the design requirements.

2.5.3.3 End Restraint

Restraint against twisting shall be provided at the end of each truss by fastening to a rim, bandjoist, header, or other member or by using full-height blocking between truss ends. Framing details shall be provided in a manner consistent with the guidelines provided in *BCSI, ANSI/TPI 1*, or 2.5.3.1.

2.5.3.4 Chord and Web Bracing

Chord and web bracing shall be provided in a manner consistent with the guidelines provided in *BCSI, ANSI/TPI 1*, or in accordance with 2.5.3.1, and the bracing requirements specified in the construction design documents.

2.5.3.5 Roof Openings

Framing around roof openings shall be designed to transfer loads to adjacent framing members that are designed to support the additional concentrated loads. Fasteners, connections, and stiffeners shall be designed for the loading conditions.

2.5.4 Roof Sheathing

2.5.4.1 Sheathing Spans

Roofs shall be fully sheathed with sheathing capable of resisting and transferring the applied gravity loads and wind suction loads specified in Table 2.4 to the roof framing members. Sheathing shall be continuous over two or more spans.

2.5.4.2 Shear Capacity

Roof sheathing and fasteners shall be capable of resisting the total shear loads calculated using Tables 2.5A and 2.5B for wind perpendicular and parallel to ridge respectively, or using Table 2.6 for seismic motion.

2.5.4.2.1 Diaphragm Chords Diaphragm chords shall be continuous for the full length of the diaphragm. Diaphragm members and chord splices shall be capable of resisting the chord forces, calculated by the following equation:

$$T = \frac{vL}{4} \qquad (2.5\text{-}1)$$

where:

T = Chord force, lbs

v = Required unit shear capacity of the roof diaphragm, plf

L = Roof diaphragm dimension perpendicular to the lateral load, ft

2.5.4.3 Sheathing Edge Support

Edges of all 3/8-inch wood structural panel roof sheathing, or 7/16-inch wood structural panel roof sheathing supported at 24 inches on center, shall be supported with blocking or edge clips.

2.5.5 Roof Diaphragm Bracing

Framing and connections shall be provided, at panel edges perpendicular to roof framing members, to transfer the lateral wind loads from the exterior wall to the roof diaphragm assembly in accordance with the requirements of Table 2.1 (see Figure 2.3).

EXCEPTION: When an attic floor or ceiling diaphragm is used to brace the gable endwall or when a hip roof system is used, additional roof diaphragm blocking is not required.

Copyright © American Wood Council. Downloaded/printed pursuant to License Agreement. No reproduction or transfer authorized.
AMERICAN WOOD COUNCIL

List of Figures

2.1a Cantilever With Loadbearing Wall 28

2.1b Cantilever With Non-Loadbearing Wall 28

2.1c Cantilever With Loadbearing Wall - Designed for Additional Load Where Cantilever > d 29

2.1d Setback Limits for Loadbearing Wall 29

2.1e Setback Limits for Loadbearing Wall - Designed for Additional Load Where Offset > d 30

2.1f Rafter Overhang Limits 30

2.1g Rake Overhang Limits - Outlookers 31

2.1h Rake Overhang Limits - Lookout Blocks 32

2.1i Vertical Floor Offset 33

2.1j Floor and Roof Diaphragm Aspect Ratio Limits 33

2.1k Floor Diaphragm Opening Limits 34

2.1ℓ Shear Wall Line Offset 34

2.2a Typical Lateral Framing Connections 35

2.2b Shear Connection Locations 36

2.2c Typical Wind Uplift Connections 37

2.2d Overturning Detail 38

2.3 Endwall Blocking Detail (Floor or Roof) 39

I-Joists

2.4a I-Joist Bearing on Wall With Blocking as End Restraint 40

2.4b I-Joist Bearing on Wall With Rim Joist as End Restraint 40

2.4c Continuous I-Joist Over a Bearing Wall Supporting a Wall Above 40

2.4d Vertical Wall Offset on I-Joist Floor Assembly 41

2.4e Continuous Cantilevered I-Joist Over a Bearing Wall Supporting a Wall Above 41

2.5a I-Joist Connection to Sill Plate 42

2.5b Column Load Transfer Through I-Joist Floor System to Foundation 42

2.5c I-Joist Bevel Cut 42

2.6a I-Joist Floor Header 43

2.6b I-Joist Floor Header With Filler Block Between Double Trimmers 43

2.6c Stair Stringer Connection to I-Joist Floor System 44

2.7 I-Joist Supported by Hangers Attached to Interior Beam 44

2.8 I-Joist Web Stiffener Attachment at Bearing Points 45

2.9a Typical I-Joist Cantilever Supporting Uniform Loads 46

2.9b Lumber Cantilever Attached to I-Joist 46

2.10a Rafter Ridge Blocking and Uplift Strap for I-Joist Bearing on a Ridge Beam 47

2.10b Hanger and Uplift Strap for I-Joist Attached to Side of Ridge Beam 47

2.10c Filler Block and Ridge Blocking for I-Joist Bearing on Ridge Beam 47

2.10d I-Joist Connection to Header at Roof Opening 47

2.11a I-Joist Roof Rafter Bearing on Exterior Wall With Top Chord Overhang 48

2.11b I-Joist Roof Rafter Bearing on Exterior Wall With Lumber Overhang 48

2.11c I-Joist Roof Rafter Bearing on Beveled Plate .. 48

2.11d I-Joist Roof Rafter Bearing on Exterior Wall With Top Chord and Lumber Overhang 49

2.11e Gable End Rake Overhang Outlookers Attached to I-Joist Roof Rafter 49

Copyright © American Wood Council. Downloaded/printed pursuant to License Agreement. No reproduction or transfer authorized.

Trusses

2.12a Bottom Chord Bearing on Exterior Wall 50

2.12b Bottom Chord Bearing on Interior Wall 50

2.12c Top Chord Bearing on Interior Wall 50

2.12d Top Chord Bearing on Exterior Wall 50

2.12e Interior Pocket Bearing 50

2.12f Top Chord Bearing Truss on Ledger 51

2.12g Bottom Chord Bearing Truss in Hanger 51

2.13a Truss Cantilever Detail 52

2.13b Truss Cantilever Detail 52

2.14 Truss Strongback Details 53

2.15a Blocking in Floor Space at End Bearing Truss With Band 54

2.15b Blocking in Floor Space at Interior Loadbearing Walls 55

2.15c Blocking in Floor Space at Floor Elevation Change 56

2.16a Roof Truss Overhang 57

2.16b Roof Truss Overhang and Cantilever 57

2.16c Roof Truss Overhang and Cantilever 57

2.16d Roof Truss Overhang With Level Return 57

2.17a Plan and Isometric of Jack Truss System 58

2.17b Plan and Isometric of Step Down Truss System 59

2.18a Roof Intersection with Valley Fill 60

2.18b Total Roof Truss System 60

Copyright © American Wood Council. Downloaded/printed pursuant to License Agreement. No reproduction or transfer authorized.
AMERICAN WOOD COUNCIL

Figure 2.1a Cantilever With Loadbearing Wall (see 2.1.3.2c)

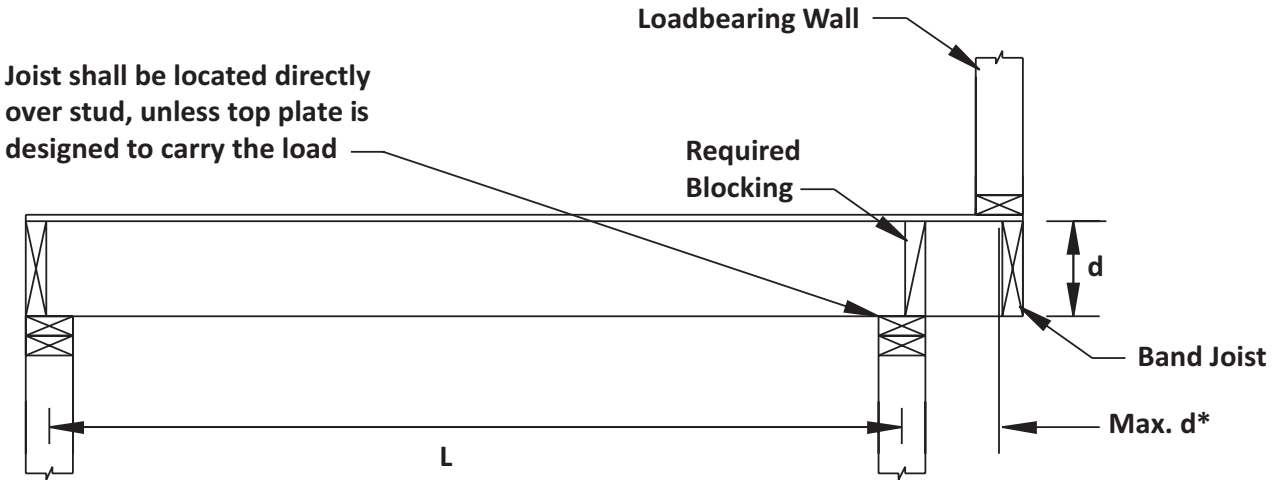

* See 3.3.1.6.1 Exception

Figure 2.1b Cantilever With Non-Loadbearing Wall (see 2.1.3.2c)

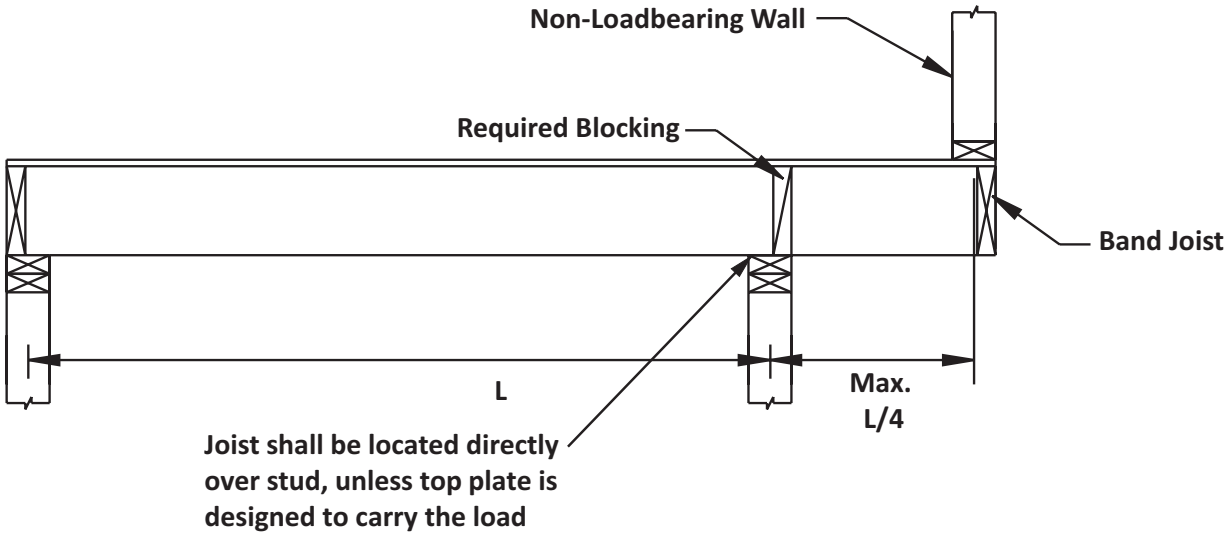

Copyright © American Wood Council. Downloaded/printed pursuant to License Agreement. No reproduction or transfer authorized.

Figure 2.1c Cantilever With Loadbearing Wall - Designed for Additional Load Where Cantilever > d (see 2.1.3.2c)

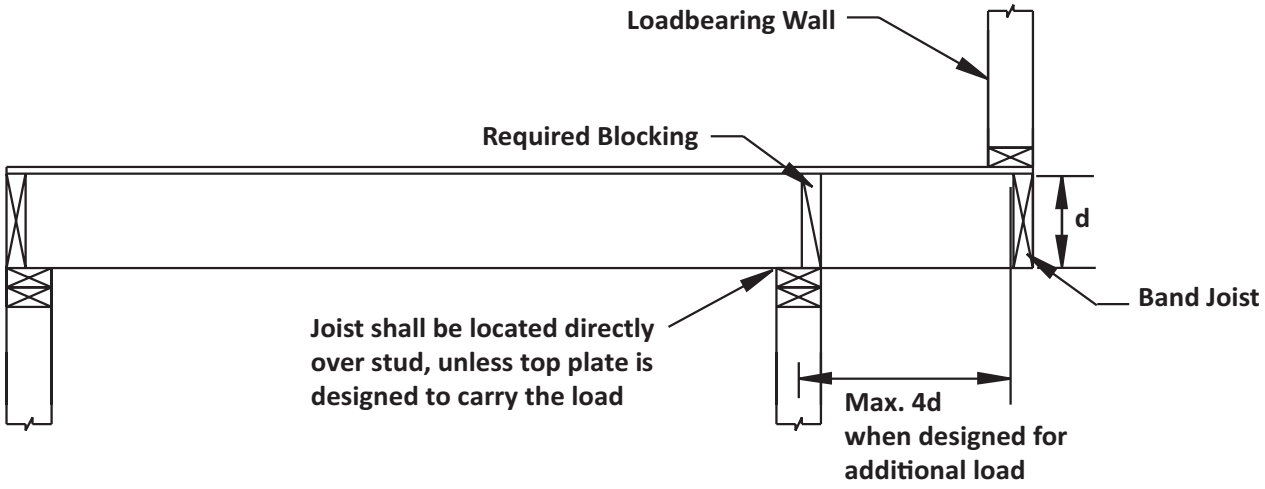

Figure 2.1d Setback Limits for Loadbearing Wall (see 2.1.3.2d)

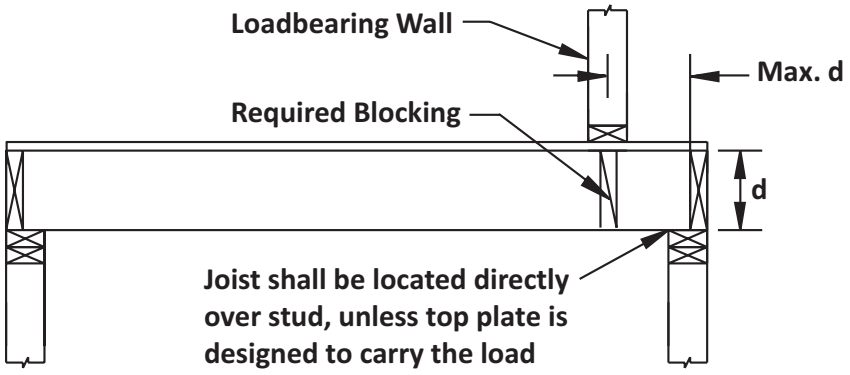

Copyright © American Wood Council. Downloaded/printed pursuant to License Agreement. No reproduction or transfer authorized.

Figure 2.1e Setback Limits for Loadbearing Wall - Designed for Additional Load Where Offset > d (see 2.1.3.2d)

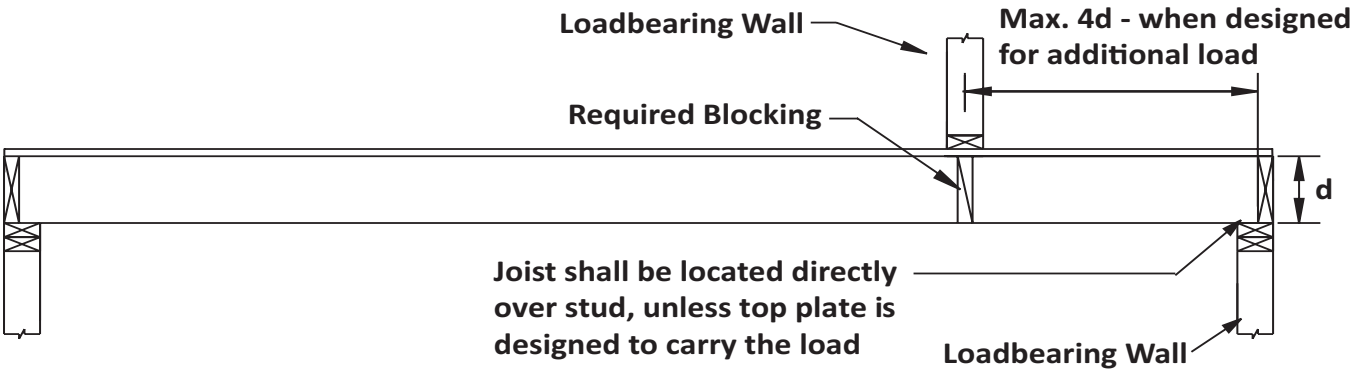

Figure 2.1f Rafter Overhang Limits (see 2.1.3.4c)

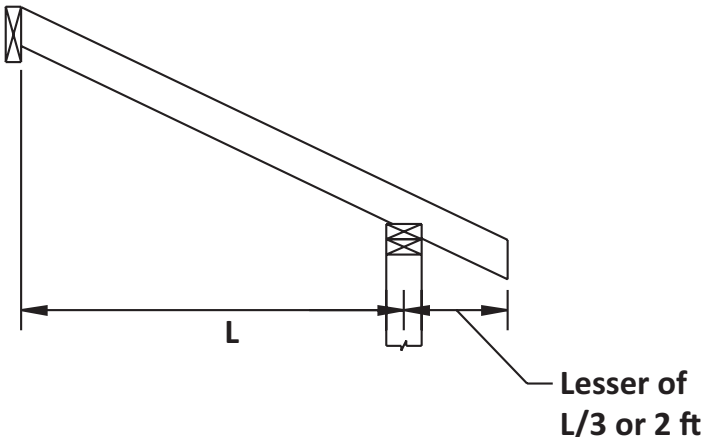

Copyright © American Wood Council. Downloaded/printed pursuant to License Agreement. No reproduction or transfer authorized.

Figure 2.1g Rake Overhang Limits - Outlookers (see 2.1.3.4c)

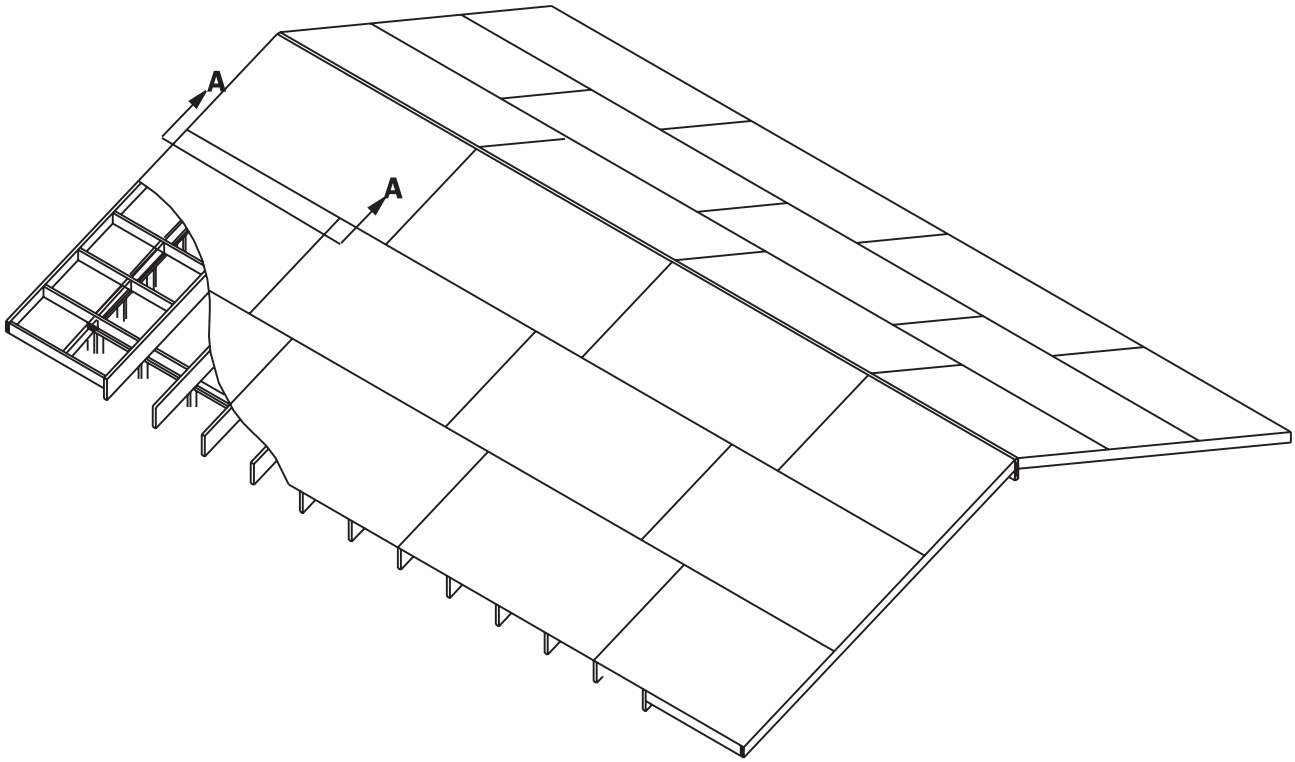

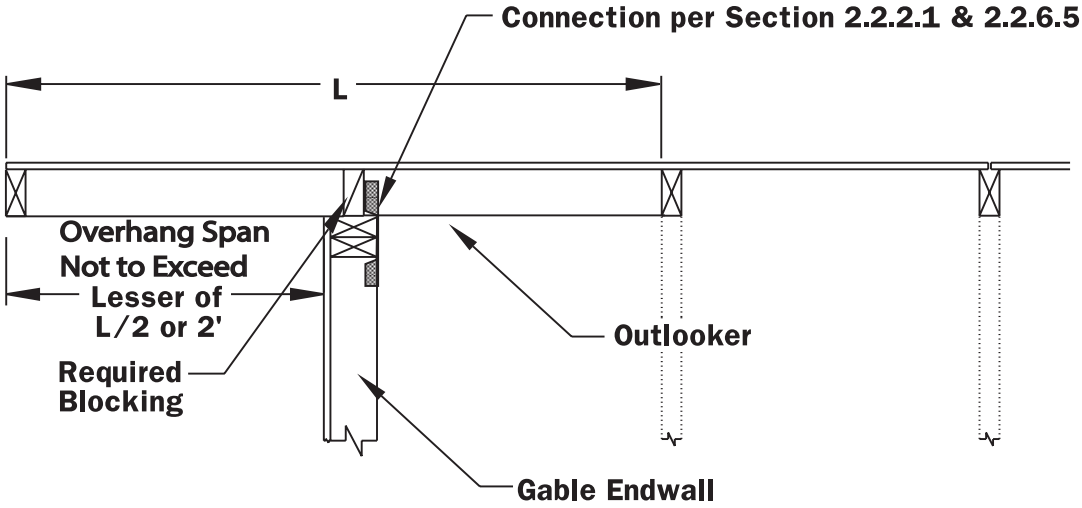

Section A-A

Copyright © American Wood Council. Downloaded/printed pursuant to License Agreement. No reproduction or transfer authorized.

Figure 2.1h Rake Overhang Limits - Lookout Blocks (see 2.1.3.4c & 3.1.3.4c)

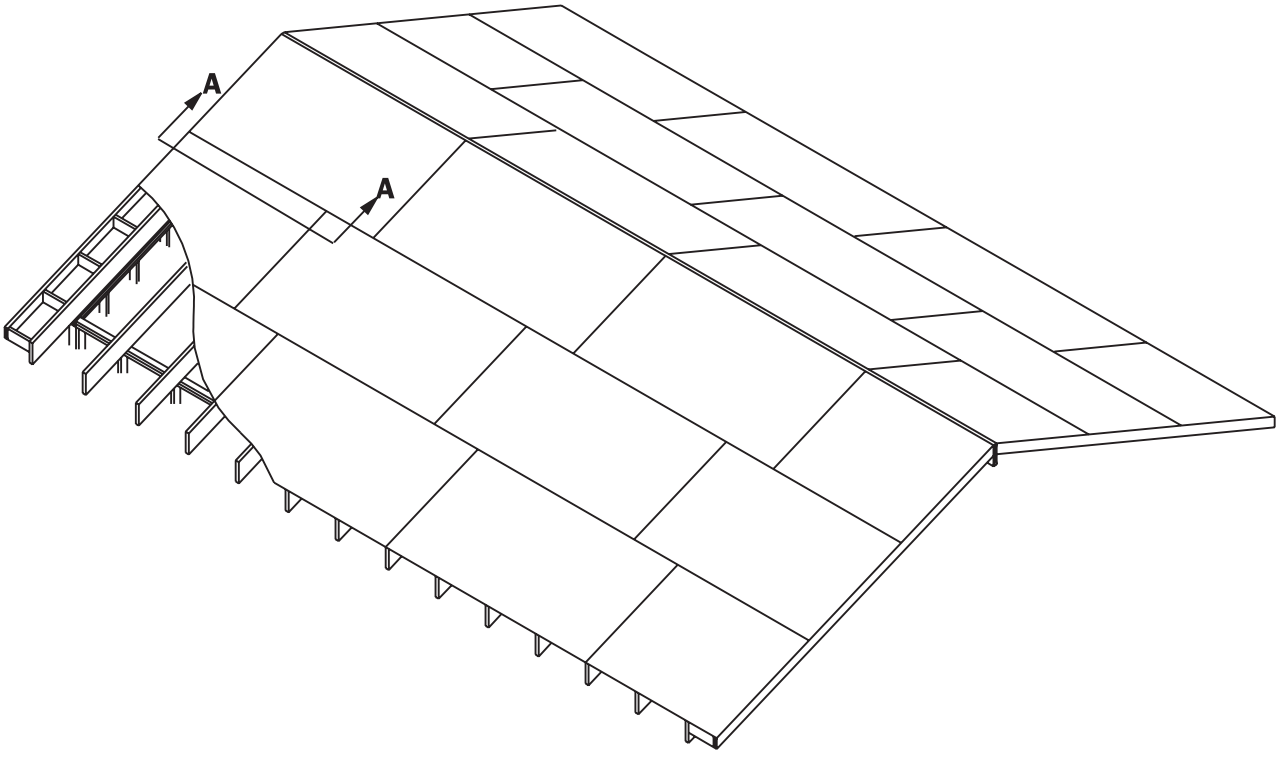

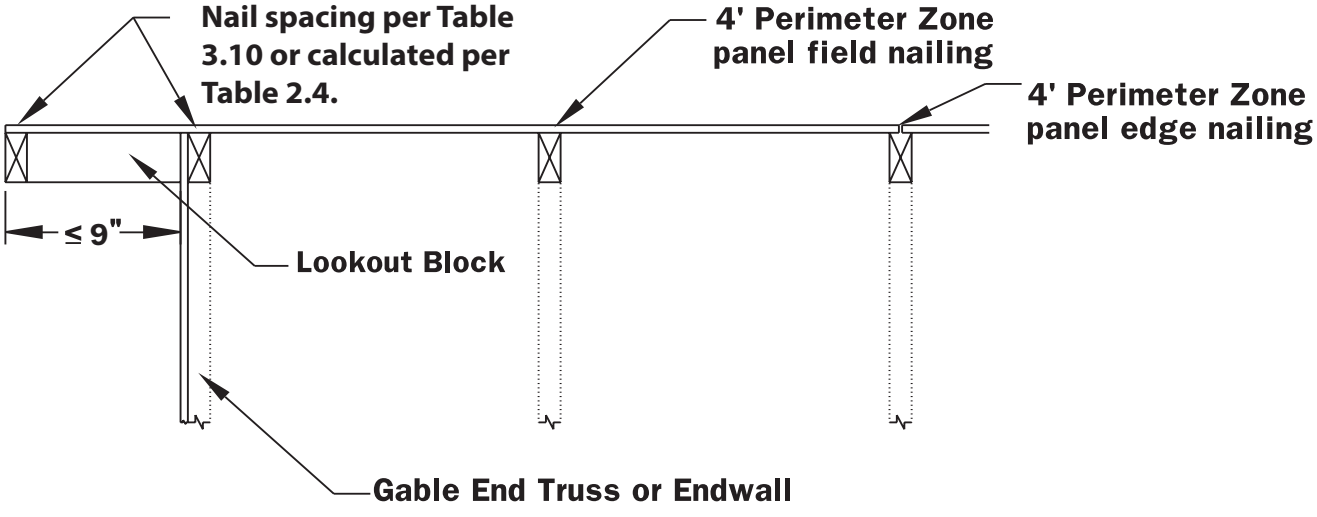

Section A-A

Copyright © American Wood Council. Downloaded/printed pursuant to License Agreement. No reproduction or transfer authorized.
AMERICAN WOOD COUNCIL

Figure 2.1i Vertical Floor Offset

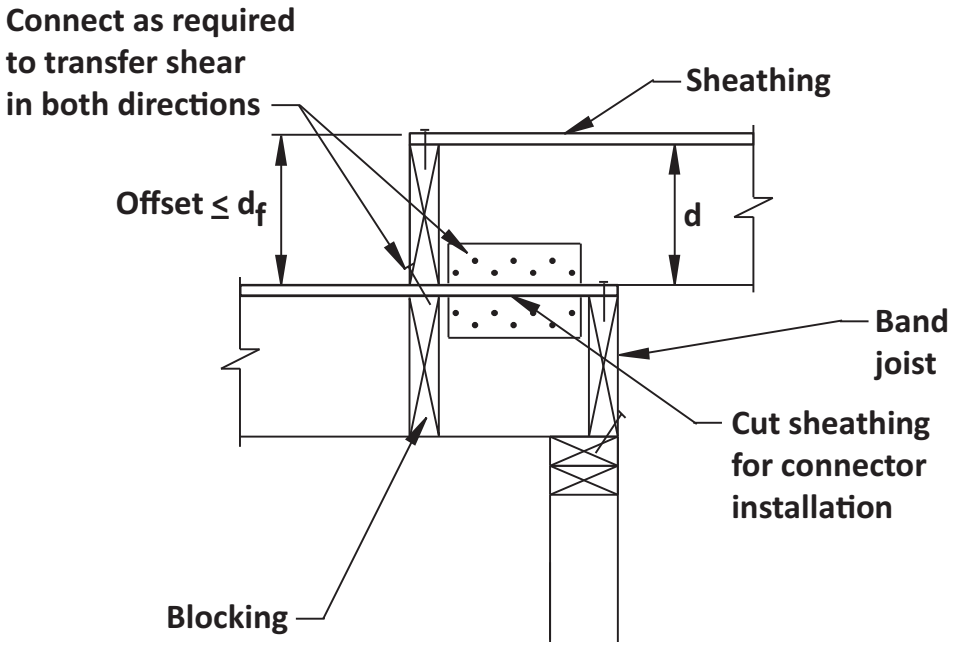

Figure 2.1j Floor and Roof Diaphragm Aspect Ratio Limits

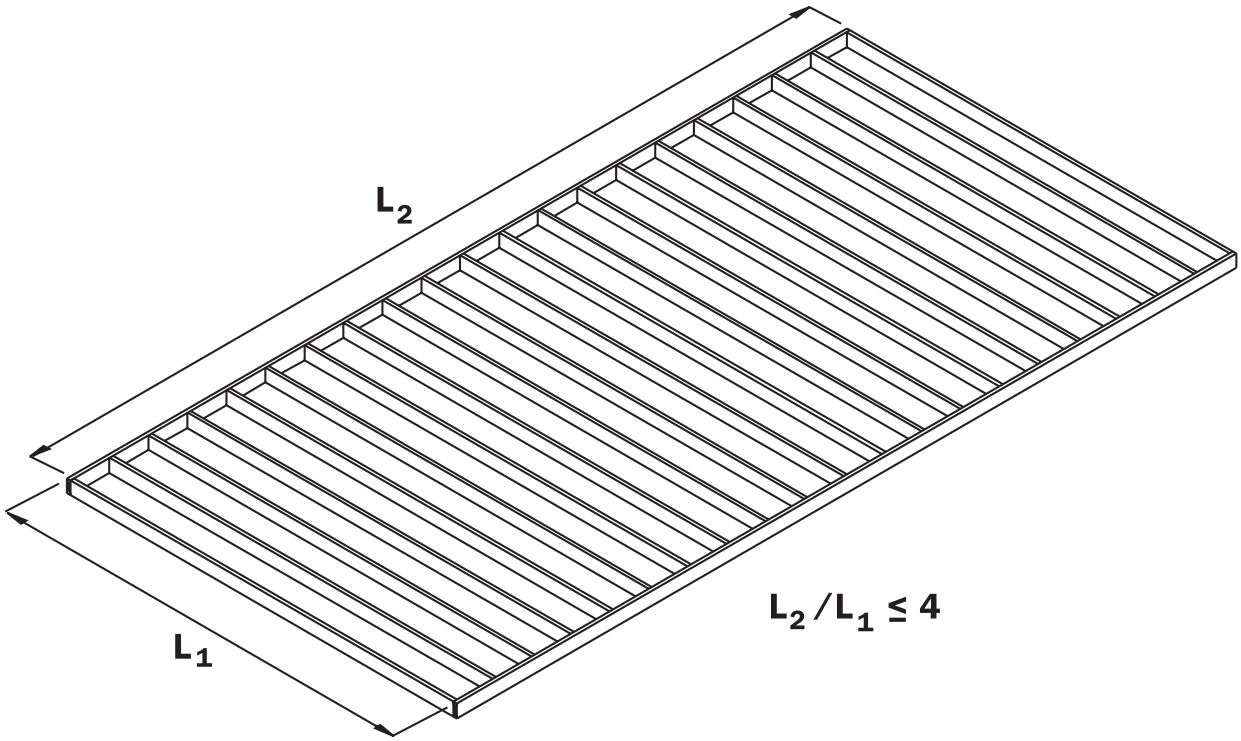

Copyright © American Wood Council. Downloaded/printed pursuant to License Agreement. No reproduction or transfer authorized.
AMERICAN WOOD COUNCIL

Figure 2.1k Floor Diaphragm Opening Limits

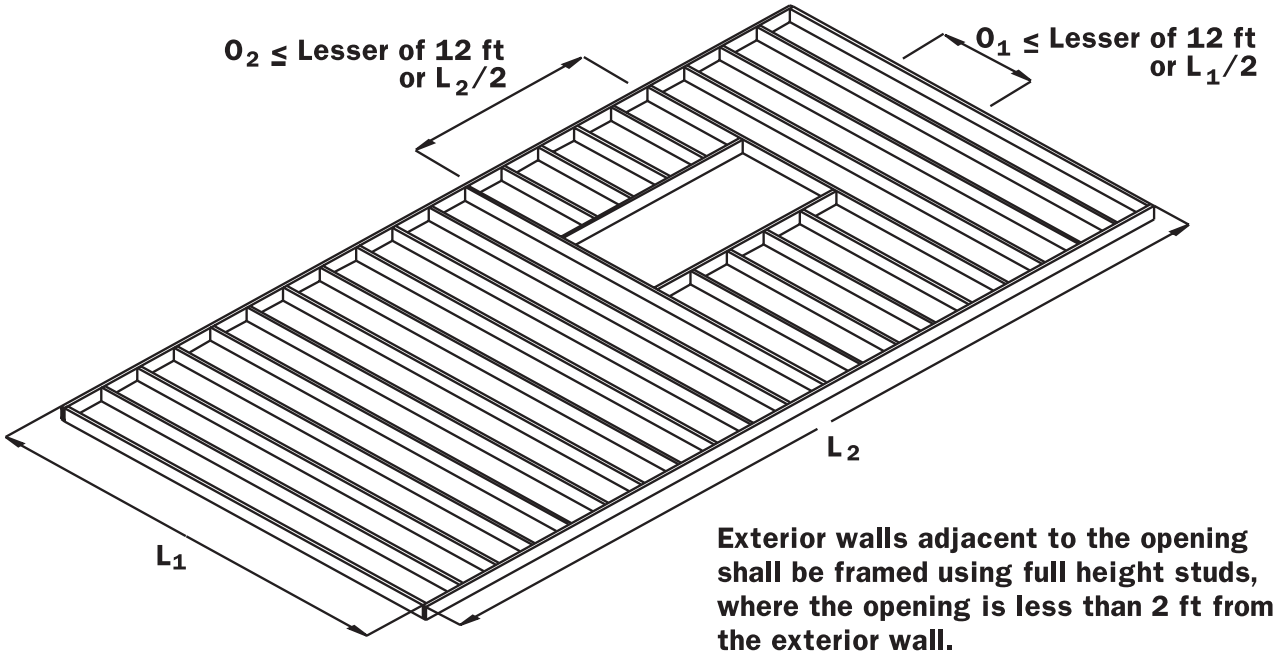

Figure 2.1ℓ Shear Wall Line Offset

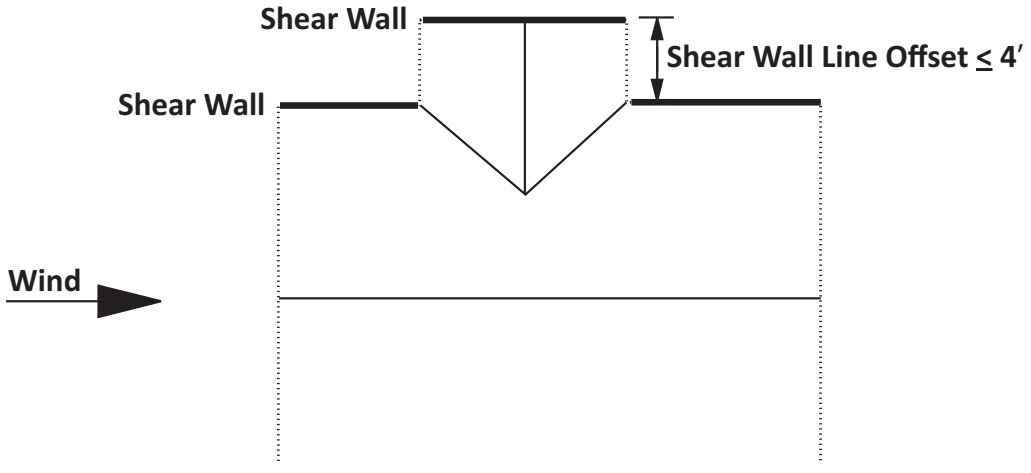

Copyright © American Wood Council. Downloaded/printed pursuant to License Agreement. No reproduction or transfer authorized.
AMERICAN WOOD COUNCIL

Figure 2.2a Typical Lateral Framing Connections

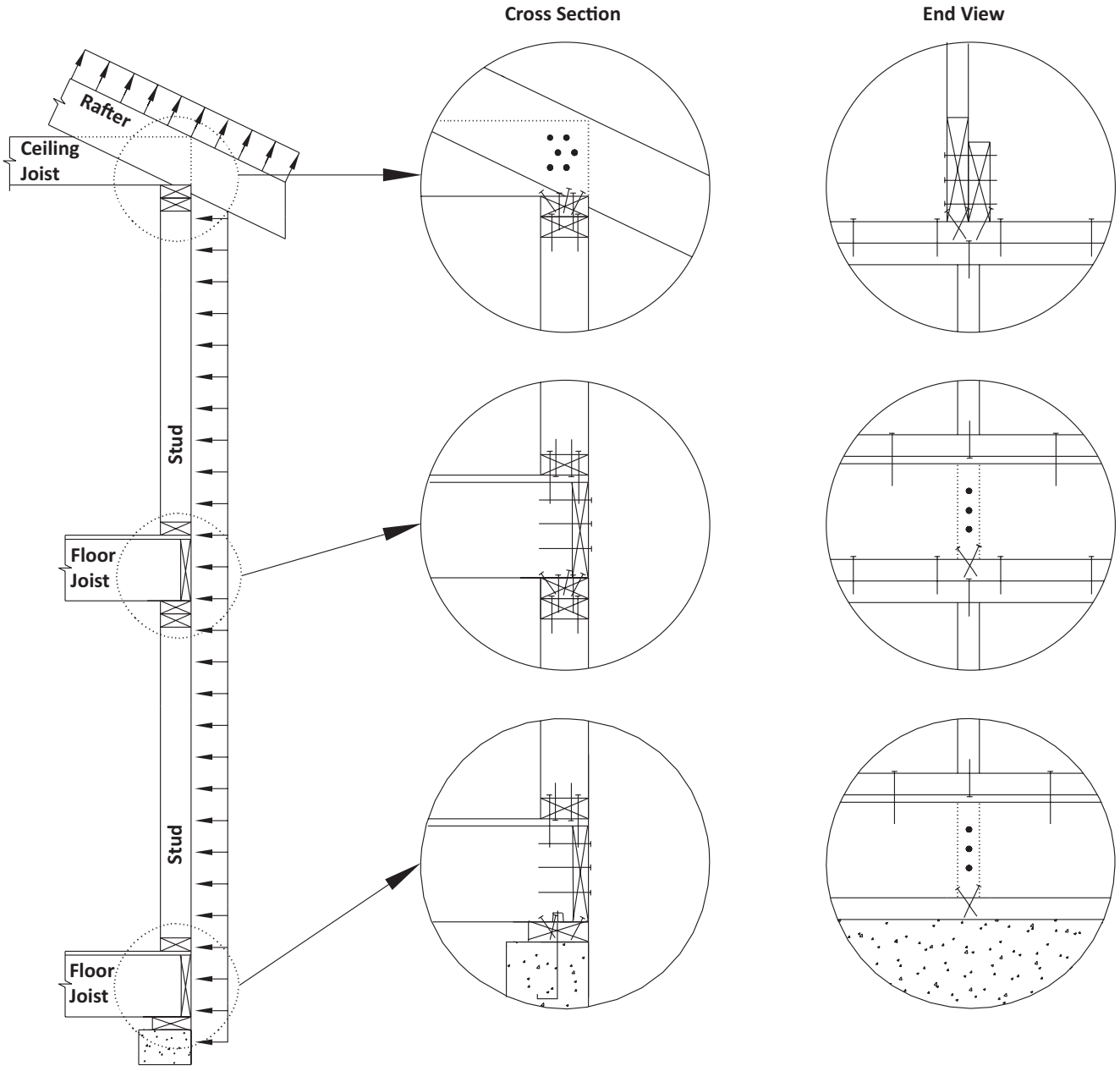

Copyright © American Wood Council. Downloaded/printed pursuant to License Agreement. No reproduction or transfer authorized.

Figure 2.2b Shear Connection Locations

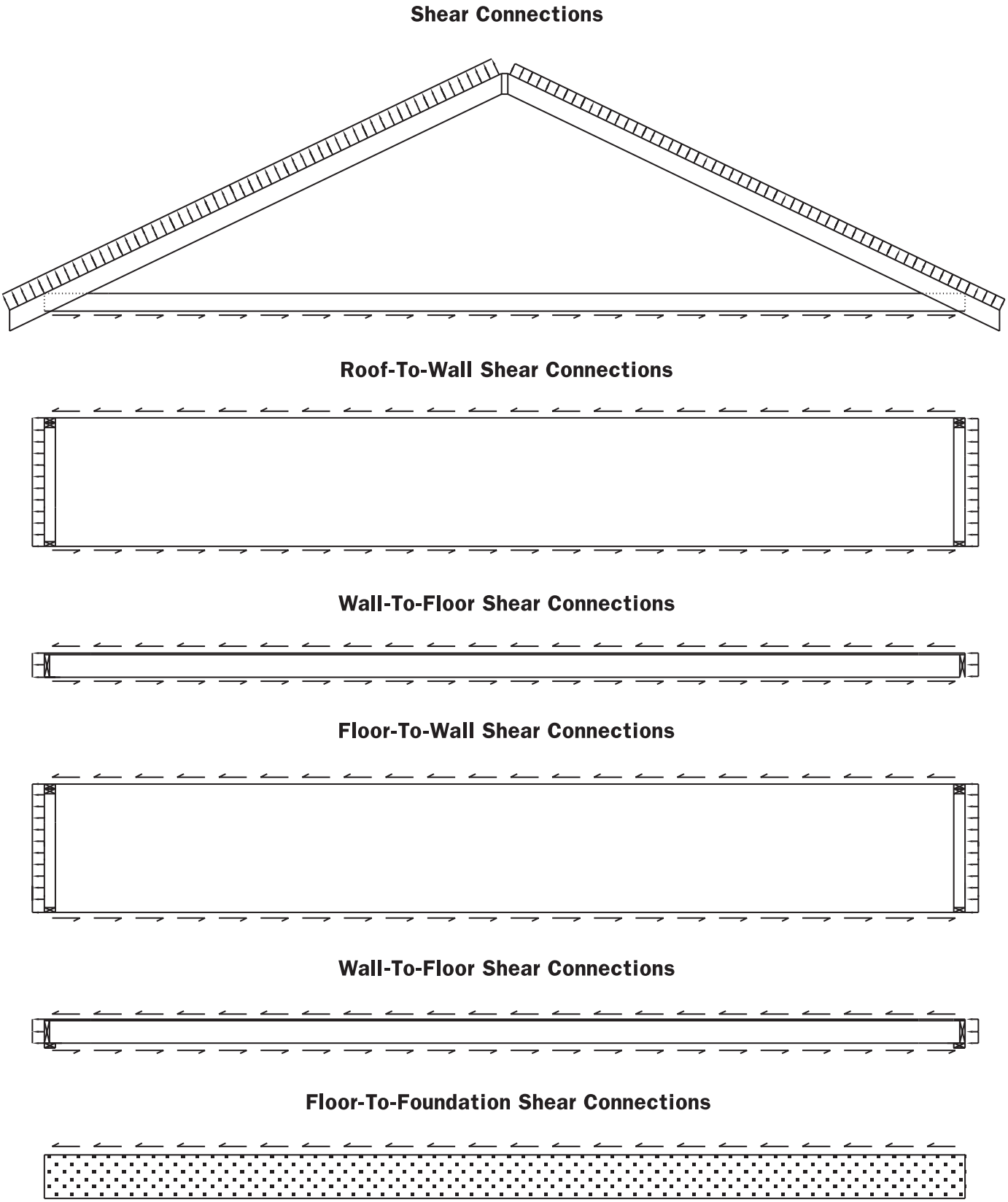

Copyright © American Wood Council. Downloaded/printed pursuant to License Agreement. No reproduction or transfer authorized.

Figure 2.2c Typical Wind Uplift Connections

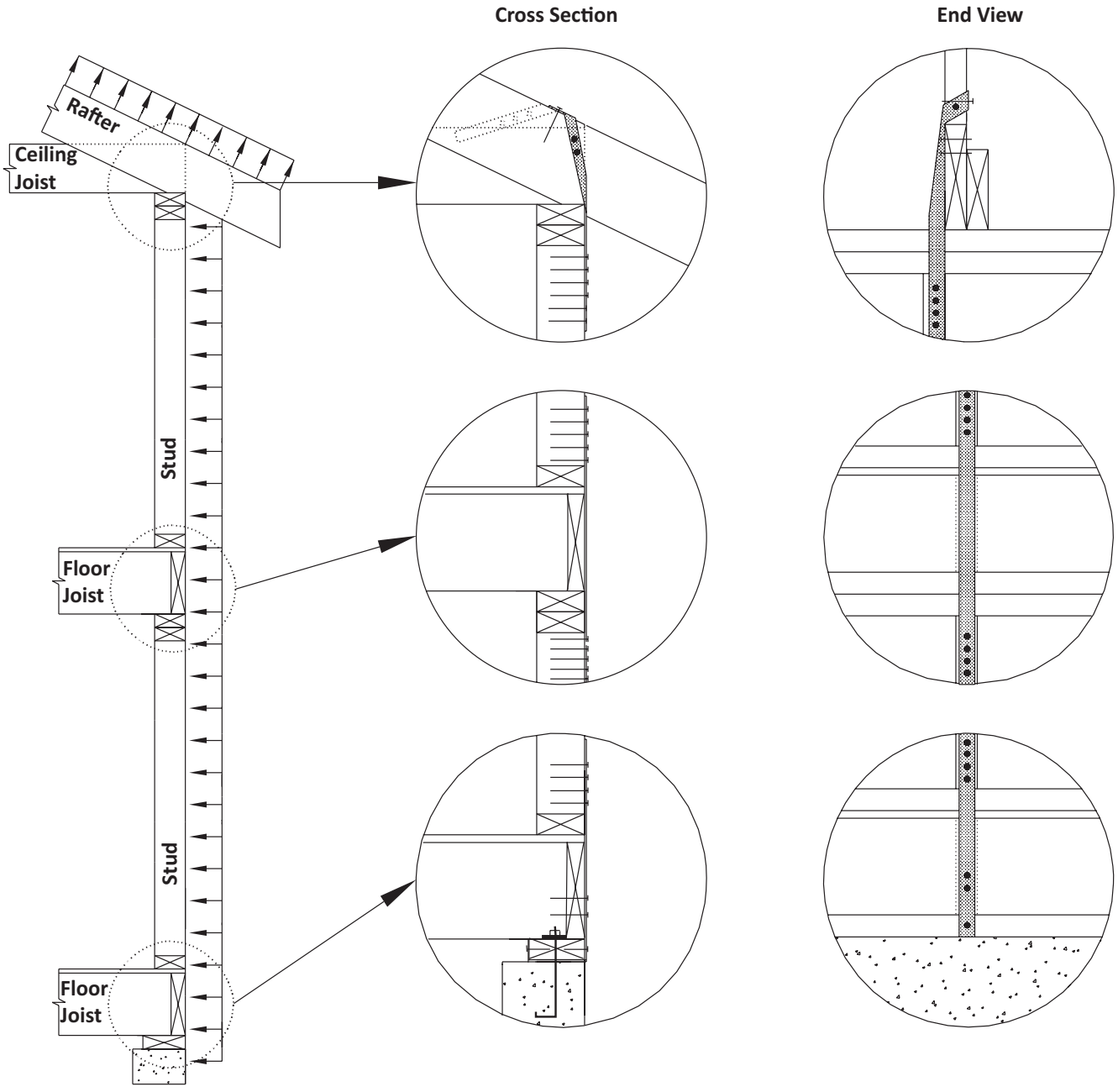

Copyright © American Wood Council. Downloaded/printed pursuant to License Agreement. No reproduction or transfer authorized.

Figure 2.2d Overturning Detail

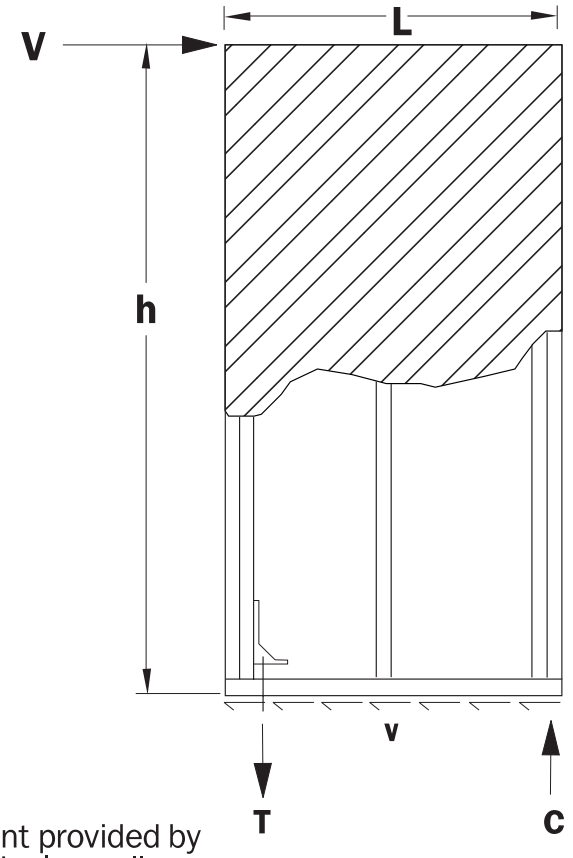

Tension End
Overturning restraint provided by dead load, perpendicular walls, or mechanical anchorage in accordance with 2.2.4

Compression End
Compression force is resisted by stud end bearing on plate

V	=	Shear force (lbs)
L	=	Length (ft)
h	=	Height (ft)
v	=	Required unit shear capacity (plf)
C	=	Compression force in end member (lbs)
T	=	Tension force in end member Required holddown capacity (lbs)

$v = V/L$

$T = v \cdot h$

Copyright © American Wood Council. Downloaded/printed pursuant to License Agreement. No reproduction or transfer authorized.
AMERICAN WOOD COUNCIL

Figure 2.3 Endwall Blocking Detail (Floor or Roof)

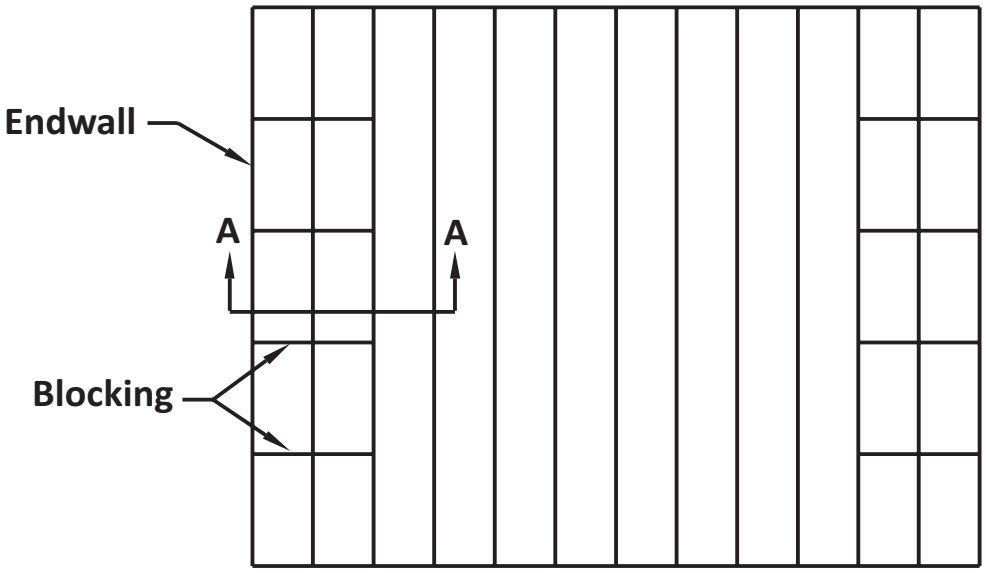

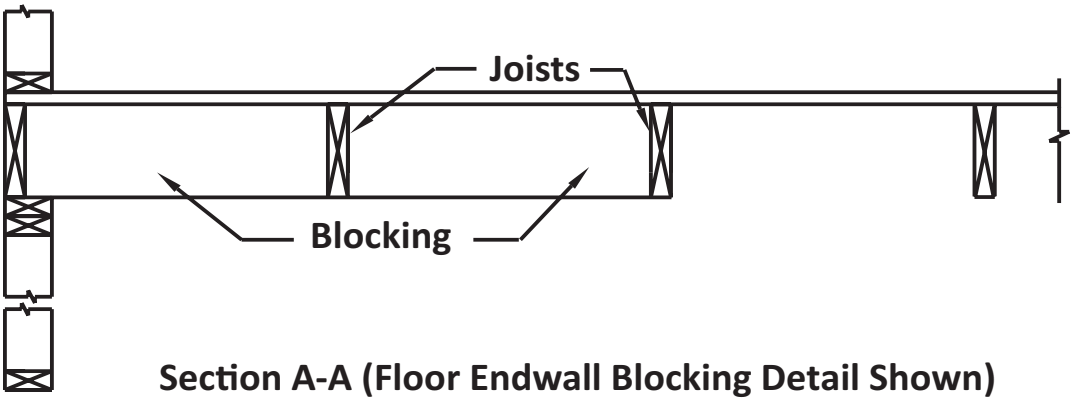

Section A-A (Floor Endwall Blocking Detail Shown)

Copyright © American Wood Council. Downloaded/printed pursuant to License Agreement. No reproduction or transfer authorized.
AMERICAN WOOD COUNCIL

Figure 2.4a **I-Joist Bearing on Wall With Blocking as End Restraint**

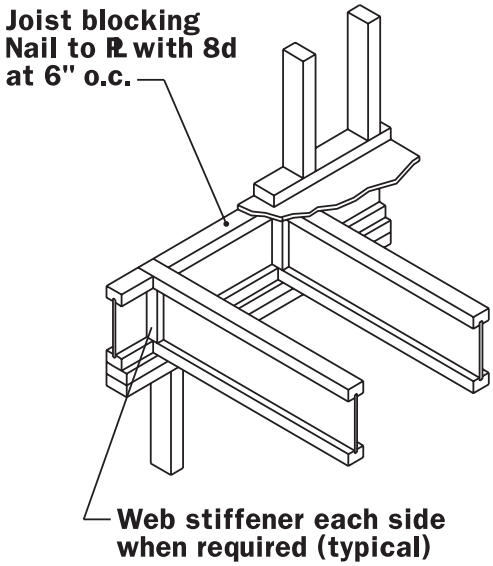

Figure 2.4b **I-Joist Bearing on Wall With Rim Joist as End Restraint**

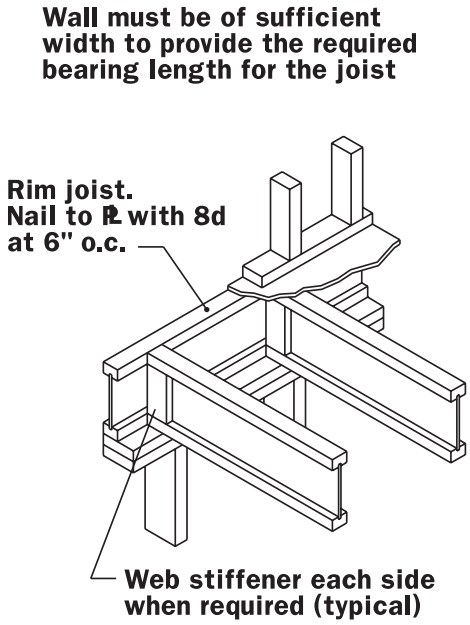

Figure 2.4c **Continuous I-Joist Over a Bearing Wall Supporting a Wall Above**

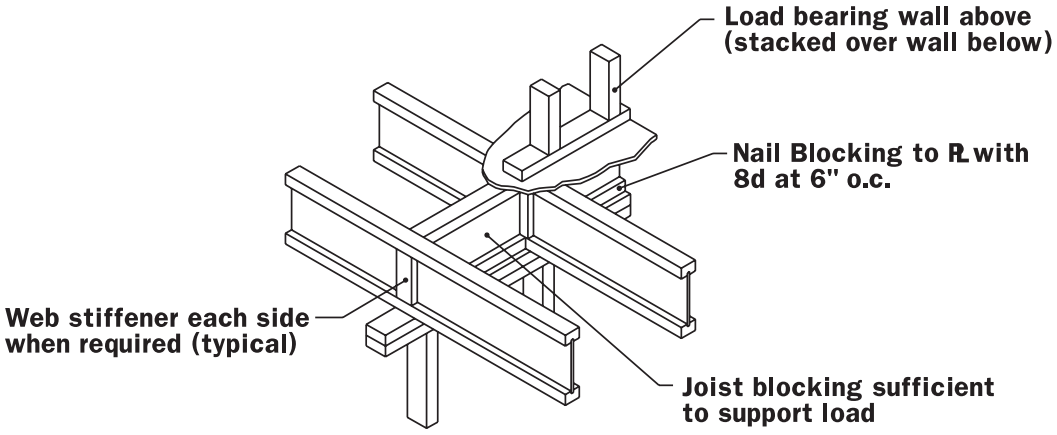

Copyright © American Wood Council. Downloaded/printed pursuant to License Agreement. No reproduction or transfer authorized.

Figure 2.4d Vertical Wall Offset on I-Joist Floor Assembly

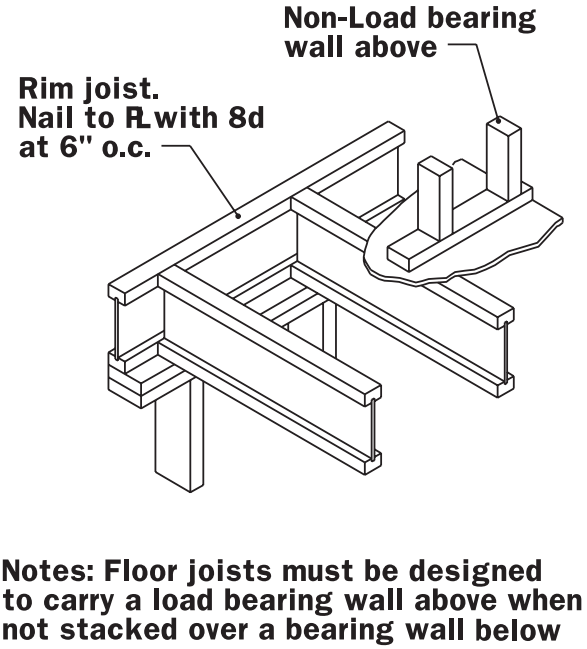

Notes: Floor joists must be designed to carry a load bearing wall above when not stacked over a bearing wall below

Figure 2.4e Continuous Cantilevered I-Joist Over a Bearing Wall Supporting a Wall Above

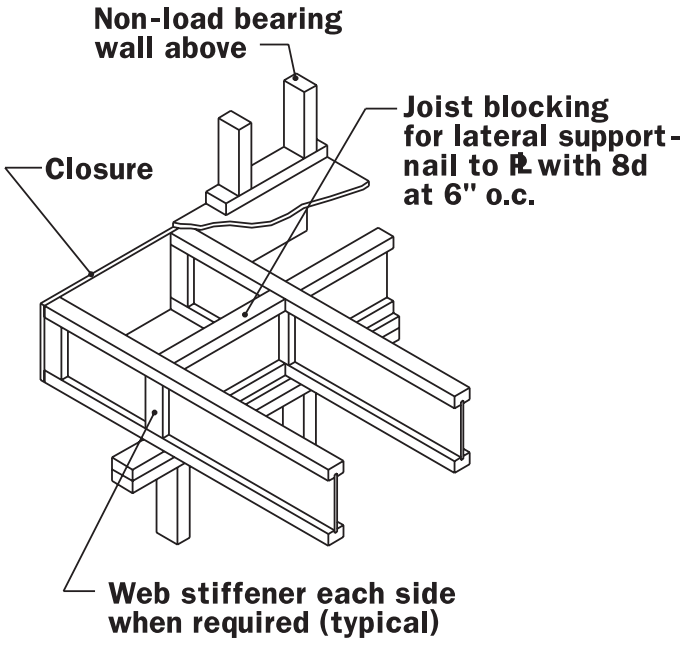

Copyright © American Wood Council. Downloaded/printed pursuant to License Agreement. No reproduction or transfer authorized.

Figure 2.5a **I-Joist Connection to Sill Plate**

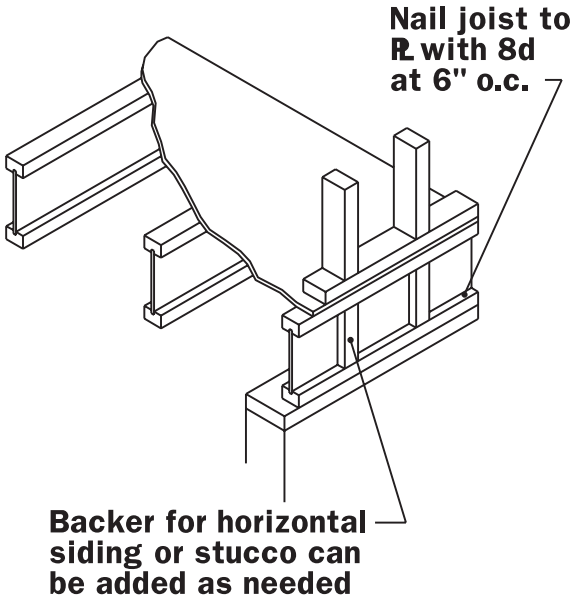

Figure 2.5b **Column Load Transfer Through I-Joist Floor System to Foundation**

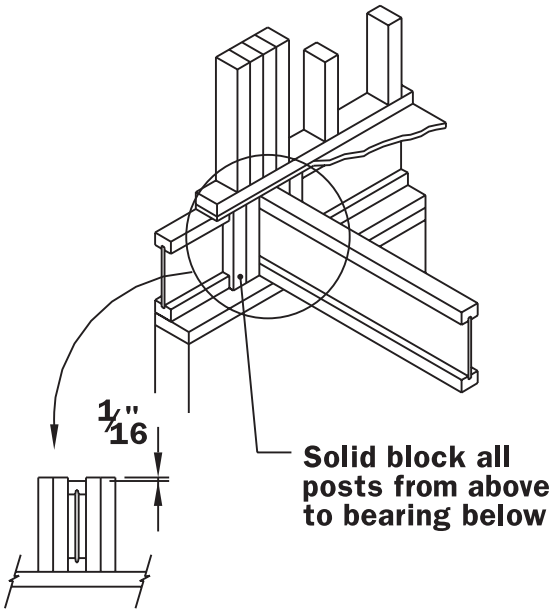

Figure 2.5c **I-Joist Bevel Cut**

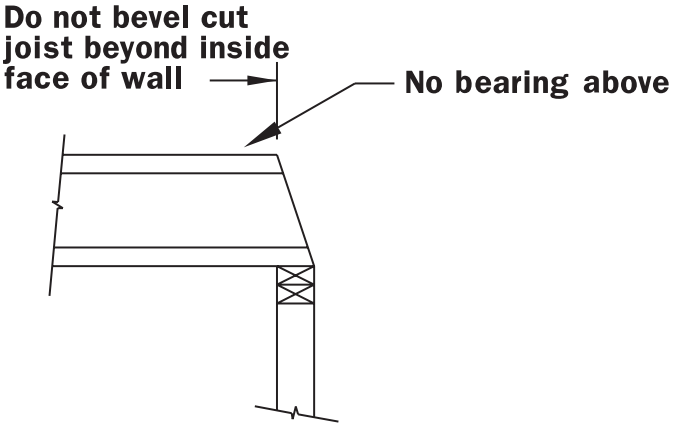

Copyright © American Wood Council. Downloaded/printed pursuant to License Agreement. No reproduction or transfer authorized.
AMERICAN WOOD COUNCIL

Figure 2.6a I-Joist Floor Header

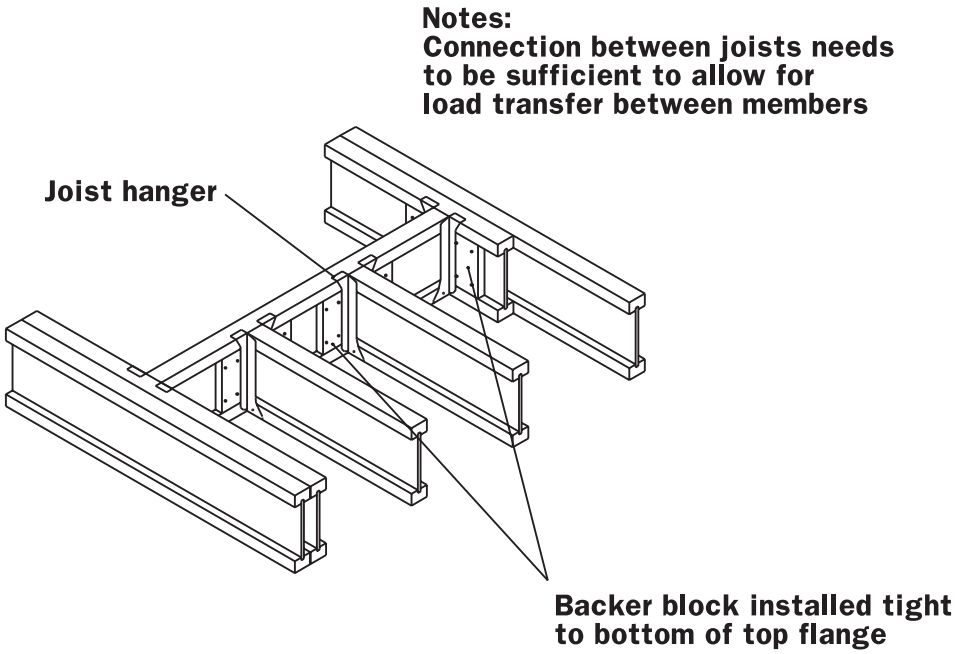

Figure 2.6b I-Joist Floor Header With Filler Block Between Double Trimmers

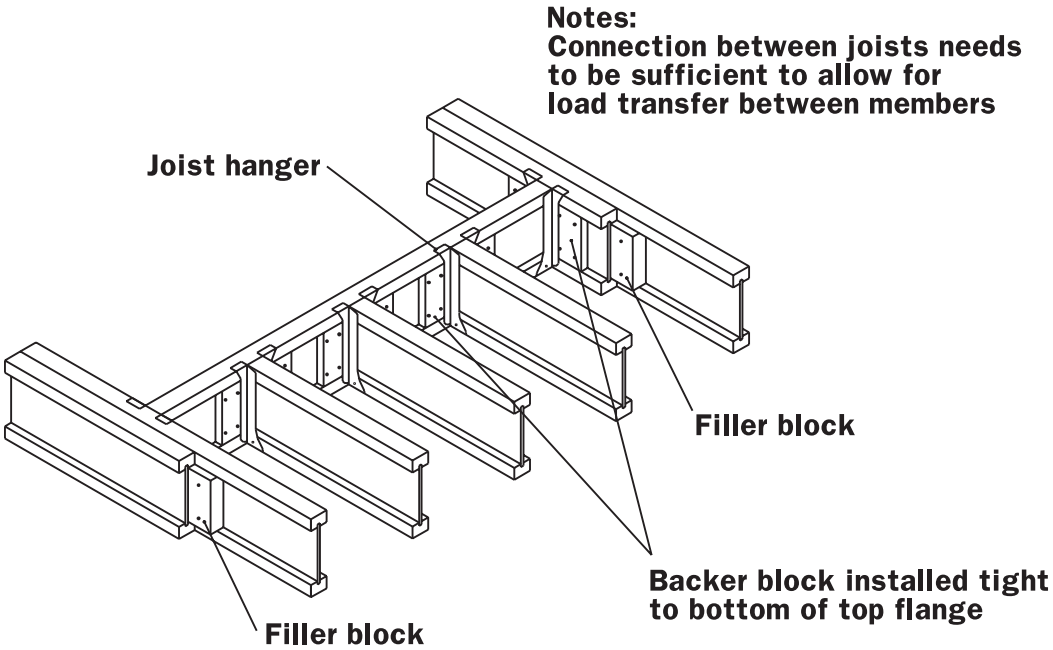

Copyright © American Wood Council. Downloaded/printed pursuant to License Agreement. No reproduction or transfer authorized.
AMERICAN WOOD COUNCIL

Figure 2.6c Stair Stringer Connection to I-Joist Floor System

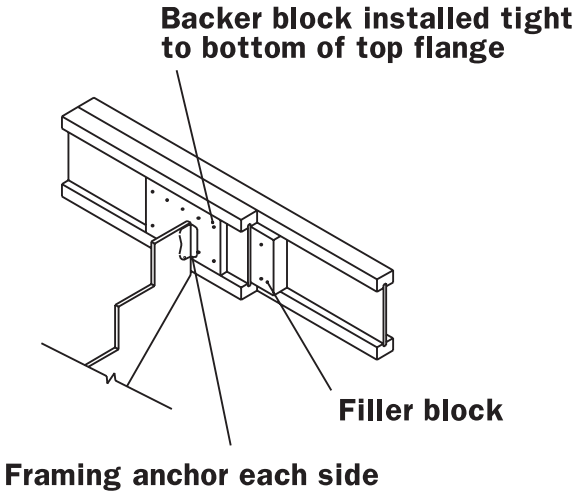

Note:
Connection between joists needs to be sufficient to allow for load transfer between members

Figure 2.7 I-Joist Supported by Hangers Attached to Interior Beam

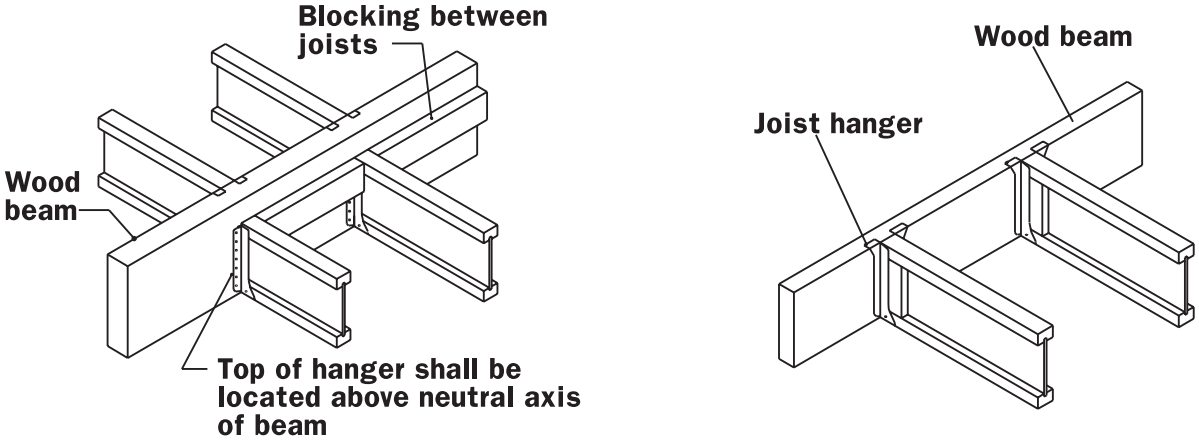

Note:
Web stiffeners each side may be required for joist stability, hanger compatibility, or joist reaction

Copyright © American Wood Council. Downloaded/printed pursuant to License Agreement. No reproduction or transfer authorized.
AMERICAN WOOD COUNCIL

Figure 2.8 I-Joist Web Stiffener Attachment at Bearing Points

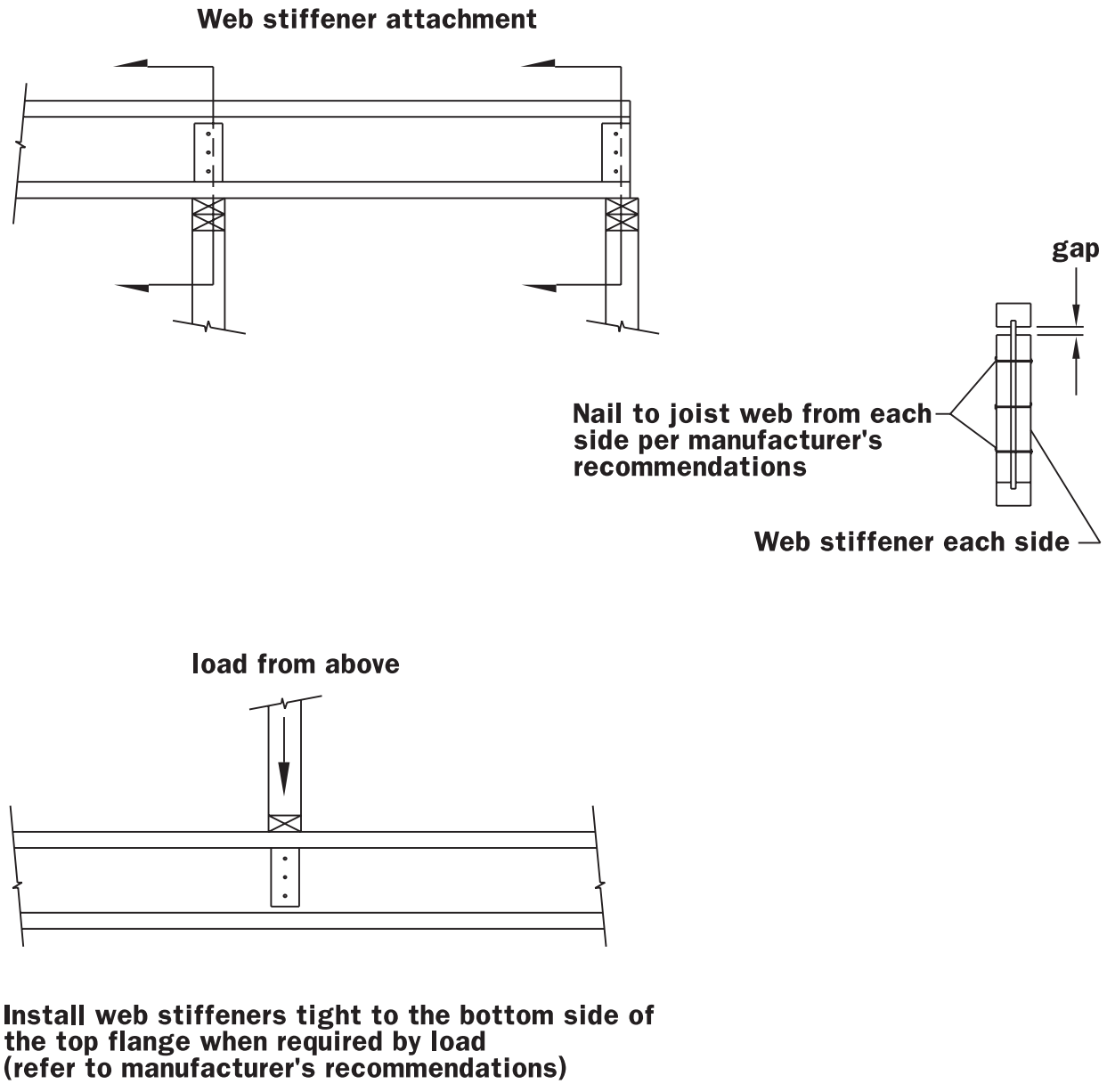

Copyright © American Wood Council. Downloaded/printed pursuant to License Agreement. No reproduction or transfer authorized.

Figure 2.9a Typical I-Joist Cantilever Supporting Uniform Loads

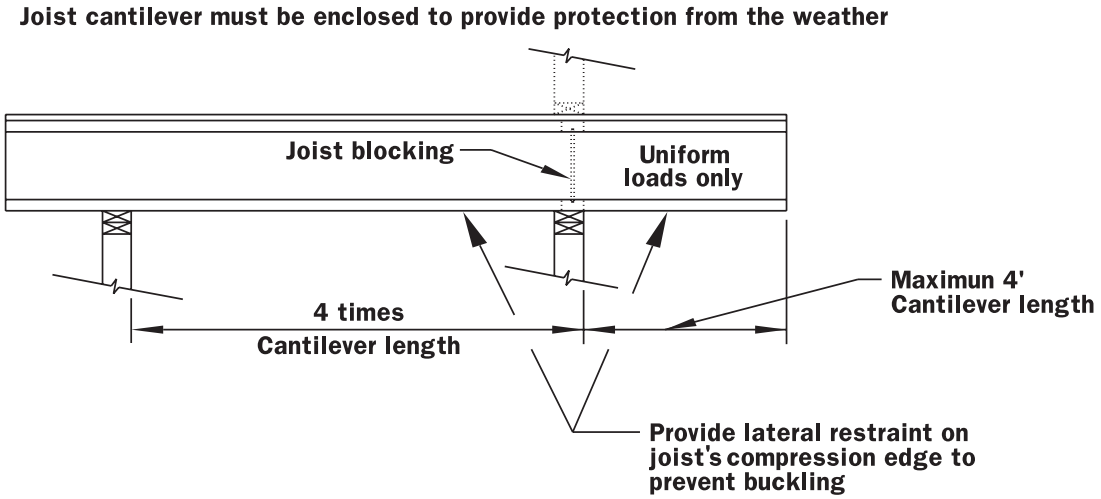

Joist typically can be cantilevered up to 1/4 the adjacent span if not supporting concentrated loads on the cantilever

Figure 2.9b Lumber Cantilever Attached to I-Joist

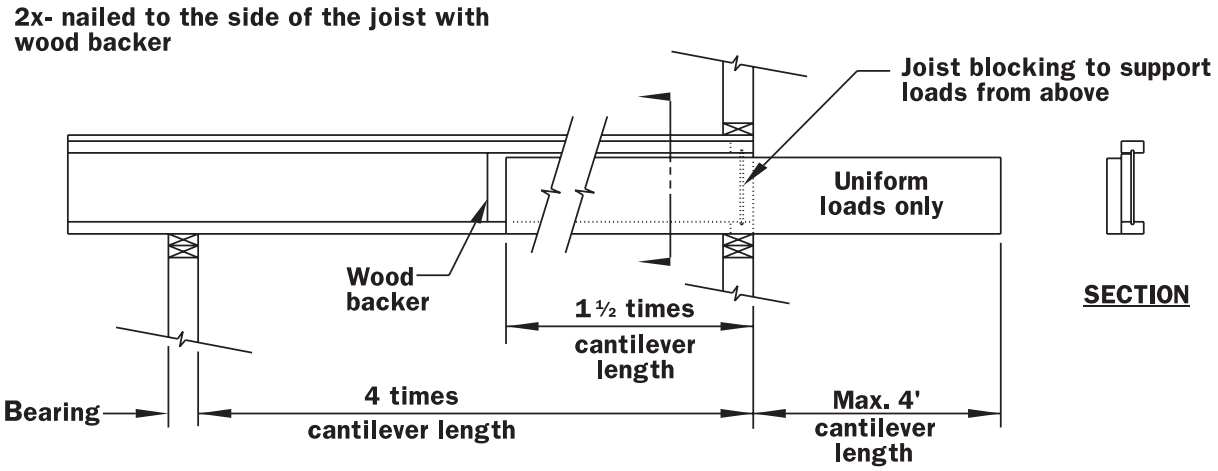

Copyright © American Wood Council. Downloaded/printed pursuant to License Agreement. No reproduction or transfer authorized.

Figure 2.10a **Rafter Ridge Blocking and Uplift Strap for I-Joist Bearing on a Ridge Beam**

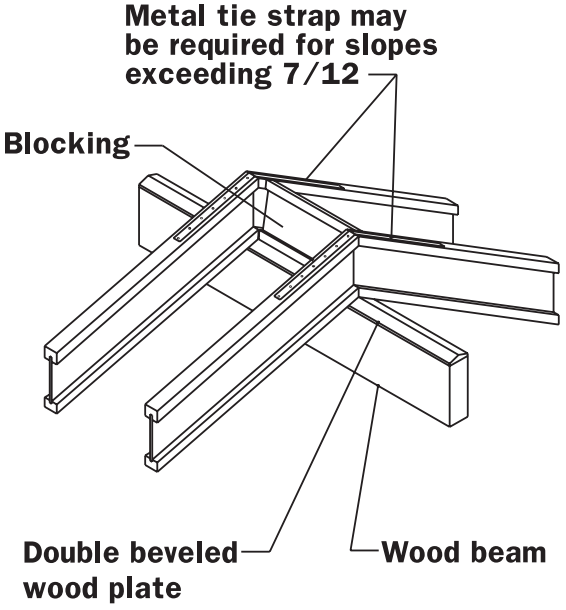

Figure 2.10b **Hanger and Uplift Strap for I-Joist Attached to Side of Ridge Beam**

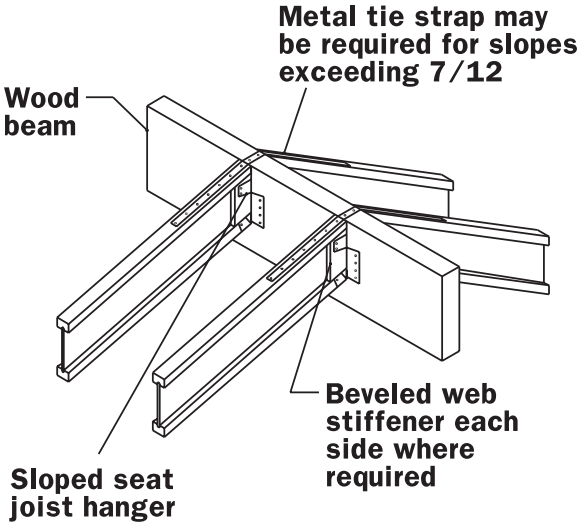

Figure 2.10c **Filler Block and Ridge Blocking for I-Joist Bearing on Ridge Beam**

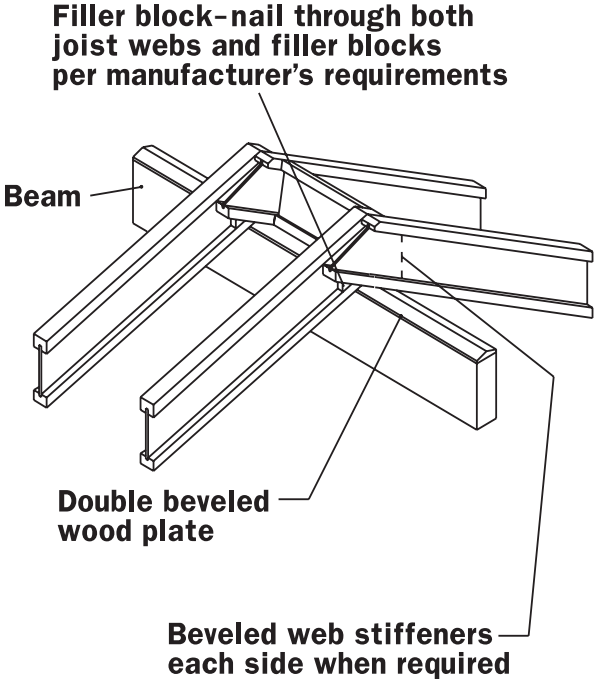

Figure 2.10d **I-Joist Connection to Header at Roof Opening**

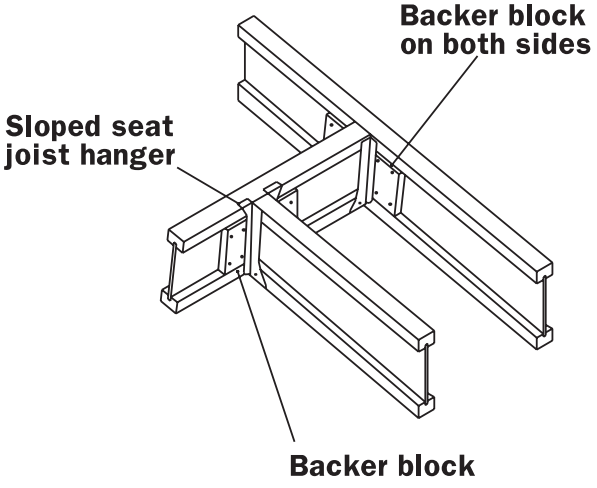

Copyright © American Wood Council. Downloaded/printed pursuant to License Agreement. No reproduction or transfer authorized.

Figure 2.11a I-Joist Roof Rafter Bearing on Exterior Wall With Top Chord Overhang

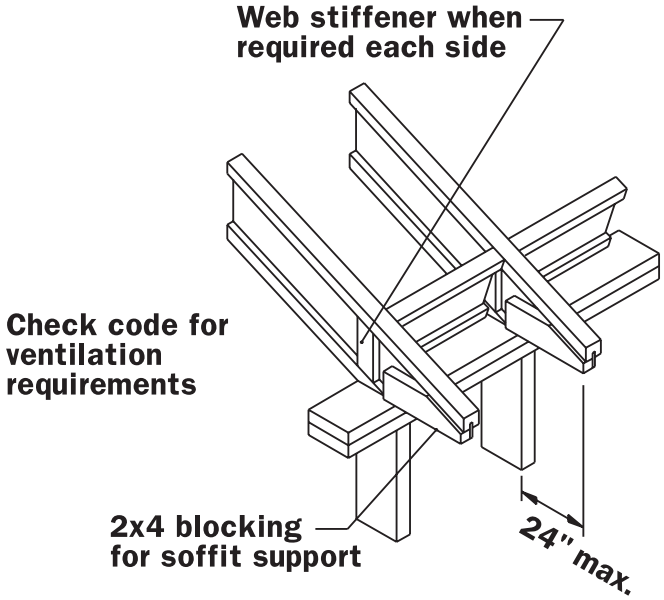

Figure 2.11b I-Joist Roof Rafter Bearing on Exterior Wall With Lumber Overhang

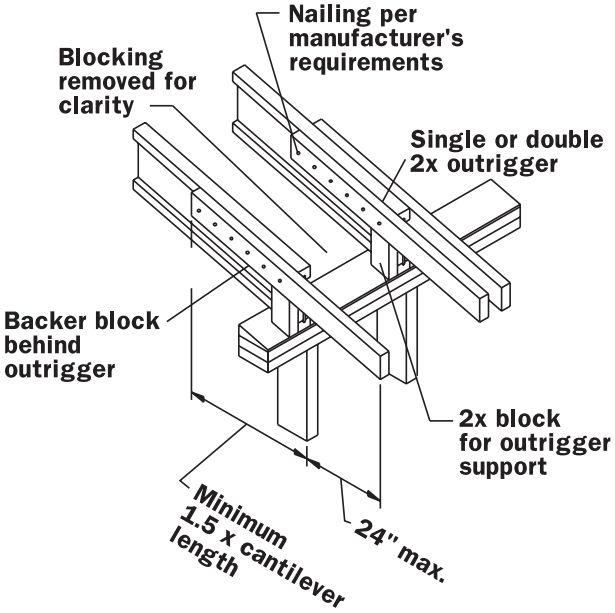

Figure 2.11c I-Joist Roof Rafter Bearing on Beveled Plate

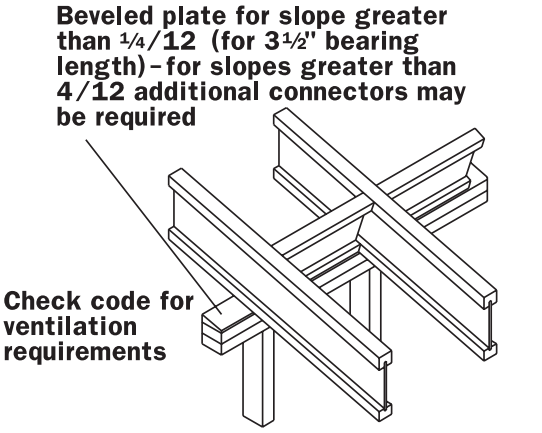

Special sloped seat bearing hardware can be used in lieu of beveled plate in some sloped applications

Copyright © American Wood Council. Downloaded/printed pursuant to License Agreement. No reproduction or transfer authorized.

Figure 2.11d **I-Joist Roof Rafter Bearing on Exterior Wall With Top Chord and Lumber Overhang**

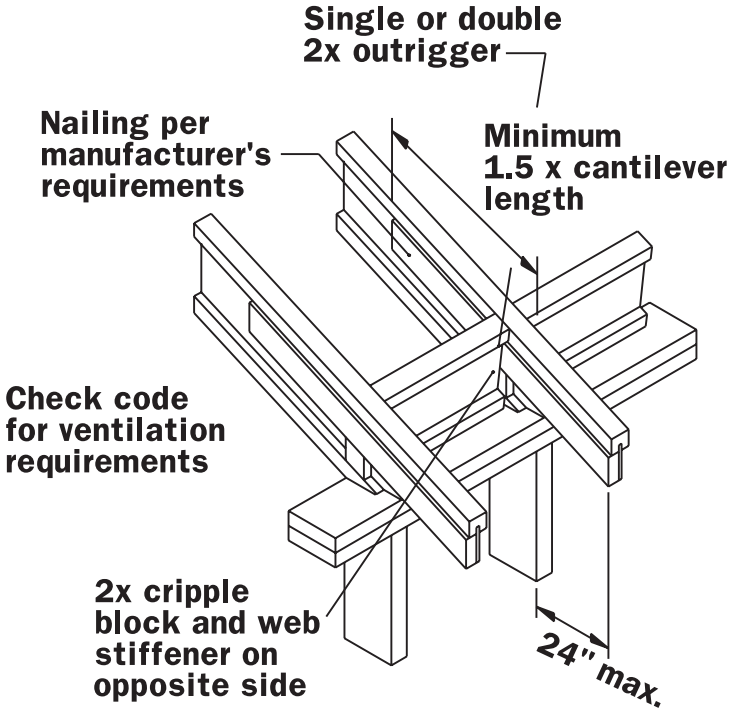

Figure 2.11e **Gable End Rake Overhang Outlookers Attached to I-Joist Roof Rafter**

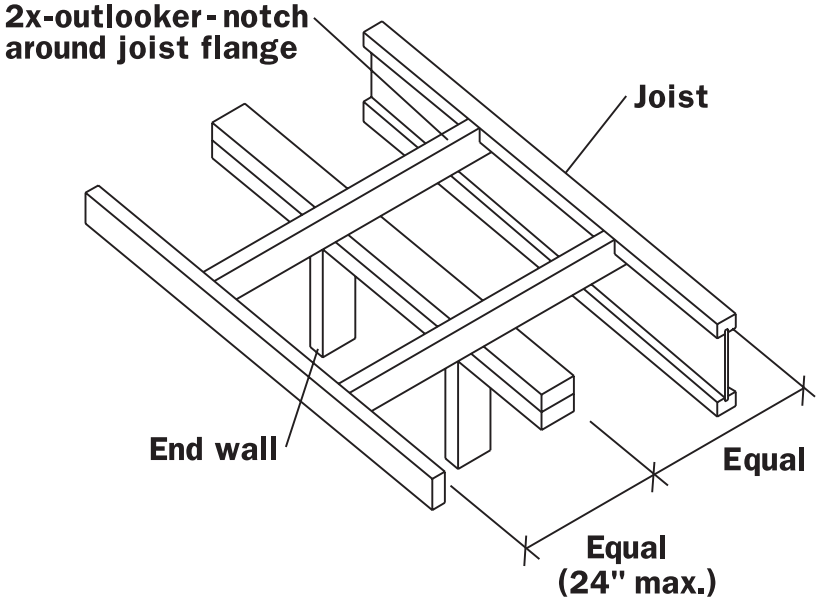

Copyright © American Wood Council. Downloaded/printed pursuant to License Agreement. No reproduction or transfer authorized.

Figure 2.12a Bottom Chord Bearing on Exterior Wall

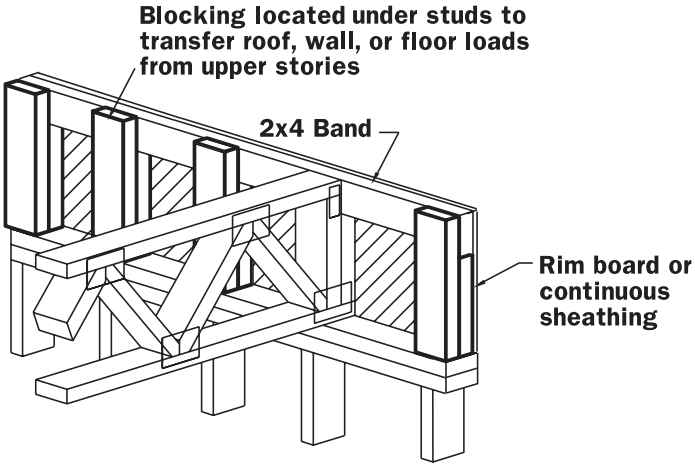

Figure 2.12b Bottom Chord Bearing on Interior Wall

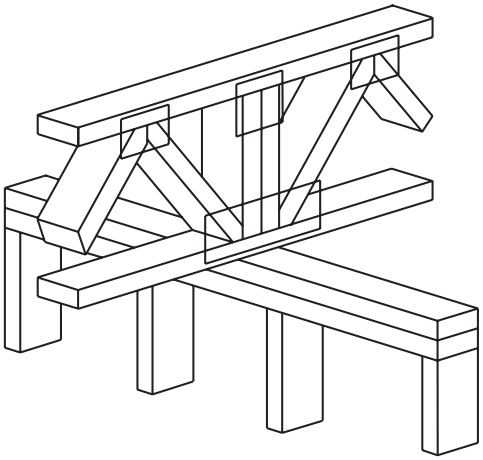

Figure 2.12c Top Chord Bearing on Interior Wall

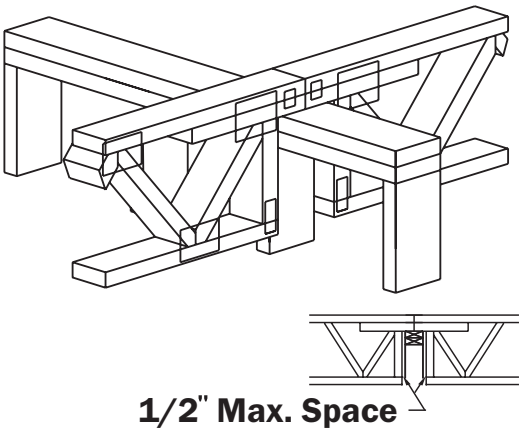

Figure 2.12d Top Chord Bearing on Exterior Wall

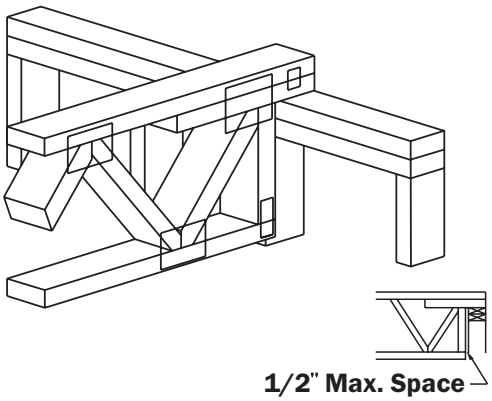

Figure 2.12e Interior Pocket Bearing

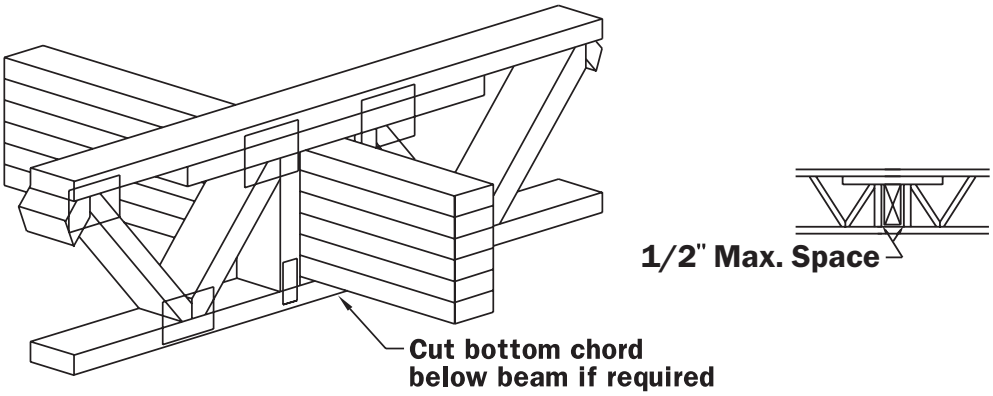

Copyright © American Wood Council. Downloaded/printed pursuant to License Agreement. No reproduction or transfer authorized.
AMERICAN WOOD COUNCIL

Figure 2.12f Top Chord Bearing Truss on Ledger

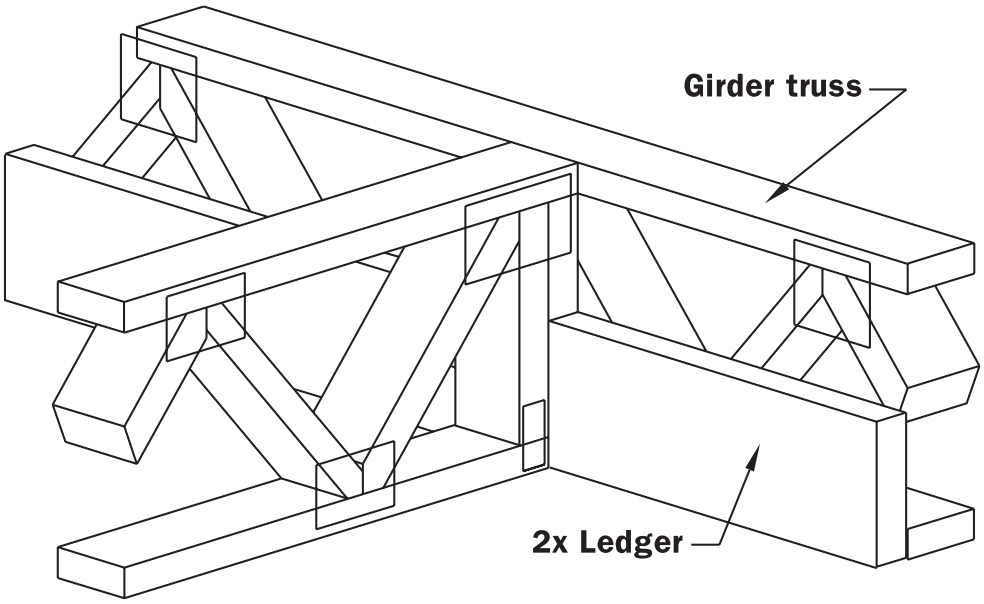

Figure 2.12g Bottom Chord Bearing Truss in Hanger

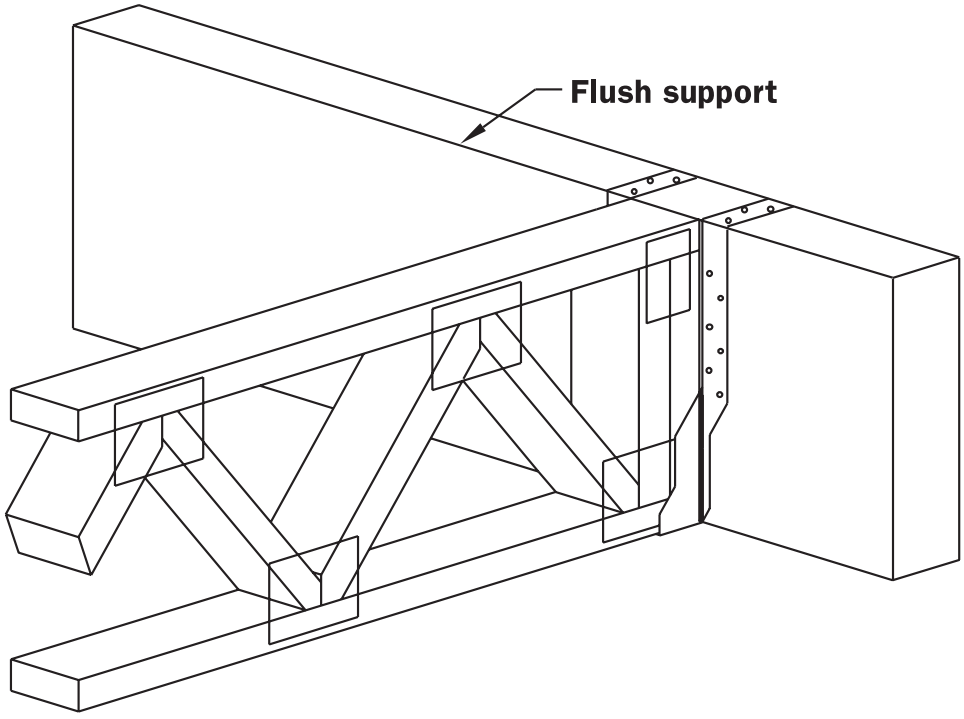

Copyright © American Wood Council. Downloaded/printed pursuant to License Agreement. No reproduction or transfer authorized.

Figure 2.13a Truss Cantilever Detail

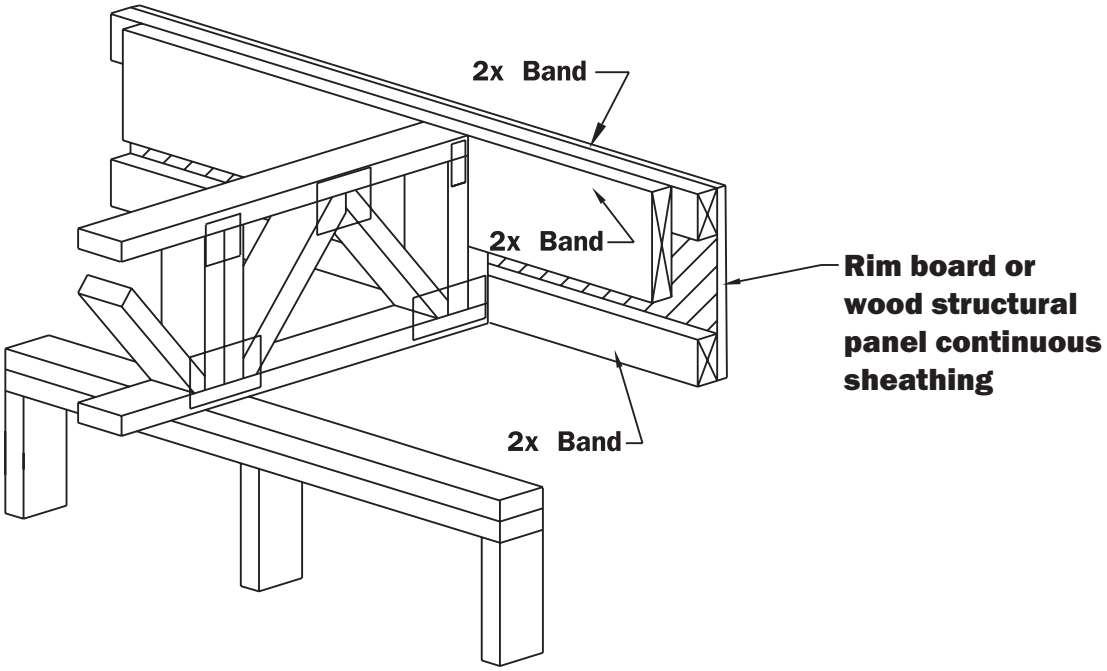

Figure 2.13b Truss Cantilever Detail

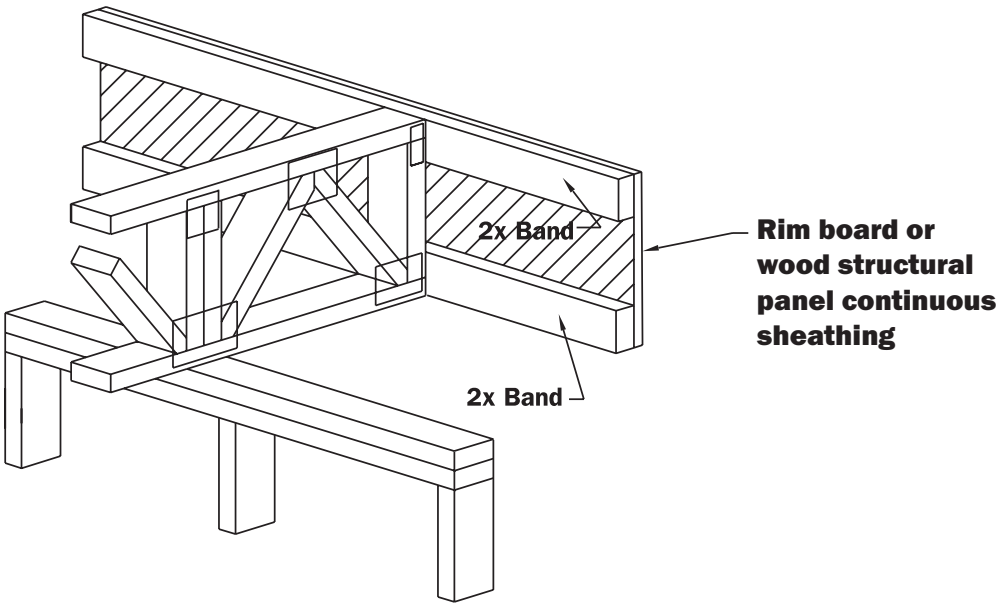

Copyright © American Wood Council. Downloaded/printed pursuant to License Agreement. No reproduction or transfer authorized.

Figure 2.14 Truss Strongback Details

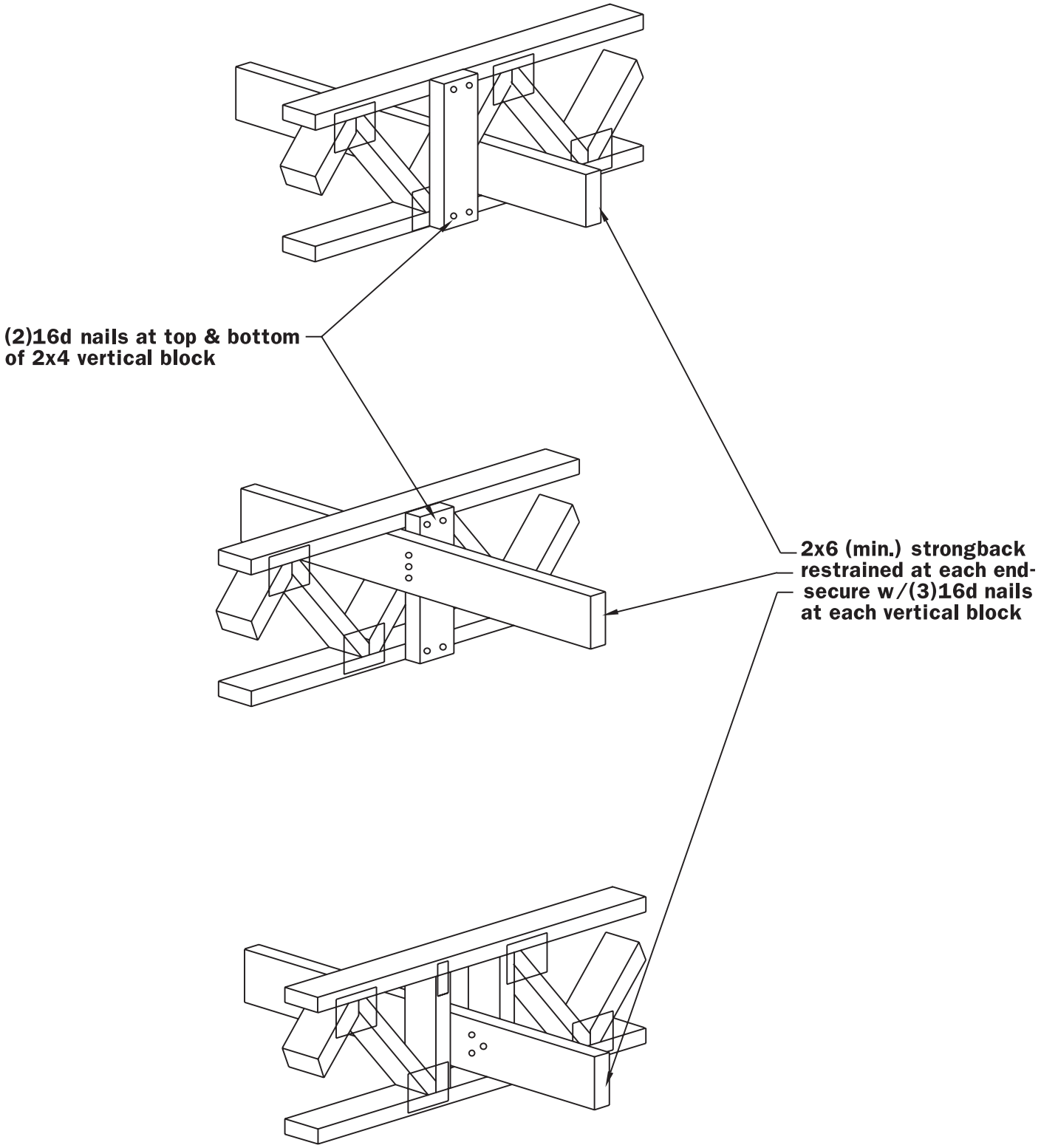

STRONGBACKS MAY BE USED TO ENHANCE FLOOR PERFORMANCE

Copyright © American Wood Council. Downloaded/printed pursuant to License Agreement. No reproduction or transfer authorized.
AMERICAN WOOD COUNCIL

Figure 2.15a Blocking in Floor Space at End Bearing Truss With Band

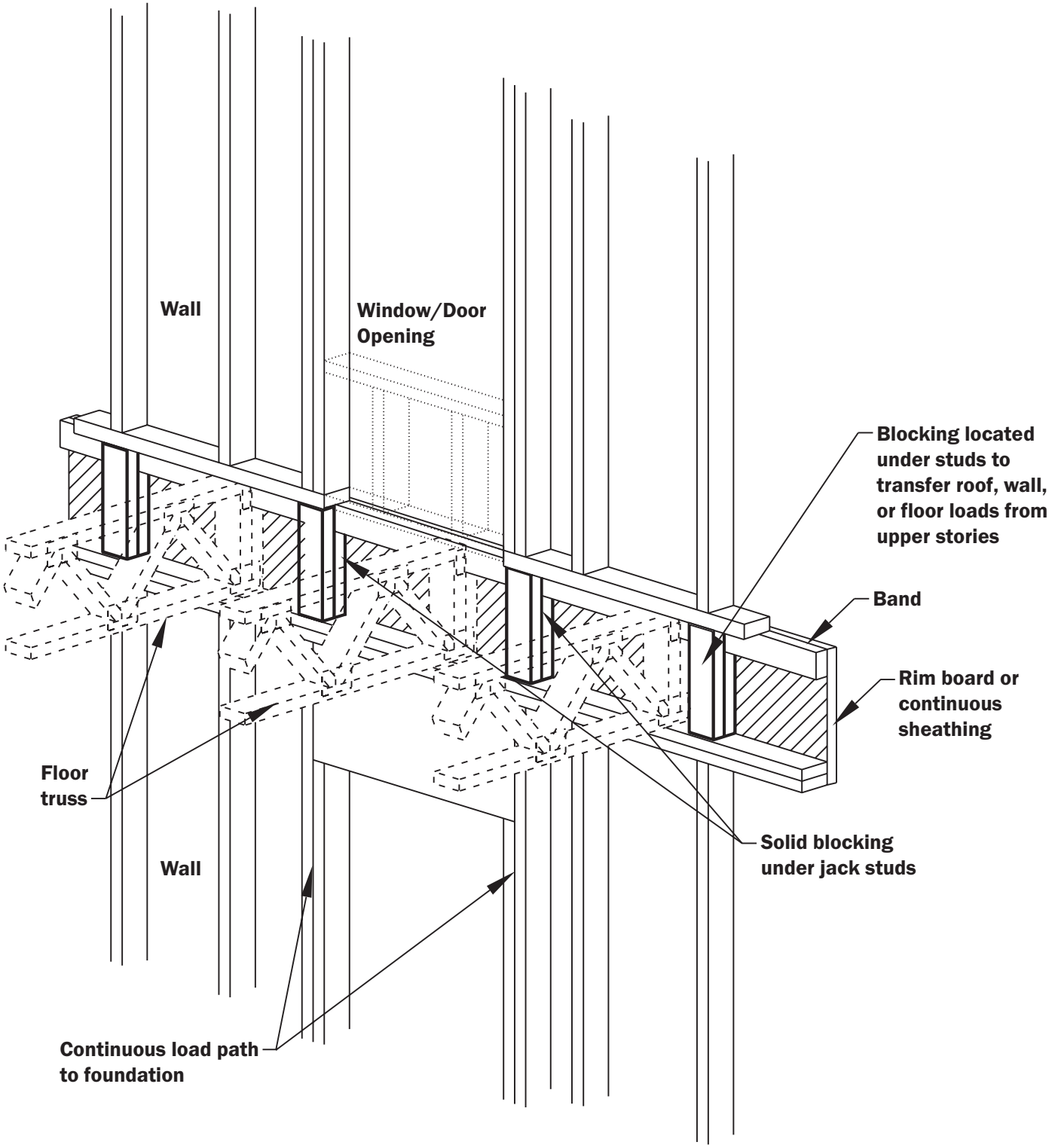

Copyright © American Wood Council. Downloaded/printed pursuant to License Agreement. No reproduction or transfer authorized.

Figure 2.15b Blocking in Floor Space at Interior Loadbearing Walls

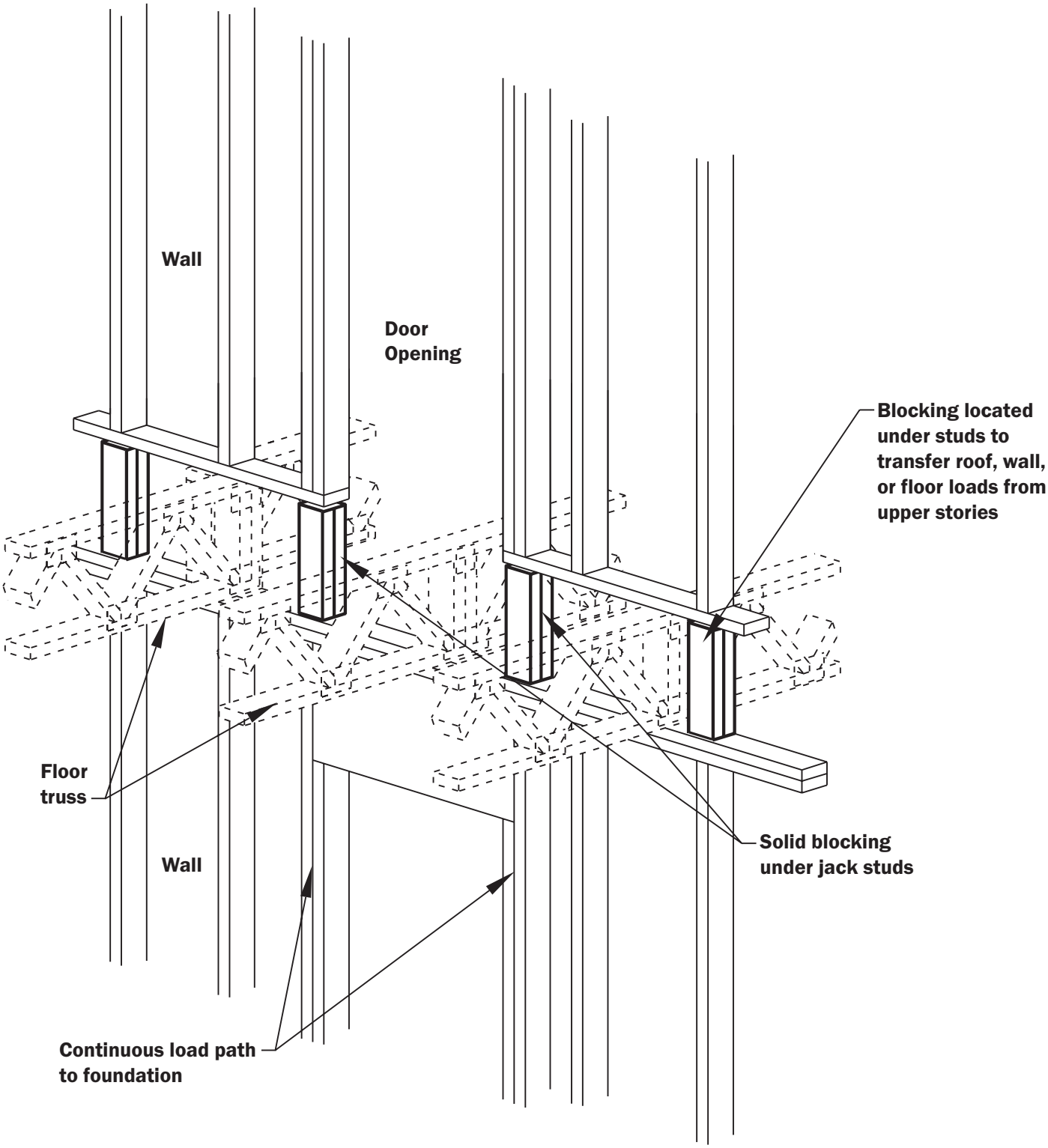

Copyright © American Wood Council. Downloaded/printed pursuant to License Agreement. No reproduction or transfer authorized.

Figure 2.15c Blocking in Floor Space at Floor Elevation Change

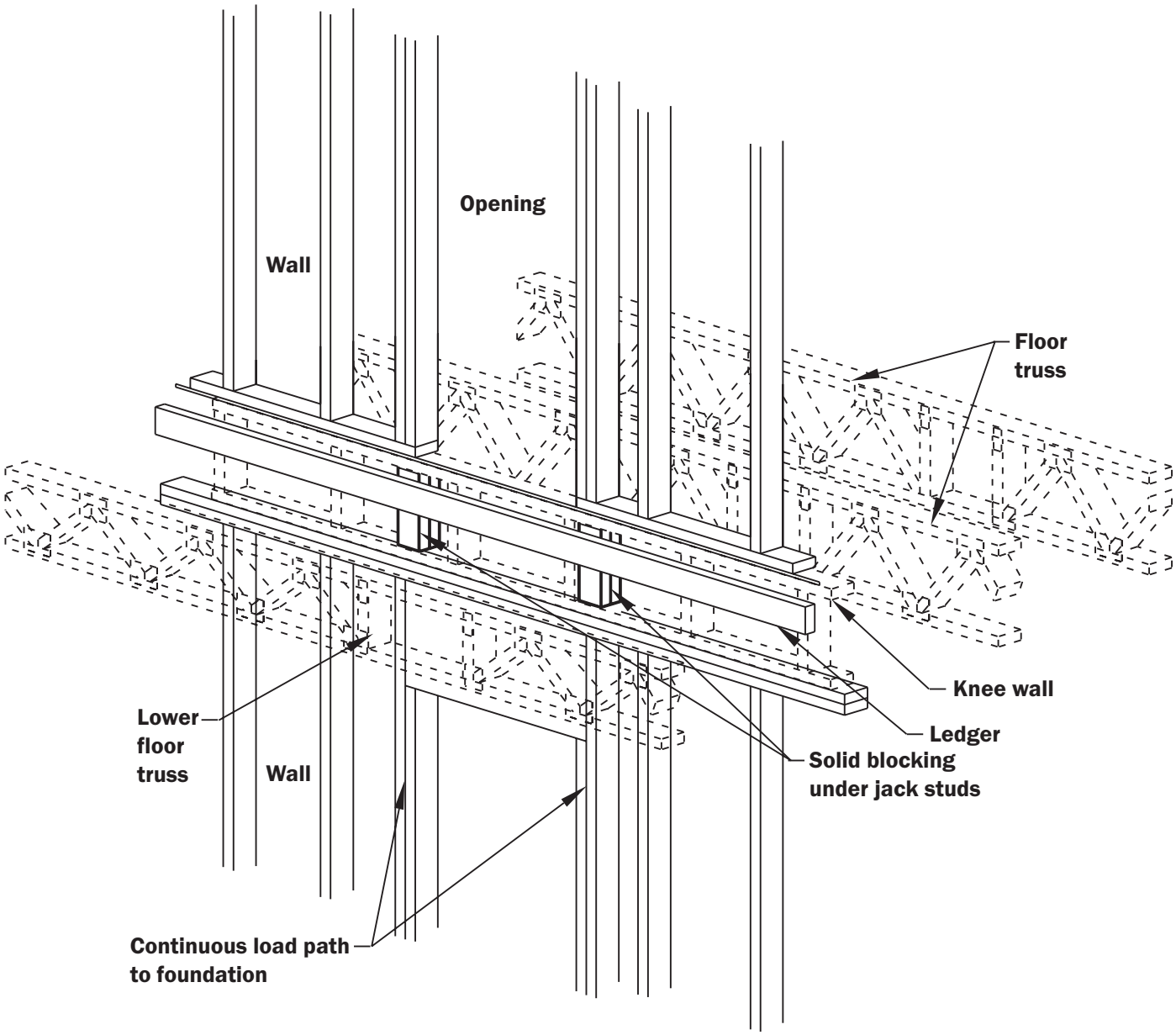

Copyright © American Wood Council. Downloaded/printed pursuant to License Agreement. No reproduction or transfer authorized.

Figure 2.16a Roof Truss Overhang

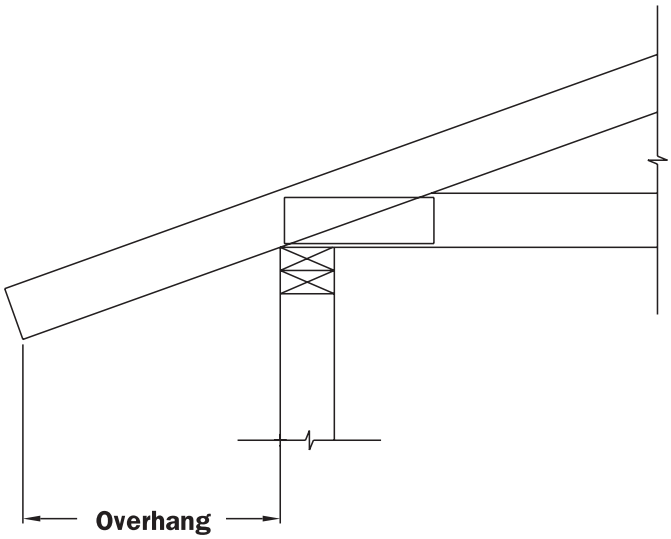

Figure 2.16b Roof Truss Overhang and Cantilever

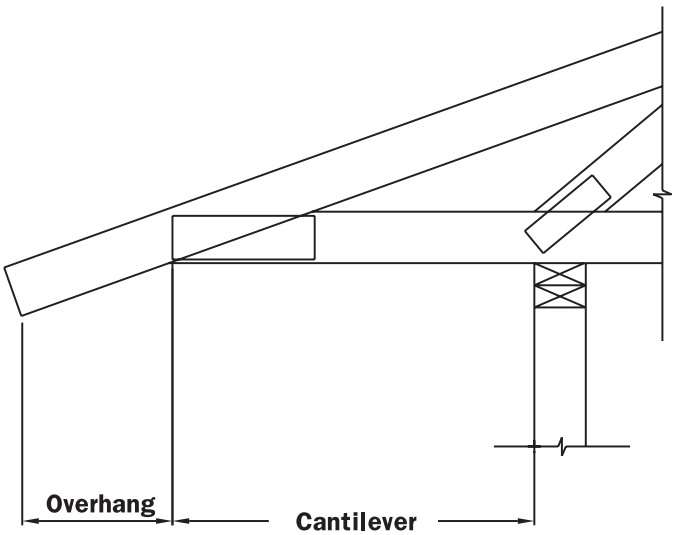

Figure 2.16c Roof Truss Overhang and Cantilever

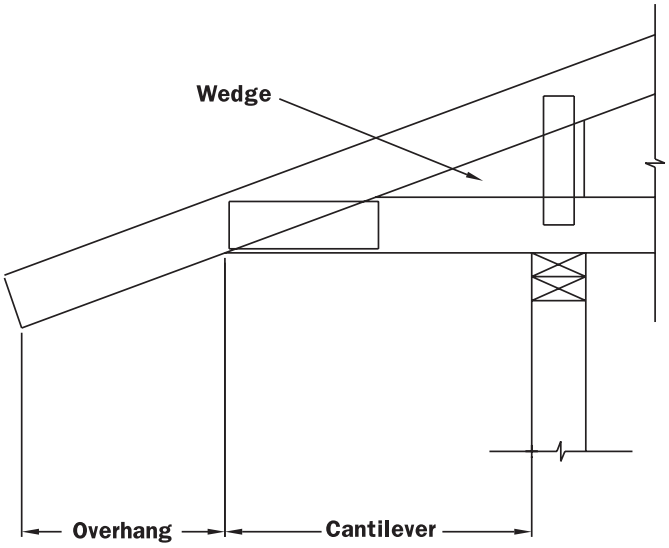

Figure 2.16d Roof Truss Overhang With Level Return

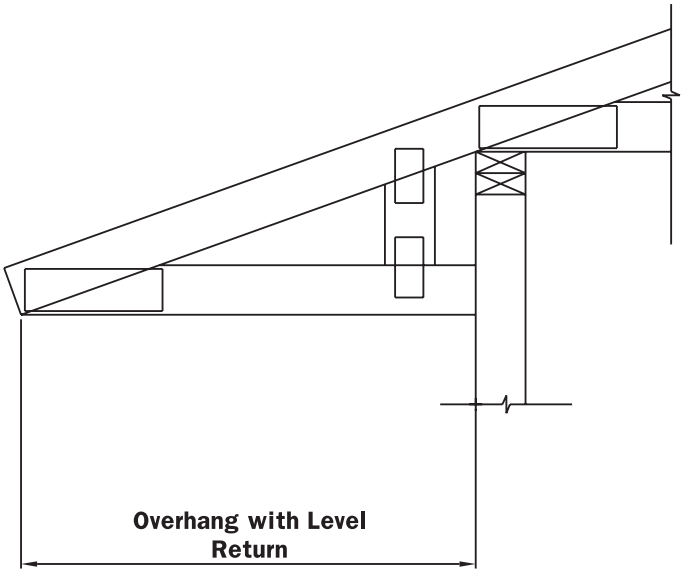

Copyright © American Wood Council. Downloaded/printed pursuant to License Agreement. No reproduction or transfer authorized.
AMERICAN WOOD COUNCIL

Figure 2.17a Plan and Isometric of Jack Truss System

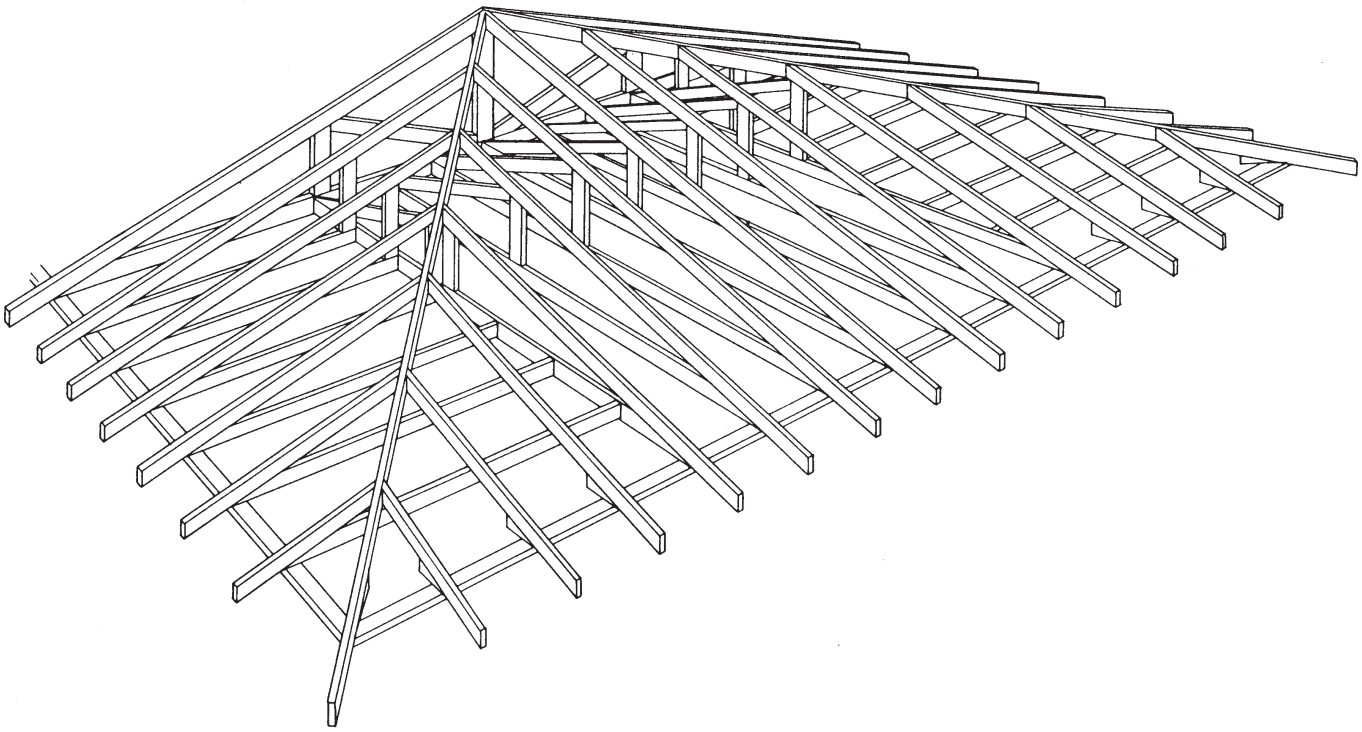

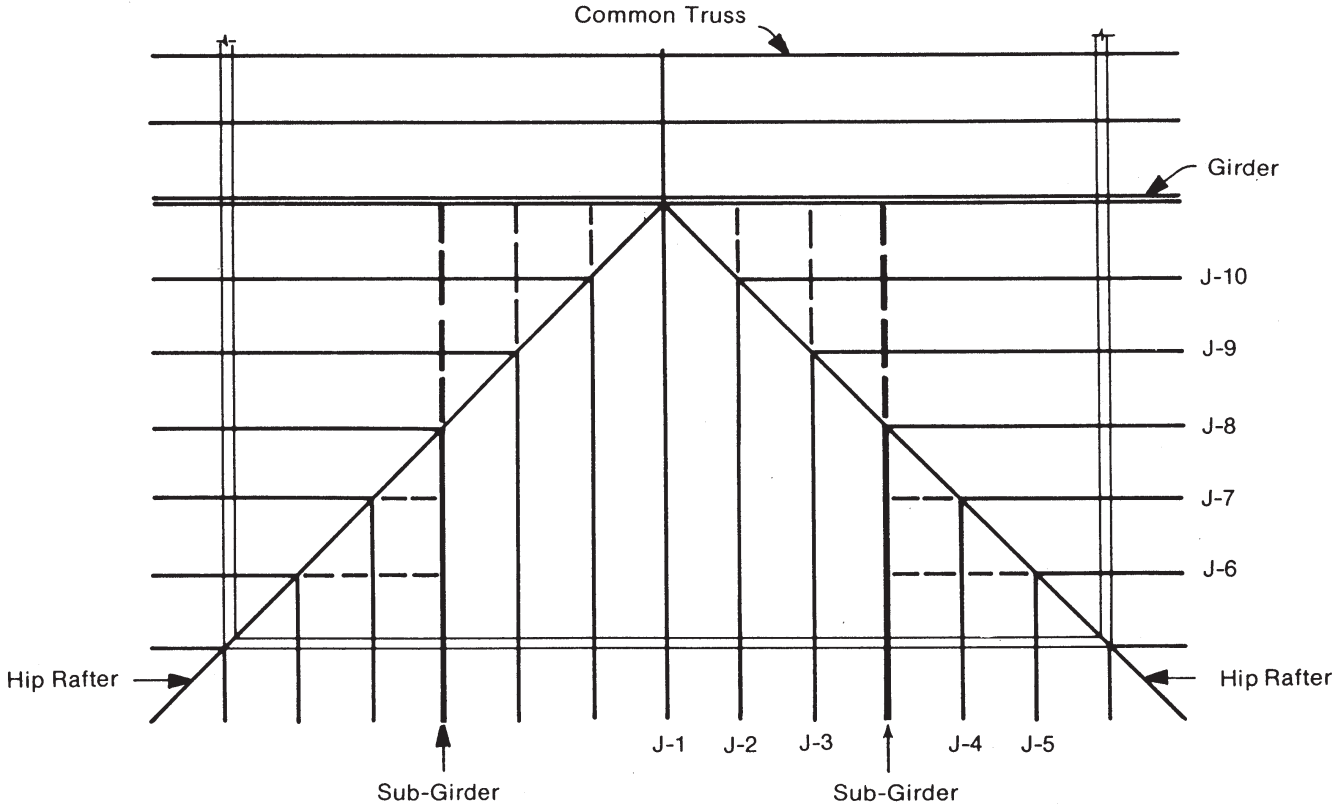

Copyright © American Wood Council. Downloaded/printed pursuant to License Agreement. No reproduction or transfer authorized.

Figure 2.17b Plan and Isometric of Step Down Truss System

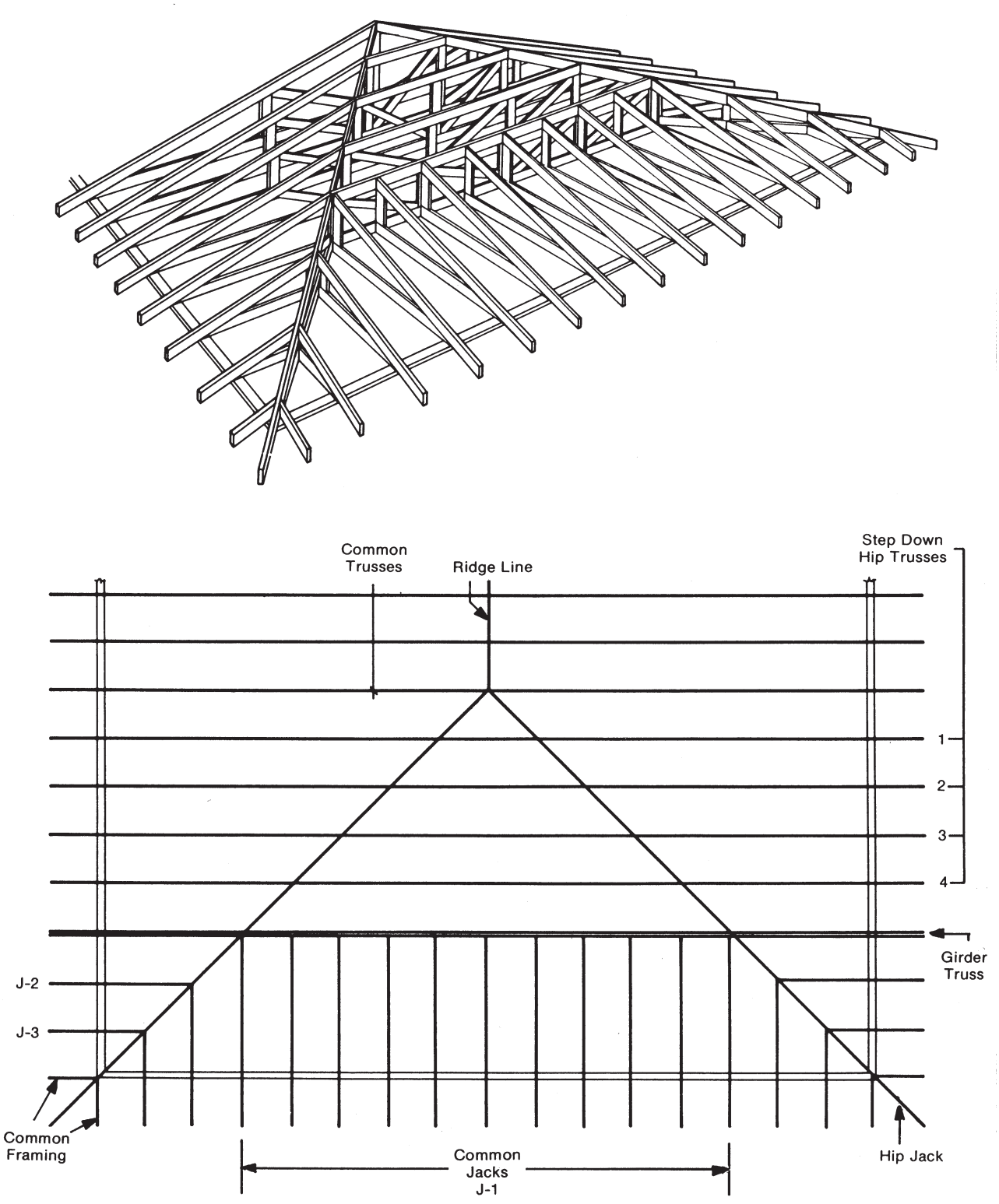

Plan and Isometric of Step Down System

Copyright © American Wood Council. Downloaded/printed pursuant to License Agreement. No reproduction or transfer authorized.

Figure 2.18a Roof Intersection with Valley Fill

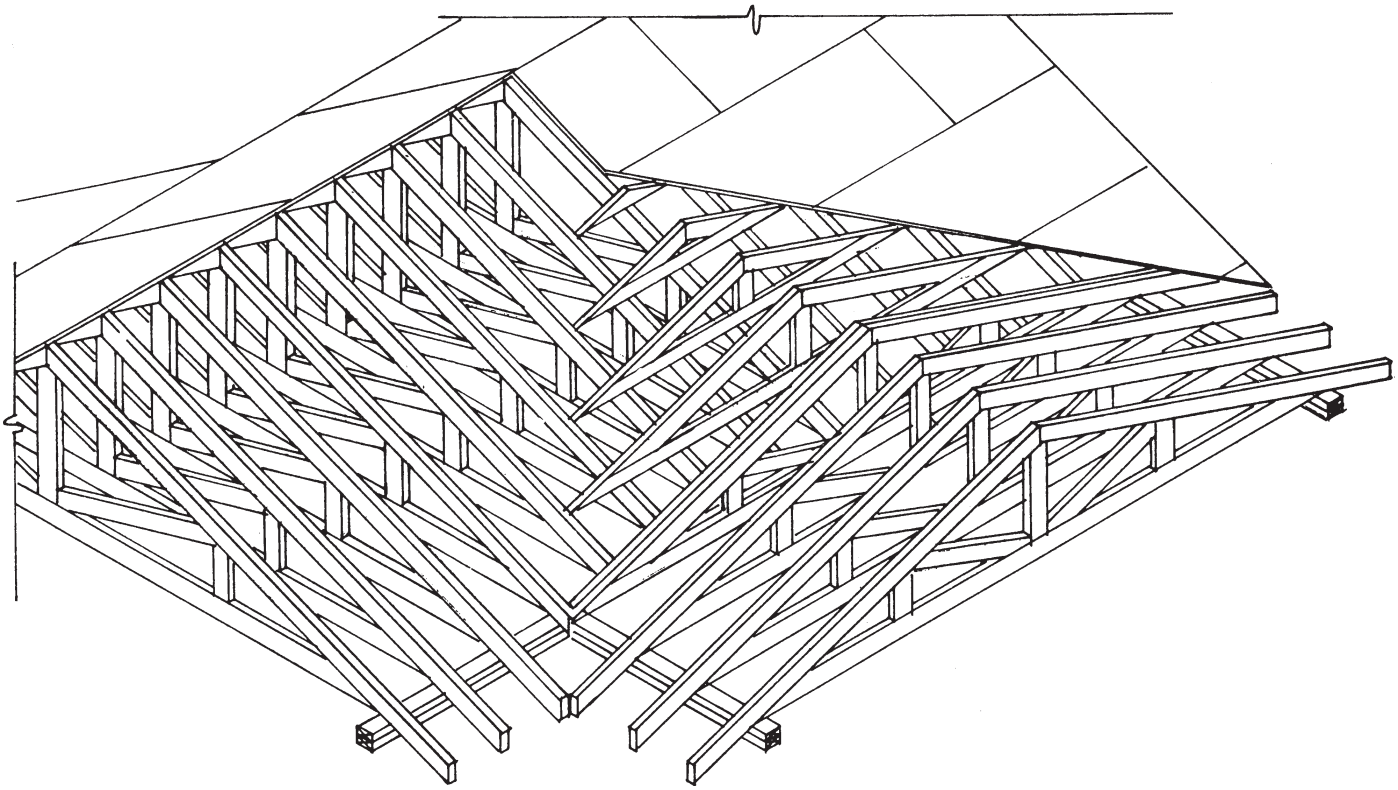

Figure 2.18b Total Roof Truss System

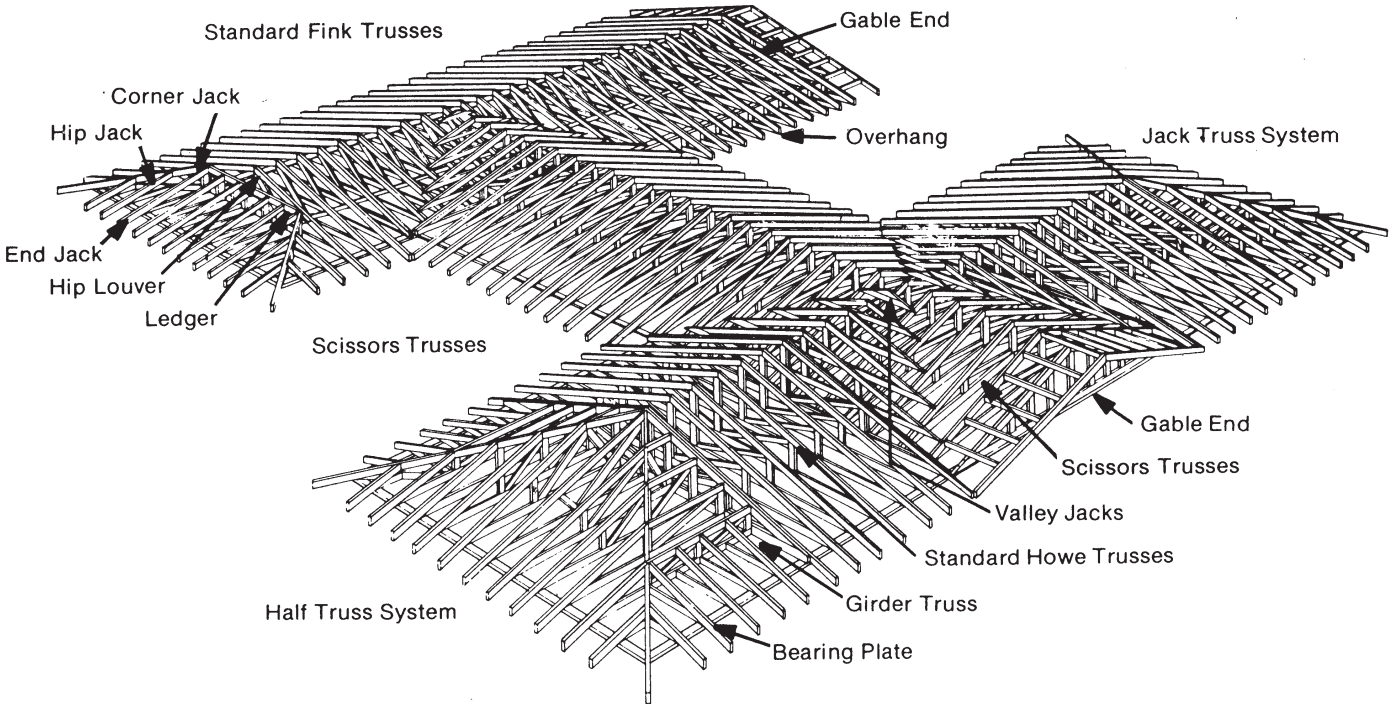

Copyright © American Wood Council. Downloaded/printed pursuant to License Agreement. No reproduction or transfer authorized.
AMERICAN WOOD COUNCIL

List of Tables

2.1 Lateral Framing Connection Loads from Wind ... 62

2.2A Uplift Connection Loads from Wind ... 63

2.2B Ridge Connection Loads from Wind ... 64

2.2C Rake Overhang Outlooker Uplift Connection Loads ... 65

2.3 Thrust Connection Loads ... 66

2.4 Roof and Wall Sheathing Suction Loads ... 67

2.5A Lateral Diaphragm Loads from Wind - Perpendicular to Ridge ... 68

2.5B Lateral Diaphragm Loads from Wind - Parallel to Ridge ... 69

2.5C Lateral Diaphragm Loads from Wind - Parallel to Ridge (Attic/Floor/Ceiling) ... 71

2.6 Lateral Loads from Seismic ... 73

2.7A Floor Joist Spans for 30 psf Live Load ... 74

2.7B Floor Joist Spans for 40 psf Live Load ... 75

2.7C Floor Joist Bearing Stresses for Floor Loads ... 76

2.8A Floor Framing Capacity Requirements for 30 psf Live Load ... 77

2.8B Floor Framing Capacity Requirements for 40 psf Live Load ... 78

2.9A Exterior Wall Stud Bending Stresses from Wind Loads ... 80

2.9B Exterior Wall Stud Compression Stresses ... 84

2.9C Interior Loadbearing Wall Stud Compression Stresses from Live Loads ... 86

2.10 Exterior Wall Stud Wind Loads (Normal to the Wall Surface) ... 87

2.11 Loadbearing Wall Loads from Snow or Live Loads ... 88

2.12A1-2 Ceiling Joist Spans for 10 psf Live Load ... 89

2.12B1-2 Ceiling Joist Spans for 20 psf Live Load ... 91

2.13A1-2 Ceiling Joist Framing Capacity Requirements (without storage) ... 93

2.13B1-2 Ceiling Joist Framing Capacity Requirements (with limited storage) ... 95

2.14A Rafter Spans for 20 psf Live Load ... 98

2.14B Rafter Spans for 30 psf Ground Snow Load ... 100

2.14C Rafter Spans for 50 psf Ground Snow Load ... 101

2.14D Rafter Spans for 70 psf Ground Snow Load ... 102

2.15A Roof Framing Capacity Requirements for 20 psf Roof Live Load ... 104

2.15B Roof Framing Capacity Requirements for 30 psf Ground Snow Load ... 106

2.15C Roof Framing Capacity Requirements for 50 psf Ground Snow Load ... 107

2.15D Roof Framing Capacity Requirements for 70 psf Ground Snow Load ... 108

2.16 Roof Framing Wind Loads (Normal to the Roof Surface) ... 110

2.17 Ridge Beam Capacity Requirements for Interior Center Bearing Roof and Ceiling ... 110

2.18 Hip and Valley Beam Capacity Requirements ... 111

Copyright © American Wood Council. Downloaded/printed pursuant to License Agreement. No reproduction or transfer authorized.
AMERICAN WOOD COUNCIL

Table 2.1 Lateral Framing Connection Loads from Wind

(For Roof-to-Plate, Plate-to-Plate, Plate-to-Stud, and Plate-to-Floor)

Wind Speed 3-second gust (mph) (See Figure 1.1)	90	95	100	105	110	115	120	130	140	150	160	170	180	195
Wall Height (ft)	**Unit Framing Loads (plf)[1,2,3,4,5]**													
8	45	50	55	61	67	73	79	93	108	124	141	159	178	209
10	53	59	66	72	79	87	94	111	129	148	168	190	212	249
12	61	68	76	83	91	100	109	128	148	170	193	218	245	287
14	69	77	85	94	103	112	122	144	167	191	218	246	275	323
16	76	85	94	104	114	124	135	159	184	212	241	272	305	358
18	83	93	103	113	124	136	148	174	201	231	263	297	333	391
20	90	100	111	123	135	147	160	188	218	250	285	321	360	423

1 Tabulated framing loads shall be permitted to be multiplied by 0.92 for framing not located within 3 feet of corners for buildings less than 30 feet in width (W), or within W/10 of corners for buildings greater than 30 feet in width.

2 Tabulated framing loads are based on C&C wind loads and assume a building located in Exposure B with a mean roof height of 33 feet. For buildings located in Exposures B with mean roof heights less than 33 feet, or in Exposures C or D, tabulated values shall be adjusted in accordance with Section 2.1.3.1.

3 Tabulated framing loads are specified in pounds per linear foot of wall. To determine connection requirements (lbs), multiply the tabulated unit lateral framing load by the multiplier from the table below corresponding to the spacing of the connection:

Connection Spacing (in.)	12	16	19.2	24	48
Multiplier	1.00	1.33	1.60	2.00	4.00

4 When calculating lateral loads for ends of headers, girders, and window sills, multiply the tabulated unit lateral load by ½ of the header, girder, or sill span (ft).

5 The adjusted unit lateral framing load shall not be less than 9.6psf x 1/2 the wall height.

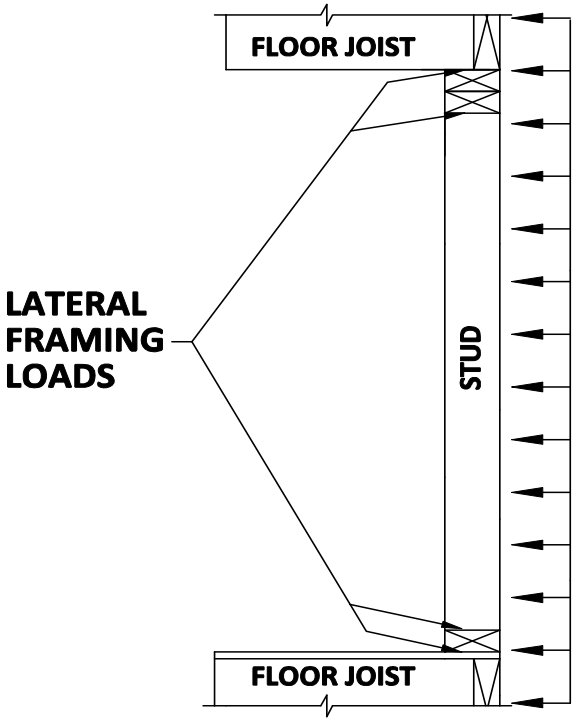

Copyright © American Wood Council. Downloaded/printed pursuant to License Agreement. No reproduction or transfer authorized.

Table 2.2A Uplift Connection Loads from Wind

(For Roof-to-Wall, Wall-to-Wall, and Wall-to-Foundation)

Wind Speed 3-second gust (mph) (See Figure 1.1)		90	95	100	105	110	115	120	130	140	150	160	170	180	195
Roof/Ceiling Assembly Design Dead Load	**Roof Span (ft)**	**Unit Connection Loads (plf)[1,2,3,4,5,6,7]**													
0 psf [8]	**12**	79	88	97	107	118	128	140	164	190	219	249	281	315	369
	24	130	145	161	177	195	213	232	272	315	362	412	465	521	612
	36	182	203	225	248	272	298	324	380	441	506	576	650	729	856
	48	234	261	289	319	350	383	417	489	567	651	741	836	938	1100
	60	287	319	354	390	428	468	509	598	693	796	906	1022	1146	1345
10 psf	**12**	31	40	49	59	70	80	92	116	142	171	201	233	267	321
	24	46	61	77	93	111	129	148	188	231	278	328	381	437	528
	36	62	83	105	128	152	178	204	260	321	386	456	530	609	736
	48	78	105	133	163	194	227	261	333	411	495	585	680	782	944
	60	95	127	162	198	236	276	317	406	501	604	714	830	954	1153
15 psf	**12**	7	16	25	35	46	56	68	92	118	147	177	209	243	297
	24	4	19	35	51	69	87	106	146	189	236	286	339	395	486
	36	2	23	45	68	92	118	144	200	261	326	396	470	549	676
	48	-	27	55	85	116	149	183	255	333	417	507	602	704	866
	60	-	31	66	102	140	180	221	310	405	508	618	734	858	1057
20 psf	**12**	-	-	1	11	22	32	44	68	94	123	153	185	219	273
	24	-	-	-	9	27	45	64	104	147	194	244	297	353	444
	36	-	-	-	8	32	58	84	140	201	266	336	410	489	616
	48	-	-	-	7	38	71	105	177	255	339	429	524	626	788
	60	-	-	-	6	44	84	125	214	309	412	522	638	762	961
25 psf	**12**	-	-	-	-	-	8	20	44	70	99	129	161	195	249
	24	-	-	-	-	-	3	22	62	105	152	202	255	311	402
	36	-	-	-	-	-	-	24	80	141	206	276	350	429	556
	48	-	-	-	-	-	-	27	99	177	261	351	446	548	710
	60	-	-	-	-	-	-	29	118	213	316	426	542	666	865

1 Tabulated unit uplift connection loads shall be permitted to be multiplied by 0.75 for framing not located within 6 feet of corners for buildings less than 30 feet in width (W), or W/5 for buildings greater than 30 feet in width.

2 Tabulated uplift loads are based on MWFRS wind loads and assume a building located in Exposure B with a mean roof height of 33 feet. For buildings located in Exposures B with mean roof heights less than 33 feet, or in Exposures C or D, tabulated values for 0 psf roof dead load shall be adjusted in accordance with Section 2.1.3.1 then reduced by the appropriate design dead load.

3 Tabulated uplift loads are specified in pounds per linear foot of wall. To determine connection requirements (lbs), multiply the tabulated unit uplift load by the multiplier from the table below corresponding to the spacing of the connectors:

Connection Spacing (in.)	12	16	19.2	24	48
Multiplier	1.00	1.33	1.60	2.00	4.00

4 Tabulated uplift loads equal total uplift minus 0.6 of the roof/ceiling assembly design dead load.

5 Tabulated uplift loads are specified for roof-to-wall connections. When calculating uplift loads for wall-to-wall or wall-to-foundation connections, tabulated uplift values shall be permitted to be reduced by 73 plf (0.60 x 121 plf) for each full wall above.

6 When calculating uplift loads for ends of headers/girders, multiply the tabulated unit uplift load by 1/2 of the header/girder span (ft.). Cripple studs need only be attached per typical uplift requirements.

7 For jack rafter uplift connections, use a roof span equal to twice the jack rafter length. The jack rafter length includes the overhang length and the jack span.

8 Tabulated uplift loads for 0 psf design dead load are included for interpolation or use with actual roof dead loads.

Copyright © American Wood Council. Downloaded/printed pursuant to License Agreement. No reproduction or transfer authorized.

Table 2.2B Ridge Connection Loads from Wind

(Dead Load Assumptions: Roof Assembly DL = 10 psf)

Wind Speed 3-second gust (mph) (See Figure 1.1)		90	95	100	105	110	115	120	130	140	150	160	170	180	195
Roof Pitch	**Roof Span (ft)**	**Unit Connection Loads (plf)[1,2,3,4,5]**													
3:12	**12**	28	39	51	64	77	91	105	136	170	205	243	284	327	397
	24	56	78	102	128	154	182	211	273	339	411	487	568	655	793
	36	83	118	154	192	231	273	316	409	509	616	730	852	982	1190
	48	111	157	205	255	308	364	422	545	678	821	974	1137	1309	1586
	60	139	196	256	319	386	455	527	681	848	1026	1217	1421	1636	1983
4:12	**12**	26	35	45	55	66	77	88	113	140	168	199	232	266	322
	24	52	70	90	110	131	153	177	226	280	337	398	463	533	644
	36	78	106	135	165	197	230	265	339	419	505	597	695	799	966
	48	104	141	179	220	262	307	353	452	559	674	796	927	1065	1288
	60	130	176	224	275	328	384	442	565	699	842	995	1159	1332	1610
5:12	**12**	20	27	35	43	51	60	69	88	109	132	156	182	209	253
	24	40	54	69	85	102	119	138	177	219	264	312	364	418	506
	36	60	81	104	128	153	179	207	265	328	396	468	545	627	758
	48	79	108	139	170	204	239	276	353	437	528	624	727	836	1011
	60	99	135	173	213	255	299	344	442	547	660	780	909	1045	1264
6:12	**12**	20	26	33	40	48	55	63	81	99	119	141	164	188	227
	24	40	53	66	80	95	111	127	162	199	239	282	327	376	453
	36	60	79	99	121	143	166	190	242	298	358	423	491	564	680
	48	80	105	132	161	190	221	254	323	398	478	564	655	751	907
	60	100	132	165	201	238	277	317	404	497	597	704	818	939	1134
7:12-12:12	**12**	27	32	37	43	49	55	62	76	94	112	132	153	175	211
	24	54	64	75	86	98	110	123	153	187	224	263	305	350	421
	36	80	96	112	129	147	165	185	229	281	336	395	458	525	632
	48	107	128	149	172	196	220	246	306	374	448	527	611	700	842
	60	134	159	186	215	244	275	308	382	468	560	659	763	874	1053

1 Tabulated ridge connection loads shall be permitted to be multiplied by 0.70 for framing not located within 6 feet of corners for buildings less than 30 feet in width (W), or W/5 for buildings greater than 30 feet in width.

2 Tabulated ridge connection loads are based on MWFRS wind loads and assume a building located in Exposure B with a mean roof height of 33 feet. For buildings located in Exposures B with mean roof heights less than 33 feet, or in Exposures C or D, tabulated values shall be adjusted in accordance with Section 2.1.3.1.

3 Tabulated ridge connection loads are specified in pounds per linear foot of ridge. To determine connection requirements (lbs), multiply the tabulated ridge connection load by the multiplier from the table below corresponding to the spacing of the connectors:

Ridge Connection Spacing (in.)	12	16	19.2	24	48
Multiplier	1.00	1.33	1.60	2.00	4.00

4 Tabulated ridge connection loads assume 0.6 of the roof assembly design dead load (0.6 x 10 psf).

5 For buildings with roof slopes of less than 3:12, the roof framing members shall be attached to the ridge beam with connectors in accordance with Table 2.2A.

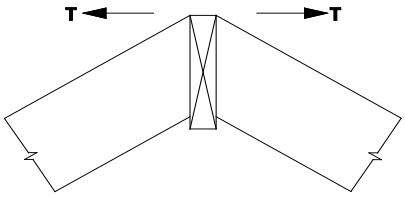

Copyright © American Wood Council. Downloaded/printed pursuant to License Agreement. No reproduction or transfer authorized.

Table 2.2C Rake Overhang Outlooker Uplift Connection Loads

Wind Speed 3-second gust (mph) (See Figure 1.1)	90	95	100	105	110	115	120	130	140	150	160	170	180	195
Uplift Connector Load (plf)[1,2,3,4,5,6]	159	178	194	217	238	260	283	333	386	443	503	570	637	748

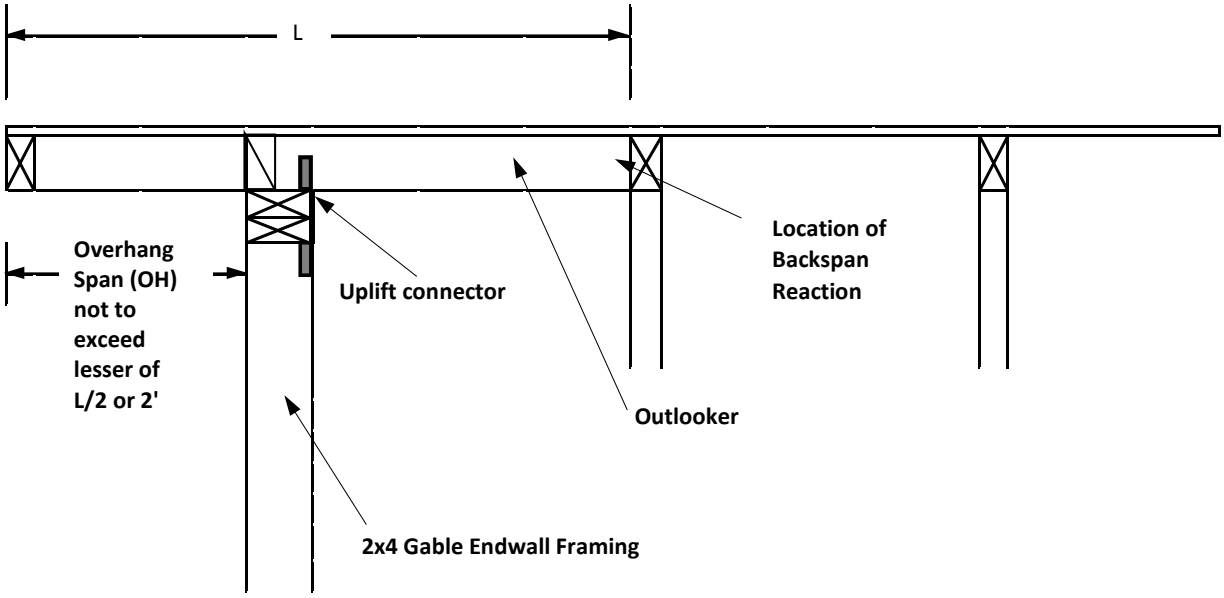

1 Tabulated outlooker uplift connection loads are based on C&C wind loads and assume a building located in Exposure B with a mean roof height of 33 feet. For buildings located in Exposures B with mean roof heights less than 33 feet, or in Exposures C or D, tabulated values shall be adjusted in accordance with Section 2.1.3.1.

2 Tabulated outlooker uplift connection loads are based on 2-foot overhangs, 2x4 gable endwall framing, and uplift connector location on inside face of 2x4 gable endwall framing. For overhangs less than 2 feet, tabulated uplift connector load values are permitted to be multiplied by $[(2' + OH)/4']^2$ (OH measured in feet).

3 For overhangs located in Zone 2 per the figures of Table 2.4, tabulated uplift connector loads are permitted to be multiplied by 0.74.

4 Tabulated outlooker uplift connection loads are calculated using C&C pressure coefficients assuming a roof pitch range greater than 1.5:12 and less than or equal to 6:12. For roof pitches greater than 6:12, tabulated values are permitted to be multiplied by 0.85.

5 The reaction of the outlooker backspan at the first interior truss is permitted to be calculated as 20% of the tabulated uplift connector load.

6 Tabulated uplift connector loads are specified in pounds per lineal foot along the gable endwall. To determine connection requirements (lbs), multiply the tabulated uplift connector load by the multiplier from the table below corresponding to the spacing of the uplift connectors:

Uplift Connector Spacing (in.)	12	16	24	48
Multiplier	1.00	1.33	2.00	4.00

Copyright © American Wood Council. Downloaded/printed pursuant to License Agreement. No reproduction or transfer authorized.

Table 2.3 Thrust Connection Loads

(For Rafter to Ceiling Joist Heel Joint)
Dead Load Assumptions: Roof Assembly DL = 10 psf

Ground Snow Load or Roof Live Load	20 psf RLL				30 psf GSL				50 psf GSL				70 psf GSL			
	Roof Span (ft)															
Roof Pitch	12	20	28	36	12	20	28	36	12	20	28	36	12	20	28	36
	Thrust Connection Load (plf)[1,2,3,4,5]															
3:12	360	600	840	1080	397	662	927	1192	582	970	1358	1746	767	1278	1789	2300
4:12	270	450	630	810	298	497	695	894	437	728	1019	1310	575	959	1342	1725
5:12	216	360	504	648	238	397	556	715	349	582	815	1048	460	767	1074	1380
6:12	180	300	420	540	199	331	463	596	291	485	679	873	383	639	895	1150
7:12	154	257	360	463	170	284	397	511	249	416	582	748	329	548	767	986
8:12	135	225	315	405	149	248	348	447	218	364	509	655	288	479	671	863
9:12	120	200	280	360	132	221	309	397	194	323	453	582	256	426	596	767
10:12	108	180	252	324	119	199	278	357	175	291	407	524	230	383	537	690
11:12	98	164	229	295	108	181	253	325	159	265	370	476	209	349	488	627
12:12	90	150	210	270	99	166	232	298	146	243	340	437	192	320	447	575

1 Heel joint thrust connections are not required when the ridge is supported by a loadbearing wall, header, or ridge beam designed to resist the applied loads.

2 When intermediate support of the rafter is provided by vertical struts or purlins to a loadbearing wall, the tabulated heel joint connection requirements shall be permitted to be reduced proportionally to the reduction in span.

3 Tabulated thrust connection loads are specified in pounds per linear foot of top plate. To determine connection requirements (lbs), multiply the tabulated thrust connection load by the multiplier from the table below corresponding to the spacing of the connectors:

Thrust Connection Spacing (in.)	12	16	19.2	24	48
Multiplier	1.00	1.33	1.60	2.00	4.00

4 Ceiling joist lap splices shall be capable of resisting the tabulated thrust connection loads.

5 Tabulated thrust connection loads assume ceiling joists or rafter ties are located at the bottom of the attic space. Tabulated thrust connection loads do not include the additional weight of the ceiling assembly. When ceiling joists or rafter ties are located higher in the attic space, no attic storage is assumed, and the tabulated thrust connection loads shall be calculated by the following equation:

$$T_{req} = T_{tabulated} / [1 - (H_C / H_R)]$$

where:

T_{req} = Actual thrust connection load
$T_{tabulated}$ = Tabulated thrust connection load
H_C = Ceiling height in attic space (Measured from top plate)
H_R = Top plate-to-roof ridge height

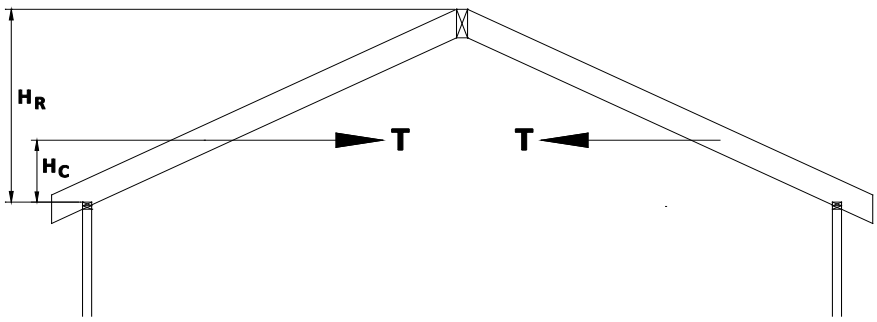

Note: Lateral deflection of the rafter below the rafter ties may exceed 3/4 inch when rafter ties are located above one-third of the top plate-to-roof ridge height, H_R, or when H_c is greater than 2 feet and may require additional consideration.

Copyright © American Wood Council. Downloaded/printed pursuant to License Agreement. No reproduction or transfer authorized.

Table 2.4 Roof and Wall Sheathing Suction Loads

(For Sheathing and Sheathing Attachment)

GABLE ROOF

700-yr. Wind Speed 3-second gust (mph)	90	95	100	105	110	115	120	130	140	150	160	170	180	195
Sheathing Location[1]	Suction Pressure (psf)[2, 3]													
Zone 1	16.6	18.5	20.5	22.6	24.8	27.1	29.5	34.6	40.2	46.1	52.5	59.2	66.4	77.9
Zone 2	24.2	27.0	29.9	33.0	36.2	39.5	43.0	50.5	58.6	67.3	76.5	86.4	96.9	113.7
Zone 2 (overhang)	26.6	29.7	32.9	36.3	39.8	43.5	47.4	55.6	64.5	74.0	84.2	95.1	106.6	125.1
Zone 3	28.8	32.1	35.5	39.2	43.0	47.0	51.2	60.1	69.6	79.9	91.0	102.7	115.1	135.1
Zone 3 (overhang)	35.8	39.9	44.2	48.7	53.5	58.4	63.6	74.7	86.6	99.4	113.1	127.7	143.1	168.0
Zone 4	9.7	10.9	12.0	13.3	14.6	15.9	17.3	20.3	23.6	27.1	30.8	34.8	39.0	45.8
Zone 5	12.0	13.4	14.9	16.4	18.0	19.6	21.4	25.1	29.1	33.4	38.0	42.9	48.1	56.5

HIP ROOF

Wind Speed 3-second gust (mph)	90	95	100	105	110	115	120	130	140	150	160	170	180	195
Sheathing Location[1]	Suction Pressure (psf)[2, 3]													
Zone 1	15.1	16.8	18.6	20.5	22.5	24.6	26.8	31.5	36.5	41.9	47.6	53.8	60.3	70.8
Zone 2	22.7	25.3	28.0	30.9	33.9	37.0	40.3	47.3	54.9	63.0	71.7	81.0	90.8	106.5
Zone 2 (overhang)	27.4	30.5	33.8	37.3	40.9	44.8	48.7	57.2	66.3	76.1	86.6	97.8	109.6	128.7
Zone 3	28.8	32.1	35.5	39.2	43.0	47.0	51.2	60.1	69.6	79.9	91.0	103	115	135
Zone 3 (overhang)	33.5	37.3	41.4	45.6	50.0	54.7	59.6	69.9	81.1	93.1	106	120	134	157
Zone 4	9.7	10.9	12.0	13.3	14.6	15.9	17.3	20.3	23.6	27.1	30.8	34.8	39.0	45.8
Zone 5	12.0	13.4	14.9	16.4	18.0	19.6	21.4	25.1	29.1	33.4	38.0	42.9	48.1	56.5

1 The dimension, a, is measured as 10% of the minimum building dimension, but not less than 3 feet.

2 Tabulated sheathing suction loads are based on C&C wind loads and assume a building located in Exposure B with a mean roof height of 33 feet. For buildings located in Exposures B with mean roof heights less than 33 feet, or in Exposures C or D, tabulated values shall be adjusted in accordance with Section 2.1.3.1.

3 The adjusted suction pressure shall not be less than 9.6 psf.

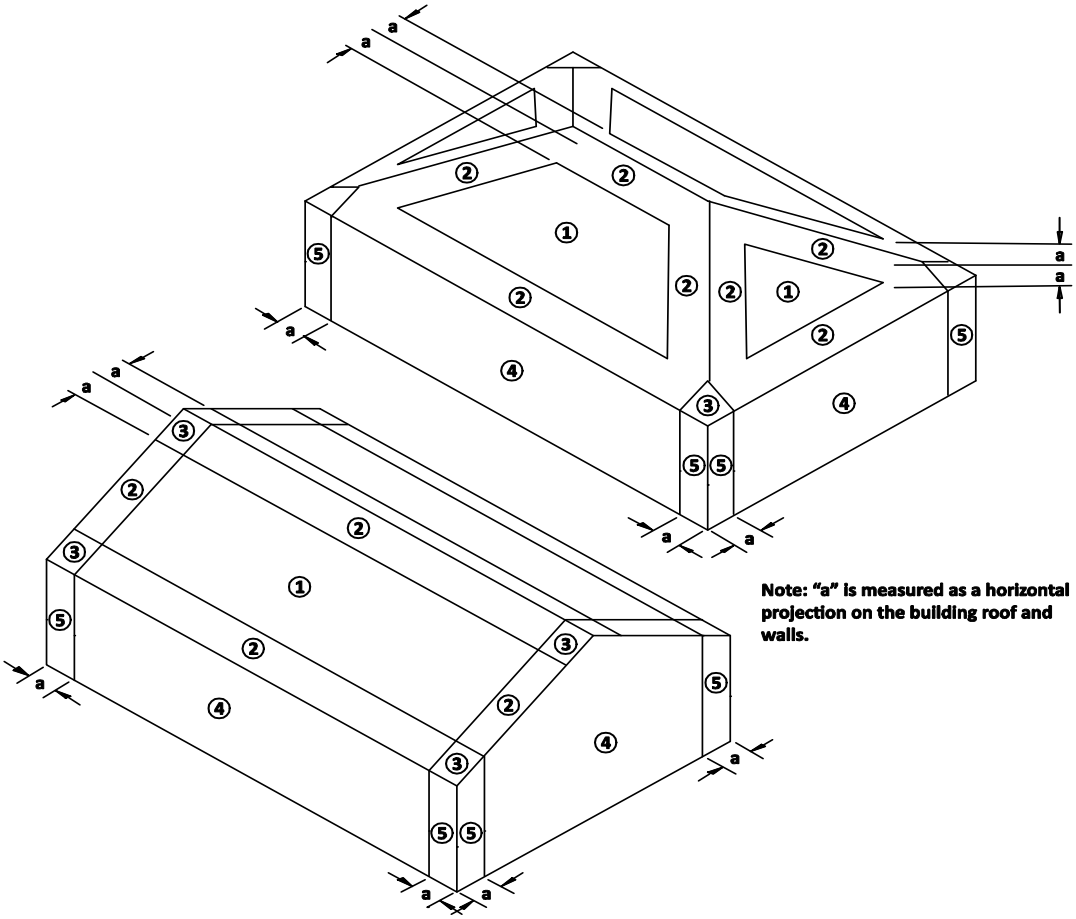

Note: "a" is measured as a horizontal projection on the building roof and walls.

Copyright © American Wood Council. Downloaded/printed pursuant to License Agreement. No reproduction or transfer authorized.

Table 2.5A Lateral Diaphragm Loads from Wind - Perpendicular to Ridge

(For Calculating In-Plane Shear in Roof and Floor Diaphragm)

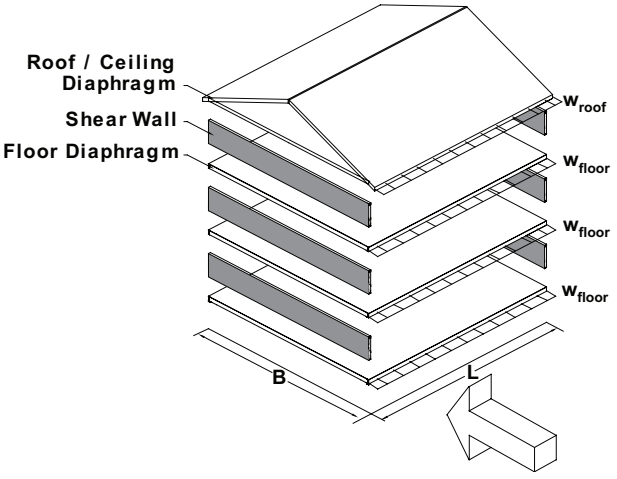

Wind Speed 3-second gust (mph) (See Figure 1.1)		90	95	100	105	110	115	120	130	140	150	160	170	180	195
Roof Pitch	**Roof Span (ft)**	**Unit Lateral Loads for Roof Diaphragm, w_{roof_L}, (plf)[1,3,4,5]**													
1.5:12 - 3:12	**24**	65	65	65	65	65	65	65	76	88	101	115	130	146	172
	36	73	73	73	73	73	73	73	76	88	101	115	130	146	172
	48	80	80	80	80	80	80	80	80	88	101	115	130	146	172
	60	88	88	88	88	88	88	88	88	88	101	115	130	146	172
4:12	**24**	70	70	70	70	70	70	71	83	97	111	126	142	160	187
	36	80	80	80	80	80	80	80	83	97	111	126	142	160	187
	48	90	90	90	90	90	90	90	90	97	111	126	142	160	187
	60	100	100	100	100	100	100	100	100	100	111	126	142	160	187
5:12	**24**	75	75	75	75	75	75	75	84	97	112	127	143	161	189
	36	88	88	88	88	88	88	88	88	95	110	125	141	158	185
	48	100	100	100	100	100	100	100	100	100	110	125	141	158	185
	60	113	113	113	113	113	113	113	113	113	113	125	141	158	185
6:12	**24**	80	80	80	80	83	90	98	115	134	154	175	197	221	260
	36	95	95	95	95	95	102	112	131	152	174	198	224	251	295
	48	110	110	110	110	110	116	126	148	172	197	224	253	284	333
	60	125	125	125	125	125	129	141	165	191	220	250	282	316	371
7:12	**24**	85	85	91	101	110	121	131	154	179	205	234	264	296	347
	36	103	103	112	124	136	149	162	190	220	253	287	325	364	427
	48	120	121	134	148	163	178	194	227	263	302	344	388	435	511
	60	138	141	157	173	189	207	225	265	307	352	401	452	507	595
8:12	**24**	90	90	98	108	118	129	141	165	191	220	250	282	316	371
	36	110	110	122	134	147	161	175	206	239	274	312	352	395	463
	48	130	133	147	162	178	194	212	248	288	331	376	425	476	559
	60	150	156	172	190	208	228	248	291	338	388	441	498	558	655
9:12	**24**	95	95	104	115	126	138	150	176	204	234	266	301	337	396
	36	118	118	131	145	159	174	189	222	257	295	336	379	425	499
	48	140	144	160	176	193	211	230	270	313	359	409	461	517	607
	60	163	170	188	207	228	249	271	318	369	423	482	544	609	715
10:12	**24**	100	100	110	122	134	146	159	187	216	249	283	319	358	420
	36	125	127	141	155	170	186	203	238	276	317	360	407	456	535
	48	150	156	172	190	208	228	248	291	338	388	441	498	558	655
	60	175	184	204	225	247	270	294	345	400	459	522	589	661	775
11:12	**24**	105	105	117	129	141	155	168	197	229	263	299	338	379	444
	36	133	136	150	166	182	199	216	254	294	338	385	434	487	571
	48	160	167	185	204	224	245	266	313	362	416	473	534	599	703
	60	188	198	220	242	266	291	316	371	431	494	562	635	712	835
12:12	**24**	110	111	123	136	149	163	177	208	242	277	315	356	399	469
	36	140	144	160	176	193	211	230	270	313	359	409	461	517	607
	48	170	178	198	218	239	261	285	334	387	445	506	571	640	751
	60	200	213	235	260	285	311	339	398	462	530	603	681	763	895
		Unit Lateral Loads for Floor Diaphragm, w_{floor_L}, (plf)[1,2,3,5]													
		110	110	112	123	135	148	161	189	219	251	286	323	362	425

* See Footnotes 1 -5.

Copyright © American Wood Council. Downloaded/printed pursuant to License Agreement. No reproduction or transfer authorized.

Table 2.5B Lateral Diaphragm Loads from Wind - Parallel to Ridge

(For Calculating In-Plane Shear in Roof and Floor Diaphragm)

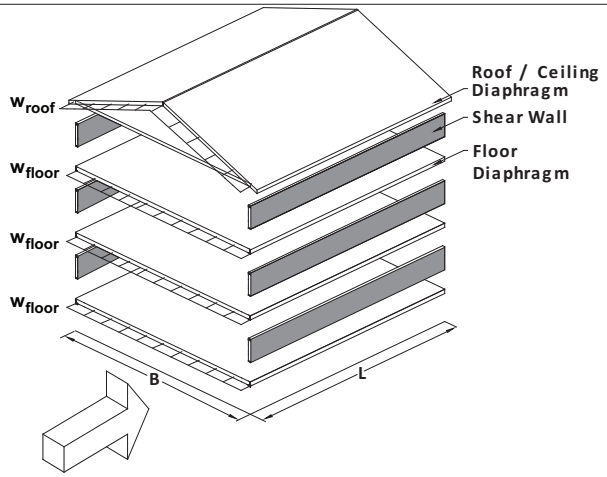

Wind Speed 3-second gust (mph) (See Figure 1.1)		90	95	100	105	110	115	120	130	140	150	160	170	180	195
Roof Pitch	**Roof Span (ft)**	**Unit Lateral Loads for Roof Diaphragm, w_{roofll}, (plf)[1,3,4,5]**													
1.5:12 - 3:12	**24**	65	65	65	65	65	65	65	76	88	101	115	130	145	170
	36	73	73	73	73	73	73	73	84	97	111	126	143	160	188
	48	80	80	80	80	80	80	80	92	107	123	140	158	177	207
	60	88	88	88	88	88	88	88	101	117	134	153	172	193	227
4:12	**24**	70	70	70	70	70	70	70	82	95	109	124	140	156	184
	36	80	80	80	80	80	80	80	92	107	123	140	158	177	207
	48	90	90	90	90	90	90	90	104	120	138	157	177	199	233
	60	100	100	100	100	100	100	100	115	134	153	174	197	221	259
5:12	**24**	75	75	75	75	75	75	75	87	101	116	132	150	168	197
	36	88	88	88	88	88	88	88	101	117	134	153	172	193	227
	48	100	100	100	100	100	100	100	115	134	153	174	197	221	259
	60	113	113	113	113	113	113	113	130	150	173	196	222	248	292
6:12	**24**	80	80	80	80	80	80	80	93	108	124	141	159	179	210
	36	95	95	95	95	95	95	95	109	127	146	166	187	210	246
	48	110	110	110	110	110	110	110	127	147	169	192	217	243	285
	60	125	125	125	125	125	125	125	144	167	192	218	246	276	324
7:12	**24**	85	85	85	85	85	85	85	99	115	132	150	169	190	223
	36	103	103	103	103	103	103	103	118	137	157	179	202	226	266
	48	120	120	120	120	120	120	120	138	160	184	209	236	265	311
	60	138	138	138	138	138	138	138	158	184	211	240	271	304	356
8:12	**24**	90	90	90	90	90	90	90	105	122	140	159	179	201	236
	36	110	110	110	110	110	110	110	127	147	169	192	217	243	285
	48	130	130	130	130	130	130	130	150	174	199	227	256	287	337
	60	150	150	150	150	150	150	150	173	200	230	262	295	331	389
9:12	**24**	95	95	95	95	95	95	95	111	128	147	168	189	212	249
	36	118	118	118	118	118	118	118	135	157	180	205	231	259	305
	48	140	140	140	140	140	140	140	161	187	215	244	276	309	363
	60	163	163	163	163	163	163	163	187	217	249	284	320	359	421
10:12	**24**	100	100	100	100	100	100	100	117	135	155	177	199	223	262
	36	125	125	125	125	125	125	125	144	167	192	218	246	276	324
	48	150	150	150	150	150	150	150	173	200	230	262	295	331	389
	60	175	175	175	175	175	175	175	202	234	268	305	345	386	454
11:12	**24**	105	105	105	105	105	105	105	122	142	163	185	209	235	275
	36	133	133	133	133	133	133	133	153	177	203	231	261	293	343
	48	160	160	160	160	160	160	160	184	214	245	279	315	353	415
	60	188	188	188	188	188	188	188	216	250	288	327	369	414	486
12:12	**24**	110	110	110	110	110	110	110	128	149	171	194	219	246	289
	36	140	140	140	140	140	140	140	161	187	215	244	276	309	363
	48	170	170	170	170	170	170	170	196	227	261	297	335	375	441
	60	200	200	200	200	200	200	200	230	267	307	349	394	442	518
		Unit Lateral Loads for Floor Diaphragm, $w_{floorll}$, (plf)[1,2,3,5]													
		110	110	110	110	110	110	110	128	149	171	194	219	246	289

* See Footnotes 1 -5.

Copyright © American Wood Council. Downloaded/printed pursuant to License Agreement. No reproduction or transfer authorized.

Footnotes to Tables 2.5A and 2.5B

1 The total shear load equals the tabulated unit lateral load multiplied by the building length perpendicular to the wind direction.
2 Tabulated unit lateral loads are based on 10 foot wall heights and a 1 foot floor depth. For other wall heights, H, tabulated values for floor diaphragms shall be permitted to be used when multiplied by (H+1)/11.
3 Tabulated unit lateral loads are based on MWFRS wind loads and assume a building located in Exposure B with a mean roof height of 33 feet. For buildings located in Exposures B with mean roof heights less than 33 feet, or in Exposures C and D, tabulated values shall be adjusted in accordance with Section 2.1.3.1.
4 Hip roof systems shall be designed using Table 2.5A for both orthogonal directions.
5 Shear capacity requirements for roof diaphragms, shear walls, and floor diaphragms shall be calculated as follows:

Calculating Total Shear Capacity Requirements V_{roof}, V_{floor} (lbs)		**Calculating Diaphragm Unit Shear Capacity Requirements v_{roof}, v_{floor} (plf)**		**Calculating Total Shear Wall Shear Capacity Requirements V_{wall} (plf)**	
Wind Perpendicular to Ridge ("w" from Table 2.5A)	**Wind Parallel to Ridge ("w" from Table 2.5B)**	**Wind Perpendicular to Ridge**	**Wind Parallel to Ridge**	**Wind Perpendicular to Ridge**	**Wind Parallel to Ridge**
$V_{roof\perp} = w_{roof\perp}(L)$ $V_{floor(i)\perp} = w_{floor(i)\perp}(L)$	$V_{roof\parallel} = w_{roof\parallel}(B)$ $V_{floor(i)\parallel} = w_{floor(i)\parallel}(B)$	$v_{roof\perp} = \frac{V_{roof\perp}}{2(B)}$ $v_{floor(i)\perp} = \frac{V_{floor(i)\perp}}{2(B)}$	$v_{roof\parallel} = \frac{V_{roof\parallel}}{2(L)}$ $v_{floor(i)\parallel} = \frac{V_{floor(i)\parallel}}{2(L)}$	**Shear Wall Bracing Roof & Ceiling**	
				$V_{wall\perp} = V_{roof\perp}$	$V_{wall\parallel} = V_{roof\parallel}$
				Shear Wall Bracing Roof/Ceiling & 1 Floor	
				$V_{wall\perp} = V_{roof\perp} + V_{floor(1)\perp}$	$V_{wall\parallel} = V_{roof\parallel} + V_{floor(1)\parallel}$
				Shear Wall Bracing Roof/Ceiling & 2 Floors	
				$V_{wall\perp} = V_{roof\perp} + V_{floor(1)\perp} + V_{floor(2)\perp}$	$V_{wall\parallel} = V_{roof\parallel} + V_{floor(1)\parallel} + V_{floor(2)\parallel}$

Copyright © American Wood Council. Downloaded/printed pursuant to License Agreement. No reproduction or transfer authorized.

Table 2.5C Lateral Diaphragm Loads from Wind - Parallel to Ridge

(For Attic Floor or Ceiling Diaphragm When Bracing Gable Endwall)

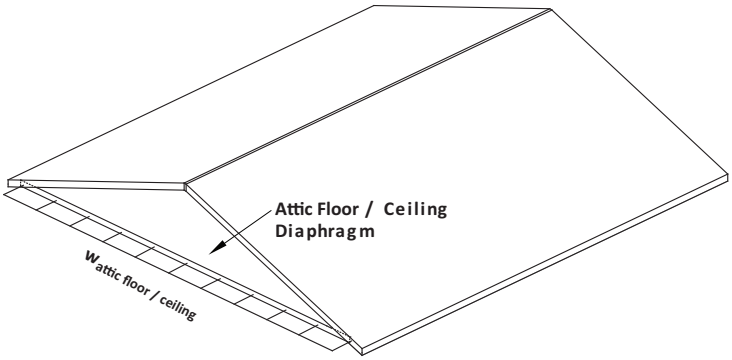

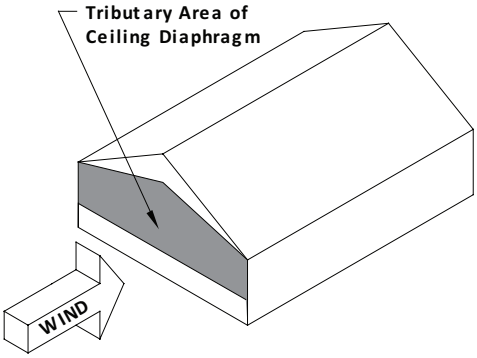

Wind Speed 3-second gust (mph) (See Figure 1.1)		90	95	100	105	110	115	120	130	140	150	160	170	180	195
Roof Pitch	**Roof Span (ft)**	**Unit Lateral Loads for Attic Floor/Ceiling Diaphragm, $w_{attic\ floor/ceiling}$(plf)[1,2,3,4,5,6,7,8]**													
1.5:12 - 3:12	**24**	58	58	58	58	58	58	58	67	78	89	102	115	129	151
	36	61	61	61	61	61	61	61	71	82	94	107	121	135	159
	48	65	65	65	65	65	65	65	75	87	100	113	128	144	168
	60	69	69	69	69	69	69	69	79	92	105	120	135	152	178
4:12	**24**	60	60	60	60	60	60	60	70	81	93	106	120	134	157
	36	65	65	65	65	65	65	65	75	87	100	113	128	144	168
	48	70	70	70	70	70	70	70	81	94	107	122	138	155	181
	60	75	75	75	75	75	75	75	86	100	115	131	148	166	194
5:12	**24**	63	63	63	63	63	63	63	73	84	97	110	125	140	164
	36	69	69	69	69	69	69	69	79	92	105	120	135	152	178
	48	75	75	75	75	75	75	75	86	100	115	131	148	166	194
	60	81	81	81	81	81	81	81	94	109	125	142	160	179	211
6:12	**24**	65	65	65	65	65	65	65	76	88	101	115	130	145	170
	36	73	73	73	73	73	73	73	84	97	111	126	143	160	188
	48	80	80	80	80	80	80	80	92	107	123	140	158	177	207
	60	88	88	88	88	88	88	88	101	117	134	153	172	193	227
7:12	**24**	68	68	68	68	68	68	68	79	91	105	119	135	151	177
	36	76	76	76	76	76	76	76	88	102	117	133	150	168	198
	48	85	85	85	85	85	85	85	98	114	130	148	167	188	220
	60	94	94	94	94	94	94	94	108	125	144	164	185	207	243
8:12	**24**	70	70	70	70	70	70	70	82	95	109	124	140	156	184
	36	80	80	80	80	80	80	80	92	107	123	140	158	177	207
	48	90	90	90	90	90	90	90	104	120	138	157	177	199	233
	60	100	100	100	100	100	100	100	115	134	153	174	197	221	259
9:12	**24**	73	73	73	73	73	73	73	85	98	113	128	145	162	190
	36	84	84	84	84	84	84	84	96	112	128	146	165	185	217
	48	95	95	95	95	95	95	95	109	127	146	166	187	210	246
	60	106	106	106	106	106	106	106	122	142	163	185	209	235	275
10:12	**24**	75	75	75	75	75	75	75	87	101	116	132	150	168	197
	36	88	88	88	88	88	88	88	101	117	134	153	172	193	227
	48	100	100	100	100	100	100	100	115	134	153	174	197	221	259
	60	113	113	113	113	113	113	113	130	150	173	196	222	248	292
11:12	**24**	78	78	78	78	78	78	78	90	105	120	137	154	173	203
	36	91	91	91	91	91	91	91	105	122	140	159	180	201	236
	48	105	105	105	105	105	105	105	121	140	161	183	207	232	272
	60	119	119	119	119	119	119	119	137	159	182	207	234	262	308
12:12	**24**	80	80	80	80	80	80	80	93	108	124	141	159	179	210
	36	95	95	95	95	95	95	95	109	127	146	166	187	210	246
	48	110	110	110	110	110	110	110	127	147	169	192	217	243	285
	60	125	125	125	125	125	125	125	144	167	192	218	246	276	324

* See Footnotes 1 -8.

See footnotes 1 - 8.

Copyright © American Wood Council. Downloaded/printed pursuant to License Agreement. No reproduction or transfer authorized.

Footnotes to Table 2.5C

1 The total shear load equals the tabulated unit lateral load multiplied by the endwall length.

2 Tabulated unit lateral loads are based on 10 foot wall heights.

3 Tabulated unit lateral loads assume the attic floor/ceiling diaphragm is continuous between endwalls. When the diaphragm only resists loads from one endwall, the tabulated unit lateral load shall be multiplied by 0.84.

4 Tabulated unit lateral loads are based on MWFRS wind loads and assume a building located in Exposure B with a mean roof height of 33 feet. For buildings located in Exposures B with mean roof heights less than 33 feet, or in Exposures C and D, tabulated values shall be adjusted in accordance with Section 2.1.3.1.

5 Attic floor or ceiling diaphragms shall not be used to brace gable endwalls used with cathedral ceilings.

6 Attic floor or ceiling diaphragms are not required for hip roof systems.

7 When a ceiling diaphragm is used to brace the gable endwalls, the unit lateral loads on the roof diaphragm, when the wind is parallel to the ridge, need not exceed the tabulated roof lateral load (from Table 2.5B) minus the ceiling lateral load (from Table 2.5C).

8 Shear capacity requirements for attic floor or ceiling diaphragms shall be calculated as follows:

Calculating Total Shear Capacity Requirements V_{roof}, $V_{attic\ floor/ceiling}$ **(lbs)**	**Calculating Diaphragm Unit Shear Capacity Requirements** v_{roof}, $v_{attic\ floor/ceiling}$ **(plf)**
$V_{attic\ floor/ceiling} = w_{attic\ floor/ceiling}(B)$ $V_{roof} = V_{roof\|(from Table\ 2.5B)} - V_{attic\ floor/ceiling}$	$v_{attic\ floor/ceiling} = \dfrac{V_{attic\ floor/ceiling}}{2(L)}$ $v_{roof} = \dfrac{V_{roof}}{2(L)}$

Copyright © American Wood Council. Downloaded/printed pursuant to License Agreement. No reproduction or transfer authorized.

Table 2.6 Lateral Loads from Seismic

(For Calculating In-Plane Shear at Roof and Floor Diaphragm Levels)

	Diaphragm level	Effective seismic weight at each level (lbs)[1,2]	Shear at each level (lbs)
One-Story Building Above Grade Plane	Roof/Ceiling (RD)	$W_{RD} = W_{roof} + W_{(wall\ W)}/2 + W_{(wall\ L)}/2 + W_{partition}/2 + W_{gable}$	$V_{RD}=1.0\ W_{RD}\ S_{DS}/R$
	1st Floor (FD1)	$W_{FD1} = W_{floor\ 1} + W_{(wall\ W)} + W_{(wall\ L)} + W_{partition}$	$V_{FD1}=1.0\ W_{FD1}\ S_{DS}/R$
Two-Story Building Above Grade Plane	Roof/Ceiling (RD)	$W_{RD} = W_{roof} + W_{(wall\ W)}/2 + W_{(wall\ L)}/2 + W_{partition}/2 + W_{gable}$	$V_{RD}=1.1\ W_{RD}\ S_{DS}/R$
	2nd Floor (FD2)	$W_{FD2} = W_{floor\ 2} + W_{(wall\ W)} + W_{(wall\ L)} + W_{partition}$	$V_{FD2}=1.1\ W_{FD2}\ S_{DS}/R$
	1st Floor (FD1)	$W_{FD1} = W_{floor\ 1} + W_{(wall\ W)} + W_{(wall\ L)} + W_{partition}$	$V_{FD1}=1.1\ W_{FD1}\ S_{DS}/R$
Three-Story Building Above Grade Plane	Roof/Ceiling (RD)	$W_{RD} = W_{roof} + W_{(wall\ W)}/2 + W_{(wall\ L)}/2 + W_{partition}/2 + W_{gable}$	$V_{RD}=1.2\ W_{RD}\ S_{DS}/R$
	3rd Floor (FD3)	$W_{FD3} = W_{floor\ 3} + W_{(wall\ W)} + W_{(wall\ L)} + W_{partition}$	$V_{FD3}=1.2\ W_{FD3}\ S_{DS}/R$
	2nd Floor (FD2)	$W_{FD2} = W_{floor\ 2} + W_{(wall\ W)} + W_{(wall\ L)} + W_{partition}$	$V_{FD2}=1.2\ W_{FD2}\ S_{DS}/R$
	1st Floor (FD1)	$W_{FD1} = W_{floor\ 1} + W_{(wall\ W)} + W_{(wall\ L)} + W_{partition}$	$V_{FD1}=1.2\ W_{FD1}\ S_{DS}/R$

1. Lateral loads (lbs) from seismic are based on the assumption of a rectangular building with dimensions W and L. Effective seismic weight (lbs) and shear (lbs) at each level is based on the assumption that the weight corresponding to the mid-height of exterior perimeter walls and interior partition walls above and below diaphragm level "i" is tributary to diaphragm level "i".
2. W_{roof} includes 20% of ground snow load where the ground snow load exceeds 30 psf. For ground snow load of 50 psf and 70 psf, W_{roof} is increased by 10 psf and 14 psf, respectively.

	Diaphragm level	Calculating diaphragm unit shear capacity requirements (plf)[1]		Calculating total shear at each level (lbs) for shear capacity requirements for shear walls and connections[2]
		Load direction parallel to W	Load direction perpendicular to W	
One-Story Building Above Grade Plane	Roof/Ceiling (RD)	$v_{roof/ceiling} = V_{RD}/(2W)$	$v_{roof/ceiling} = V_{RD}/(2L)$	Shear wall beneath roof/ceiling: $V = V_{RD}$
	1st Floor (FD1)	$v_{floor} = V_{FD1}/(2W)$	$v_{floor} = V_{FD1}/(2L)$	Anchorage supporting roof/ceiling & 1 floor: $V = V_{RD} + V_{FD1}$
Two-Story Building Above Grade Plane	Roof/Ceiling (RD)	$v_{roof/ceiling} = V_{RD}/(2W)$	$v_{roof/ceiling} = V_{RD}/(2L)$	Shear wall beneath roof/ceiling: $V = V_{RD}$
	2nd Floor (FD2)	$v_{floor} = V_{FD2}/(2W)$	$v_{floor} = V_{FD2}/(2L)$	Shear wall beneath roof/ceiling & 1 floor: $V = V_{RD} + V_{FD2}$
	1st Floor (FD1)	$v_{floor} = V_{FD1}/(2W)$	$v_{floor} = V_{FD1}/(2L)$	Anchorage supporting roof/ceiling & 2 floors: $V = V_{RD} + V_{FD2} + V_{FD1}$
Three-Story Building Above Grade Plane	Roof/Ceiling (RD)	$v_{roof/ceiling} = V_{RD}/(2W)$	$v_{roof/ceiling} = V_{RD}/(2L)$	Shear wall beneath roof/ceiling: $V = V_{RD}$
	3rd Floor (FD3)	$v_{floor} = V_{FD3}/(2W)$	$v_{floor} = V_{FD3}/(2L)$	Shear wall beneath roof/ceiling & 1 floor: $V = V_{RD} + V_{FD3}$
	2nd Floor (FD2)	$v_{floor} = V_{FD2}/(2W)$	$v_{floor} = V_{FD2}/(2L)$	Shear wall beneath roof/ceiling & 2 floors: $V = V_{RD} + V_{FD3} + V_{FD2}$
	1st Floor (FD1)	$v_{floor} = V_{FD1}/(2W)$	$v_{floor} = V_{FD1}/(2L)$	Anchorage supporting roof/ceiling & 3 floors: $V = V_{RD} + V_{FD3} + V_{FD2} + V_{FD1}$

1. Diaphragm unit shear capacity (plf) requirements for seismic are calculated based on the assumption of a rectangular building with dimensions W and L. Seismic forces contributed by W_{wall} in line with the load direction are assumed to be resisted by shear walls and are not included in calculation of loads resisted by the diaphragm.
2. Shear capacity requirements (lbs) are applicable for shear walls and connections for seismic loads parallel and perpendicular to minimum building dimension, W. The diaphragm level, 1st Floor (FD1), is for the case where the floor diaphragm is supported directly on foundation walls, such as a crawl space or basement foundation. Total shear (lbs) at 1st Floor (FD1) represents the required anchorage force between the foundation sill plate and the foundation.

Copyright © American Wood Council. Downloaded/printed pursuant to License Agreement. No reproduction or transfer authorized.
AMERICAN WOOD COUNCIL

Table 2.7A Floor Joist Spans for 30 psf Live Load

(Habitable Attics and Sleeping Areas)

				2x6	2x8	2x10	2x12
	L/Δ_{LL} = 360	DL = 10 psf	DL = 20 psf	Maximum Span[1]			
Joist Spacing	E (psi)	f_b (psi)	f_b (psi)	(ft-in.)	(ft-in.)	(ft-in.)	(ft-in.)
12 in.	800,000	696	870	9 - 4	12 - 4	15 - 9	19 - 2
	900,000	753	941	9 - 9	12 - 10	16 - 5	19 - 11
	1,000,000	808	1,009	10 - 1	13 - 4	17 - 0	20 - 8
	1,100,000	861	1,076	10 - 5	13 - 9	17 - 6	21 - 4
	1,200,000	912	1,140	10 - 9	14 - 2	18 - 0	21 - 11
	1,300,000	962	1,202	11 - 0	14 - 6	18 - 6	22 - 6
	1,400,000	1,011	1,263	11 - 3	14 - 11	19 - 0	23 - 1
	1,500,000	1,058	1,323	11 - 7	15 - 3	19 - 5	23 - 7
	1,600,000	1,105	1,381	11 - 10	15 - 7	19 - 10	24 - 2
	1,700,000	1,150	1,438	12 - 0	15 - 10	20 - 3	24 - 8
	1,800,000	1,195	1,494	12 - 3	16 - 2	20 - 8	25 - 1
	1,900,000	1,239	1,549	12 - 6	16 - 6	21 - 0	25 - 7
	2,000,000	1,282	1,602	12 - 9	16 - 9	21 - 5	26-0*
	2,100,000	1,324	1,655	12 - 11	17 - 0	21 - 9	26-0*
	2,200,000	1,366	1,708	13 - 1	17 - 4	22 - 1	26-0*
	2,300,000	1,407	1,759	13 - 4	17 - 7	22 - 5	26-0*
	2,400,000	1,448	1,809	13 - 6	17 - 10	22 - 9	26-0*
16 in.	800,000	766	957	8 - 6	11 - 3	14 - 4	17 - 5
	900,000	829	1,036	8 - 10	11 - 8	14 - 11	18 - 1
	1,000,000	889	1,111	9 - 2	12 - 1	15 - 5	18 - 9
	1,100,000	947	1,184	9 - 6	12 - 6	15 - 11	19 - 4
	1,200,000	1,004	1,255	9 - 9	12 - 10	16 - 5	19 - 11
	1,300,000	1,059	1,323	10 - 0	13 - 2	16 - 10	20 - 6
	1,400,000	1,112	1,390	10 - 3	13 - 6	17 - 3	21 - 0
	1,500,000	1,165	1,456	10 - 6	13 - 10	17 - 8	21 - 6
	1,600,000	1,216	1,520	10 - 9	14 - 2	18 - 0	21 - 11
	1,700,000	1,266	1,583	10 - 11	14 - 5	18 - 5	22 - 5
	1,800,000	1,315	1,644	11 - 2	14 - 8	18 - 9	22 - 10
	1,900,000	1,363	1,704	11 - 4	15 - 0	19 - 1	23 - 3
	2,000,000	1,411	1,764	11 - 7	15 - 3	19 - 5	23 - 7
	2,100,000	1,458	1,822	11 - 9	15 - 6	19 - 9	24 - 0
	2,200,000	1,503	1,879	11 - 11	15 - 9	20 - 1	24 - 5
	2,300,000	1,549	1,936	12 - 1	15 - 11	20 - 4	24 - 9
	2,400,000	1,593	1,992	12 - 3	16 - 2	20 - 8	25 - 1
19.2 in.	800,000	814	1,017	8 - 0	10 - 7	13 - 6	16 - 5
	900,000	880	1,101	8 - 4	11 - 0	14 - 0	17 - 0
	1,000,000	945	1,181	8 - 8	11 - 4	14 - 6	17 - 8
	1,100,000	1,006	1,258	8 - 11	11 - 9	15 - 0	18 - 3
	1,200,000	1,067	1,333	9 - 2	12 - 1	15 - 5	18 - 9
	1,300,000	1,125	1,406	9 - 5	12 - 5	15 - 10	19 - 3
	1,400,000	1,182	1,478	9 - 8	12 - 9	16 - 3	19 - 9
	1,500,000	1,238	1,547	9 - 10	13 - 0	16 - 7	20 - 2
	1,600,000	1,292	1,615	10 - 1	13 - 4	17 - 0	20 - 8
	1,700,000	1,345	1,682	10 - 4	13 - 7	17 - 4	21 - 1
	1,800,000	1,398	1,747	10 - 6	13 - 10	17 - 8	21 - 6
	1,900,000	1,449	1,811	10 - 8	14 - 1	18 - 0	21 - 10
	2,000,000	1,499	1,874	10 - 10	14 - 4	18 - 3	22 - 3
	2,100,000	1,549	1,936	11 - 1	14 - 7	18 - 7	22 - 7
	2,200,000	1,598	1,997	11 - 3	14 - 9	18 - 10	22 - 11
	2,300,000	1,646	2,057	11 - 5	15 - 0	19 - 2	23 - 3
	2,400,000	1,693	2,116	11 - 7	15 - 3	19 - 5	23 - 7
24 in.	800,000	877	1,096	7 - 5	9 - 10	12 - 6	15 - 2
	900,000	948	1,186	7 - 9	10 - 2	13 - 0	15 - 10
	1,000,000	1,017	1,272	8 - 0	10 - 7	13 - 6	16 - 5
	1,100,000	1,084	1,355	8 - 3	10 - 11	13 - 11	16 - 11
	1,200,000	1,149	1,436	8 - 6	11 - 3	14 - 4	17 - 5
	1,300,000	1,212	1,515	8 - 9	11 - 6	14 - 8	17 - 11
	1,400,000	1,273	1,592	9 - 0	11 - 10	15 - 1	18 - 4
	1,500,000	1,333	1,667	9 - 2	12 - 1	15 - 5	18 - 9
	1,600,000	1,392	1,740	9 - 4	12 - 4	15 - 9	19 - 2
	1,700,000	1,449	1,812	9 - 7	12 - 7	16 - 1	19 - 7
	1,800,000	1,506	1,882	9 - 9	12 - 10	16 - 5	19 - 11
	1,900,000	1,561	1,951	9 - 11	13 - 1	16 - 8	20 - 3
	2,000,000	1,615	2,019	10 - 1	13 - 4	17 - 0	20 - 8
	2,100,000	1,669	2,086	10 - 3	13 - 6	17 - 3	21 - 0
	2,200,000	1,721	2,151	10 - 5	13 - 9	17 - 6	21 - 4
	2,300,000	1,773	2,216	10 - 7	13 - 11	17 - 9	21 - 7
	2,400,000	1,824	2,280	10 - 9	14 - 2	18 - 0	21 - 11

[1] Tabulated spans are calculated based on live load deflection only.

* Spans are limited to 26 feet in length. Check sources for availability of lumber in lengths greater than 20 feet.

Copyright © American Wood Council. Downloaded/printed pursuant to License Agreement. No reproduction or transfer authorized.

Table 2.7B Floor Joist Spans for 40 psf Live Load

(Living Areas)

				2x6	2x8	2x10	2x12
	L/Δ_{LL} = 360	DL = 10 psf	DL = 20 psf	Maximum Span[1]			
Joist Spacing	E (psi)	f_b (psi)	f_b (psi)	(ft-in.)	(ft-in.)	(ft-in.)	(ft-in.)
12 in.	800,000	718	862	8 - 6	11 - 3	14 - 4	17 - 5
	900,000	777	932	8 - 10	11 - 8	14 - 11	18 - 1
	1,000,000	833	1,000	9 - 2	12 - 1	15 - 5	18 - 9
	1,100,000	888	1,066	9 - 6	12 - 6	15 - 11	19 - 4
	1,200,000	941	1,129	9 - 9	12 - 10	16 - 5	19 - 11
	1,300,000	993	1,191	10 - 0	13 - 2	16 - 10	20 - 6
	1,400,000	1,043	1,251	10 - 3	13 - 6	17 - 3	21 - 0
	1,500,000	1,092	1,310	10 - 6	13 - 10	17 - 8	21 - 6
	1,600,000	1,140	1,368	10 - 9	14 - 2	18 - 0	21 - 11
	1,700,000	1,187	1,424	10 - 11	14 - 5	18 - 5	22 - 5
	1,800,000	1,233	1,480	11 - 2	14 - 8	18 - 9	22 - 10
	1,900,000	1,278	1,534	11 - 4	15 - 0	19 - 1	23 - 3
	2,000,000	1,323	1,587	11 - 7	15 - 3	19 - 5	23 - 7
	2,100,000	1,366	1,640	11 - 9	15 - 6	19 - 9	24 - 0
	2,200,000	1,410	1,691	11 - 11	15 - 9	20 - 1	24 - 5
	2,300,000	1,452	1,742	12 - 1	15 - 11	20 - 4	24 - 9
	2,400,000	1,494	1,792	12 - 3	16 - 2	20 - 8	25 - 1
16 in.	800,000	790	948	7 - 9	10 - 2	13 - 0	15 - 10
	900,000	855	1,026	8 - 0	10 - 7	13 - 6	16 - 5
	1,000,000	917	1,101	8 - 4	11 - 0	14 - 0	17 - 0
	1,100,000	977	1,173	8 - 7	11 - 4	14 - 6	17 - 7
	1,200,000	1,036	1,243	8 - 10	11 - 8	14 - 11	18 - 1
	1,300,000	1,092	1,311	9 - 1	12 - 0	15 - 3	18 - 7
	1,400,000	1,148	1,377	9 - 4	12 - 3	15 - 8	19 - 1
	1,500,000	1,202	1,442	9 - 6	12 - 7	16 - 0	19 - 6
	1,600,000	1,255	1,506	9 - 9	12 - 10	16 - 5	19 - 11
	1,700,000	1,306	1,568	9 - 11	13 - 1	16 - 9	20 - 4
	1,800,000	1,357	1,629	10 - 2	13 - 4	17 - 0	20 - 9
	1,900,000	1,407	1,688	10 - 4	13 - 7	17 - 4	21 - 1
	2,000,000	1,456	1,747	10 - 6	13 - 10	17 - 8	21 - 6
	2,100,000	1,504	1,805	10 - 8	14 - 1	17 - 11	21 - 10
	2,200,000	1,551	1,862	10 - 10	14 - 3	18 - 3	22 - 2
	2,300,000	1,598	1,918	11 - 0	14 - 6	18 - 6	22 - 6
	2,400,000	1,644	1,973	11 - 2	14 - 8	18 - 9	22 - 10
19.2 in.	800,000	840	1,008	7 - 3	9 - 7	12 - 3	14 - 11
	900,000	908	1,090	7 - 7	10 - 0	12 - 9	15 - 6
	1,000,000	975	1,170	7 - 10	10 - 4	13 - 2	16 - 0
	1,100,000	1,039	1,246	8 - 1	10 - 8	13 - 7	16 - 7
	1,200,000	1,101	1,321	8 - 4	11 - 0	14 - 0	17 - 0
	1,300,000	1,161	1,393	8 - 7	11 - 3	14 - 5	17 - 6
	1,400,000	1,220	1,464	8 - 9	11 - 7	14 - 9	17 - 11
	1,500,000	1,277	1,533	9 - 0	11 - 10	15 - 1	18 - 4
	1,600,000	1,333	1,600	9 - 2	12 - 1	15 - 5	18 - 9
	1,700,000	1,388	1,666	9 - 4	12 - 4	15 - 9	19 - 2
	1,800,000	1,442	1,731	9 - 6	12 - 7	16 - 0	19 - 6
	1,900,000	1,495	1,794	9 - 8	12 - 10	16 - 4	19 - 10
	2,000,000	1,547	1,857	9 - 10	13 - 0	16 - 7	20 - 2
	2,100,000	1,598	1,918	10 - 0	13 - 3	16 - 11	20 - 6
	2,200,000	1,649	1,978	10 - 2	13 - 5	17 - 2	20 - 10
	2,300,000	1,698	2,038	10 - 4	13 - 8	17 - 5	21 - 2
	2,400,000	1,747	2,096	10 - 6	13 - 10	17 - 8	21 - 6
24 in.	800,000	905	1,086	6 - 9	8 - 11	11 - 4	13 - 10
	900,000	979	1,174	7 - 0	9 - 3	11 - 10	14 - 4
	1,000,000	1,050	1,260	7 - 3	9 - 7	12 - 3	14 - 11
	1,100,000	1,119	1,342	7 - 6	9 - 11	12 - 8	15 - 4
	1,200,000	1,186	1,423	7 - 9	10 - 2	13 - 0	15 - 10
	1,300,000	1,251	1,501	7 - 11	10 - 6	13 - 4	16 - 3
	1,400,000	1,314	1,577	8 - 2	10 - 9	13 - 8	16 - 8
	1,500,000	1,376	1,651	8 - 4	11 - 0	14 - 0	17 - 0
	1,600,000	1,436	1,723	8 - 6	11 - 3	14 - 4	17 - 5
	1,700,000	1,495	1,795	8 - 8	11 - 5	14 - 7	17 - 9
	1,800,000	1,554	1,864	8 - 10	11 - 8	14 - 11	18 - 1
	1,900,000	1,611	1,933	9 - 0	11 - 11	15 - 2	18 - 5
	2,000,000	1,667	2,000	9 - 2	12 - 1	15 - 5	18 - 9
	2,100,000	1,722	2,066	9 - 4	12 - 3	15 - 8	19 - 1
	2,200,000	1,776	2,131	9 - 6	12 - 6	15 - 11	19 - 4
	2,300,000	1,829	2,195	9 - 7	12 - 8	16 - 2	19 - 8
	2,400,000	1,882	2,258	9 - 9	12 - 10	16 - 5	19 - 11

[1] Tabulated spans are calculated based on live load deflection only.

* Spans are limited to 26 feet in length. Check sources for availability of lumber in lengths greater than 20 feet.

Copyright © American Wood Council. Downloaded/printed pursuant to License Agreement. No reproduction or transfer authorized.

Table 2.7C Floor Joist Bearing Stresses for Floor Loads

			Floor Dead Load (psf)			
			10 psf		20 psf	
			Floor Live Load (psf)			
Joist Spacing	Bearing Area t x b	Joist Span (ft)	30 psf	40 psf	30 psf	40 psf
			Induced $f_{c\perp}$ (psi)[1]			
12 in.	1.5 in. x 1.5 in.	8	71	89	89	107
		12	107	133	133	160
		16	142	178	178	213
		20	178	222	222	267
		24	213	267	267	320
	1.5 in. x 3.5 in.	8	30	38	38	46
		12	46	57	57	69
		16	61	76	76	91
		20	76	95	95	114
		24	91	114	114	137
16 in.	1.5 in. x 1.5 in.	8	95	119	119	142
		12	142	178	178	213
		16	190	237	237	284
		20	237	296	296	356
		24	284	356	356	427
	1.5 in. x 3.5 in.	8	41	51	51	61
		12	61	76	76	91
		16	81	102	102	122
		20	102	127	127	152
		24	122	152	152	183
19.2 in.	1.5 in. x 1.5 in.	8	114	142	142	171
		12	171	213	213	256
		16	228	284	284	341
		20	284	356	356	427
		24	341	427	427	512
	1.5 in. x 3.5 in.	8	49	61	61	73
		12	73	91	91	110
		16	98	122	122	146
		20	122	152	152	183
		24	146	183	183	219
24 in.	1.5 in. x 1.5 in.	8	142	178	178	213
		12	213	267	267	320
		16	284	356	356	427
		20	356	444	444	533
		24	427	533	533	640
	1.5 in. x 3.5 in.	8	61	76	76	91
		12	91	114	114	137
		16	122	152	152	183
		20	152	190	190	229
		24	183	229	229	274

[1] Tabulated bearing stresses are intended for single span applications. For interior bearing points of continuous span applications, the tabulated bearing stresses shall be multiplied by 2.5.

Copyright © American Wood Council. Downloaded/printed pursuant to License Agreement. No reproduction or transfer authorized.

Table 2.8A Floor Framing Capacity Requirements for 30 psf Live Load

(Habitable Attics and Sleeping Areas)

		L/Δ_{LL} = 360	L/Δ_{LL} = 480	DL = 10 psf		DL = 20 psf	
		Required Capacities					
Framing Spacing	Maximum Span (ft)	Apparent Rigidity[1,2,5] (in.^{2} - lbs)		Moment (ft - lbs)	Bearing[3,4] (lbs)	Moment (ft - lbs)	Bearing[3,4] (lbs)
12 in.	10	20,250,000	27,000,000	500	200	625	250
	11	26,952,750	35,937,000	605	220	756	275
	12	34,992,000	46,656,000	720	240	900	300
	13	44,489,250	59,319,000	845	260	1,056	325
	14	55,566,000	74,088,000	980	280	1,225	350
	15	68,343,750	91,125,000	1,125	300	1,406	375
	16	82,944,000	110,592,000	1,280	320	1,600	400
	17	99,488,250	132,651,000	1,445	340	1,806	425
	18	118,098,000	157,464,000	1,620	360	2,025	450
	19	138,894,750	185,193,000	1,805	380	2,256	475
	20	162,000,000	216,000,000	2,000	400	2,500	500
	21	187,535,250	250,047,000	2,205	420	2,756	525
	22	215,622,000	287,496,000	2,420	440	3,025	550
	23	246,381,750	328,509,000	2,645	460	3,306	575
	24	279,936,000	373,248,000	2,880	480	3,600	600
	25	316,406,250	421,875,000	3,125	500	3,906	625
	26	355,914,000	474,552,000	3,380	520	4,225	650
16 in.	10	27,000,000	36,000,000	667	267	833	333
	11	35,937,000	47,916,000	807	293	1,008	367
	12	46,656,000	62,208,000	960	320	1,200	400
	13	59,319,000	79,092,000	1,127	347	1,408	433
	14	74,088,000	98,784,000	1,307	373	1,633	467
	15	91,125,000	121,500,000	1,500	400	1,875	500
	16	110,592,000	147,456,000	1,707	427	2,133	533
	17	132,651,000	176,868,000	1,927	453	2,408	567
	18	157,464,000	209,952,000	2,160	480	2,700	600
	19	185,193,000	246,924,000	2,407	507	3,008	633
	20	216,000,000	288,000,000	2,667	533	3,333	667
	21	250,047,000	333,396,000	2,940	560	3,675	700
	22	287,496,000	383,328,000	3,227	587	4,033	733
	23	328,509,000	438,012,000	3,527	613	4,408	767
	24	373,248,000	497,664,000	3,840	640	4,800	800
	25	421,875,000	562,500,000	4,167	667	5,208	833
	26	474,552,000	632,736,000	4,507	693	5,633	867
19.2 in.	10	32,400,000	43,200,000	800	320	1,000	400
	11	43,124,400	57,499,200	968	352	1,210	440
	12	55,987,200	74,649,600	1,152	384	1,440	480
	13	71,182,800	94,910,400	1,352	416	1,690	520
	14	88,905,600	118,540,800	1,568	448	1,960	560
	15	109,350,000	145,800,000	1,800	480	2,250	600
	16	132,710,400	176,947,200	2,048	512	2,560	640
	17	159,181,200	212,241,600	2,312	544	2,890	680
	18	188,956,800	251,942,400	2,592	576	3,240	720
	19	222,231,600	296,308,800	2,888	608	3,610	760
	20	259,200,000	345,600,000	3,200	640	4,000	800
	21	300,056,400	400,075,200	3,528	672	4,410	840
	22	344,995,200	459,993,600	3,872	704	4,840	880
	23	394,210,800	525,614,400	4,232	736	5,290	920
	24	447,897,600	597,196,800	4,608	768	5,760	960
	25	506,250,000	675,000,000	5,000	800	6,250	1,000
	26	569,462,400	759,283,200	5,408	832	6,760	1,040
24 in.	10	40,500,000	54,000,000	1,000	400	1,250	500
	11	53,905,500	71,874,000	1,210	440	1,513	550
	12	69,984,000	93,312,000	1,440	480	1,800	600
	13	88,978,500	118,638,000	1,690	520	2,113	650
	14	111,132,000	148,176,000	1,960	560	2,450	700
	15	136,687,500	182,250,000	2,250	600	2,813	750
	16	165,888,000	221,184,000	2,560	640	3,200	800
	17	198,976,500	265,302,000	2,890	680	3,613	850
	18	236,196,000	314,928,000	3,240	720	4,050	900
	19	277,789,500	370,386,000	3,610	760	4,513	950
	20	324,000,000	432,000,000	4,000	800	5,000	1,000
	21	375,070,500	500,094,000	4,410	840	5,513	1,050
	22	431,244,000	574,992,000	4,840	880	6,050	1,100
	23	492,763,500	657,018,000	5,290	920	6,613	1,150
	24	559,872,000	746,496,000	5,760	960	7,200	1,200
	25	632,812,500	843,750,000	6,250	1,000	7,813	1,250
	26	711,828,000	949,104,000	6,760	1,040	8,450	1,300

See footnotes 1-5.

Copyright © American Wood Council. Downloaded/printed pursuant to License Agreement. No reproduction or transfer authorized.

Table 2.8B Floor Framing Capacity Requirements for 40 psf Live Load

(Living Areas)

		L/Δ_{LL} = 360	L/Δ_{LL} = 480	DL = 10 psf		DL = 20 psf	
		Required Capacities					
Framing Spacing	Maximum Span (ft)	Apparent Rigidity[1,2,5] (in.^{2} - lbs)		Moment (ft - lbs)	Bearing[3,4] (lbs)	Moment (ft - lbs)	Bearing[3,4] (lbs)
12 in.	10	27,000,000	36,000,000	625	250	750	300
	11	35,937,000	47,916,000	756	275	908	330
	12	46,656,000	62,208,000	900	300	1,080	360
	13	59,319,000	79,092,000	1,056	325	1,268	390
	14	74,088,000	98,784,000	1,225	350	1,470	420
	15	91,125,000	121,500,000	1,406	375	1,688	450
	16	110,592,000	147,456,000	1,600	400	1,920	480
	17	132,651,000	176,868,000	1,806	425	2,168	510
	18	157,464,000	209,952,000	2,025	450	2,430	540
	19	185,193,000	246,924,000	2,256	475	2,708	570
	20	216,000,000	288,000,000	2,500	500	3,000	600
	21	250,047,000	333,396,000	2,756	525	3,308	630
	22	287,496,000	383,328,000	3,025	550	3,630	660
	23	328,509,000	438,012,000	3,306	575	3,968	690
	24	373,248,000	497,664,000	3,600	600	4,320	720
	25	421,875,000	562,500,000	3,906	625	4,688	750
	26	474,552,000	632,736,000	4,225	650	5,070	780
16 in.	10	36,000,000	48,000,000	833	333	1,000	400
	11	47,916,000	63,888,000	1,008	367	1,210	440
	12	62,208,000	82,944,000	1,200	400	1,440	480
	13	79,092,000	105,456,000	1,408	433	1,690	520
	14	98,784,000	131,712,000	1,633	467	1,960	560
	15	121,500,000	162,000,000	1,875	500	2,250	600
	16	147,456,000	196,608,000	2,133	533	2,560	640
	17	176,868,000	235,824,000	2,408	567	2,890	680
	18	209,952,000	279,936,000	2,700	600	3,240	720
	19	246,924,000	329,232,000	3,008	633	3,610	760
	20	288,000,000	384,000,000	3,333	667	4,000	800
	21	333,396,000	444,528,000	3,675	700	4,410	840
	22	383,328,000	511,104,000	4,033	733	4,840	880
	23	438,012,000	584,016,000	4,408	767	5,290	920
	24	497,664,000	663,552,000	4,800	800	5,760	960
	25	562,500,000	750,000,000	5,208	833	6,250	1,000
	26	632,736,000	843,648,000	5,633	867	6,760	1,040
19.2 in.	10	43,200,000	57,600,000	1,000	400	1,200	480
	11	57,499,200	76,665,600	1,210	440	1,452	528
	12	74,649,600	99,532,800	1,440	480	1,728	576
	13	94,910,400	126,547,200	1,690	520	2,028	624
	14	118,540,800	158,054,400	1,960	560	2,352	672
	15	145,800,000	194,400,000	2,250	600	2,700	720
	16	176,947,200	235,929,600	2,560	640	3,072	768
	17	212,241,600	282,988,800	2,890	680	3,468	816
	18	251,942,400	335,923,200	3,240	720	3,888	864
	19	296,308,800	395,078,400	3,610	760	4,332	912
	20	345,600,000	460,800,000	4,000	800	4,800	960
	21	400,075,200	533,433,600	4,410	840	5,292	1,008
	22	459,993,600	613,324,800	4,840	880	5,808	1,056
	23	525,614,400	700,819,200	5,290	920	6,348	1,104
	24	597,196,800	796,262,400	5,760	960	6,912	1,152
	25	675,000,000	900,000,000	6,250	1,000	7,500	1,200
	26	759,283,200	1,012,377,600	6,760	1,040	8,112	1,248
24 in.	10	54,000,000	72,000,000	1,250	500	1,500	600
	11	71,874,000	95,832,000	1,513	550	1,815	660
	12	93,312,000	124,416,000	1,800	600	2,160	720
	13	118,638,000	158,184,000	2,113	650	2,535	780
	14	148,176,000	197,568,000	2,450	700	2,940	840
	15	182,250,000	243,000,000	2,813	750	3,375	900
	16	221,184,000	294,912,000	3,200	800	3,840	960
	17	265,302,000	353,736,000	3,613	850	4,335	1,020
	18	314,928,000	419,904,000	4,050	900	4,860	1,080
	19	370,386,000	493,848,000	4,513	950	5,415	1,140
	20	432,000,000	576,000,000	5,000	1,000	6,000	1,200
	21	500,094,000	666,792,000	5,513	1,050	6,615	1,260
	22	574,992,000	766,656,000	6,050	1,100	7,260	1,320
	23	657,018,000	876,024,000	6,613	1,150	7,935	1,380
	24	746,496,000	995,328,000	7,200	1,200	8,640	1,440
	25	843,750,000	1,125,000,000	7,813	1,250	9,375	1,500
	26	949,104,000	1,265,472,000	8,450	1,300	10,140	1,560

See footnotes 1-5.

Copyright © American Wood Council. Downloaded/printed pursuant to License Agreement. No reproduction or transfer authorized.

Footnotes to Tables 2.8A-B

[1] Apparent rigidity capacities shall include the effects of both bending and shear deflections. Apparent rigidity capacities have been adjusted for solid-sawn lumber to account for these effects. Contact the I-joist manufacturer for apparent rigidity capacities to be used for I-joists in this table.

[2] Tabulated apparent rigidity requirements assume single span conditions. For continuous span conditions, tabulated apparent rigidity requirements shall be permitted to be multiplied by 0.75.

[3] Tabulated bearing capacity requirements are intended for single span applications. For bearing capacity requirements for interior bearing points of continuous span applications, the tabulated bearing capacities shall be multiplied by 2.5.

[4] Tabulated bearing capacity requirements are applicable when determining shear capacity requirements for single span applications. For shear capacity requirements of continuous span applications, the tabulated bearing capacities shall be multiplied by 1.25.

[5] Tabulated apparent rigidity requirements are calculated based on live load deflection only.

Copyright © American Wood Council. Downloaded/printed pursuant to License Agreement. No reproduction or transfer authorized.
AMERICAN WOOD COUNCIL

Table 2.9A Exterior Wall Stud Bending Stresses from Wind Loads

Wind Speed 3-second gust (mph) (See Figure 1.1)		Minimum Induced Bending Stress			90			95			100			105		
Stud Size		2x4	2x6	2x8	2x4	2x6	2x8	2x4	2x6	2x8	2x4	2x6	2x8	2x4	2x6	2x8
Wall Height	Stud Spacing	Min. f_b (psi) [3,4,5]			Induced f_b (psi) [1,2,3,4,5]											
8 ft	12 in.	280	113	65	325	132	76	362	147	84	402	163	94	443	179	103
	16 in.	374	151	87	434	176	101	483	196	113	535	217	125	590	239	138
	24 in.	560	227	131	650	263	152	725	294	169	803	325	187	885	359	206
10 ft	12 in.	444	180	104	492	199	115	548	222	128	607	246	141	669	271	156
	16 in.	592	240	138	655	265	153	730	296	170	809	328	189	892	361	208
	24 in.	888	360	207	983	398	229	1095	444	255	1214	491	283	1338	542	312
12 ft	12 in.	646	261	150	686	278	160	764	310	178	847	343	197	934	378	218
	16 in.	861	349	201	915	370	213	1019	413	238	1129	457	263	1245	504	290
	24 in.	1291	523	301	1372	556	320	1529	619	356	1694	686	395	1867	756	435
14 ft	12 in.	885	358	206	907	367	211	1011	409	236	1120	453	261	1234	500	288
	16 in.	1180	478	275	1209	490	282	1347	546	314	1493	605	348	1646	667	384
	24 in.	1770	717	412	1814	735	423	2021	818	471	2239	907	522	2469	1000	575
16 ft	12 in.	1162	470	271	1153	467	269	1285	520	299	1423	576	332	1569	635	366
	16 in.	1549	627	361	1537	623	358	1713	694	399	1898	769	442	2092	847	488
	24 in.	2324	941	542	2306	934	537	2569	1040	599	2847	1153	663	3138	1271	731
18 ft	12 in.	1476	598	344	1423	576	332	1585	642	369	1756	711	409	1936	784	451
	16 in.	1968	797	459	1897	768	442	2113	856	493	2342	948	546	2582	1046	602
	24 in.	2952	1196	688	2845	1152	663	3170	1284	739	3513	1423	819	3873	1568	903
20 ft	12 in.	1828	740	426	1715	695	400	1911	774	445	2117	857	493	2334	945	544
	16 in.	2438	987	568	2287	926	533	2548	1032	594	2823	1143	658	3113	1260	725
	24 in.	3657	1481	852	3430	1389	799	3822	1548	891	4235	1715	987	4669	1891	1088

1 Tabulated bending stresses are based on C&C wind loads and assume a building located in Exposure B with a mean roof height of 33 feet. For buildings located in Exposures B with mean roof heights less than 33 feet, or in Exposures C and D, tabulated values shall be adjusted in accordance with Section 2.1.3.1.

2 Tabulated bending stresses shall be permitted to be multiplied by 0.92 for framing not located within 3 feet of corners for buildings less than 30 feet in width (W), or within W/10 of corners for buildings greater than 30 feet in width.

3 The tabulated bending stress (f_b) shall be less than or equal to the allowable bending design value (F_b').

4 To check deflections, use the tabulated loads in Table 2.10 and deflection criteria per the building code.

5 Adjusted induced bending stresses shall not be less than the tabulated minimum induced bending stress.

Copyright © American Wood Council. Downloaded/printed pursuant to License Agreement. No reproduction or transfer authorized.
AMERICAN WOOD COUNCIL

Table 2.9A Exterior Wall Stud Bending Stresses from Wind Loads (Cont.)

Wind Speed 3-second gust (mph) (See Figure 1.1)		Minimum Induced Bending Stress			110			115			120			130		
Stud Size		2x4	2x6	2x8	2x4	2x6	2x8	2x4	2x6	2x8	2x4	2x6	2x8	2x4	2x6	2x8
Wall Height	Stud Spacing	Min. f_b (psi) [3,4,5]			Induced f_b (psi)[1,2,3, 4, 5]											
8 ft	12 in.	280	113	65	486	197	113	531	215	124	578	234	135	679	275	158
	16 in.	374	151	87	648	262	151	708	287	165	771	312	180	905	366	211
	24 in.	560	227	131	972	394	226	1062	430	248	1156	468	270	1357	550	316
10 ft	12 in.	444	180	104	734	297	171	803	325	187	874	354	204	1026	415	239
	16 in.	592	240	138	979	396	228	1070	433	249	1165	472	272	1367	554	319
	24 in.	888	360	207	1469	595	342	1605	650	374	1748	708	407	2051	831	478
12 ft	12 in.	646	261	150	1025	415	239	1120	454	261	1220	494	284	1431	580	334
	16 in.	861	349	201	1366	553	318	1493	605	348	1626	658	379	1908	773	445
	24 in.	1291	523	301	2050	830	478	2240	907	522	2439	988	568	2863	1159	667
14 ft	12 in.	885	358	206	1355	549	316	1481	600	345	1612	653	376	1892	766	441
	16 in.	1180	478	275	1806	732	421	1974	800	460	2150	871	501	2523	1022	588
	24 in.	1770	717	412	2710	1097	631	2962	1199	690	3225	1306	752	3785	1533	882
16 ft	12 in.	1162	470	271	1722	697	401	1882	762	439	2050	830	478	2405	974	561
	16 in.	1549	627	361	2296	930	535	2510	1016	585	2733	1107	637	3207	1299	747
	24 in.	2324	941	542	3444	1395	803	3765	1525	877	4099	1660	955	4811	1948	1121
18 ft	12 in.	1476	598	344	2125	861	495	2323	941	541	2529	1024	589	2968	1202	692
	16 in.	1968	797	459	2834	1147	660	3097	1254	722	3372	1366	786	3958	1603	922
	24 in.	2952	1196	688	4250	1721	991	4646	1881	1083	5058	2048	1179	5937	2404	1384
20 ft	12 in.	1828	740	426	2562	1038	597	2800	1134	653	3049	1235	711	3578	1449	834
	16 in.	2438	987	568	3416	1383	796	3734	1512	870	4065	1646	947	4771	1932	1112
	24 in.	3657	1481	852	5124	2075	1194	5600	2268	1305	-	2469	1421	-	2898	1668

1 Tabulated bending stresses are based on C&C wind loads and assume a building located in Exposure B with a mean roof height of 33 feet. For buildings located in Exposures B with mean roof heights less than 33 feet, or in Exposures C and D, tabulated values shall be adjusted in accordance with Section 2.1.3.1.

2 Tabulated bending stresses shall be permitted to be multiplied by 0.92 for framing not located within 3 feet of corners for buildings less than 30 feet in width (W), or within W/10 of corners for buildings greater than 30 feet in width.

3 The tabulated bending stress (f_b) shall be less than or equal to the allowable bending design value (F_b').

4 To check deflections, use the tabulated loads in Table 2.10 and deflection criteria per the building code.

5 Adjusted induced bending stresses shall not be less than the tabulated minimum induced bending stress.

Copyright © American Wood Council. Downloaded/printed pursuant to License Agreement. No reproduction or transfer authorized.
AMERICAN WOOD COUNCIL

Table 2.9A Exterior Wall Stud Bending Stresses from Wind Loads (Cont.)

Wind Speed 3-second gust (mph) (See Figure 1.1)		Minimum Induced Bending Stress			140			150			160			170		
Stud Size		2x4	2x6	2x8	2x4	2x6	2x8	2x4	2x6	2x8	2x4	2x6	2x8	2x4	2x6	2x8
Wall Height	Stud Spacing	Min. f_b (psi) [3,4,5]			Induced f_b (psi) [1,2,3,4,5]											
8 ft	12 in.	280	113	65	787	319	183	903	366	211	1028	416	240	1160	470	270
	16 in.	374	151	87	1049	425	245	1205	488	281	1371	555	319	1547	627	361
	24 in.	560	227	131	1574	637	367	1807	732	421	2056	833	479	2321	940	541
10 ft	12 in.	444	180	104	1189	482	277	1365	553	318	1553	629	362	1754	710	409
	16 in.	592	240	138	1586	642	370	1820	737	424	2071	839	483	2338	947	545
	24 in.	888	360	207	2379	963	554	2731	1106	636	3107	1258	724	3507	1420	817
12 ft	12 in.	646	261	150	1660	672	387	1906	772	444	2168	878	505	2448	991	570
	16 in.	861	349	201	2213	896	516	2541	1029	592	2891	1171	674	3263	1322	761
	24 in.	1291	523	301	3320	1344	774	3811	1543	888	4336	1756	1011	4895	1982	1141
14 ft	12 in.	885	358	206	2195	889	511	2519	1020	587	2866	1161	668	3236	1310	754
	16 in.	1180	478	275	2926	1185	682	3359	1360	783	3822	1548	891	4314	1747	1006
	24 in.	1770	717	412	4389	1777	1023	5039	2040	1174	5733	2322	1336	-	2621	1508
16 ft	12 in.	1162	470	271	2790	1130	650	3203	1297	746	3644	1476	849	4113	1666	959
	16 in.	1549	627	361	3720	1506	867	4270	1729	995	4858	1967	1132	5485	2221	1278
	24 in.	2324	941	542	5580	2259	1300	-	2594	1493	-	2951	1698	-	3332	1917
18 ft	12 in.	1476	598	344	3442	1394	802	3952	1600	921	4496	1821	1048	5076	2056	1183
	16 in.	1968	797	459	4590	1859	1070	5269	2134	1228	5995	2428	1397	-	2741	1577
	24 in.	2952	1196	688	-	2788	1605	-	3201	1842	-	3642	2096	-	4111	2366
20 ft	12 in.	1828	740	426	4150	1681	967	4764	1929	1110	5420	2195	1263	-	2478	1426
	16 in.	2438	987	568	5533	2241	1290	-	2572	1480	-	2927	1684	-	3304	1901
	24 in.	3657	1481	852	-	3361	1934	-	3859	2221	-	4390	2527	-	4956	2852

1 Tabulated bending stresses are based on C&C wind loads and a building located in Exposure B with a mean roof height of 33 feet. For buildings located in Exposures B with mean roof heights less than 33 feet, or in Exposures C and D, tabulated values shall be adjusted in accordance with Section 2.1.3.1.

2 Tabulated bending stresses shall be permitted to be multiplied by 0.92 for framing not located within 3 feet of corners for buildings less than 30 feet in width (W), or within W/10 of corners for buildings greater than 30 feet in width.

3 The tabulated bending stress (f_b) shall be less than or equal to the allowable bending design value (F_b').

4 To check deflections, use the tabulated loads in Table 2.10 and deflection criteria per the building code.

5 Adjusted induced bending stresses shall not be less than the tabulated minimum induced bending stress.

Copyright © American Wood Council. Downloaded/printed pursuant to License Agreement. No reproduction or transfer authorized.

Table 2.9A Exterior Wall Stud Bending Stresses from Wind Loads (Cont.)

Wind Speed 3-second gust (mph) (See Figure 1.1)		Minimum Induced Bending Stress			180			195		
Stud Size		2x4	2x6	2x8	2x4	2x6	2x8	2x4	2x6	2x8
Wall Height	Stud Spacing	Min. f_b (psi) [3,4,5]			Induced f_b (psi) [1,2,3, 4, 5]					
8 ft	12 in.	280	113	65	1301	527	303	1527	618	356
	16 in.	374	151	87	1735	702	404	2036	824	474
	24 in.	560	227	131	2602	1054	606	3054	1237	712
10 ft	12 in.	444	180	104	1966	796	458	2307	934	538
	16 in.	592	240	138	2621	1062	611	3077	1246	717
	24 in.	888	360	207	3932	1592	916	4615	1869	1076
12 ft	12 in.	646	261	150	2744	1111	640	3220	1304	751
	16 in.	861	349	201	3659	1482	853	4294	1739	1001
	24 in.	1291	523	301	5488	2222	1279	-	2608	1501
14 ft	12 in.	885	358	206	3628	1469	845	4258	1724	992
	16 in.	1180	478	275	4837	1959	1127	5677	2299	1323
	24 in.	1770	717	412	-	2938	1691	-	3448	1985
16 ft	12 in.	1162	470	271	4612	1868	1075	5412	2192	1261
	16 in.	1549	627	361	-	2490	1433	-	2922	1682
	24 in.	2324	941	542	-	3735	2150	-	4383	2523
18 ft	12 in.	1476	598	344	5691	2304	1326	-	2705	1556
	16 in.	1968	797	459	-	3073	1768	-	3606	2075
	24 in.	2952	1196	688	-	4609	2652	-	5409	3113
20 ft	12 in.	1828	740	426	-	2778	1599	-	3260	1876
	16 in.	2438	987	568	-	3704	2132	-	4347	2502
	24 in.	3657	1481	852	-	5556	3198	-	-	3753

1 Tabulated bending stresses are based on C&C wind loads and assume a building located in Exposure B with a mean roof height of 33 feet. For buildings located in Exposures B with mean roof heights less than 33 feet, or in Exposures C and D, tabulated values shall be adjusted in accordance with Section 2.1.3.1.

2 Tabulated bending stresses shall be permitted to be multiplied by 0.92 for framing not located within 3 feet of corners for buildings less than 30 feet in width (W), or within W/10 of corners for buildings greater than 30 feet in width.

3 The tabulated bending stress (f_b) shall be less than or equal to the allowable bending design value (F_b').

4 To check deflections, use the tabulated loads in Table 2.10 and deflection criteria per the building code.

5 Adjusted induced bending stresses shall not be less than the tabulated minimum induced bending stress.

Copyright © American Wood Council. Downloaded/printed pursuant to License Agreement. No reproduction or transfer authorized.

Table 2.9B Exterior Wall Stud Compression Stresses

Dead Load Assumptions: Roof Assembly DL = 20 psf, Wall Assembly DL = 121 plf, Floor Assembly DL = 10 psf, Floor LL = 40 psf

Ground Snow Load or Roof Live Load			20 psf RLL				30 psf GSL				50 psf GSL				70 psf GSL			
			Building Width (ft)															
Loadbearing Wall Supporting	Stud Spacing	Stud Size	12	24	36	60	12	24	36	60	12	24	36	60	12	24	36	60
			Induced f_c (psi)[1]															
Roof & Clear Span Ceiling	12 in.	2x4	84	130	175	267	92	140	188	286	117	182	247	380	142	224	307	473
		2x6	53	83	112	170	58	89	120	182	74	116	157	242	91	143	195	301
		2x8	41	63	85	129	44	67	91	138	56	88	119	183	69	108	148	229
	16 in.	2x4	112	173	234	356	122	186	251	381	156	243	330	506	190	299	409	631
		2x6	71	110	149	226	78	119	160	242	99	154	210	322	121	190	260	402
		2x8	54	83	113	172	59	90	121	184	75	117	159	244	92	144	197	305
	24 in.	2x4	168	259	351	534	183	279	376	572	234	364	495	-	285	448	613	-
		2x6	107	165	223	340	117	178	239	364	149	232	315	483	181	285	390	603
		2x8	81	125	169	258	88	135	182	276	113	176	239	367	138	216	296	457
Center Bearing Roof & Ceiling	12 in.	2x4	61	84	107	153	73	100	128	172	93	131	171	230	113	162	213	291
		2x6	39	53	68	97	46	64	82	109	59	84	109	147	72	103	136	185
		2x8	30	41	52	74	35	48	62	83	45	63	82	111	55	78	103	141
	16 in.	2x4	82	112	142	203	97	134	171	229	124	175	228	307	151	217	284	388
		2x6	52	71	91	129	62	85	109	146	79	111	145	196	96	138	181	247
		2x8	39	54	69	98	47	64	83	111	60	85	110	148	73	105	137	187
	24 in.	2x4	122	168	214	305	145	200	257	344	186	263	342	461	226	325	426	582
		2x6	78	107	136	194	92	128	163	219	118	167	217	293	144	207	271	371
		2x8	59	81	103	147	70	97	124	166	90	127	165	223	109	157	206	281
Roof, Ceiling, & 1 Center Bearing Floor	12 in.	2x4	122	185	248	374	128	193	258	388	147	224	302	458	171	259	347	529
		2x6	78	118	158	238	81	123	164	247	94	143	192	292	109	165	221	336
		2x8	59	89	120	180	62	93	124	187	71	108	146	221	83	125	167	255
	16 in.	2x4	163	247	331	498	171	257	343	517	196	299	403	611	228	345	462	-
		2x6	104	157	210	317	109	163	219	329	125	190	256	389	145	219	294	449
		2x8	79	119	160	241	82	124	166	250	95	144	194	295	110	166	223	340
	24 in.	2x4	245	370	496	-	256	385	515	-	294	449	604	-	342	517	-	-
		2x6	156	236	316	476	163	245	328	494	187	285	384	583	218	329	441	-
		2x8	118	179	239	361	124	186	249	375	142	217	292	442	165	250	335	510
Roof, Ceiling, & 1 Clear Span Floor	12 in.	2x4	145	231	317	488	151	238	326	502	170	270	371	573	189	302	415	643
		2x6	92	147	201	311	96	152	208	320	108	172	236	364	120	192	264	409
		2x8	70	111	153	236	73	115	157	242	82	130	179	276	91	146	200	310
	16 in.	2x4	194	308	422	651	201	318	435	-	227	360	494	-	252	402	553	-
		2x6	123	196	269	414	128	202	277	426	144	229	314	486	160	256	352	546
		2x8	93	149	204	314	97	153	210	323	109	174	239	369	122	194	267	414
	24 in.	2x4	290	462	633	-	302	477	652	-	340	540	-	-	378	603	-	-
		2x6	185	294	403	621	192	303	415	639	216	344	472	-	240	384	528	-
		2x8	140	223	306	471	146	230	315	485	164	261	358	553	182	291	401	621
Center Bearing Roof, Ceiling, & 1 Floor	12 in.	2x4	102	145	188	274	111	157	204	288	126	181	236	332	142	204	268	378
		2x6	65	92	120	174	71	100	130	183	80	115	150	211	90	130	170	240
		2x8	49	70	91	132	54	76	99	139	61	87	114	160	69	98	129	182
	16 in.	2x4	136	194	251	365	148	210	272	384	168	241	315	443	189	272	357	503
		2x6	87	123	160	232	94	133	173	245	107	153	200	282	120	173	227	320
		2x8	66	93	121	176	71	101	131	186	81	116	152	214	91	131	172	243
	24 in.	2x4	205	290	376	547	222	315	408	576	252	361	472	-	284	408	535	-
		2x6	130	185	239	348	141	200	260	367	160	230	300	423	181	260	341	481
		2x8	99	140	182	264	107	152	197	278	122	174	228	321	137	197	258	365

[1] Tabulated compression stresses (f_c) shall be less than or equal to the allowable compression perpendicular to grain design value ($F_{c\perp}'$) for top and bottom plates, and less than or equal to the allowable compression parallel to grain design value ($F_{c\parallel}'$) for studs.

Copyright © American Wood Council. Downloaded/printed pursuant to License Agreement. No reproduction or transfer authorized.

Table 2.9B Exterior Wall Stud Compression Stresses (Cont.)

Dead Load Assumptions: Roof Assembly DL = 20 psf, Wall Assembly DL = 121 plf, Floor Assembly DL = 10 psf, Floor LL = 40 psf

Ground Snow Load or Roof Live Load			20 psf RLL				30 psf GSL				50 psf GSL				70 psf GSL			
			Building Width (ft)															
Loadbearing Wall Supporting	Stud Spacing	Stud Size	12	24	36	60	12	24	36	60	12	24	36	60	12	24	36	60
			Induced f_c (psi)[1]															
Roof, Ceiling, & 2 Center Bearing Floors 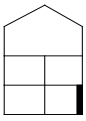	12 in.	2x4	168	254	340	511	174	261	349	525	193	293	394	596	212	325	438	-
		2x6	107	162	216	325	111	166	222	334	123	187	250	379	135	207	279	424
		2x8	81	123	164	247	84	126	169	254	93	141	190	288	102	157	211	322
	16 in.	2x4	224	339	453	-	232	349	466	-	257	391	525	-	283	433	584	-
		2x6	143	215	288	434	148	222	296	446	164	249	334	505	180	276	372	565
		2x8	108	163	219	329	112	168	225	338	124	189	253	383	136	209	282	429
	24 in.	2x4	336	508	-	-	348	523	-	-	386	586	-	-	424	649	-	-
		2x6	214	323	432	650	221	333	444	-	246	373	501	-	270	413	557	-
		2x8	162	245	328	493	168	252	337	507	186	283	380	575	205	314	423	643
Roof, Ceiling, & 2 Clear Span Floors 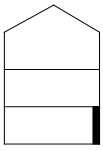	12 in.	2x4	214*	351*	488*	-	220	353	488*	-	239	385	531	-	258	416	575	-
		2x6	136*	223*	311*	485*	140	225	311*	485*	152	245	338	524	164	265	366	569
		2x8	103*	169*	236*	368*	106	170	236*	368*	115	186	256	398	124	201	278	432
	16 in.	2x4	285*	468*	651*	-	293	470	651*	-	318	513	-	-	344	555	-	-
		2x6	181*	298*	414*	647*	186	299	414*	647*	203	326	450	-	219	353	488	-
		2x8	138*	226*	314*	491*	141	227	314*	491*	154	247	342	531	166	268	370	576
	24 in.	2x4	428*	-	-	-	439	-	-	-	477	-	-	-	515	-	-	-
		2x6	272*	447*	621*	-	280	449	621*	-	304	489	-	-	328	530	-	-
		2x8	207*	339*	471*	-	212	341	471*	-	230	371	512	-	249	402	555	-
Center Bearing Roof, Ceiling, & 2 Floors 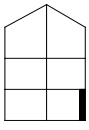	12 in.	2x4	148	214	282	420	157	226	296	426	172	249	328	469	187	273	359	515
		2x6	94	136	180	267	100	144	188	271	109	159	208	299	119	174	229	328
		2x8	72	103	136	203	76	109	143	205	83	120	158	227	90	132	173	249
	16 in.	2x4	198	285	377	559	209	301	394	567	229	333	437	626	250	364	479	-
		2x6	126	181	240	356	133	192	251	361	146	212	278	398	159	231	305	437
		2x8	95	138	182	270	101	146	190	274	111	161	211	302	121	176	231	331
	24 in.	2x4	296	428	565	-	314	452	592	-	344	499	655	-	374	545	-	-
		2x6	189	272	360	534	200	288	376	542	219	317	417	598	238	347	457	655
		2x8	143	207	273	405	151	218	286	411	166	241	316	453	181	263	347	497

[1] Tabulated compression stresses (f_c) shall be less than or equal to the allowable compression perpendicular to grain design value ($F_{c\perp}'$) for top and bottom plates, and less than or equal to the allowable compression parallel to grain design value ($F_{c||}'$) for studs.

* Tabulated compression stresses are based on the maximum load combination: Dead Load + Floor Live Load (i.e. D + L). Reduced unit loads are permitted for load combinations that include Roof Live Load (RLL) and Ground Snow Load (GSL).

Copyright © American Wood Council. Downloaded/printed pursuant to License Agreement. No reproduction or transfer authorized.
AMERICAN WOOD COUNCIL

Table 2.9C Interior Loadbearing Wall Stud Compression Stresses from Live Loads

Dead Load Assumptions: Wall Assembly DL = 121 plf, Floor Assembly DL = 10 psf, Floor LL = 40 psf

Loadbearing Wall Supporting	Stud Spacing	Stud Size	Building Width (ft) 12	24	36	60
			Induced f_c (psi)[1]			
1 Floor Only 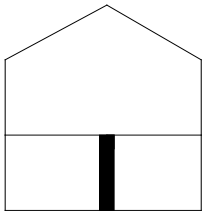	**12 in.**	**2x4**	103	160	218	332
		2x6	66	102	138	211
		2x8	50	77	105	160
	16 in.	**2x4**	138	214	290	442
		2x6	88	136	185	282
		2x8	66	103	140	214
	24 in.	**2x4**	206	321	435	664
		2x6	131	204	277	422
		2x8	100	155	210	320
2 Floors Only 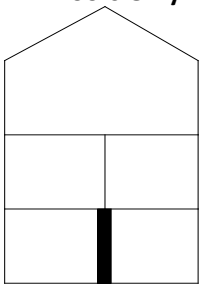	**12 in.**	**2x4**	179	294	408	636
		2x6	114	187	260	405
		2x8	87	142	197	307
	16 in.	**2x4**	239	391	544	849
		2x6	152	249	346	540
		2x8	115	189	262	410
	24 in.	**2x4**	358	587	816	1273
		2x6	228	374	519	810
		2x8	173	283	394	614

[1] Tabulated compression stresses (f_c) shall be less than or equal to the allowable compression perpendicular to grain design value ($F_{c\perp}'$) for top and bottom plates, and less than or equal to the allowable compression parallel to grain design value ($F_{c||}'$) for studs.

Copyright © American Wood Council. Downloaded/printed pursuant to License Agreement. No reproduction or transfer authorized.
AMERICAN WOOD COUNCIL

Table 2.10 Exterior Wall Stud Wind Loads (Normal to the Wall Surface)

Wind Speed 3-second gust (mph) (See Figure 1.1)	90	95	100	105	110	115	120	130	140	150	160	170	180	195
Wall Stud Height (ft)	Wind Load on Stud (psf)[1,2, 3]													
8	11.2	12.5	13.8	15.2	16.7	18.2	19.9	23.3	27.0	31.0	35.3	39.8	44.6	52.4
10	10.7	11.9	13.2	14.5	15.9	17.4	18.9	22.2	25.8	29.6	33.6	38.0	42.5	49.9
12	10.2	11.4	12.6	13.9	15.3	16.7	18.2	21.3	24.7	28.4	32.3	36.4	40.8	47.9
14	9.9	11.0	12.2	13.4	14.7	16.1	17.5	20.6	23.9	27.4	31.1	35.2	39.4	46.2
16	9.6	10.7	11.8	13.0	14.3	15.6	17.0	19.9	23.1	26.5	30.2	34.0	38.2	44.8
18	9.3	10.4	11.5	12.6	13.9	15.2	16.5	19.4	22.4	25.7	29.3	33.1	37.1	43.5
20	9.1	10.1	11.2	12.3	13.5	14.8	16.1	18.8	21.8	25.1	28.5	32.2	36.1	42.3

1 Tabulated values are based on C&C wind loads and assume a building located in Exposure B with a mean roof height of 33 feet. For buildings located in Exposures B with mean roof heights less than 33 feet, or in Exposures C or D, tabulated values shall be adjusted in accordance with Section 2.1.3.1.

2 Tabulated values shall be permitted to be multiplied by 0.92 for framing not located within 3 feet of corners for buildings less than 30 feet in width (W), or within W/10 of corners for buildings greater than 30 feet in width.

3 Adjusted wind loads shall not be less than 9.6 psf.

Copyright © American Wood Council. Downloaded/printed pursuant to License Agreement. No reproduction or transfer authorized.
AMERICAN WOOD COUNCIL

Table 2.11 Loadbearing Wall Loads from Snow or Live Loads

(For Wall Studs, Headers, and Girders)

Dead Load Assumptions: Roof Assembly DL = 20 psf, Wall Assembly DL = 121 plf, Floor Assembly DL = 10 psf, Floor LL = 40 psf

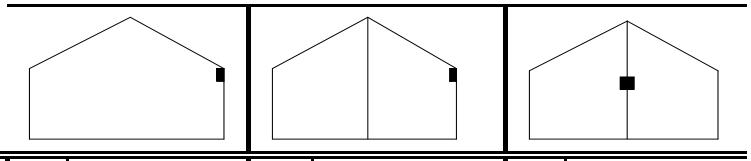

Ground Snow Load or Roof Live Load (psf)	RLL	GSL			RLL	GSL			RLL	GSL		
	20	30	50	70	20	30	50	70	20	30	50	70
Roof Span (ft)	Unit Header/Girder Beam Loads (plf)[1]											
12	320	360	493	627	200	260	367	473	240	259	351	443
24	560	613	834	1056	320	405	568	732	480	517	702	887
36	800	867	1178	1489	440	553	776	998	720	776	1053	1330
60	1280	1379	1872	2365	680	782	1089	1407	1200	1293	1755	2217

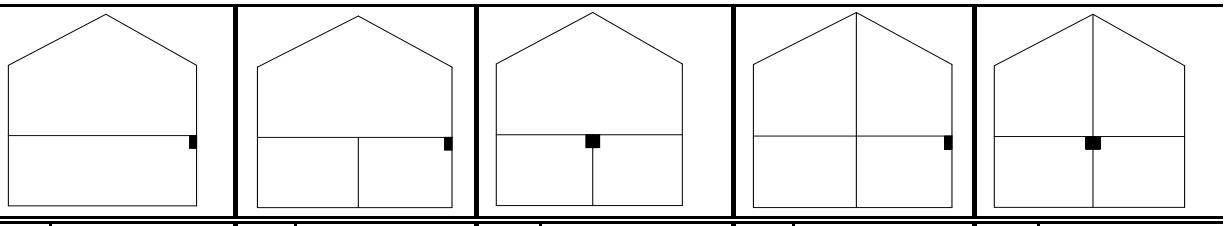

Ground Snow Load or Roof Live Load (psf)	RLL	GSL			RLL	GSL			RLL	GSL			RLL	GSL			RLL	GSL		
	20	30	50	70	20	30	50	70	20	30	50	70	20	30	50	70	20	30	50	70
Roof Span (ft)	Unit Header/Girder Beam Loads (plf)[1]																			
12	641	671	771	871	521	551	651	778	300*	300*	300*	300*	416	461	541	624	571	585	654	724
24	1091	1130	1297	1463	851	890	1057	1237	600*	600*	600*	600*	641	705	827	950	1021	1049	1188	1326
36	1541	1591	1824	2058	1181	1231	1464	1700	900*	900*	900*	900*	866	951	1118	1284	1471	1513	1721	1929
60	2441	2515	2885	3255	1841	1915	2285	2655	1500*	1500*	1500*	1500*	1316	1392	1623	1862	2371	2441	2787	3134

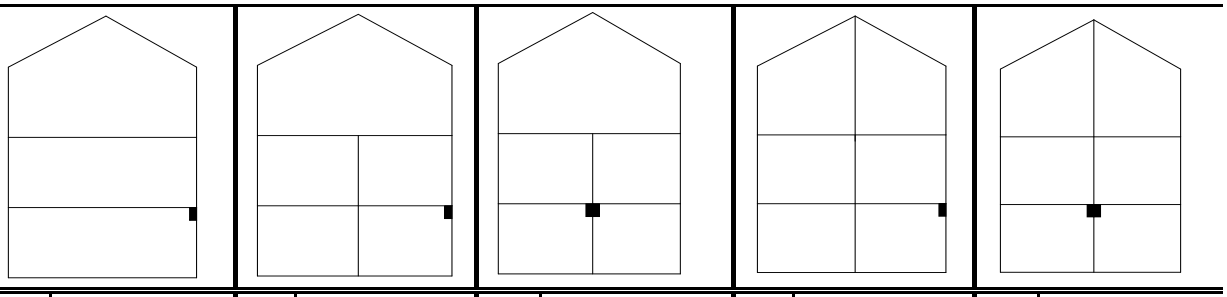

Ground Snow Load or Roof Live Load (psf)	RLL	GSL			RLL	GSL			RLL	GSL			RLL	GSL			RLL	GSL		
	20	30	50	70	20	30	50	70	20	30	50	70	20	30	50	70	20	30	50	70
Roof Span (ft)	Unit Header/Girder Beam Loads (plf)[1]																			
12	1002*	1032	1132	1232	762	792	892	992	721*	721*	721*	721*	657	702	782	862	962*	962*	1015	1085
24	1722*	1731	1898	2064	1212	1251	1418	1584	1321*	1321*	1321*	1321*	1002	1066	1188	1311	1682*	1682*	1789	1927
36	2442*	2442*	2665	2899	1662	1712	1945	2179	1921*	1921*	1921*	1921*	1362	1432	1599	1765	2402*	2402*	2562	2770
60	3882*	3882*	4206	4576	2562	2636	3006	3376	3121*	3121*	3121*	3121*	2082	2113	2344	2583	3842*	3842*	4108	4455

[1] Tabulated loads assume simply-supported single span floor joists. For continuous two span floor joists, loads on interior loadbearing walls, headers, and girders shall be multiplied by 1.25.

* Tabulated unit header/girder beam loads (plf) are based on the maximum load combination: Dead Load + Floor Live Load (i.e. D + L). Reduced unit loads are permitted for load combinations that include Roof Live Load (RLL) and Ground Snow Load (GSL).

Copyright © American Wood Council. Downloaded/printed pursuant to License Agreement. No reproduction or transfer authorized.

Table 2.12A1 Ceiling Joist Spans

LL = 10 psf, L/Δ_{LL} = 240

(Uninhabitable Attics Without Storage) Live Load=10 psf, L/Δ_{LL}=240, Flexible Finish (including gypsum board)

			2x4	2x6	2x8	2x10
	L/Δ_{LL}= 240	DL = 5 psf	Maximum Span[1,2]			
Joist Spacing	E (psi)	f_b (psi)	(ft-in.)	(ft-in.)	(ft-in.)	(ft-in.)
12 in.	800,000	711	9 - 10	15 - 6	20 - 5	26-0*
	900,000	769	10 - 3	16 - 1	21 - 2	26-0*
	1,000,000	825	10 - 7	16 - 8	22 - 0	26-0*
	1,100,000	880	10 - 11	17 - 2	22 - 8	26-0*
	1,200,000	932	11 - 3	17 - 8	23 - 4	26-0*
	1,300,000	983	11 - 7	18 - 2	24 - 0	26-0*
	1,400,000	1,033	11 - 10	18 - 8	24 - 7	26-0*
	1,500,000	1,082	12 - 2	19 - 1	25 - 2	26-0*
	1,600,000	1,129	12 - 5	19 - 6	25 - 8	26-0*
	1,700,000	1,176	12 - 8	19 - 11	26-0*	26-0*
	1,800,000	1,221	12 - 11	20 - 3	26-0*	26-0*
	1,900,000	1,266	13 - 2	20 - 8	26-0*	26-0*
	2,000,000	1,310	13 - 4	21 - 0	26-0*	26-0*
	2,100,000	1,354	13 - 7	21 - 4	26-0*	26-0*
	2,200,000	1,396	13 - 9	21 - 8	26-0*	26-0*
	2,300,000	1,438	14 - 0	22 - 0	26-0*	26-0*
	2,400,000	1,480	14 - 2	22 - 4	26-0*	26-0*
16 in.	800,000	783	8 - 11	14 - 1	18 - 6	23 - 8
	900,000	847	9 - 4	14 - 7	19 - 3	24 - 7
	1,000,000	909	9 - 8	15 - 2	19 - 11	25 - 5
	1,100,000	968	9 - 11	15 - 7	20 - 7	26-0*
	1,200,000	1,026	10 - 3	16 - 1	21 - 2	26-0*
	1,300,000	1,082	10 - 6	16 - 6	21 - 9	26-0*
	1,400,000	1,137	10 - 9	16 - 11	22 - 4	26-0*
	1,500,000	1,191	11 - 0	17 - 4	22 - 10	26-0*
	1,600,000	1,243	11 - 3	17 - 8	23 - 4	26-0*
	1,700,000	1,294	11 - 6	18 - 1	23 - 10	26-0*
	1,800,000	1,344	11 - 9	18 - 5	24 - 3	26-0*
	1,900,000	1,394	11 - 11	18 - 9	24 - 8	26-0*
	2,000,000	1,442	12 - 2	19 - 1	25 - 2	26-0*
	2,100,000	1,490	12 - 4	19 - 5	25 - 7	26-0*
	2,200,000	1,537	12 - 6	19 - 8	25 - 11	26-0*
	2,300,000	1,583	12 - 9	20 - 0	26-0*	26-0*
	2,400,000	1,629	12 - 11	20 - 3	26-0*	26-0*
19.2 in.	800,000	832	8 - 5	13 - 3	17 - 5	22 - 3
	900,000	900	8 - 9	13 - 9	18 - 2	23 - 2
	1,000,000	965	9 - 1	14 - 3	18 - 9	24 - 0
	1,100,000	1,029	9 - 4	14 - 8	19 - 5	24 - 9
	1,200,000	1,090	9 - 8	15 - 2	19 - 11	25 - 5
	1,300,000	1,150	9 - 11	15 - 7	20 - 6	26-0*
	1,400,000	1,208	10 - 2	15 - 11	21 - 0	26-0*
	1,500,000	1,265	10 - 4	16 - 4	21 - 6	26-0*
	1,600,000	1,321	10 - 7	16 - 8	22 - 0	26-0*
	1,700,000	1,375	10 - 10	17 - 0	22 - 5	26-0*
	1,800,000	1,429	11 - 0	17 - 4	22 - 10	26-0*
	1,900,000	1,481	11 - 3	17 - 8	23 - 3	26-0*
	2,000,000	1,533	11 - 5	17 - 11	23 - 8	26-0*
	2,100,000	1,583	11 - 7	18 - 3	24 - 0	26-0*
	2,200,000	1,633	11 - 9	18 - 6	24 - 5	26-0*
	2,300,000	1,682	12 - 0	18 - 10	24 - 9	26-0*
	2,400,000	1,731	12 - 2	19 - 1	25 - 2	26-0*
24 in.	800,000	896	7 - 10	12 - 3	16 - 2	20 - 8
	900,000	969	8 - 1	12 - 9	16 - 10	21 - 6
	1,000,000	1,040	8 - 5	13 - 3	17 - 5	22 - 3
	1,100,000	1,108	8 - 8	13 - 8	18 - 0	23 - 0
	1,200,000	1,174	8 - 11	14 - 1	18 - 6	23 - 8
	1,300,000	1,239	9 - 2	14 - 5	19 - 0	24 - 3
	1,400,000	1,302	9 - 5	14 - 9	19 - 6	24 - 10
	1,500,000	1,363	9 - 8	15 - 2	19 - 11	25 - 5
	1,600,000	1,423	9 - 10	15 - 6	20 - 5	26-0*
	1,700,000	1,481	10 - 0	15 - 9	20 - 10	26-0*
	1,800,000	1,539	10 - 3	16 - 1	21 - 2	26-0*
	1,900,000	1,595	10 - 5	16 - 4	21 - 7	26-0*
	2,000,000	1,651	10 - 7	16 - 8	22 - 0	26-0*
	2,100,000	1,706	10 - 9	16 - 11	22 - 4	26-0*
	2,200,000	1,759	10 - 11	17 - 2	22 - 8	26-0*
	2,300,000	1,812	11 - 1	17 - 5	23 - 0	26-0*
	2,400,000	1,864	11 - 3	17 - 8	23 - 4	26-0*

[1] Bracing shall be provided in accordance with 2.3.1.4.

[2] Tabulated spans are calculated based on live load deflection only.

* Spans are limited to 26 feet in length. Check sources for availability of lumber in lengths greater than 20 feet.

Copyright © American Wood Council. Downloaded/printed pursuant to License Agreement. No reproduction or transfer authorized.

Table 2.12A2 Ceiling Joist Spans

LL = 10 psf, L/Δ_{LL} = 360

(Uninhabitable Attics Without Storage) Live Load=10 psf, L/Δ_{LL}=360, Brittle Finish (including plaster and stucco)

			2x4	2x6	2x8	2x10
	L/Δ_{LL}= 360	DL = 5 psf	Maximum Span[1,2]			
Joist Spacing	E (psi)	f_b (psi)	(ft-in.)	(ft-in.)	(ft-in.)	(ft-in.)
12 in.	800,000	543	8 - 7	13 - 6	17 - 10	22 - 9
	900,000	587	8 - 11	14 - 1	18 - 6	23 - 8
	1,000,000	630	9 - 3	14 - 7	19 - 2	24 - 6
	1,100,000	671	9 - 7	15 - 0	19 - 10	25 - 3
	1,200,000	711	9 - 10	15 - 6	20 - 5	26-0*
	1,300,000	750	10 - 1	15 - 11	20 - 11	26-0*
	1,400,000	788	10 - 4	16 - 3	21 - 5	26-0*
	1,500,000	825	10 - 7	16 - 8	22 - 0	26-0*
	1,600,000	862	10 - 10	17 - 0	22 - 5	26-0*
	1,700,000	897	11 - 1	17 - 4	22 - 11	26-0*
	1,800,000	932	11 - 3	17 - 8	23 - 4	26-0*
	1,900,000	966	11 - 6	18 - 0	23 - 9	26-0*
	2,000,000	1,000	11 - 8	18 - 4	24 - 2	26-0*
	2,100,000	1,033	11 - 10	18 - 8	24 - 7	26-0*
	2,200,000	1,066	12 - 1	18 - 11	24 - 11	26-0*
	2,300,000	1,098	12 - 3	19 - 2	25 - 4	26-0*
	2,400,000	1,129	12 - 5	19 - 6	25 - 8	26-0*
16 in.	800,000	598	7 - 10	12 - 3	16 - 2	20 - 8
	900,000	646	8 - 1	12 - 9	16 - 10	21 - 6
	1,000,000	693	8 - 5	13 - 3	17 - 5	22 - 3
	1,100,000	739	8 - 8	13 - 8	18 - 0	23 - 0
	1,200,000	783	8 - 11	14 - 1	18 - 6	23 - 8
	1,300,000	826	9 - 2	14 - 5	19 - 0	24 - 3
	1,400,000	868	9 - 5	14 - 9	19 - 6	24 - 10
	1,500,000	909	9 - 8	15 - 2	19 - 11	25 - 5
	1,600,000	949	9 - 10	15 - 6	20 - 5	26-0*
	1,700,000	988	10 - 0	15 - 9	20 - 10	26-0*
	1,800,000	1,026	10 - 3	16 - 1	21 - 2	26-0*
	1,900,000	1,064	10 - 5	16 - 4	21 - 7	26-0*
	2,000,000	1,101	10 - 7	16 - 8	22 - 0	26-0*
	2,100,000	1,137	10 - 9	16 - 11	22 - 4	26-0*
	2,200,000	1,173	10 - 11	17 - 2	22 - 8	26-0*
	2,300,000	1,208	11 - 1	17 - 5	23 - 0	26-0*
	2,400,000	1,243	11 - 3	17 - 8	23 - 4	26-0*
19.2 in.	800,000	635	7 - 4	11 - 7	15 - 3	19 - 5
	900,000	687	7 - 8	12 - 0	15 - 10	20 - 2
	1,000,000	737	7 - 11	12 - 5	16 - 5	20 - 11
	1,100,000	785	8 - 2	12 - 10	16 - 11	21 - 7
	1,200,000	832	8 - 5	13 - 3	17 - 5	22 - 3
	1,300,000	878	8 - 8	13 - 7	17 - 11	22 - 10
	1,400,000	922	8 - 10	13 - 11	18 - 4	23 - 5
	1,500,000	965	9 - 1	14 - 3	18 - 9	24 - 0
	1,600,000	1,008	9 - 3	14 - 7	19 - 2	24 - 6
	1,700,000	1,050	9 - 5	14 - 10	19 - 7	25 - 0
	1,800,000	1,090	9 - 8	15 - 2	19 - 11	25 - 5
	1,900,000	1,130	9 - 10	15 - 5	20 - 4	25 - 11
	2,000,000	1,170	10 - 0	15 - 8	20 - 8	26-0*
	2,100,000	1,208	10 - 2	15 - 11	21 - 0	26-0*
	2,200,000	1,246	10 - 4	16 - 2	21 - 4	26-0*
	2,300,000	1,284	10 - 5	16 - 5	21 - 8	26-0*
	2,400,000	1,321	10 - 7	16 - 8	22 - 0	26-0*
24 in.	800,000	684	6 - 10	10 - 9	14 - 2	18 - 0
	900,000	740	7 - 1	11 - 2	14 - 8	18 - 9
	1,000,000	794	7 - 4	11 - 7	15 - 3	19 - 5
	1,100,000	846	7 - 7	11 - 11	15 - 9	20 - 1
	1,200,000	896	7 - 10	12 - 3	16 - 2	20 - 8
	1,300,000	945	8 - 0	12 - 7	16 - 7	21 - 2
	1,400,000	993	8 - 3	12 - 11	17 - 0	21 - 9
	1,500,000	1,040	8 - 5	13 - 3	17 - 5	22 - 3
	1,600,000	1,086	8 - 7	13 - 6	17 - 10	22 - 9
	1,700,000	1,131	8 - 9	13 - 9	18 - 2	23 - 2
	1,800,000	1,174	8 - 11	14 - 1	18 - 6	23 - 8
	1,900,000	1,218	9 - 1	14 - 4	18 - 10	24 - 1
	2,000,000	1,260	9 - 3	14 - 7	19 - 2	24 - 6
	2,100,000	1,302	9 - 5	14 - 9	19 - 6	24 - 10
	2,200,000	1,343	9 - 7	15 - 0	19 - 10	25 - 3
	2,300,000	1,383	9 - 8	15 - 3	20 - 1	25 - 8
	2,400,000	1,423	9 - 10	15 - 6	20 - 5	26-0*

[1] Bracing shall be provided in accordance with 2.3.1.4.

[2] Tabulated spans are calculated based on live load deflection only.

* Spans are limited to 26 feet in length. Check sources for availability of lumber in lengths greater than 20 feet.

Copyright © American Wood Council. Downloaded/printed pursuant to License Agreement. No reproduction or transfer authorized.

Table 2.12B1 Ceiling Joist Spans

LL = 20 psf, L/Δ_{LL} = 240

(Uninhabitable Attics With Limited Storage) Live Load=20 psf, L/Δ_{LL}=240, Flexible Finish (including gypsum board)

			2x4	2x6	2x8	2x10
	L/Δ_{LL} = 240	DL = 5 psf	Maximum Span[1,2]			
Joist Spacing	E (psi)	f_b (psi)	(ft-in.)	(ft-in.)	(ft-in.)	(ft-in.)
12 in.	800,000	896	7 - 10	12 - 3	16 - 2	20 - 8
	900,000	969	8 - 1	12 - 9	16 - 10	21 - 6
	1,000,000	1,040	8 - 5	13 - 3	17 - 5	22 - 3
	1,100,000	1,108	8 - 8	13 - 8	18 - 0	23 - 0
	1,200,000	1,174	8 - 11	14 - 1	18 - 6	23 - 8
	1,300,000	1,239	9 - 2	14 - 5	19 - 0	24 - 3
	1,400,000	1,302	9 - 5	14 - 9	19 - 6	24 - 10
	1,500,000	1,363	9 - 8	15 - 2	19 - 11	25 - 5
	1,600,000	1,423	9 - 10	15 - 6	20 - 5	26-0*
	1,700,000	1,481	10 - 0	15 - 9	20 - 10	26-0*
	1,800,000	1,539	10 - 3	16 - 1	21 - 2	26-0*
	1,900,000	1,595	10 - 5	16 - 4	21 - 7	26-0*
	2,000,000	1,651	10 - 7	16 - 8	22 - 0	26-0*
	2,100,000	1,706	10 - 9	16 - 11	22 - 4	26-0*
	2,200,000	1,759	10 - 11	17 - 2	22 - 8	26-0*
	2,300,000	1,812	11 - 1	17 - 5	23 - 0	26-0*
	2,400,000	1,864	11 - 3	17 - 8	23 - 4	26-0*
16 in.	800,000	986	7 - 1	11 - 2	14 - 8	18 - 9
	900,000	1,067	7 - 5	11 - 7	15 - 3	19 - 6
	1,000,000	1,145	7 - 8	12 - 0	15 - 10	20 - 2
	1,100,000	1,220	7 - 11	12 - 5	16 - 4	20 - 10
	1,200,000	1,293	8 - 1	12 - 9	16 - 10	21 - 6
	1,300,000	1,364	8 - 4	13 - 1	17 - 3	22 - 1
	1,400,000	1,433	8 - 7	13 - 5	17 - 9	22 - 7
	1,500,000	1,500	8 - 9	13 - 9	18 - 2	23 - 2
	1,600,000	1,566	8 - 11	14 - 1	18 - 6	23 - 8
	1,700,000	1,631	9 - 1	14 - 4	18 - 11	24 - 1
	1,800,000	1,694	9 - 4	14 - 7	19 - 3	24 - 7
	1,900,000	1,756	9 - 6	14 - 11	19 - 7	25 - 0
	2,000,000	1,817	9 - 8	15 - 2	19 - 11	25 - 5
	2,100,000	1,877	9 - 9	15 - 5	20 - 3	25 - 10
	2,200,000	1,936	9 - 11	15 - 7	20 - 7	26-0*
	2,300,000	1,995	10 - 1	15 - 10	20 - 11	26-0*
	2,400,000	2,052	10 - 3	16 - 1	21 - 2	26-0*
19.2 in.	800,000	1,048	6 - 8	10 - 6	13 - 10	17 - 8
	900,000	1,134	6 - 11	10 - 11	14 - 5	18 - 4
	1,000,000	1,216	7 - 2	11 - 4	14 - 11	19 - 0
	1,100,000	1,296	7 - 5	11 - 8	15 - 5	19 - 7
	1,200,000	1,374	7 - 8	12 - 0	15 - 10	20 - 2
	1,300,000	1,449	7 - 10	12 - 4	16 - 3	20 - 9
	1,400,000	1,522	8 - 1	12 - 8	16 - 8	21 - 3
	1,500,000	1,594	8 - 3	12 - 11	17 - 1	21 - 9
	1,600,000	1,664	8 - 5	13 - 3	17 - 5	22 - 3
	1,700,000	1,733	8 - 7	13 - 6	17 - 9	22 - 8
	1,800,000	1,800	8 - 9	13 - 9	18 - 2	23 - 2
	1,900,000	1,866	8 - 11	14 - 0	18 - 5	23 - 7
	2,000,000	1,931	9 - 1	14 - 3	18 - 9	24 - 0
	2,100,000	1,995	9 - 3	14 - 6	19 - 1	24 - 4
	2,200,000	2,058	9 - 4	14 - 8	19 - 5	24 - 9
	2,300,000	2,120	9 - 6	14 - 11	19 - 8	25 - 1
	2,400,000	2,181	9 - 8	15 - 2	19 - 11	25 - 5
24 in.	800,000	1,129	6 - 2	9 - 9	12 - 10	16 - 5
	900,000	1,221	6 - 5	10 - 2	13 - 4	17 - 0
	1,000,000	1,310	6 - 8	10 - 6	13 - 10	17 - 8
	1,100,000	1,396	6 - 11	10 - 10	14 - 3	18 - 3
	1,200,000	1,480	7 - 1	11 - 2	14 - 8	18 - 9
	1,300,000	1,561	7 - 3	11 - 5	15 - 1	19 - 3
	1,400,000	1,640	7 - 6	11 - 9	15 - 6	19 - 9
	1,500,000	1,717	7 - 8	12 - 0	15 - 10	20 - 2
	1,600,000	1,793	7 - 10	12 - 3	16 - 2	20 - 8
	1,700,000	1,866	8 - 0	12 - 6	16 - 6	21 - 1
	1,800,000	1,939	8 - 1	12 - 9	16 - 10	21 - 6
	1,900,000	2,010	8 - 3	13 - 0	17 - 2	21 - 10
	2,000,000	2,080	8 - 5	13 - 3	17 - 5	22 - 3
	2,100,000	2,149	8 - 7	13 - 5	17 - 9	22 - 7
	2,200,000	2,217	8 - 8	13 - 8	18 - 0	23 - 0
	2,300,000	2,283	8 - 10	13 - 10	18 - 3	23 - 4
	2,400,000	2,349	8 - 11	14 - 1	18 - 6	23 - 8

[1] Bracing shall be provided in accordance with 2.3.1.4.

[2] Tabulated spans are calculated based on live load deflection only.

* Spans are limited to 26 feet in length. Check sources for availability of lumber in lengths greater than 20 feet.

Copyright © American Wood Council. Downloaded/printed pursuant to License Agreement. No reproduction or transfer authorized.

Table 2.12B2 Ceiling Joist Spans

LL = 20 psf, L/Δ_{LL} = 360

(Uninhabitable Attics With Limited Storage) Live Load=20 psf, L/Δ_{LL}=360, Brittle Finish (including plaster and stucco)

			2x4	2x6	2x8	2x10
	L/Δ_{LL} = 360	DL = 5 psf	Maximum Span[1,2]			
Joist Spacing	E (psi)	f_b (psi)	(ft-in.)	(ft-in.)	(ft-in.)	(ft-in.)
12 in.	800,000	684	6 - 10	10 - 9	14 - 2	18 - 0
	900,000	740	7 - 1	11 - 2	14 - 8	18 - 9
	1,000,000	794	7 - 4	11 - 7	15 - 3	19 - 5
	1,100,000	846	7 - 7	11 - 11	15 - 9	20 - 1
	1,200,000	896	7 - 10	12 - 3	16 - 2	20 - 8
	1,300,000	945	8 - 0	12 - 7	16 - 7	21 - 2
	1,400,000	993	8 - 3	12 - 11	17 - 0	21 - 9
	1,500,000	1,040	8 - 5	13 - 3	17 - 5	22 - 3
	1,600,000	1,086	8 - 7	13 - 6	17 - 10	22 - 9
	1,700,000	1,131	8 - 9	13 - 9	18 - 2	23 - 2
	1,800,000	1,174	8 - 11	14 - 1	18 - 6	23 - 8
	1,900,000	1,218	9 - 1	14 - 4	18 - 10	24 - 1
	2,000,000	1,260	9 - 3	14 - 7	19 - 2	24 - 6
	2,100,000	1,302	9 - 5	14 - 9	19 - 6	24 - 10
	2,200,000	1,343	9 - 7	15 - 0	19 - 10	25 - 3
	2,300,000	1,383	9 - 8	15 - 3	20 - 1	25 - 8
	2,400,000	1,423	9 - 10	15 - 6	20 - 5	26-0*
16 in.	800,000	753	6 - 2	9 - 9	12 - 10	16 - 5
	900,000	814	6 - 5	10 - 2	13 - 4	17 - 0
	1,000,000	874	6 - 8	10 - 6	13 - 10	17 - 8
	1,100,000	931	6 - 11	10 - 10	14 - 3	18 - 3
	1,200,000	986	7 - 1	11 - 2	14 - 8	18 - 9
	1,300,000	1,041	7 - 3	11 - 5	15 - 1	19 - 3
	1,400,000	1,093	7 - 6	11 - 9	15 - 6	19 - 9
	1,500,000	1,145	7 - 8	12 - 0	15 - 10	20 - 2
	1,600,000	1,195	7 - 10	12 - 3	16 - 2	20 - 8
	1,700,000	1,244	8 - 0	12 - 6	16 - 6	21 - 1
	1,800,000	1,293	8 - 1	12 - 9	16 - 10	21 - 6
	1,900,000	1,340	8 - 3	13 - 0	17 - 2	21 - 10
	2,000,000	1,387	8 - 5	13 - 3	17 - 5	22 - 3
	2,100,000	1,433	8 - 7	13 - 5	17 - 9	22 - 7
	2,200,000	1,478	8 - 8	13 - 8	18 - 0	23 - 0
	2,300,000	1,522	8 - 10	13 - 10	18 - 3	23 - 4
	2,400,000	1,566	8 - 11	14 - 1	18 - 6	23 - 8
19.2 in.	800,000	800	5 - 10	9 - 2	12 - 1	15 - 5
	900,000	865	6 - 1	9 - 6	12 - 7	16 - 0
	1,000,000	928	6 - 3	9 - 10	13 - 0	16 - 7
	1,100,000	989	6 - 6	10 - 2	13 - 5	17 - 2
	1,200,000	1,048	6 - 8	10 - 6	13 - 10	17 - 8
	1,300,000	1,106	6 - 10	10 - 9	14 - 2	18 - 1
	1,400,000	1,162	7 - 0	11 - 1	14 - 7	18 - 7
	1,500,000	1,216	7 - 2	11 - 4	14 - 11	19 - 0
	1,600,000	1,270	7 - 4	11 - 7	15 - 3	19 - 5
	1,700,000	1,322	7 - 6	11 - 9	15 - 6	19 - 10
	1,800,000	1,374	7 - 8	12 - 0	15 - 10	20 - 2
	1,900,000	1,424	7 - 9	12 - 3	16 - 1	20 - 7
	2,000,000	1,474	7 - 11	12 - 5	16 - 5	20 - 11
	2,100,000	1,522	8 - 1	12 - 8	16 - 8	21 - 3
	2,200,000	1,570	8 - 2	12 - 10	16 - 11	21 - 7
	2,300,000	1,618	8 - 4	13 - 0	17 - 2	21 - 11
	2,400,000	1,664	8 - 5	13 - 3	17 - 5	22 - 3
24 in.	800,000	862	5 - 5	8 - 6	11 - 3	14 - 4
	900,000	932	5 - 8	8 - 10	11 - 8	14 - 11
	1,000,000	1,000	5 - 10	9 - 2	12 - 1	15 - 5
	1,100,000	1,066	6 - 0	9 - 6	12 - 6	15 - 11
	1,200,000	1,129	6 - 2	9 - 9	12 - 10	16 - 5
	1,300,000	1,191	6 - 4	10 - 0	13 - 2	16 - 10
	1,400,000	1,251	6 - 6	10 - 3	13 - 6	17 - 3
	1,500,000	1,310	6 - 8	10 - 6	13 - 10	17 - 8
	1,600,000	1,368	6 - 10	10 - 9	14 - 2	18 - 0
	1,700,000	1,424	7 - 0	10 - 11	14 - 5	18 - 5
	1,800,000	1,480	7 - 1	11 - 2	14 - 8	18 - 9
	1,900,000	1,534	7 - 3	11 - 4	15 - 0	19 - 1
	2,000,000	1,587	7 - 4	11 - 7	15 - 3	19 - 5
	2,100,000	1,640	7 - 6	11 - 9	15 - 6	19 - 9
	2,200,000	1,692	7 - 7	11 - 11	15 - 9	20 - 1
	2,300,000	1,742	7 - 8	12 - 1	16 - 0	20 - 4
	2,400,000	1,793	7 - 10	12 - 3	16 - 2	20 - 8

[1] Bracing shall be provided in accordance with 2.3.1.4.

[2] Tabulated spans are calculated based on live load deflection only.

* Spans are limited to 26 feet in length. Check sources for availability of lumber in lengths greater than 20 feet.

Copyright © American Wood Council. Downloaded/printed pursuant to License Agreement. No reproduction or transfer authorized.

Table 2.13A1 Ceiling Joist Framing Capacity Requirements

LL = 10 psf
L/Δ_{LL} = 240

(Uninhabitable Attics Without Storage)

Live Load=10 psf, L/Δ_{LL}=240, Flexible Finish (including gypsum board)

		Ceiling Live Load = 10 psf		
		L/Δ_{LL} = 240	Dead Load = 5 psf	
		Required Joist Capacities		
Framing Spacing	Maximum Span (ft)	Apparent Rigidity[1,2,5] (in.^{2} - lbs)	Moment (ft - lbs)	Bearing[3,4] (lbs)
12 in.	10	4,500,000	190	80
	11	6,000,000	230	80
	12	7,800,000	270	90
	13	9,900,000	320	100
	14	12,300,000	370	110
	15	15,200,000	420	110
	16	18,400,000	480	120
	17	22,100,000	540	130
	18	26,200,000	610	140
	19	30,900,000	680	140
	20	36,000,000	750	150
16 in.	10	6,000,000	250	100
	11	8,000,000	300	110
	12	10,400,000	360	120
	13	13,200,000	420	130
	14	16,500,000	490	140
	15	20,300,000	560	150
	16	24,600,000	640	160
	17	29,500,000	720	170
	18	35,000,000	810	180
	19	41,200,000	900	190
	20	48,000,000	1,000	200
19.2 in.	10	7,200,000	300	120
	11	9,600,000	360	130
	12	12,400,000	430	140
	13	15,800,000	510	160
	14	19,800,000	590	170
	15	24,300,000	680	180
	16	29,500,000	770	190
	17	35,400,000	870	200
	18	42,000,000	970	220
	19	49,400,000	1,080	230
	20	57,600,000	1,200	240
24 in.	10	9,000,000	380	150
	11	12,000,000	450	170
	12	15,600,000	540	180
	13	19,800,000	630	200
	14	24,700,000	740	210
	15	30,400,000	840	230
	16	36,900,000	960	240
	17	44,200,000	1,080	260
	18	52,500,000	1,220	270
	19	61,700,000	1,350	290
	20	72,000,000	1,500	300

See footnotes 1-5.

Copyright © American Wood Council. Downloaded/printed pursuant to License Agreement. No reproduction or transfer authorized.
AMERICAN WOOD COUNCIL

Table 2.13A2 Ceiling Joist Framing Capacity Requirements

LL = 10 psf
L/Δ_{LL} = 360

(Uninhabitable Attics Without Storage)

Live Load=10 psf, L/Δ_{LL}=360, Brittle Finish (including plaster and stucco)

		Ceiling Live Load = 10 psf		
		L/Δ_{LL} = 360	Dead Load = 5 psf	
		Required Joist Capacities		
Framing Spacing	Maximum Span (ft)	Apparent Rigidity[1,2,5] (in.^{2} - lbs)	Moment (ft - lbs)	Bearing[3,4] (lbs)
12 in.	10	6,800,000	190	80
	11	9,000,000	230	80
	12	11,700,000	270	90
	13	14,800,000	320	100
	14	18,500,000	370	110
	15	22,800,000	420	110
	16	27,600,000	480	120
	17	33,200,000	540	130
	18	39,400,000	610	140
	19	46,300,000	680	140
	20	54,000,000	750	150
16 in.	10	9,000,000	250	100
	11	12,000,000	300	110
	12	15,600,000	360	120
	13	19,800,000	420	130
	14	24,700,000	490	140
	15	30,400,000	560	150
	16	36,900,000	640	160
	17	44,200,000	720	170
	18	52,500,000	810	180
	19	61,700,000	900	190
	20	72,000,000	1,000	200
19.2 in.	10	10,800,000	300	120
	11	14,400,000	360	130
	12	18,700,000	430	140
	13	23,700,000	510	160
	14	29,600,000	590	170
	15	36,500,000	680	180
	16	44,200,000	770	190
	17	53,100,000	870	200
	18	63,000,000	970	220
	19	74,100,000	1,080	230
	20	86,400,000	1,200	240
24 in.	10	13,500,000	380	150
	11	18,000,000	450	170
	12	23,300,000	540	180
	13	29,700,000	630	200
	14	37,000,000	740	210
	15	45,600,000	840	230
	16	55,300,000	960	240
	17	66,300,000	1,080	260
	18	78,700,000	1,220	270
	19	92,600,000	1,350	290
	20	108,000,000	1,500	300

See footnotes 1-5.

Copyright © American Wood Council. Downloaded/printed pursuant to License Agreement. No reproduction or transfer authorized.
AMERICAN WOOD COUNCIL

Table 2.13B1 Ceiling Joist Framing Capacity Requirements

LL = 20 psf
L/Δ_{LL} = 240

(Uninhabitable Attics With Limited Storage)

Live Load=20 psf, L/Δ_{LL}=240, Flexible Finish (including gypsum board)

		Ceiling Live Load = 20 psf		
		L/Δ_{LL} = 240	Dead Load = 10 psf	
		Required Joist Capacities		
Framing Spacing	Maximum Span (ft)	Apparent Rigidity[1,2,5] (in.^{2} - lbs)	Moment (ft - lbs)	Bearing[3,4] (lbs)
12 in.	10	9,000,000	380	150
	11	12,000,000	450	170
	12	15,600,000	540	180
	13	19,800,000	630	200
	14	24,700,000	740	210
	15	30,400,000	840	230
	16	36,900,000	960	240
	17	44,200,000	1,080	260
	18	52,500,000	1,220	270
	19	61,700,000	1,350	290
	20	72,000,000	1,500	300
16 in.	10	12,000,000	500	200
	11	16,000,000	610	220
	12	20,700,000	720	240
	13	26,400,000	850	260
	14	32,900,000	980	280
	15	40,500,000	1,130	300
	16	49,200,000	1,280	320
	17	59,000,000	1,450	340
	18	70,000,000	1,620	360
	19	82,300,000	1,810	380
	20	96,000,000	2,000	400
19.2 in.	10	14,400,000	600	240
	11	19,200,000	730	260
	12	24,900,000	860	290
	13	31,600,000	1,010	310
	14	39,500,000	1,180	340
	15	48,600,000	1,350	360
	16	59,000,000	1,540	380
	17	70,700,000	1,730	410
	18	84,000,000	1,940	430
	19	98,800,000	2,170	460
	20	115,200,000	2,400	480
24 in.	10	18,000,000	750	300
	11	24,000,000	910	330
	12	31,100,000	1,080	360
	13	39,500,000	1,270	390
	14	49,400,000	1,470	420
	15	60,800,000	1,690	450
	16	73,700,000	1,920	480
	17	88,400,000	2,170	510
	18	105,000,000	2,430	540
	19	123,500,000	2,710	570
	20	144,000,000	3,000	600

See footnotes 1-5.

Copyright © American Wood Council. Downloaded/printed pursuant to License Agreement. No reproduction or transfer authorized.
AMERICAN WOOD COUNCIL

Table 2.13B2 Ceiling Joist Framing Capacity Requirements

LL = 20 psf
L/Δ_{LL} = 360

(Uninhabitable Attics With Limited Storage)

Live Load=20 psf, L/Δ_{LL}=360, Brittle Finish (including plaster and stucco)

		Ceiling Live Load = 20 psf		
		L/Δ_{LL} = 360	Dead Load = 10 psf	
		Required Joist Capacities		
Framing Spacing	Maximum Span (ft)	Apparent Rigidity[1,2,5] (in.^{2} - lbs)	Moment (ft - lbs)	Bearing[3,4] (lbs)
12 in.	10	13,500,000	380	150
	11	18,000,000	450	170
	12	23,300,000	540	180
	13	29,700,000	630	200
	14	37,000,000	740	210
	15	45,600,000	840	230
	16	55,300,000	960	240
	17	66,300,000	1,080	260
	18	78,700,000	1,220	270
	19	92,600,000	1,350	290
	20	108,000,000	1,500	300
16 in.	10	18,000,000	500	200
	11	24,000,000	610	220
	12	31,100,000	720	240
	13	39,500,000	850	260
	14	49,400,000	980	280
	15	60,800,000	1,130	300
	16	73,700,000	1,280	320
	17	88,400,000	1,450	340
	18	105,000,000	1,620	360
	19	123,500,000	1,810	380
	20	144,000,000	2,000	400
19.2 in.	10	21,600,000	600	240
	11	28,700,000	730	260
	12	37,300,000	860	290
	13	47,500,000	1,010	310
	14	59,300,000	1,180	340
	15	72,900,000	1,350	360
	16	88,500,000	1,540	380
	17	106,100,000	1,730	410
	18	126,000,000	1,940	430
	19	148,200,000	2,170	460
	20	172,800,000	2,400	480
24 in.	10	27,000,000	750	300
	11	35,900,000	910	330
	12	46,700,000	1,080	360
	13	59,300,000	1,270	390
	14	74,100,000	1,470	420
	15	91,100,000	1,690	450
	16	110,600,000	1,920	480
	17	132,700,000	2,170	510
	18	157,500,000	2,430	540
	19	185,200,000	2,710	570
	20	216,000,000	3,000	600

See footnotes 1-5.

Copyright © American Wood Council. Downloaded/printed pursuant to License Agreement. No reproduction or transfer authorized.
AMERICAN WOOD COUNCIL

Footnotes to Tables 2.13A-B

[1] Apparent rigidity capacities shall include the effects of both bending and shear deflections. Apparent rigidity capacities have been adjusted for solid-sawn lumber to account for these effects. Contact the I-joist manufacturer for apparent rigidity capacities to be used for I-joists in this table.

[2] Tabulated apparent rigidity requirements assume single span conditions. For continuous span conditions, tabulated apparent rigidity requirements shall be permitted to be multiplied by 0.75.

[3] Tabulated bearing capacity requirements are intended for single span applications. For bearing capacity requirements for interior bearing points of continuous span applications, the tabulated bearing capacities shall be multiplied by 2.5.

[4] Tabulated bearing capacity requirements are applicable when determining shear capacity requirements for single span applications. For shear capacity requirements of continuous span applications, the tabulated bearing capacities shall be multiplied by 1.25.

[5] Tabulated apparent rigidity requirements are calculated based on live load deflection only.

Copyright © American Wood Council. Downloaded/printed pursuant to License Agreement. No reproduction or transfer authorized.
AMERICAN WOOD COUNCIL

Table 2.14A Rafter Spans for 20 psf Live Load

						2x4	2x6	2x8	2x10	2x12
			$L/\Delta_{LL} = 180$	$L/\Delta_{LL} = 240$	$L/\Delta_{LL} = 360$					
				Attached Ceiling						
	DL = 10 psf	DL = 20 psf	No Attached Ceiling	Flexible Finish (including gypsum board)	Brittle Finish (including plaster and stucco)	Maximum Span[1,2]				
Rafter Spacing	f_b (psi)	f_b (psi)	E^3 (psi)	E^3 (psi)	E^3 (psi)	(ft-in.)	(ft-in.)	(ft-in.)	(ft-in.)	(ft-in.)
12 in.	200	267	63,246	84,327	126,491	3 - 8	5 - 10	7 - 8	9 - 9	11 - 10
	400	533	178,885	238,514	357,771	5 - 3	8 - 2	10 - 10	13 - 9	16 - 9
	600	800	328,634	438,178	657,267	6 - 5	10 - 0	13 - 3	16 - 11	20 - 6
	800	1,067	505,964	674,619	1,011,929	7 - 5	11 - 7	15 - 3	19 - 6	23 - 9
	1,000	1,333	707,107	942,809	1,414,214	8 - 3	13 - 0	17 - 1	21 - 10	26-0*
	1,200	1,600	929,516	1,239,355	1,859,032	9 - 0	14 - 2	18 - 9	23 - 11	26-0*
	1,400	1,867	1,171,324	1,561,765	2,342,648	9 - 9	15 - 4	20 - 3	25 - 10	26-0*
	1,600	2,133	1,431,084	1,908,111	2,862,167	10 - 5	16 - 5	21 - 7	26-0*	26-0*
	1,800	2,400	1,707,630	2,276,840	3,415,260	11 - 1	17 - 5	22 - 11	26-0*	26-0*
	2,000	2,667	2,000,000	2,666,667	4,000,000	11 - 8	18 - 4	24 - 2	26-0*	26-0*
	2,200	2,933	2,307,379	3,076,506	4,614,759	12 - 3	19 - 3	25 - 4	26-0*	26-0*
	2,400	3,200	2,629,068	3,505,424	5,258,137	12 - 9	20 - 1	26-0*	26-0*	26-0*
	2,600	3,467	2,964,456	3,952,608	5,928,912	13 - 4	20 - 11	26-0*	26-0*	26-0*
	2,800	3,733	3,313,005	4,417,340	6,626,009	13 - 10	21 - 8	26-0*	26-0*	26-0*
	3,000	4,000	3,674,235	4,898,979	7,348,469	14 - 3	22 - 5	26-0*	26-0*	26-0*
16 in.	200	267	54,772	73,030	109,545	3 - 2	5 - 0	6 - 7	8 - 5	10 - 3
	400	533	154,919	206,559	309,839	4 - 6	7 - 1	9 - 4	11 - 11	14 - 6
	600	800	284,605	379,473	569,210	5 - 6	8 - 8	11 - 6	14 - 8	17 - 9
	800	1,067	438,178	584,237	876,356	6 - 5	10 - 0	13 - 3	16 - 11	20 - 6
	1,000	1,333	612,372	816,497	1,224,745	7 - 2	11 - 3	14 - 10	18 - 11	23 - 0
	1,200	1,600	804,984	1,073,313	1,609,969	7 - 10	12 - 4	16 - 3	20 - 8	25 - 2
	1,400	1,867	1,014,396	1,352,528	2,028,793	8 - 5	13 - 3	17 - 6	22 - 4	26-0*
	1,600	2,133	1,239,355	1,652,473	2,478,709	9 - 0	14 - 2	18 - 9	23 - 11	26-0*
	1,800	2,400	1,478,851	1,971,801	2,957,702	9 - 7	15 - 1	19 - 10	25 - 4	26-0*
	2,000	2,667	1,732,051	2,309,401	3,464,102	10 - 1	15 - 11	20 - 11	26-0*	26-0*
	2,200	2,933	1,998,249	2,664,332	3,996,498	10 - 7	16 - 8	22 - 0	26-0*	26-0*
	2,400	3,200	2,276,840	3,035,787	4,553,680	11 - 1	17 - 5	22 - 11	26-0*	26-0*
	2,600	3,467	2,567,294	3,423,059	5,134,589	11 - 6	18 - 1	23 - 10	26-0*	26-0*
	2,800	3,733	2,869,146	3,825,528	5,738,292	12 - 0	18 - 9	24 - 9	26-0*	26-0*
	3,000	4,000	3,181,981	4,242,641	6,363,961	12 - 4	19 - 5	25 - 8	26-0*	26-0*
19.2 in.	200	267	50,000	66,667	100,000	2 - 11	4 - 7	6 - 1	7 - 9	9 - 5
	400	533	141,421	188,562	282,843	4 - 1	6 - 6	8 - 7	10 - 11	13 - 3
	600	800	259,808	346,410	519,615	5 - 1	7 - 11	10 - 6	13 - 4	16 - 3
	800	1,067	400,000	533,333	800,000	5 - 10	9 - 2	12 - 1	15 - 5	18 - 9
	1,000	1,333	559,017	745,356	1,118,034	6 - 6	10 - 3	13 - 6	17 - 3	21 - 0
	1,200	1,600	734,847	979,796	1,469,694	7 - 2	11 - 3	14 - 10	18 - 11	23 - 0
	1,400	1,867	926,013	1,234,684	1,852,026	7 - 9	12 - 2	16 - 0	20 - 5	24 - 10
	1,600	2,133	1,131,371	1,508,494	2,262,742	8 - 3	13 - 0	17 - 1	21 - 10	26-0*
	1,800	2,400	1,350,000	1,800,000	2,700,000	8 - 9	13 - 9	18 - 2	23 - 2	26-0*
	2,000	2,667	1,581,139	2,108,185	3,162,278	9 - 3	14 - 6	19 - 1	24 - 5	26-0*
	2,200	2,933	1,824,144	2,432,192	3,648,287	9 - 8	15 - 2	20 - 0	25 - 7	26-0*
	2,400	3,200	2,078,461	2,771,281	4,156,922	10 - 1	15 - 11	20 - 11	26-0*	26-0*
	2,600	3,467	2,343,608	3,124,811	4,687,217	10 - 6	16 - 6	21 - 9	26-0*	26-0*
	2,800	3,733	2,619,160	3,492,214	5,238,320	10 - 11	17 - 2	22 - 7	26-0*	26-0*
	3,000	4,000	2,904,738	3,872,983	5,809,475	11 - 4	17 - 9	23 - 5	26-0*	26-0*
24 in.	200	267	44,721	59,628	89,443	2 - 7	4 - 1	5 - 5	6 - 11	8 - 5
	400	533	126,491	168,655	252,982	3 - 8	5 - 10	7 - 8	9 - 9	11 - 10
	600	800	232,379	309,839	464,758	4 - 6	7 - 1	9 - 4	11 - 11	14 - 6
	800	1,067	357,771	477,028	715,542	5 - 3	8 - 2	10 - 10	13 - 9	16 - 9
	1,000	1,333	500,000	666,667	1,000,000	5 - 10	9 - 2	12 - 1	15 - 5	18 - 9
	1,200	1,600	657,267	876,356	1,314,534	6 - 5	10 - 0	13 - 3	16 - 11	20 - 6
	1,400	1,867	828,251	1,104,335	1,656,502	6 - 11	10 - 10	14 - 4	18 - 3	22 - 2
	1,600	2,133	1,011,929	1,349,238	2,023,858	7 - 5	11 - 7	15 - 3	19 - 6	23 - 9
	1,800	2,400	1,207,477	1,609,969	2,414,953	7 - 10	12 - 4	16 - 3	20 - 8	25 - 2
	2,000	2,667	1,414,214	1,885,618	2,828,427	8 - 3	13 - 0	17 - 1	21 - 10	26-0*
	2,200	2,933	1,631,564	2,175,418	3,263,127	8 - 8	13 - 7	17 - 11	22 - 10	26-0*
	2,400	3,200	1,859,032	2,478,709	3,718,064	9 - 0	14 - 2	18 - 9	23 - 11	26-0*
	2,600	3,467	2,096,187	2,794,916	4,192,374	9 - 5	14 - 9	19 - 6	24 - 10	26-0*
	2,800	3,733	2,342,648	3,123,531	4,685,296	9 - 9	15 - 4	20 - 3	25 - 10	26-0*
	3,000	4,000	2,598,076	3,464,102	5,196,152	10 - 1	15 - 11	20 - 11	26-0*	26-0*

* Spans (horizontal projection) are limited to 26 feet in length. Check sources for availability of lumber in lengths greater than 20 feet.
See footnotes 1-3.

Copyright © American Wood Council. Downloaded/printed pursuant to License Agreement. No reproduction or transfer authorized.

Footnotes to Table 2.14A

1 Tabulated rafter spans assume ceiling joists or rafter ties are located at the bottom of the attic space to resist thrust. When ceiling joists or rafter ties are located higher in the attic space and are used to resist thrust, the rafter spans shall be reduced using the factors given in the following table:

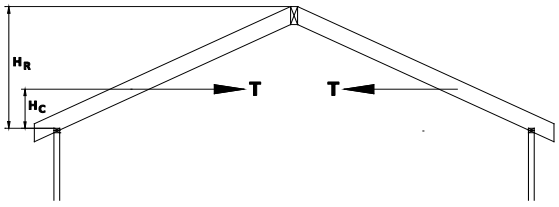

Ceiling Height/Top Plate-to-Roof Ridge Height (H_C / H_R)	Rafter Span Adjustment Factors
1/2	0.58
1/3	0.67
1/4	0.76
1/5	0.83
1/6	0.90
1/7.5 and less	1.00

Note: Lateral deflection of the rafter below the rafter ties may exceed 3/4 inch when rafter ties are located above one-third of the top plate-to- roof ridge height, H_R, or when H_c is greater than 2 feet and may require additional consideration.

2 Tabulated rafter spans (horizontal projection) in Table 2.14A shall be permitted to be multiplied by the sloped roof adjustment factors in the following table for roof pitches greater than 4:12:

	10 psf Dead	20 psf Dead
Roof Pitch	**Adjustment Factor For Sloped Roofs**	
5:12	1.02	1.01
6:12	1.04	1.03
7:12	1.05	1.04
8:12	1.07	1.05
9:12	1.10	1.07
10:12	1.12	1.08
11:12	1.14	1.10
12:12	1.17	1.12

3 Tabulated modulus of elasticity requirements, E, are calculated based on live load deflection only.

Copyright © American Wood Council. Downloaded/printed pursuant to License Agreement. No reproduction or transfer authorized.
AMERICAN WOOD COUNCIL

Table 2.14B Rafter Spans for 30 psf Ground Snow Load

						2x4	2x6	2x8	2x10	2x12
			$L/\Delta_{LL} = 180$	$L/\Delta_{LL} = 240$	$L/\Delta_{LL} = 360$					
				Attached Ceiling						
	DL = 10 psf	DL = 20 psf	No Attached Ceiling	Flexible Finish (including gypsum board)	Brittle Finish (including plaster and stucco)	Maximum Span[1]				
Rafter Spacing	f_b (psi)	f_b (psi)	E^2 (psi)	E^2 (psi)	E^2 (psi)	(ft-in.)	(ft-in.)	(ft-in.)	(ft-in.)	(ft-in.)
12 in.	200	250	60,000	80,000	120,000	3 - 2	5 - 0	6 - 7	8 - 5	10 - 3
	400	500	170,000	230,000	350,000	4 - 6	7 - 1	9 - 4	11 - 11	14 - 6
	600	750	320,000	430,000	640,000	5 - 6	8 - 8	11 - 6	14 - 8	17 - 9
	800	1,000	490,000	660,000	990,000	6 - 5	10 - 0	13 - 3	16 - 11	20 - 0†
	1,000	1,250	690,000	920,000	1,380,000	7 - 2	11 - 3	14 - 10	18 - 11	20 - 0†
	1,200	1,500	910,000	1,210,000	1,810,000	7 - 10	12 - 4	16 - 3	20 - 0†	20 - 0†
	1,400	1,750	1,140,000	1,520,000	2,280,000	8 - 5	13 - 3	17 - 6	20 - 0†	20 - 0†
	1,600	2,000	1,390,000	1,860,000	2,790,000	9 - 0	14 - 2	18 - 9	20 - 0†	20 - 0†
	1,800	2,250	1,660,000	2,220,000	3,330,000	9 - 7	15 - 1	19 - 10	20 - 0†	20 - 0†
	2,000	2,500	1,950,000	2,600,000	3,900,000	10 - 1	15 - 11	20 - 0†	20 - 0†	20 - 0†
	2,200	2,750	2,250,000	3,000,000	4,500,000	10 - 7	16 - 8	20 - 0†	20 - 0†	20 - 0†
	2,400	3,000	2,560,000	3,420,000	5,120,000	11 - 1	17 - 5	20 - 0†	20 - 0†	20 - 0†
	2,600	3,250	2,890,000	3,850,000	5,780,000	11 - 6	18 - 1	20 - 0†	20 - 0†	20 - 0†
	2,800	3,500	3,230,000	4,300,000	6,460,000	12 - 0	18 - 9	20 - 0†	20 - 0†	20 - 0†
	3,000	3,750	3,580,000	4,770,000	7,160,000	12 - 4	19 - 5	20 - 0†	20 - 0†	20 - 0†
16 in.	200	250	50,000	70,000	110,000	2 - 9	4 - 4	5 - 9	7 - 4	8 - 11
	400	500	150,000	200,000	300,000	3 - 11	6 - 2	8 - 1	10 - 4	12 - 7
	600	750	280,000	370,000	550,000	4 - 10	7 - 6	9 - 11	12 - 8	15 - 5
	800	1,000	430,000	570,000	850,000	5 - 6	8 - 8	11 - 6	14 - 8	17 - 9
	1,000	1,250	600,000	800,000	1,190,000	6 - 2	9 - 9	12 - 10	16 - 4	19 - 11
	1,200	1,500	780,000	1,050,000	1,570,000	6 - 9	10 - 8	14 - 0	17 - 11	20 - 0†
	1,400	1,750	990,000	1,320,000	1,980,000	7 - 4	11 - 6	15 - 2	19 - 4	20 - 0†
	1,600	2,000	1,210,000	1,610,000	2,410,000	7 - 10	12 - 4	16 - 3	20 - 0†	20 - 0†
	1,800	2,250	1,440,000	1,920,000	2,880,000	8 - 4	13 - 1	17 - 2	20 - 0†	20 - 0†
	2,000	2,500	1,690,000	2,250,000	3,380,000	8 - 9	13 - 9	18 - 2	20 - 0†	20 - 0†
	2,200	2,750	1,950,000	2,600,000	3,890,000	9 - 2	14 - 5	19 - 0	20 - 0†	20 - 0†
	2,400	3,000	2,220,000	2,960,000	4,440,000	9 - 7	15 - 1	19 - 10	20 - 0†	20 - 0†
	2,600	3,250	2,500,000	3,340,000	5,000,000	10 - 0	15 - 8	20 - 0†	20 - 0†	20 - 0†
	2,800	3,500	2,800,000	3,730,000	5,590,000	10 - 4	16 - 3	20 - 0†	20 - 0†	20 - 0†
	3,000	3,750	3,100,000	4,130,000	6,200,000	10 - 9	16 - 10	20 - 0†	20 - 0†	20 - 0†
19.2 in.	200	250	50,000	60,000	100,000	2 - 6	4 - 0	5 - 3	6 - 8	8 - 1
	400	500	140,000	180,000	280,000	3 - 7	5 - 7	7 - 5	9 - 5	11 - 6
	600	750	250,000	340,000	510,000	4 - 5	6 - 11	9 - 1	11 - 7	14 - 1
	800	1,000	390,000	520,000	780,000	5 - 1	7 - 11	10 - 6	13 - 4	16 - 3
	1,000	1,250	540,000	730,000	1,090,000	5 - 8	8 - 11	11 - 8	14 - 11	18 - 2
	1,200	1,500	720,000	950,000	1,430,000	6 - 2	9 - 9	12 - 10	16 - 4	19 - 11
	1,400	1,750	900,000	1,200,000	1,800,000	6 - 8	10 - 6	13 - 10	17 - 8	20 - 0†
	1,600	2,000	1,100,000	1,470,000	2,200,000	7 - 2	11 - 3	14 - 10	18 - 11	20 - 0†
	1,800	2,250	1,320,000	1,750,000	2,630,000	7 - 7	11 - 11	15 - 8	20 - 0†	20 - 0†
	2,000	2,500	1,540,000	2,050,000	3,080,000	8 - 0	12 - 7	16 - 7	20 - 0†	20 - 0†
	2,200	2,750	1,780,000	2,370,000	3,550,000	8 - 5	13 - 2	17 - 4	20 - 0†	20 - 0†
	2,400	3,000	2,030,000	2,700,000	4,050,000	8 - 9	13 - 9	18 - 2	20 - 0†	20 - 0†
	2,600	3,250	2,280,000	3,040,000	4,570,000	9 - 1	14 - 4	18 - 10	20 - 0†	20 - 0†
	2,800	3,500	2,550,000	3,400,000	5,100,000	9 - 5	14 - 10	19 - 7	20 - 0†	20 - 0†
	3,000	3,750	2,830,000	3,770,000	5,660,000	9 - 9	15 - 4	20 - 0†	20 - 0†	20 - 0†
24 in.	200	250	40,000	60,000	90,000	2 - 3	3 - 7	4 - 8	6 - 0	7 - 3
	400	500	120,000	160,000	250,000	3 - 2	5 - 0	6 - 7	8 - 5	10 - 3
	600	750	230,000	300,000	450,000	3 - 11	6 - 2	8 - 1	10 - 4	12 - 7
	800	1,000	350,000	460,000	700,000	4 - 6	7 - 1	9 - 4	11 - 11	14 - 6
	1,000	1,250	490,000	650,000	970,000	5 - 1	7 - 11	10 - 6	13 - 4	16 - 3
	1,200	1,500	640,000	850,000	1,280,000	5 - 6	8 - 8	11 - 6	14 - 8	17 - 9
	1,400	1,750	810,000	1,080,000	1,610,000	6 - 0	9 - 5	12 - 5	15 - 10	19 - 3
	1,600	2,000	990,000	1,310,000	1,970,000	6 - 5	10 - 0	13 - 3	16 - 11	20 - 0†
	1,800	2,250	1,180,000	1,570,000	2,350,000	6 - 9	10 - 8	14 - 0	17 - 11	20 - 0†
	2,000	2,500	1,380,000	1,840,000	2,760,000	7 - 2	11 - 3	14 - 10	18 - 11	20 - 0†
	2,200	2,750	1,590,000	2,120,000	3,180,000	7 - 6	11 - 9	15 - 6	19 - 10	20 - 0†
	2,400	3,000	1,810,000	2,410,000	3,620,000	7 - 10	12 - 4	16 - 3	20 - 0†	20 - 0†
	2,600	3,250	2,040,000	2,720,000	4,080,000	8 - 2	12 - 10	16 - 10	20 - 0†	20 - 0†
	2,800	3,500	2,280,000	3,040,000	4,560,000	8 - 5	13 - 3	17 - 6	20 - 0†	20 - 0†
	3,000	3,750	2,530,000	3,380,000	5,060,000	8 - 9	13 - 9	18 - 2	20 - 0†	20 - 0†

† Spans (horizontal projection) are limited to 20 feet in length.

See footnotes 1-2.

Copyright © American Wood Council. Downloaded/printed pursuant to License Agreement. No reproduction or transfer authorized.

Table 2.14C Rafter Spans for 50 psf Ground Snow Load

						2x4	2x6	2x8	2x10	2x12
			$L/\Delta_{LL} = 180$	$L/\Delta_{LL} = 240$	$L/\Delta_{LL} = 360$					
				Attached Ceiling						
	DL = 10 psf	DL = 20 psf	No Attached Ceiling	Flexible Finish (including gypsum board)	Brittle Finish (including plaster and stucco)	Maximum Span[1]				
Rafter Spacing	f_b (psi)	f_b (psi)	E^2 (psi)	E^2 (psi)	E^2 (psi)	(ft-in.)	(ft-in.)	(ft-in.)	(ft-in.)	(ft-in.)
12 in.	200	230	60,000	70,000	110,000	2 - 7	4 - 1	5 - 5	6 - 11	8 - 5
	400	470	160,000	210,000	320,000	3 - 8	5 - 10	7 - 8	9 - 9	11 - 10
	600	700	290,000	390,000	580,000	4 - 6	7 - 1	9 - 4	11 - 11	14 - 6
	800	930	450,000	600,000	890,000	5 - 3	8 - 2	10 - 10	13 - 9	16 - 9
	1,000	1,170	630,000	830,000	1,250,000	5 - 10	9 - 2	12 - 1	15 - 5	18 - 9
	1,200	1,400	820,000	1,100,000	1,640,000	6 - 5	10 - 0	13 - 3	16 - 11	20 - 0†
	1,400	1,630	1,040,000	1,380,000	2,070,000	6 - 11	10 - 10	14 - 4	18 - 3	20 - 0†
	1,600	1,870	1,260,000	1,690,000	2,530,000	7 - 5	11 - 7	15 - 3	19 - 6	20 - 0†
	1,800	2,100	1,510,000	2,010,000	3,020,000	7 - 10	12 - 4	16 - 3	20 - 0†	20 - 0†
	2,000	2,330	1,770,000	2,360,000	3,540,000	8 - 3	13 - 0	17 - 1	20 - 0†	20 - 0†
	2,200	2,570	2,040,000	2,720,000	4,080,000	8 - 8	13 - 7	17 - 11	20 - 0†	20 - 0†
	2,400	2,800	2,320,000	3,100,000	4,650,000	9 - 0	14 - 2	18 - 9	20 - 0†	20 - 0†
	2,600	3,030	2,620,000	3,490,000	5,240,000	9 - 5	14 - 9	19 - 6	20 - 0†	20 - 0†
	2,800	3,270	2,930,000	3,900,000	5,860,000	9 - 9	15 - 4	20 - 0†	20 - 0†	20 - 0†
	3,000	3,500	3,250,000	4,330,000	6,500,000	10 - 1	15 - 11	20 - 0†	20 - 0†	20 - 0†
16 in.	200	230	50,000	60,000	100,000	2 - 3	3 - 7	4 - 8	6 - 0	7 - 3
	400	470	140,000	180,000	270,000	3 - 2	5 - 0	6 - 7	8 - 5	10 - 3
	600	700	250,000	340,000	500,000	3 - 11	6 - 2	8 - 1	10 - 4	12 - 7
	800	930	390,000	520,000	770,000	4 - 6	7 - 1	9 - 4	11 - 11	14 - 6
	1,000	1,170	540,000	720,000	1,080,000	5 - 1	7 - 11	10 - 6	13 - 4	16 - 3
	1,200	1,400	710,000	950,000	1,420,000	5 - 6	8 - 8	11 - 6	14 - 8	17 - 9
	1,400	1,630	900,000	1,200,000	1,790,000	6 - 0	9 - 5	12 - 5	15 - 10	19 - 3
	1,600	1,870	1,100,000	1,460,000	2,190,000	6 - 5	10 - 0	13 - 3	16 - 11	20 - 0†
	1,800	2,100	1,310,000	1,740,000	2,610,000	6 - 9	10 - 8	14 - 0	17 - 11	20 - 0†
	2,000	2,330	1,530,000	2,040,000	3,060,000	7 - 2	11 - 3	14 - 10	18 - 11	20 - 0†
	2,200	2,570	1,770,000	2,350,000	3,530,000	7 - 6	11 - 9	15 - 6	19 - 10	20 - 0†
	2,400	2,800	2,010,000	2,680,000	4,020,000	7 - 10	12 - 4	16 - 3	20 - 0†	20 - 0†
	2,600	3,030	2,270,000	3,030,000	4,540,000	8 - 2	12 - 10	16 - 10	20 - 0†	20 - 0†
	2,800	3,270	2,540,000	3,380,000	5,070,000	8 - 5	13 - 3	17 - 6	20 - 0†	20 - 0†
	3,000	3,500	2,810,000	3,750,000	5,630,000	8 - 9	13 - 9	18 - 2	20 - 0†	20 - 0†
19.2 in.	200	230	40,000	60,000	90,000	2 - 1	3 - 3	4 - 3	5 - 5	6 - 8
	400	470	130,000	170,000	250,000	2 - 11	4 - 7	6 - 1	7 - 9	9 - 5
	600	700	230,000	310,000	460,000	3 - 7	5 - 7	7 - 5	9 - 5	11 - 6
	800	930	350,000	470,000	710,000	4 - 1	6 - 6	8 - 7	10 - 11	13 - 3
	1,000	1,170	490,000	660,000	990,000	4 - 7	7 - 3	9 - 7	12 - 2	14 - 10
	1,200	1,400	650,000	870,000	1,300,000	5 - 1	7 - 11	10 - 6	13 - 4	16 - 3
	1,400	1,630	820,000	1,090,000	1,640,000	5 - 5	8 - 7	11 - 4	14 - 5	17 - 6
	1,600	1,870	1,000,000	1,330,000	2,000,000	5 - 10	9 - 2	12 - 1	15 - 5	18 - 9
	1,800	2,100	1,190,000	1,590,000	2,390,000	6 - 2	9 - 9	12 - 10	16 - 4	19 - 11
	2,000	2,330	1,400,000	1,860,000	2,800,000	6 - 6	10 - 3	13 - 6	17 - 3	20 - 0†
	2,200	2,570	1,610,000	2,150,000	3,220,000	6 - 10	10 - 9	14 - 2	18 - 1	20 - 0†
	2,400	2,800	1,840,000	2,450,000	3,670,000	7 - 2	11 - 3	14 - 10	18 - 11	20 - 0†
	2,600	3,030	2,070,000	2,760,000	4,140,000	7 - 5	11 - 8	15 - 5	19 - 8	20 - 0†
	2,800	3,270	2,320,000	3,090,000	4,630,000	7 - 9	12 - 2	16 - 0	20 - 0†	20 - 0†
	3,000	3,500	2,570,000	3,420,000	5,130,000	8 - 0	12 - 7	16 - 7	20 - 0†	20 - 0†
24 in.	200	230	40,000	50,000	80,000	1 - 10	2 - 11	3 - 10	4 - 11	5 - 11
	400	470	110,000	150,000	220,000	2 - 7	4 - 1	5 - 5	6 - 11	8 - 5
	600	700	210,000	270,000	410,000	3 - 2	5 - 0	6 - 7	8 - 5	10 - 3
	800	930	320,000	420,000	630,000	3 - 8	5 - 10	7 - 8	9 - 9	11 - 10
	1,000	1,170	440,000	590,000	880,000	4 - 1	6 - 6	8 - 7	10 - 11	13 - 3
	1,200	1,400	580,000	770,000	1,160,000	4 - 6	7 - 1	9 - 4	11 - 11	14 - 6
	1,400	1,630	730,000	980,000	1,460,000	4 - 11	7 - 8	10 - 1	12 - 11	15 - 8
	1,600	1,870	890,000	1,190,000	1,790,000	5 - 3	8 - 2	10 - 10	13 - 9	16 - 9
	1,800	2,100	1,070,000	1,420,000	2,130,000	5 - 6	8 - 8	11 - 6	14 - 8	17 - 9
	2,000	2,330	1,250,000	1,670,000	2,500,000	5 - 10	9 - 2	12 - 1	15 - 5	18 - 9
	2,200	2,570	1,440,000	1,920,000	2,880,000	6 - 1	9 - 7	12 - 8	16 - 2	19 - 8
	2,400	2,800	1,640,000	2,190,000	3,290,000	6 - 5	10 - 0	13 - 3	16 - 11	20 - 0†
	2,600	3,030	1,850,000	2,470,000	3,710,000	6 - 8	10 - 5	13 - 9	17 - 7	20 - 0†
	2,800	3,270	2,070,000	2,760,000	4,140,000	6 - 11	10 - 10	14 - 4	18 - 3	20 - 0†
	3,000	3,500	2,300,000	3,060,000	4,590,000	7 - 2	11 - 3	14 - 10	18 - 11	20 - 0†

† Spans (horizontal projection) are limited to 20 feet in length.

See footnotes 1-2.

Copyright © American Wood Council. Downloaded/printed pursuant to License Agreement. No reproduction or transfer authorized.

Table 2.14D Rafter Spans for 70 psf Ground Snow Load

						2x4	2x6	2x8	2x10	2x12
			$L/\Delta_{LL} = 180$	$L/\Delta_{LL} = 240$	$L/\Delta_{LL} = 360$					
				Attached Ceiling						
	DL = 10 psf	DL = 20 psf	No Attached Ceiling	Flexible Finish (including gypsum board)	Brittle Finish (including plaster and stucco)	Maximum Span[1]				
Rafter Spacing	f_b (psi)	f_b (psi)	E^2 (psi)	E^2 (psi)	E^2 (psi)	(ft-in.)	(ft-in.)	(ft-in.)	(ft-in.)	(ft-in.)
12 in.	200	230	50,000	70,000	100,000	2 - 3	3 - 7	4 - 8	6 - 0	7 - 3
	400	450	140,000	190,000	290,000	3 - 2	5 - 0	6 - 7	8 - 5	10 - 3
	600	680	260,000	350,000	530,000	3 - 11	6 - 2	8 - 1	10 - 4	12 - 7
	800	900	410,000	540,000	810,000	4 - 6	7 - 1	9 - 4	11 - 11	14 - 6
	1,000	1,130	570,000	760,000	1,140,000	5 - 1	7 - 11	10 - 6	13 - 4	16 - 3
	1,200	1,350	750,000	1,000,000	1,490,000	5 - 6	8 - 8	11 - 6	14 - 8	17 - 9
	1,400	1,580	940,000	1,260,000	1,880,000	6 - 0	9 - 5	12 - 5	15 - 10	19 - 3
	1,600	1,800	1,150,000	1,530,000	2,300,000	6 - 5	10 - 0	13 - 3	16 - 11	20 - 0†
	1,800	2,030	1,370,000	1,830,000	2,740,000	6 - 9	10 - 8	14 - 0	17 - 11	20 - 0†
	2,000	2,250	1,610,000	2,140,000	3,210,000	7 - 2	11 - 3	14 - 10	18 - 11	20 - 0†
	2,200	2,480	1,850,000	2,470,000	3,710,000	7 - 6	11 - 9	15 - 6	19 - 10	20 - 0†
	2,400	2,700	2,110,000	2,820,000	4,230,000	7 - 10	12 - 4	16 - 3	20 - 0†	20 - 0†
	2,600	2,930	2,380,000	3,180,000	4,770,000	8 - 2	12 - 10	16 - 10	20 - 0†	20 - 0†
	2,800	3,150	2,660,000	3,550,000	5,330,000	8 - 5	13 - 3	17 - 6	20 - 0†	20 - 0†
	3,000	3,380	2,950,000	3,940,000	5,910,000	8 - 9	13 - 9	18 - 2	20 - 0†	20 - 0†
16 in.	200	230	40,000	60,000	90,000	2 - 0	3 - 1	4 - 1	5 - 2	6 - 3
	400	450	120,000	170,000	250,000	2 - 9	4 - 4	5 - 9	7 - 4	8 - 11
	600	680	230,000	300,000	460,000	3 - 5	5 - 4	7 - 0	9 - 0	10 - 11
	800	900	350,000	470,000	700,000	3 - 11	6 - 2	8 - 1	10 - 4	12 - 7
	1,000	1,130	490,000	660,000	980,000	4 - 5	6 - 11	9 - 1	11 - 7	14 - 1
	1,200	1,350	650,000	860,000	1,290,000	4 - 10	7 - 6	9 - 11	12 - 8	15 - 5
	1,400	1,580	820,000	1,090,000	1,630,000	5 - 2	8 - 2	10 - 9	13 - 8	16 - 8
	1,600	1,800	1,000,000	1,330,000	1,990,000	5 - 6	8 - 8	11 - 6	14 - 8	17 - 9
	1,800	2,030	1,190,000	1,580,000	2,380,000	5 - 10	9 - 3	12 - 2	15 - 6	18 - 10
	2,000	2,250	1,390,000	1,860,000	2,780,000	6 - 2	9 - 9	12 - 10	16 - 4	19 - 11
	2,200	2,480	1,610,000	2,140,000	3,210,000	6 - 6	10 - 2	13 - 5	17 - 2	20 - 0†
	2,400	2,700	1,830,000	2,440,000	3,660,000	6 - 9	10 - 8	14 - 0	17 - 11	20 - 0†
	2,600	2,930	2,060,000	2,750,000	4,130,000	7 - 1	11 - 1	14 - 7	18 - 8	20 - 0†
	2,800	3,150	2,310,000	3,070,000	4,610,000	7 - 4	11 - 6	15 - 2	19 - 4	20 - 0†
	3,000	3,380	2,560,000	3,410,000	5,110,000	7 - 7	11 - 11	15 - 8	20 - 0†	20 - 0†
19.2 in.	200	230	40,000	50,000	80,000	1 - 9	2 - 10	3 - 8	4 - 9	5 - 9
	400	450	110,000	150,000	230,000	2 - 6	4 - 0	5 - 3	6 - 8	8 - 1
	600	680	210,000	280,000	420,000	3 - 1	4 - 10	6 - 5	8 - 2	9 - 11
	800	900	320,000	430,000	640,000	3 - 7	5 - 7	7 - 5	9 - 5	11 - 6
	1,000	1,130	450,000	600,000	900,000	4 - 0	6 - 3	8 - 3	10 - 7	12 - 10
	1,200	1,350	590,000	790,000	1,180,000	4 - 5	6 - 11	9 - 1	11 - 7	14 - 1
	1,400	1,580	740,000	990,000	1,490,000	4 - 9	7 - 5	9 - 9	12 - 6	15 - 2
	1,600	1,800	910,000	1,210,000	1,820,000	5 - 1	7 - 11	10 - 6	13 - 4	16 - 3
	1,800	2,030	1,090,000	1,450,000	2,170,000	5 - 4	8 - 5	11 - 1	14 - 2	17 - 3
	2,000	2,250	1,270,000	1,690,000	2,540,000	5 - 8	8 - 11	11 - 8	14 - 11	18 - 2
	2,200	2,480	1,470,000	1,950,000	2,930,000	5 - 11	9 - 4	12 - 3	15 - 8	19 - 0
	2,400	2,700	1,670,000	2,230,000	3,340,000	6 - 2	9 - 9	12 - 10	16 - 4	19 - 11
	2,600	2,930	1,880,000	2,510,000	3,770,000	6 - 5	10 - 1	13 - 4	17 - 0	20 - 0†
	2,800	3,150	2,110,000	2,810,000	4,210,000	6 - 8	10 - 6	13 - 10	17 - 8	20 - 0†
	3,000	3,380	2,330,000	3,110,000	4,670,000	6 - 11	10 - 10	14 - 4	18 - 3	20 - 0†
24 in.	200	230	40,000	50,000	70,000	1 - 7	2 - 6	3 - 4	4 - 3	5 - 2
	400	450	100,000	140,000	200,000	2 - 3	3 - 7	4 - 8	6 - 0	7 - 3
	600	680	190,000	250,000	370,000	2 - 9	4 - 4	5 - 9	7 - 4	8 - 11
	800	900	290,000	380,000	580,000	3 - 2	5 - 0	6 - 7	8 - 5	10 - 3
	1,000	1,130	400,000	540,000	800,000	3 - 7	5 - 7	7 - 5	9 - 5	11 - 6
	1,200	1,350	530,000	700,000	1,060,000	3 - 11	6 - 2	8 - 1	10 - 4	12 - 7
	1,400	1,580	670,000	890,000	1,330,000	4 - 3	6 - 8	8 - 9	11 - 2	13 - 7
	1,600	1,800	810,000	1,080,000	1,630,000	4 - 6	7 - 1	9 - 4	11 - 11	14 - 6
	1,800	2,030	970,000	1,290,000	1,940,000	4 - 10	7 - 6	9 - 11	12 - 8	15 - 5
	2,000	2,250	1,140,000	1,520,000	2,270,000	5 - 1	7 - 11	10 - 6	13 - 4	16 - 3
	2,200	2,480	1,310,000	1,750,000	2,620,000	5 - 4	8 - 4	11 - 0	14 - 0	17 - 0
	2,400	2,700	1,490,000	1,990,000	2,990,000	5 - 6	8 - 8	11 - 6	14 - 8	17 - 9
	2,600	2,930	1,680,000	2,250,000	3,370,000	5 - 9	9 - 1	11 - 11	15 - 3	18 - 6
	2,800	3,150	1,880,000	2,510,000	3,770,000	6 - 0	9 - 5	12 - 5	15 - 10	19 - 3
	3,000	3,380	2,090,000	2,780,000	4,180,000	6 - 2	9 - 9	12 - 10	16 - 4	19 - 11

† Spans (horizontal projection) are limited to 20 feet in length.

See footnotes 1-2.

Copyright © American Wood Council. Downloaded/printed pursuant to License Agreement. No reproduction or transfer authorized.

Footnotes to Table 2.14B-D

1 Tabulated rafter spans (horizontal projection) assume ceiling joists or rafter ties are located at the bottom of the attic space to resist thrust. When ceiling joists or rafter ties are located higher in the attic space and are used to resist thrust, the rafter spans shall be reduced using the factors given in the following table:

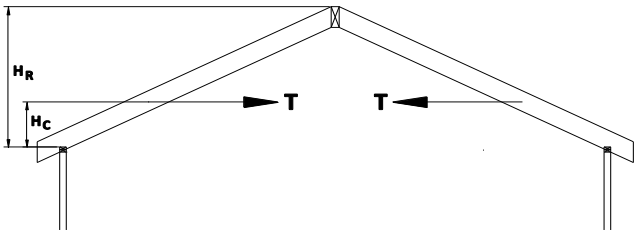

Ceiling Height/Top Plate-to-Roof Ridge Height (H_C / H_R)	Rafter Span Adjustment Factors
1/2	0.58
1/3	0.67
1/4	0.76
1/5	0.83
1/6	0.90
1/7.5 and less	1.00

Note: Lateral deflection of the rafter below the rafter ties may exceed 3/4 inch when rafter ties are located above one-third of the top plate-to-roof ridge height, H_R, or when H_c is greater than 2 feet and may require additional consideration.

2 Tabulated modulus of elasticity requirements, E, are calculated based on live load deflection only.

Copyright © American Wood Council. Downloaded/printed pursuant to License Agreement. No reproduction or transfer authorized.
AMERICAN WOOD COUNCIL

Table 2.15A Roof Framing Capacity Requirements for 20 psf Roof Live Load

		$L/\Delta_{LL} = 180$	$L/\Delta_{LL} = 240$	$L/\Delta_{LL} = 360$	DL = 10 psf		DL = 20 psf	
			Attached Ceiling					
		No Attached Ceiling	Flexible Finish (including gypsum board)	Brittle Finish (including plaster and stucco)				
		Required Capacities						
Framing Spacing	Maximum Span[5] (ft)	Apparent Rigidity[1,2,6] (in.^{2} - lbs)			Moment (ft - lbs)	Bearing[3,4] (lbs)	Moment (ft - lbs)	Bearing[3,4] (lbs)
12 in.	10	6,800,000	9,000,000	13,500,000	380	150	500	200
	11	9,000,000	12,000,000	18,000,000	450	170	610	220
	12	11,700,000	15,600,000	23,300,000	540	180	720	240
	13	14,800,000	19,800,000	29,700,000	630	200	850	260
	14	18,500,000	24,700,000	37,000,000	740	210	980	280
	15	22,800,000	30,400,000	45,600,000	840	230	1,130	300
	16	27,600,000	36,900,000	55,300,000	960	240	1,280	320
	17	33,200,000	44,200,000	66,300,000	1,080	260	1,450	340
	18	39,400,000	52,500,000	78,700,000	1,220	270	1,620	360
	19	46,300,000	61,700,000	92,600,000	1,350	290	1,810	380
	20	54,000,000	72,000,000	108,000,000	1,500	300	2,000	400
16 in.	10	9,000,000	12,000,000	18,000,000	500	200	670	270
	11	12,000,000	16,000,000	24,000,000	610	220	810	290
	12	15,600,000	20,700,000	31,100,000	720	240	960	320
	13	19,800,000	26,400,000	39,500,000	850	260	1,130	350
	14	24,700,000	32,900,000	49,400,000	980	280	1,310	370
	15	30,400,000	40,500,000	60,800,000	1,130	300	1,500	400
	16	36,900,000	49,200,000	73,700,000	1,280	320	1,710	430
	17	44,200,000	59,000,000	88,400,000	1,450	340	1,930	450
	18	52,500,000	70,000,000	105,000,000	1,620	360	2,160	480
	19	61,700,000	82,300,000	123,500,000	1,810	380	2,410	510
	20	72,000,000	96,000,000	144,000,000	2,000	400	2,670	530
19.2 in.	10	10,800,000	14,400,000	21,600,000	600	240	800	320
	11	14,400,000	19,200,000	28,700,000	730	260	970	350
	12	18,700,000	24,900,000	37,300,000	860	290	1,150	380
	13	23,700,000	31,600,000	47,500,000	1,010	310	1,350	420
	14	29,600,000	39,500,000	59,300,000	1,180	340	1,570	450
	15	36,500,000	48,600,000	72,900,000	1,350	360	1,800	480
	16	44,200,000	59,000,000	88,500,000	1,540	380	2,050	510
	17	53,100,000	70,700,000	106,100,000	1,730	410	2,310	540
	18	63,000,000	84,000,000	126,000,000	1,940	430	2,590	580
	19	74,100,000	98,800,000	148,200,000	2,170	460	2,890	610
	20	86,400,000	115,200,000	172,800,000	2,400	480	3,200	640
24 in.	10	13,500,000	18,000,000	27,000,000	750	300	1,000	400
	11	18,000,000	24,000,000	35,900,000	910	330	1,210	440
	12	23,300,000	31,100,000	46,700,000	1,080	360	1,440	480
	13	29,700,000	39,500,000	59,300,000	1,270	390	1,690	520
	14	37,000,000	49,400,000	74,100,000	1,470	420	1,960	560
	15	45,600,000	60,800,000	91,100,000	1,690	450	2,250	600
	16	55,300,000	73,700,000	110,600,000	1,920	480	2,560	640
	17	66,300,000	88,400,000	132,700,000	2,170	510	2,890	680
	18	78,700,000	105,000,000	157,500,000	2,430	540	3,240	720
	19	92,600,000	123,500,000	185,200,000	2,710	570	3,610	760
	20	108,000,000	144,000,000	216,000,000	3,000	600	4,000	800

See footnotes 1-6.

Copyright © American Wood Council. Downloaded/printed pursuant to License Agreement. No reproduction or transfer authorized.
AMERICAN WOOD COUNCIL

Footnotes to Table 2.15A

1 Apparent rigidity capacities shall include the effects of both bending and shear deflections. Apparent rigidity capacities have been adjusted for solid-sawn lumber to account for these effects. Contact the I-joist manufacturer for apparent rigidity capacities to be used for I-joists in this table.

2 Tabulated apparent rigidity requirements assume single span conditions. For continuous span conditions, tabulated apparent rigidity requirements shall be permitted to be multiplied by 0.75.

3 Tabulated bearing capacity requirements are intended for single span applications. For bearing capacity requirements for interior bearing points of continuous span applications, the tabulated bearing capacities shall be multiplied by 2.5.

4 Tabulated bearing capacity requirements are applicable when determining shear capacity requirements for single span applications. For shear capacity requirements of continuous span applications, the tabulated bearing capacities shall be multiplied by 1.25.

5 Tabulated roof framing spans (horizontal projection) in Table 2.15A shall be permitted to be multiplied by the sloped roof adjustment factors in the following table for roof pitches greater than 4:12:

	10 psf Dead	20 psf Dead
Roof Pitch	**Adjustment Factor For Sloped Roofs**	
5:12	1.02	1.01
6:12	1.04	1.03
7:12	1.05	1.04
8:12	1.07	1.05
9:12	1.10	1.07
10:12	1.12	1.08
11:12	1.14	1.10
12:12	1.17	1.12

6 Tabulated apparent rigidity requirements are calculated based on live load deflection only.

Copyright © American Wood Council. Downloaded/printed pursuant to License Agreement. No reproduction or transfer authorized.
AMERICAN WOOD COUNCIL

Table 2.15B Roof Framing Capacity Requirements for 30 psf Ground Snow Load

		L/Δ_{LL} = 180	L/Δ_{LL} = 240	L/Δ_{LL} = 360	DL = 10 psf		DL = 20 psf	
			Attached Ceiling					
		No Attached Ceiling	Flexible Finish (including gypsum board)	Brittle Finish (including plaster and stucco)				
		Required Capacities						
Framing Spacing	Maximum Span (ft)	Apparent Rigidity[1,2,5] (in.^{2} - lbs)			Moment (ft - lbs)	Bearing[3,4] (lbs)	Moment (ft - lbs)	Bearing[3,4] (lbs)
12 in.	10	10,100,000	13,500,000	20,300,000	500	200	630	250
	11	13,500,000	18,000,000	27,000,000	610	220	760	280
	12	17,500,000	23,300,000	35,000,000	720	240	900	300
	13	22,200,000	29,700,000	44,500,000	850	260	1,060	330
	14	27,800,000	37,000,000	55,600,000	980	280	1,230	350
	15	34,200,000	45,600,000	68,300,000	1,130	300	1,410	380
	16	41,500,000	55,300,000	82,900,000	1,280	320	1,600	400
	17	49,700,000	66,300,000	99,500,000	1,450	340	1,810	430
	18	59,000,000	78,700,000	118,100,000	1,620	360	2,030	450
	19	69,400,000	92,600,000	138,900,000	1,810	380	2,260	480
	20	81,000,000	108,000,000	162,000,000	2,000	400	2,500	500
16 in.	10	13,500,000	18,000,000	27,000,000	670	270	830	330
	11	18,000,000	24,000,000	35,900,000	810	290	1,010	370
	12	23,300,000	31,100,000	46,700,000	960	320	1,200	400
	13	29,700,000	39,500,000	59,300,000	1,130	350	1,410	430
	14	37,000,000	49,400,000	74,100,000	1,310	370	1,630	470
	15	45,600,000	60,800,000	91,100,000	1,500	400	1,880	500
	16	55,300,000	73,700,000	110,600,000	1,710	430	2,130	530
	17	66,300,000	88,400,000	132,700,000	1,930	450	2,410	570
	18	78,700,000	105,000,000	157,500,000	2,160	480	2,700	600
	19	92,600,000	123,500,000	185,200,000	2,410	510	3,010	630
	20	108,000,000	144,000,000	216,000,000	2,670	530	3,330	670
19.2 in.	10	16,200,000	21,600,000	32,400,000	800	320	1,000	400
	11	21,600,000	28,700,000	43,100,000	970	350	1,210	440
	12	28,000,000	37,300,000	56,000,000	1,150	380	1,440	480
	13	35,600,000	47,500,000	71,200,000	1,350	420	1,690	520
	14	44,500,000	59,300,000	88,900,000	1,570	450	1,960	560
	15	54,700,000	72,900,000	109,400,000	1,800	480	2,250	600
	16	66,400,000	88,500,000	132,700,000	2,050	510	2,560	640
	17	79,600,000	106,100,000	159,200,000	2,310	540	2,890	680
	18	94,500,000	126,000,000	189,000,000	2,590	580	3,240	720
	19	111,100,000	148,200,000	222,200,000	2,890	610	3,610	760
	20	129,600,000	172,800,000	259,200,000	3,200	640	4,000	800
24 in.	10	20,300,000	27,000,000	40,500,000	1,000	400	1,250	500
	11	27,000,000	35,900,000	53,900,000	1,210	440	1,510	550
	12	35,000,000	46,700,000	70,000,000	1,440	480	1,800	600
	13	44,500,000	59,300,000	89,000,000	1,690	520	2,110	650
	14	55,600,000	74,100,000	111,100,000	1,960	560	2,450	700
	15	68,300,000	91,100,000	136,700,000	2,250	600	2,810	750
	16	82,900,000	110,600,000	165,900,000	2,560	640	3,200	800
	17	99,500,000	132,700,000	199,000,000	2,890	680	3,610	850
	18	118,100,000	157,500,000	236,200,000	3,240	720	4,050	900
	19	138,900,000	185,200,000	277,800,000	3,610	760	4,510	950
	20	162,000,000	216,000,000	324,000,000	4,000	800	5,000	1,000

See footnotes 1-5.

Copyright © American Wood Council. Downloaded/printed pursuant to License Agreement. No reproduction or transfer authorized.

Table 2.15C Roof Framing Capacity Requirements for 50 psf Ground Snow Load

		L/Δ_{LL} = 180	L/Δ_{LL} = 240	L/Δ_{LL} = 360	DL = 10 psf		DL = 20 psf	
			Attached Ceiling					
		No Attached Ceiling	Flexible Finish (including gypsum board)	Brittle Finish (including plaster and stucco)				
		Required Capacities						
Framing Spacing	Maximum Span (ft)	Apparent Rigidity[1,2,5] (in.^{2} - lbs)			Moment (ft - lbs)	Bearing[3,4] (lbs)	Moment (ft - lbs)	Bearing[3,4] (lbs)
12 in.	10	16,900,000	22,500,000	33,800,000	750	300	880	350
	11	22,500,000	29,900,000	44,900,000	910	330	1,060	390
	12	29,200,000	38,900,000	58,300,000	1,080	360	1,260	420
	13	37,100,000	49,400,000	74,100,000	1,270	390	1,480	460
	14	46,300,000	61,700,000	92,600,000	1,470	420	1,720	490
	15	57,000,000	75,900,000	113,900,000	1,690	450	1,970	530
	16	69,100,000	92,200,000	138,200,000	1,920	480	2,240	560
	17	82,900,000	110,500,000	165,800,000	2,170	510	2,530	600
	18	98,400,000	131,200,000	196,800,000	2,430	540	2,840	630
	19	115,700,000	154,300,000	231,500,000	2,710	570	3,160	670
	20	135,000,000	180,000,000	270,000,000	3,000	600	3,500	700
16 in.	10	22,500,000	30,000,000	45,000,000	1,000	400	1,170	470
	11	29,900,000	39,900,000	59,900,000	1,210	440	1,410	510
	12	38,900,000	51,800,000	77,800,000	1,440	480	1,680	560
	13	49,400,000	65,900,000	98,900,000	1,690	520	1,970	610
	14	61,700,000	82,300,000	123,500,000	1,960	560	2,290	650
	15	75,900,000	101,300,000	151,900,000	2,250	600	2,630	700
	16	92,200,000	122,900,000	184,300,000	2,560	640	2,990	750
	17	110,500,000	147,400,000	221,100,000	2,890	680	3,370	790
	18	131,200,000	175,000,000	262,400,000	3,240	720	3,780	840
	19	154,300,000	205,800,000	308,700,000	3,610	760	4,210	890
	20	180,000,000	240,000,000	360,000,000	4,000	800	4,670	930
19.2 in.	10	27,000,000	36,000,000	54,000,000	1,200	480	1,400	560
	11	35,900,000	47,900,000	71,900,000	1,450	530	1,690	620
	12	46,700,000	62,200,000	93,300,000	1,730	580	2,020	670
	13	59,300,000	79,100,000	118,600,000	2,030	620	2,370	730
	14	74,100,000	98,800,000	148,200,000	2,350	670	2,740	780
	15	91,100,000	121,500,000	182,300,000	2,700	720	3,150	840
	16	110,600,000	147,500,000	221,200,000	3,070	770	3,580	900
	17	132,700,000	176,900,000	265,300,000	3,470	820	4,050	950
	18	157,500,000	210,000,000	314,900,000	3,890	860	4,540	1,010
	19	185,200,000	246,900,000	370,400,000	4,330	910	5,050	1,060
	20	216,000,000	288,000,000	432,000,000	4,800	960	5,600	1,120
24 in.	10	33,800,000	45,000,000	67,500,000	1,500	600	1,750	700
	11	44,900,000	59,900,000	89,800,000	1,820	660	2,120	770
	12	58,300,000	77,800,000	116,600,000	2,160	720	2,520	840
	13	74,100,000	98,900,000	148,300,000	2,540	780	2,960	910
	14	92,600,000	123,500,000	185,200,000	2,940	840	3,430	980
	15	113,900,000	151,900,000	227,800,000	3,380	900	3,940	1,050
	16	138,200,000	184,300,000	276,500,000	3,840	960	4,480	1,120
	17	165,800,000	221,100,000	331,600,000	4,340	1,020	5,060	1,190
	18	196,800,000	262,400,000	393,700,000	4,860	1,080	5,670	1,260
	19	231,500,000	308,700,000	463,000,000	5,420	1,140	6,320	1,330
	20	270,000,000	360,000,000	540,000,000	6,000	1,200	7,000	1,400

See footnotes 1-5.

Copyright © American Wood Council. Downloaded/printed pursuant to License Agreement. No reproduction or transfer authorized.
AMERICAN WOOD COUNCIL

Table 2.15D Roof Framing Capacity Requirements for 70 psf Ground Snow Load

		L/Δ_{LL} = 180	L/Δ_{LL} = 240	L/Δ_{LL} = 360	DL = 10 psf		DL = 20 psf	
			Attached Ceiling					
		No Attached Ceiling	Flexible Finish (including gypsum board)	Brittle Finish (including plaster and stucco)				
		Required Capacities						
Framing Spacing	Maximum Span (ft)	Apparent Rigidity[1,2,5] (in.^{2} - lbs)			Moment (ft - lbs)	Bearing[3,4] (lbs)	Moment (ft - lbs)	Bearing[3,4] (lbs)
12 in.	10	23,600,000	31,500,000	47,300,000	1,000	400	1,130	450
	11	31,400,000	41,900,000	62,900,000	1,210	440	1,360	500
	12	40,800,000	54,400,000	81,600,000	1,440	480	1,620	540
	13	51,900,000	69,200,000	103,800,000	1,690	520	1,900	590
	14	64,800,000	86,400,000	129,700,000	1,960	560	2,210	630
	15	79,700,000	106,300,000	159,500,000	2,250	600	2,530	680
	16	96,800,000	129,000,000	193,500,000	2,560	640	2,880	720
	17	116,100,000	154,800,000	232,100,000	2,890	680	3,250	770
	18	137,800,000	183,700,000	275,600,000	3,240	720	3,650	810
	19	162,000,000	216,100,000	324,100,000	3,610	760	4,060	860
	20	189,000,000	252,000,000	378,000,000	4,000	800	4,500	900
16 in.	10	31,500,000	42,000,000	63,000,000	1,330	530	1,500	600
	11	41,900,000	55,900,000	83,900,000	1,610	590	1,820	660
	12	54,400,000	72,600,000	108,900,000	1,920	640	2,160	720
	13	69,200,000	92,300,000	138,400,000	2,250	690	2,540	780
	14	86,400,000	115,200,000	172,900,000	2,610	750	2,940	840
	15	106,300,000	141,800,000	212,600,000	3,000	800	3,380	900
	16	129,000,000	172,000,000	258,000,000	3,410	850	3,840	960
	17	154,800,000	206,300,000	309,500,000	3,850	910	4,340	1,020
	18	183,700,000	244,900,000	367,400,000	4,320	960	4,860	1,080
	19	216,100,000	288,100,000	432,100,000	4,810	1,010	5,420	1,140
	20	252,000,000	336,000,000	504,000,000	5,330	1,070	6,000	1,200
19.2 in.	10	37,800,000	50,400,000	75,600,000	1,600	640	1,800	720
	11	50,300,000	67,100,000	100,600,000	1,940	700	2,180	790
	12	65,300,000	87,100,000	130,600,000	2,300	770	2,590	860
	13	83,000,000	110,700,000	166,100,000	2,700	830	3,040	940
	14	103,700,000	138,300,000	207,400,000	3,140	900	3,530	1,010
	15	127,600,000	170,100,000	255,200,000	3,600	960	4,050	1,080
	16	154,800,000	206,400,000	309,700,000	4,100	1,020	4,610	1,150
	17	185,700,000	247,600,000	371,400,000	4,620	1,090	5,200	1,220
	18	220,400,000	293,900,000	440,900,000	5,180	1,150	5,830	1,300
	19	259,300,000	345,700,000	518,500,000	5,780	1,220	6,500	1,370
	20	302,400,000	403,200,000	604,800,000	6,400	1,280	7,200	1,440
24 in.	10	47,300,000	63,000,000	94,500,000	2,000	800	2,250	900
	11	62,900,000	83,900,000	125,800,000	2,420	880	2,720	990
	12	81,600,000	108,900,000	163,300,000	2,880	960	3,240	1,080
	13	103,800,000	138,400,000	207,600,000	3,380	1,040	3,800	1,170
	14	129,700,000	172,900,000	259,300,000	3,920	1,120	4,410	1,260
	15	159,500,000	212,600,000	318,900,000	4,500	1,200	5,060	1,350
	16	193,500,000	258,000,000	387,100,000	5,120	1,280	5,760	1,440
	17	232,100,000	309,500,000	464,300,000	5,780	1,360	6,500	1,530
	18	275,600,000	367,400,000	551,100,000	6,480	1,440	7,290	1,620
	19	324,100,000	432,100,000	648,200,000	7,220	1,520	8,120	1,710
	20	378,000,000	504,000,000	756,000,000	8,000	1,600	9,000	1,800

See footnotes 1-5.

Copyright © American Wood Council. Downloaded/printed pursuant to License Agreement. No reproduction or transfer authorized.
AMERICAN WOOD COUNCIL

Footnotes to Table 2.15B-D

[1] Apparent rigidity capacities shall include the effects of both bending and shear deflections. Apparent rigidity capacities have been adjusted for solid-sawn lumber to account for these effects. Contact the I-joist manufacturer for apparent rigidity capacities to be used for I-joists in this table.

[2] Tabulated apparent rigidity requirements assume single span conditions. For continuous span conditions, tabulated apparent rigidity requirements shall be permitted to be multiplied by 0.75.

[3] Tabulated bearing capacity requirements are intended for single span applications. For bearing capacity requirements for interior bearing points of continuous span applications, the tabulated bearing capacities shall be multiplied by 2.5.

[4] Tabulated bearing capacity requirements are applicable when determining shear capacity requirements for single span applications. For shear capacity requirements of continuous span applications, the tabulated bearing capacities shall be multiplied by 1.25.

[5] Tabulated apparent rigidity requirements are calculated based on live load deflection only.

Copyright © American Wood Council. Downloaded/printed pursuant to License Agreement. No reproduction or transfer authorized.
AMERICAN WOOD COUNCIL

Table 2.16 Roof Framing Wind Loads (Normal to the Roof Surface)

Wind Speed 3-second gust (mph) (See Figure 1.1)	90	95	100	105	110	115	120	130	140	150	160	170	180	195
Pitched Span Length (ft)	**Wind Load on Rafter (psf)[1,2,3, 4]**													
6	27.7	30.9	34.2	37.7	41.4	45.3	49.3	57.8	67.1	77.0	87.6	98.9	110.8	130.1
8	24.3	27.1	30.0	33.1	36.3	39.7	43.2	50.7	58.8	67.5	76.8	86.6	97.1	114.0
10	21.7	24.1	26.7	29.5	32.3	35.3	38.5	45.1	52.4	60.1	68.4	77.2	86.5	101.5
12	19.5	21.7	24.1	26.5	29.1	31.8	34.6	40.6	47.1	54.1	61.5	69.4	77.8	91.3
14	17.7	19.7	21.8	24.0	26.4	28.8	31.4	36.8	42.7	49.0	55.7	62.9	70.5	82.7
16	16.1	17.9	19.8	21.9	24.0	26.2	28.5	33.5	38.8	44.6	50.7	57.2	64.1	75.3
18	15.1	16.8	18.7	20.6	22.6	24.7	26.9	31.5	36.5	41.9	47.7	53.8	60.4	70.8
20	15.1	16.8	18.7	20.6	22.6	24.7	26.9	31.5	36.5	41.9	47.7	53.8	60.4	70.8

1 Tabulated roof framing wind loads assume a building located in Exposure B with a mean roof height of 33 feet. For buildings located in Exposures B with mean roof heights less than 33 feet, or in Exposures C or D, tabulated values shall be adjusted in accordance with Section 2.1.3.1.

2 Tabulated values shall be permitted to be multiplied by 0.92 for framing not located within 3 feet of corners for buildings less than 30 feet in width (W), or within W/10 of corners for buildings greater than 30 feet in width.

3 Tabulated roof framing wind loads values are calculated using C&C pressure coefficients assuming a roof pitch range greater than 1.5:12 and less than or equal to 6:12. For roof pitches greater than 6:12 and less than or equal to 12:12, tabulated values are permitted to be multiplied by 0.85.

4 Adjusted roof framing wind loads shall not be less than 9.6 psf.

Table 2.17 Ridge Beam Capacity Requirements for Interior Center Bearing Roof and Ceiling

	Roof Dead Load = 10 psf				Roof Dead Load = 20 psf			
Ground Snow Load or Roof Live Load (psf)	**RLL**	**GSL**			**RLL**	**GSL**		
	20	**30**	**50**	**70**	**20**	**30**	**50**	**70**
Roof Span (ft)	**Unit Ridge Beam Loads (plf)**							
12	180	199	291	383	240	259	351	443
24	360	397	582	767	480	517	702	887
36	540	596	873	1150	720	776	1053	1330
40	600	662	970	1278	800	862	1170	1478

Copyright © American Wood Council. Downloaded/printed pursuant to License Agreement. No reproduction or transfer authorized.
AMERICAN WOOD COUNCIL

Table 2.18 Hip and Valley Beam Capacity Requirements

			L/Δ_{LL} = 180	L/Δ_{LL} = 240	L/Δ_{LL} = 360	DL = 10 psf		DL = 20 psf	
			No Attached Ceiling	Flexible Finish (including gypsum board)	Brittle Finish (including plaster and stucco)				
			Required Hip and Valley Beam Capacities						
Ground Snow Load or Roof Live Load	Horizontal Span (ft - in.)	Hip or Valley Area	Apparent Rigidity[1,3] (in.^{2} - lbs)			Moment (ft - lbs)	Bearing[2] (lbs)	Moment (ft - lbs)	Bearing[2] (lbs)
20 psf Roof Live Load	5-8	4'x 4'	1,400,000	1,800,000	2,800,000	170	60	226	80
	8-6	6'x 6'	7,900,000	10,600,000	15,900,000	566	200	754	267
	11-4	8'x 8'	26,300,000	35,000,000	52,500,000	1,358	420	1,810	560
	14-2	10'x 10'	65,300,000	87,100,000	130,600,000	2,715	720	3,620	960
	17-0	12'x 12'	137,800,000	183,800,000	275,600,000	4,609	1,104	6,145	1,473
	18-5	13'x 13'	189,100,000	252,200,000	378,300,000	5,940	1,320	7,920	1,760
	19-10	14'x 14'	255,100,000	340,100,000	510,100,000	7,467	1,560	9,956	2,080
	21-3	15'x 15'	336,800,000	449,100,000	673,700,000	9,164	1,820	12,219	2,427
	22-8	16'x 16'	436,800,000	582,500,000	873,700,000	11,031	2,100	14,708	2,800
	24-0	17'x 17'	557,500,000	743,400,000	1,115,000,000	13,237	2,400	17,649	3,200
	25-5	18'x 18'	701,600,000	935,400,000	1,403,100,000	15,839	2,720	21,119	3,627
	26-10	19'x 19'	871,900,000	1,162,500,000	1,743,700,000	18,668	3,060	24,890	4,080
	28-3	20'x 20'	1,071,400,000	1,428,500,000	2,142,700,000	21,722	3,420	28,963	4,560
30 psf Ground Snow Load	5-8	4'x 4'	1,600,000	2,100,000	3,200,000	187	66	244	86
	8-6	6'x 6'	9,200,000	12,200,000	18,400,000	624	221	813	287
	11-4	8'x 8'	30,300,000	40,400,000	60,700,000	1,498	463	1,950	603
	14-2	10'x 10'	75,400,000	100,600,000	150,900,000	2,996	794	3,901	1,034
	17-0	12'x 12'	159,200,000	212,200,000	318,400,000	5,085	1,218	6,621	1,587
	18-5	13'x 13'	218,400,000	291,300,000	436,900,000	6,553	1,456	8,533	1,896
	19-10	14'x 14'	294,600,000	392,800,000	589,200,000	8,239	1,721	10,728	2,241
	21-3	15'x 15'	389,100,000	518,700,000	778,100,000	10,111	2,008	13,166	2,615
	22-8	16'x 16'	504,500,000	672,700,000	1,009,100,000	12,171	2,317	15,848	3,017
	24-0	17'x 17'	643,900,000	858,600,000	1,287,900,000	14,605	2,648	19,017	3,448
	25-5	18'x 18'	810,300,000	1,080,400,000	1,620,600,000	17,476	3,001	22,756	3,908
	26-10	19'x 19'	1,007,000,000	1,342,700,000	2,014,000,000	20,597	3,376	26,819	4,396
	28-3	20'x 20'	1,237,400,000	1,649,900,000	2,474,800,000	23,967	3,773	31,208	4,913
50 psf Ground Snow Load	5-8	4'x 4'	2,700,000	3,500,000	5,300,000	274	97	331	117
	8-6	6'x 6'	15,300,000	20,400,000	30,600,000	915	323	1,103	390
	11-4	8'x 8'	50,600,000	67,400,000	101,100,000	2,195	679	2,647	819
	14-2	10'x 10'	125,700,000	167,700,000	251,500,000	4,390	1,164	5,295	1,404
	17-0	12'x 12'	265,300,000	353,700,000	530,600,000	7,450	1,785	8,987	2,154
	18-5	13'x 13'	364,100,000	485,400,000	728,100,000	9,603	2,134	11,582	2,574
	19-10	14'x 14'	491,000,000	654,600,000	982,000,000	12,072	2,522	14,561	3,042
	21-3	15'x 15'	648,400,000	864,600,000	1,296,900,000	14,815	2,942	17,870	3,549
	22-8	16'x 16'	840,900,000	1,121,200,000	1,681,800,000	17,833	3,395	21,510	4,095
	24-0	17'x 17'	1,073,200,000	1,431,000,000	2,146,400,000	21,400	3,880	25,812	4,680
	25-5	18'x 18'	1,350,500,000	1,800,700,000	2,701,000,000	25,607	4,397	30,886	5,304
	26-10	19'x 19'	1,678,300,000	2,237,800,000	3,356,600,000	30,179	4,947	36,402	5,967
	28-3	20'x 20'	2,062,400,000	2,749,800,000	4,124,700,000	35,118	5,529	42,359	6,669
70 psf Ground Snow Load	5-8	4'x 4'	3,700,000	5,000,000	7,500,000	361	128	418	148
	8-6	6'x 6'	21,400,000	28,600,000	42,800,000	1,205	426	1,393	493
	11-4	8'x 8'	70,800,000	94,400,000	141,600,000	2,892	895	3,344	1,035
	14-2	10'x 10'	176,000,000	234,700,000	352,100,000	5,784	1,534	6,689	1,774
	17-0	12'x 12'	371,400,000	495,200,000	742,800,000	9,816	2,352	11,352	2,720
	18-5	13'x 13'	509,700,000	679,600,000	1,019,400,000	12,652	2,812	14,631	3,252
	19-10	14'x 14'	687,400,000	916,500,000	1,374,700,000	15,905	3,323	18,394	3,843
	21-3	15'x 15'	907,800,000	1,210,400,000	1,815,600,000	19,520	3,877	22,574	4,483
	22-8	16'x 16'	1,177,300,000	1,569,700,000	2,354,600,000	23,496	4,473	27,173	5,173
	24-0	17'x 17'	1,502,500,000	2,003,300,000	3,005,000,000	28,195	5,112	32,607	5,912
	25-5	18'x 18'	1,890,700,000	2,521,000,000	3,781,500,000	33,737	5,794	39,017	6,700
	26-10	19'x 19'	2,349,700,000	3,132,900,000	4,699,300,000	39,762	6,518	45,985	7,538
	28-3	20'x 20'	2,887,300,000	3,849,800,000	5,774,600,000	46,269	7,285	53,509	8,425

1 Apparent rigidity capacities shall include the effects of both bending and shear deflections. Apparent rigidity capacities have been adjusted for solid-sawn lumber to account for these effects. Contact the structural composite lumber (SCL) manufacturer for apparent rigidity capacities to be used for SCL in this table.

2 Tabulated bearing capacity requirements are applicable when determining shear capacity requirements.

3 Tabulated apparent rigidity requirements are calculated based on live load deflection only.

Copyright © American Wood Council. Downloaded/printed pursuant to License Agreement. No reproduction or transfer authorized.

Copyright © American Wood Council. Downloaded/printed pursuant to License Agreement. No reproduction or transfer authorized.
AMERICAN WOOD COUNCIL

PRESCRIPTIVE DESIGN

3

3.1	General Provisions	115
3.2	Connections	116
3.3	Floor Systems	119
3.4	Wall Systems	121
3.5	Roof Systems	123
List of Figures		125
List of Tables		146
Appendix A		331

Copyright © American Wood Council. Downloaded/printed pursuant to License Agreement. No reproduction or transfer authorized.

Table 3 Prescriptive Design Limitations

	Attribute	Limitation	Reference Section	Figures
BUILDING DIMENSIONS				
Building	Mean Roof Height (MRH)	33'	2.1.3.1	1.2
	Number of Stories	3	1.1.3.1a	-
	Building Length and Width	80'	1.1.3.1b	-
FLOOR SYSTEMS				
Lumber Joists	Joist Span	26'	3.1.3.2a	-
	Joist Spacing	24" o.c.	3.1.3.2b	-
	Cantilevers - Supporting loadbearing walls[1]	d	3.1.3.2c	2.1a
	Setbacks - Loadbearing walls[1]	d	3.1.3.2d	2.1d
Floor Diaphragm	Vertical Floor Offset	d_f	3.1.3.2e	2.1i
	Floor Diaphragm Aspect Ratio	Tables 3.16B and 3.16C	3.1.3.2f	-
	Floor Diaphragm Openings	Lesser of 12' or 50% of Building Dimension	3.1.3.2g	2.1k
WALL SYSTEMS				
Wall Studs	Loadbearing Wall Height	10'	3.1.3.3a	-
	Non-Loadbearing Wall Height	20'	3.1.3.3a	-
	Wall Stud Spacing	24" o.c.	3.1.3.3b	-
Shear Walls	Shear Wall Line Offset[1]	4'	3.1.3.3c	2.1ℓ, 3.1b
	Shear Wall Story Offset[1]	No offset unless per Exception	3.1.3.3d	
	Shear Wall Segment Aspect Ratio	Table 3.17D	3.1.3.3e	
ROOF SYSTEMS				
Lumber Rafters	Rafter Span (Horizontal Projection)[2]	26'	3.1.3.4a	-
	Rafter Spacing	24" o.c.	3.1.3.4b	-
	Eave Overhang Length[1]	Lesser of 2' or rafter span/3	3.1.3.4c	2.1f
	Roof Slope	1.5:12 - 12:12	3.1.3.4d	-
Rakes	Rake Overhang Length[1]	Lesser of 2' or outlooker length/2	3.1.3.4c	2.1g
Roof Diaphragms	Roof Diaphragm Aspect Ratio[1]	Tables 3.16A and 3.16C	3.1.3.4e	-

[1] See exceptions.

[2] For roof snow loads, tabulated spans are limited to 20 ft.

Copyright © American Wood Council. Downloaded/printed pursuant to License Agreement. No reproduction or transfer authorized.

3.1 General Provisions

3.1.1 Prescriptive Requirements

The provisions in Chapter 3 establish a specific set of resistance requirements for buildings meeting the scope of this document (see 1.1). Tabular wind requirements are provided for buildings sited in exposure categories B and C.

3.1.2 Equivalent Materials and Systems

The provisions of this Chapter are not intended to preclude the use of other methods or materials of construction. When alternative methods or materials are used, design loads and capacities shall be determined from the provisions of Chapter 2.

3.1.3 Prescriptive Design Limitations

Wood frame buildings built in accordance with Chapter 3 of this document shall be limited to the conditions of this section (see Table 3). Conditions not complying with Chapter 3 of this document shall be designed in accordance with accepted engineering practice in accordance with Chapter 2.

3.1.3.1 Wind Exposure and Mean Roof Height

Tabulated wind requirements in Chapter 3 are provided for exposure categories B and C at a mean roof height of up to 33 feet. The building shall neither exceed three stories nor a mean roof height of 33 feet, measured from average grade to average roof elevation (see Figure 3.1a). Habitable attics shall be considered an additional floor for purposes of determining gravity and seismic loads.

3.1.3.2 Floor Systems

a. Framing Member Spans Single spans of floor framing members shall not exceed 26 feet for lumber joists.

b. Framing Member Spacings Floor framing member spacings shall not exceed 24 inches on center for lumber joists, I-joists, and floor trusses.

c. Cantilevers Lumber floor joist cantilevers supporting loadbearing walls shall not exceed the depth, d, of the joists (see Figure 2.1a). Lumber floor joist cantilevers supporting non-loadbearing walls shall be limited to L/4 (see Figure 2.1b). Lumber joists shall be located directly over studs when used in cantilever conditions.

> **EXCEPTION:** For roof live loads and ground snow loads less than or equal to 20 psf and 30 psf, respectively, lumber floor joist cantilevers supporting load-bearing walls shall not exceed one-eighth of the backspan when supporting only a roof load where the roof clear span does not exceed 28 feet.

d. Setbacks Setbacks of loadbearing walls on lumber floor joist systems shall not exceed the depth, d, of the joists (see Figure 2.1d). Lumber floor joists shall be located directly over studs when used in setback conditions supporting loadbearing walls.

e. Vertical Floor Offsets Vertical floor offsets shall be limited to the floor depth, d_f, (including floor framing members and floor sheathing), and the floor framing members on each side of the offset shall be lapped or tied together to provide a direct tension tie across the offset, and to transfer diaphragm shear in both orthogonal directions (see Figure 2.1i).

f. Diaphragm Aspect Ratio Floor diaphragm lengths shall be in accordance with Tables 3.16B and 3.16C.

g. Diaphragm Openings Floor diaphragm openings shall not exceed the lesser of 12 feet or 50% of the building dimension (see Figure 2.1k).

3.1.3.3 Wall Systems

a. Wall Heights Loadbearing walls shall not exceed 10 feet in height. Non-loadbearing walls shall not exceed 20 feet in height.

b. Wall Stud Spacings Wall stud spacings shall not exceed 24 inches on center.

c. Shear Wall Line Offsets Offsets in a shear wall line within a story shall not exceed 4 feet (see Figure 2.1ℓ).

> **EXCEPTION:** Where shear wall line offsets exceed these limits, the structure shall be designed as separate structures attached in the plane of the offset. Shear wall length for the shared wall shall be the sum of the lengths required for the shared wall of each attached structure. For the purpose of determining wind loads, the structure shall be permitted to be considered as a rectangular structure with perimeter dimensions which inscribe the total structure (see Figure 3.1b). Distribution of shear loads into shear wall lines shall be proportional to the diaphragm area tributary to each shear wall line or by other accepted engineering practice.

Copyright © American Wood Council. Downloaded/printed pursuant to License Agreement. No reproduction or transfer authorized.
AMERICAN WOOD COUNCIL

d. Shear Wall Story Offsets Upper story shear wall segments shall not be offset in-plane or out-of-plane from lower story shear wall segments.

EXCEPTION: Shear wall segments shall be permitted to be offset out-of-plane (see Figure 3.1c) from the story below by a maximum distance equal to the depth, d, of the floor joists where all of the following conditions are met:

1. Upper and lower story shear wall segments are attached to the floor diaphragm through wall plate to blocking connections and wall plate to band joist connections in accordance with Table 3.1.
2. Floor diaphragm wood structural panel sheathing is nailed to blocking and band joists at 6 inches on center in accordance with the edge nail spacing requirements of Table 3.1.
3. Allowable unit shear capacity for the shear wall above does not exceed 436 plf for wind or 239 plf for seismic in accordance with Table 3.17D.
4. Floor joists supporting the shear wall are nominal 2x8 or larger, tripled at ends of shear walls, and provide support for loads from roof and ceiling only.
5. Continuous load path is provided for uplift in accordance with 3.2.2 and overturning in accordance with Section 3.2.4.

e. Shear Wall Aspect Ratio Shear wall aspect ratios shall not exceed the limits in Table 3.17D.

f. Shear Wall Orientation Shear wall lines shall be oriented to resist loads in two orthogonal directions.

g. Load Transfer Band joists, blocking, or other methods to transfer roof, wall, and/or floor loads from upper stories shall be installed between floor framing members for 2 and 3 story structures (see Figures 3.4d and 3.5a).

3.1.3.4 Roof Systems

a. Framing Spans Single spans (horizontal projection) of roof framing members shall not exceed 26 feet for lumber rafters. The total roof span shall not exceed 36 feet.

b. Framing Spacings Roof framing member spacings shall not exceed 24 inches on center for lumber rafters, I-joists, and roof trusses.

c. Overhang Lengths Rafter overhang lengths shall not exceed one-third of the rafter span or 2 feet, whichever is less (see Figure 2.1f). Rake overhangs shall not exceed the lesser of one-half of the outlooker length or 2 feet (see Figure 2.1g).

EXCEPTION: Rake overhangs using lookout blocks shall not exceed 9 inches (see Figure 2.1h).

d. Slope Roof slope shall not exceed 12:12.

e. Diaphragm Aspect Ratio Roof diaphragm lengths shall be in accordance with Tables 3.16A and 3.16C.

3.1.4 Interpolation

Tabulated values in this Chapter shall be permitted to be interpolated unless otherwise noted in the applicable table footnotes.

3.2 Connections

3.2.1 Lateral Framing and Shear Connections

3.2.1.1 Roof Assembly

Roof framing connections shall be in accordance with the requirements of Table 3.1.

3.2.1.2 Roof Assembly to Wall Assembly

Lateral framing and shear connections for rafter, ceiling joist, or truss to top plate shall be in accordance with the requirements of Table 3.4. Prescriptive solutions are provided for lateral framing and shear connections in Table 3.4A.

3.2.1.3 Wall Assembly

Lateral framing connections for top and bottom plate to wall stud shall be in accordance with the requirements of Table 3.5. Prescriptive solutions are provided for lateral framing connections in 3.5A. Other wall assembly lateral framing and shear connections shall be in accordance with the requirements of Table 3.1.

3.2.1.4 Wall Assembly to Floor Assembly

Lateral framing and shear connections for bottom plate to floor assembly shall be in accordance with the requirements of Table 3.1.

3.2.1.5 Floor Assembly

Floor framing connections shall be in accordance with

Copyright © American Wood Council. Downloaded/printed pursuant to License Agreement. No reproduction or transfer authorized.
AMERICAN WOOD COUNCIL

the requirements of Table 3.1.

3.2.1.6 Floor Assembly to Wall Assembly or Sill Plate

Lateral framing and shear connections for floor assembly to sill, top plate, or girder shall be in accordance with the requirements of Table 3.1.

3.2.1.7 Wall Assembly or Sill Plate to Foundation

Sill plates or wall bottom plates shall be anchored to the foundation system to resist lateral and shear loads from wind in accordance with the requirements of Table 3.2. Prescriptive solutions are provided for sill plate to foundation in Table 3.2A, and for bottom plate to foundation in Table 3.2B. Sill plates or wall bottom plates shall be anchored to the foundation system to resist seismic shear loads in accordance with the requirements of Table 3.3. Prescriptive solutions are provided for sill or bottom plate to foundation in Table 3.3A. A minimum of one anchor bolt shall be provided within 6 to 12 inches of each end of each plate. Anchor bolts shall have a minimum embedment of 7 inches in concrete foundations and slabs-on-grade or 7 inches in masonry block foundations when resisting lateral and shear loads only (see Figures 3.2a-c). Anchor bolts shall be located within 12 inches of corners and at spacings specified in Tables 3.2A-B or Table 3.3A, but not exceeding 6 feet on center. Sill plates or bottom plates shall have full bearing on the foundation system.

3.2.2 Uplift Connections

3.2.2.1 Roof Assembly to Wall Assembly

Rafter or truss to wall uplift connections shall be in accordance with the requirements of Section 3.2.2.1. Prescriptive solutions using uplift straps are provided in Table A-3.4. Where rafters or trusses are not attached directly to studs, rafters or trusses shall be attached to the wall top plate and the wall top plate shall be attached to the wall stud with uplift connections in accordance with Table 3.4. Roof to top plate connections shall be on the same side of the wall as top plate to stud connections unless other methods are used to prevent twisting of the top plate due to eccentric loading (see Figure 3.2j-k). Wood structural panels shall be permitted to resist wall top plate to wall stud uplift when designed in accordance with 3.2.3. Prescriptive solutions to resist wind uplift are provided in Table 3.4B.

3.2.2.2 Wall Assembly to Wall Assembly

Story to story uplift connections from upper story wall stud to lower story wall stud shall be in accordance with the requirements of Table 3.4. Prescriptive solutions using uplift straps are provided in Table A-3.4. Where upper story wall studs are not attached directly to lower story wall studs, the studs shall be attached to a common member in the floor assembly with uplift connections in accordance with Table 3.4. Wood structural panels shall be permitted to resist wall plate to wall stud uplift when designed in accordance with 3.2.3. Prescriptive solutions to resist wind uplift are provided in Table 3.4B.

3.2.2.3 Wall Assembly to Foundation

First floor wall studs shall be connected to the foundation, sill plate, or bottom plate in accordance with the requirements of Table 3.2. Prescriptive solutions for stud to foundation, sill plate, or bottom plate using uplift straps are provided in Table A-3.4 (see Figures 3.2a-e).

Steel connectors used to resist uplift shall be a minimum of a 1-1/4″ x 20 gage ASTM A653 Grade 33 steel strap and have a minimum embedment of 7 inches in concrete foundations and slabs-on-grade, 15 inches in masonry block foundations, or be lapped under the plate and nailed in accordance with the steel connector requirements (see Figures 3.2a-c). Where the steel strap is lapped under the bottom plate, 3 inch square washers shall be used on the anchor bolts and anchor bolt spacings shall not exceed the requirements specified in Table 3.2C. If steel connectors that only fasten to one side of the bottom plate are used, the square washer shall extend to within ½ inch of the edge of the plate to which the connector is nailed. Steel straps embedded in or in contact with slab-on-grade or masonry block foundations shall be hot-dipped galvanized after fabrication, or manufactured from G185 or Z450 galvanized steel.

Wood structural panels shall be permitted to resist wall stud to foundation, sill plate, or bottom plate uplift when designed in accordance with 3.2.3. Prescriptive solutions to resist wind uplift are provided in Table 3.4B. Where wood structural panels are used to resist uplift, bottom plates or sill plates shall be anchored in accordance with 3.2.3.6.

3.2.3 Wood Structural Panels Resisting Uplift

Wood structural panels shall be permitted to be used to resist uplift alone or simultaneously to resist uplift and shear from wind forces.

3.2.3.1 Nailing

Nails in any single row shall not be spaced closer than 3 inches on center.

3.2.3.2 Panels

Panels shall have a minimum thickness of 7/16 inch and

Copyright © American Wood Council. Downloaded/printed pursuant to License Agreement. No reproduction or transfer authorized.
AMERICAN WOOD COUNCIL

shall be installed with the strength axis parallel to the studs.

3.2.3.3 Horizontal Joints

All horizontal joints shall occur over common framing members or common blocking and shall meet all other requirements of 3.4.4.2.

3.2.3.4 Openings

Where windows and doors interrupt wood structural panel sheathing or siding, framing anchors or connectors shall be provided to resist and transfer the appropriate uplift loads around the opening and into the foundation.

3.2.3.5 Sheathing Extending to Top Plate

The top edge of the wood structural panel shall be attached to the upper top plate. Nail row, end spacing, and edge spacing shall be as shown in Figure 3.2f. Roof or upper level uplift connectors shall be on the same side of the wall as the sheathing unless other methods are used to prevent twisting of the top plate due to eccentric loading (see Figure 3.2j-k).

3.2.3.6 Sheathing Extending to Bottom Plate or Sill Plate

The bottom edge of the wood structural panel shall extend to and be attached to the bottom plate or sill plate as shown in Figure 3.2f. Anchorage of bottom plates or sill plates to the foundation shall be designed to resist the combined uplift and shear forces developed in the wall. Anchors shall be spaced at 16 inches on center or less.

a. Where anchor bolts are used, a minimum 0.229″ x 3″ x 3″ steel plate washer shall be used at each anchor bolt location. The edge of the plate washer shall extend to within ½ inch of the edge of the bottom plate on the sheathed side.
b. Where other anchoring devices are used to anchor the wall to the foundation, they shall be installed on the same side of the wall as the sheathing unless other approved methods are used.

3.2.3.7 Sheathing Splices

a. In multi-story applications where the upper story and lower story sheathing adjoin over a common horizontal framing member, the nail spacing shall be not less than 3 inches on center for a single row and not less than 6 inches on center for a double row in Table 3.4B (see Figure 3.2g).
b. In single or multi-story applications where horizontal joints in the sheathing occur over blocking between studs, nailing of the sheathing to the studs above and below the joint shall be designed to transfer the uplift across the joint using provisions of *SDPWS* 4.4.1.7(2) (see Figure 3.2h). Blocking shall be in accordance with 3.2.3.3 for shear transfer.

Exception: Horizontal blocking and sheathing tension splices placed between studs and backing the horizontal joint shall be permitted to be used to resist both uplift and shear at sheathing splices over studs provided the following conditions are met (see Figure 3.2i):

a. sheathing tension splices shall be made from the same thickness and grade as the shear wall sheathing.
b. edges of sheathing shall be nailed to sheathing tension splices using the same nail size and spacing as the sheathing or siding nails at the bottom plate.

3.2.4 Overturning Resistance

3.2.4.1 Hold-downs

Hold-downs shall be installed at the end of each shear wall in accordance with 3.4.4.2.3 (see Figures 3.8a-b). A continuous load path from the hold-down to the foundation shall be maintained. Where a hold-down resists the overturning load from the story or stories above, the hold-down shall be sized for the required hold-down tension capacity at its level plus the required hold-down tension capacity of the story or stories above. For walls sheathed with materials other than those specified in 3.4.4.2, hold-down tension capacity at each level shall equal the tabulated shear capacity in Table 3.17D times the wall height.

3.2.5 Sheathing and Cladding Attachment

3.2.5.1 Roof Sheathing

Roof sheathing attachment shall be in accordance with the minimum nailing requirements specified in Table 3.10. A prescriptive solution is provided for 7/16" nominal thickness roof sheathing in Table 3.10A.

3.2.5.2 Wall Sheathing

Wall sheathing attachment shall be in accordance with the minimum nailing requirements specified in Table 3.11.

3.2.5.3 Floor Sheathing

Floor sheathing shall be attached with a minimum of

Copyright © American Wood Council. Downloaded/printed pursuant to License Agreement. No reproduction or transfer authorized.

8d common nails spaced at a maximum of 6 inches on center at panel edges and 12 inches on center in the panel field.

3.2.5.4 Roof Cladding

Roof cladding shall be attached in accordance with the manufacturer's recommendations.

3.2.5.5 Wall Cladding

Wall cladding shall be attached in accordance with the minimum nailing requirements in Table 3.11 or comply with the manufacturer's recommendations.

3.2.6 Special Connections

3.2.6.1 Ridge Connection Requirements

Ridge connections shall be in accordance with the requirements given in Table 3.6. Prescriptive solutions for ridge straps are provided in Table A-3.6. Where ridge straps are used, they shall attach to opposing rafters.

> **EXCEPTION:** Ridge straps are not required when collar ties (collar beams) of nominal 1x6 or 2x4 lumber are located in the upper third of the attic space and attached to rafters in accordance with Table A-3.6.

3.2.6.2 Jack Rafters

Jack rafters shall be attached to the wall assembly in accordance with 3.2.2.1 and attached to hip beams in accordance with Table 3.6.

3.2.6.3 Non-Loadbearing Wall Assemblies

Rake outlooker overhang to wall, wall to wall, and wall to foundation connections shall be in accordance with the requirements given in Table 3.4C. Walls which do not support the roof assembly and are attached in accordance with 3.2.1 need no additional uplift connections.

3.2.6.4 Connections around Wall Openings

3.2.6.4.1 Header and/or Girder to Stud Connections Header and/or girder to stud connections shall be in accordance with the requirements given in Table 3.7. Window sill plate to stud connections shall be in accordance with the requirements given in Table 3.8.

3.2.6.4.2 Top and Bottom Plate to Full Height Studs When the number of full height studs required at each end of a header are selected from Table 3.23C, each stud shall be connected in accordance with the requirements given in Table 3.5. Prescriptive solutions for top and bottom plate to stud connections are provided in Table 3.5A.

> **EXCEPTION:** When the number of full height studs required at each end of a header are selected from Table 3.23D, the capacity of the connection of the top or bottom plate to each full height stud shall be equal to the unit lateral load, w (plf), given in Table 3.5 times half of the header span, L/2 (ft), divided by the required number of full height studs, NFH, selected from Table 3.23D.
>
> Top or Bottom Plate to Each Full Height Stud Connection = w * (L/2) / NFH

3.3 Floor Systems

3.3.1 Lumber Joist Systems

3.3.1.1 Floor Joists

Floor joists shall be in accordance with the maximum spans for common species and grades of lumber floor joists specified in Tables 3.18A-B.

3.3.1.1.1 Notching and Boring Notches in the top or bottom edge of solid-sawn joists shall not be located in the middle one-third of the joist span. Notches in the outer thirds of the span shall not exceed one-sixth of the actual joist depth, and shall not be longer than one-third of the depth of the member. Where notches are made at the supports, they shall not exceed one-fourth the actual joist depth. Bored holes are limited in diameter to one-third the actual joist depth and the edge of the hole shall not be closer than 2 inches to the top or bottom edge of the joist. Bored holes shall not be located closer than 2 inches to a notch (see Figure 3.3a).

3.3.1.2 Bearing

Joists shall bear directly on beams, girders, ledgers, or loadbearing walls or be supported by hangers. Joist bearing shall not be less than 1-1/2 inches on wood or metal or 3 inches on masonry (see Figures 3.4a-e). Beams and girders shall bear on loadbearing walls, piles, concrete or masonry foundations, or beam hangers (see Figure 3.4f).

3.3.1.3 End Restraint

Restraint against twisting shall be provided at the end of each joist by fastening to a rim, band joist, header, or other member or by using full-height blocking between floor joist ends. Fasteners for end restraint shall be provided in accordance with Table 3.1 (see Figures 3.4a-e).

3.3.1.4 Lateral Stability

The following rules shall be applied to provide lateral restraint to prevent rotation or lateral displacement. If the ratio of depth to breadth, d/b, based on nominal dimensions is:

Copyright © American Wood Council. Downloaded/printed pursuant to License Agreement. No reproduction or transfer authorized.
AMERICAN WOOD COUNCIL

a. **d/b ≤ 2;** no lateral support shall be required.
b. **2 < d/b ≤ 4;** the ends shall be held in position, as by full depth solid blocking, bridging, hangers, nailing or bolting to other framing members, or other acceptable means.
c. **4 < d/b ≤ 5;** the compression edge of the member shall be held in line for its entire length to prevent lateral displacement, as by adequate sheathing or subflooring, and ends at point of bearing shall be held in position to prevent rotation and/or lateral displacement.
d. **5 < d/b ≤ 6;** bridging, full depth solid blocking or diagonal cross bracing shall be installed at intervals not exceeding 8 feet, the compression edge of the member shall be held in line as by adequate sheathing or subflooring, and ends at point of bearing shall be held in position to prevent rotation and/or lateral displacement.
e. **6 < d/b ≤ 7;** both edges of the member shall be held in line for their entire length and ends at points of bearing shall be held in position to prevent rotation and/or lateral displacement.

If a bending member is subjected to both flexure and axial compression, the depth to breadth ratio shall be permitted to be as much as 5 to 1 if one edge is firmly held in line. If under all combinations of load, the unbraced edge of the member is in tension, the depth to breadth ratio shall be permitted to be no more than 6 to 1.

3.3.1.5 Single or Continuous Floor Joists

3.3.1.5.1 Single or Continuous Floor Joists Supporting Loadbearing Walls Loadbearing walls parallel to joists shall be directly supported by beams, girders, or other loadbearing walls. Loadbearing walls perpendicular to joists shall not be offset from supporting girders, beams, or other loadbearing walls by more than the depth of the joists (see Figures 2.1d and 3.5a).

3.3.1.5.2 Single or Continuous Floor Joists Supporting Non-Loadbearing Walls Where non-loadbearing walls are parallel to floor joists, the joist supporting the non-loadbearing wall shall be doubled (see Figure 3.5b).

> **EXCEPTION:** When the non-loadbearing wall is located between two floor joists, the floor joists need not be doubled. Solid blocking shall be installed at intervals not exceeding 32 inches on center to transfer the wall load to the supporting joists (see Figure 3.5c).

3.3.1.5.3 Single or Continuous Floor Joists Supporting Concentrated Loads Where concentrated loads exceeding 300 pounds must be supported by floor joists, the joist supporting the load shall be doubled (see Figure 3.5d).

3.3.1.6 Cantilevered Floor Joists

3.3.1.6.1 Cantilevered Floor Joists Supporting Loadbearing Walls Overhang lengths of cantilevered floor joists supporting a loadbearing wall at the end of the cantilever shall be limited to the depth of the joists (see Figure 2.1a).

> **EXCEPTION:** For roof live loads and ground snow loads less than or equal to 20 psf and 30 psf, respectively, cantilevers shall not exceed one-eighth of the joist span for lumber joists supporting only a roof with a clear span of 28 feet or less. Lumber joists shall be located directly over studs when used in cantilever conditions supporting loadbearing walls (see Figure 2.1a).

3.3.1.6.2 Cantilevered Floor Joists Supporting Non-Loadbearing Walls Overhang lengths of cantilevered floor joists supporting a non-loadbearing wall at the end of the cantilever shall not exceed one-fourth of the joist span (see Figure 2.1b).

3.3.1.7 Floor Diaphragm Openings

Trimmers and headers shall be doubled when the header span exceeds 4 feet. Headers more than 6 feet in length shall be supported by joist hangers or framing anchors unless they bear on a partition, beam, or wall. Tail joists which exceed 12 feet in length shall be supported on framing anchors or on ledger strips not less than nominal 2x2 inches (see Figures 3.6a-b). Nailing requirements are given in Table 3.1.

3.3.2 Wood I-Joist Systems

Wood I-joist systems shall meet the requirements of 2.3.2.

3.3.3 Wood Floor Truss Systems

Wood floor truss systems shall meet the requirements of 2.3.3. See Table 3.19 for representative metal plate connected wood floor truss span tables. Actual design spans will vary by truss manufacturer as a result of specific design conditions.

3.3.4 Floor Sheathing

3.3.4.1 Sheathing Spans

Floor sheathing spans shall not exceed the provisions of Table 3.14.

Copyright © American Wood Council. Downloaded/printed pursuant to License Agreement. No reproduction or transfer authorized.

3.3.4.2 Sheathing Edge Support

Edges of floor sheathing shall have approved tongue-and-groove joints or shall be supported with blocking, unless ¼ inch minimum thickness underlayment or 1½ inches of approved cellular or lightweight concrete is installed, or unless the finish floor is of ¾ inch wood strip.

3.3.5 Floor Diaphragm Bracing

For 3-second gust wind speeds greater than 130 mph (See Figure 1.1), blocking and connections shall be provided at panel edges perpendicular to floor framing members in the first two bays of framing and shall be spaced at a maximum of 4 feet on center. Nailing requirements are given in Table 3.1 (see Figure 3.7b).

3.4 Wall Systems

3.4.1 Exterior Walls

3.4.1.1 Wood Studs

Wall studs shall be in accordance with the maximum spans for common species and grades of wall studs specified in Tables 3.20A-B and spaced in accordance with Table 3.20C. Exterior loadbearing studs shall be limited to a height of 10 feet or less between horizontal supports as specified in Table 3.20C. Exterior non-loadbearing studs shall be limited to a height of 14 feet or less for 2x4 studs and 20 feet or less for 2x6 and 2x8 studs in accordance with Table 3.20C.

3.4.1.1.1 Notching and Boring Notches in either edge of studs shall not be located in the middle one-third of the stud length. Notches in the outer thirds of the stud length shall not exceed 25% of the actual stud depth. Bored holes shall not exceed 40% of the actual stud depth and the edge of the hole shall not be closer than 5/8 inch to the edge of the stud (see Figure 3.3b). Notches and holes shall not occur in the same cross-section.

> **EXCEPTION:** Bored holes shall not exceed 60% of the actual stud depth when studs are doubled.

3.4.1.1.2 Stud Continuity Studs shall be continuous between horizontal supports, including but not limited to: girders, floor diaphragm assemblies, ceiling diaphragm assemblies, and roof diaphragm assemblies. When attic floor diaphragm or ceiling diaphragm assemblies are used to brace gable endwalls, the sheathing and fasteners shall be as specified in Table 3.15. The framing and connections shall be capable of transferring the loads into the ceiling or attic floor diaphragm (see Figures 3.7a-b).

3.4.1.1.3 Corners A minimum of three studs shall be provided at each corner of an exterior wall (see Figures 3.8a-b).

> **EXCEPTION:** Reduced stud requirements shall be permitted provided shear walls are not continuous to corners. Framing must be capable of transferring axial tension and compression loads from above and providing adequate backing for the attachment of sheathing and cladding materials.

3.4.1.2 Top Plates

Double top plates shall be provided at the top of all exterior stud walls. The double plates shall overlap at corners and at intersections with other exterior or interior loadbearing walls (see Figure 3.8d). Double top plates shall be lap spliced with end joints offset in accordance with the minimum requirements given in Table 3.21.

3.4.1.3 Bottom Plates

Bottom plates shall not be less than 2 inch nominal thickness and not less than the width of the wall studs. Studs shall have full bearing on the bottom plate.

3.4.1.4 Wall Openings

Headers shall be provided over all exterior wall openings. Headers shall be supported by wall studs, jack studs, hangers, or framing anchors (see Figures 3.9a-b).

3.4.1.4.1 Headers Maximum spans for common species of lumber headers and structural glued laminated timber beams used in exterior loadbearing walls shall not exceed the lesser of the applicable spans given in Tables 3.22A-E and Table 3.23A. Maximum spans for common species of lumber headers used in exterior non-loadbearing walls shall not exceed spans given in Table 3.23B.

3.4.1.4.2 Full Height Studs Full height studs shall meet the same requirements as exterior wall studs selected in 3.4.1.1 (see Figures 3.9a-b). The minimum number of full height studs at each end of the header shall not be less than half the number of studs replaced by the opening, in accordance with Table 3.23C.

> **EXCEPTION:** The minimum number of full height studs at each end of the header shall be permitted to be reduced in accordance with Table 3.23D. The capacity of the connection of the top

Copyright © American Wood Council. Downloaded/printed pursuant to License Agreement. No reproduction or transfer authorized.
AMERICAN WOOD COUNCIL

or bottom plate to each full height stud shall be equal to the unit lateral load, w (plf) given in Table 3.5 times half of the header span, L/2 (ft.), divided by the required number of full height studs, NFH, selected from Table 3.23D.

Top or Bottom Plate to Each Full Height Stud Connection = w * (L/2) / NFH

3.4.1.4.3 Jack Studs Jack studs shall be at least Stud grade lumber. The minimum number of jack studs supporting each end of a header shall not be less than jack stud requirements given in Table 3.22F (see Figures 3.9a-b). Full height studs selected in accordance with 3.4.1.4.2 shall be permitted to replace an equivalent number of jack studs, when adequate gravity connections are provided.

3.4.1.4.4 Window Sill Plates Maximum spans for window sill plates used in exterior walls shall not exceed the spans given in Table 3.23B.

3.4.2 Interior Loadbearing Partitions

3.4.2.1 Wood Studs

Interior loadbearing studs shall be at least Stud grade lumber.

EXCEPTION: Interior loadbearing studs supporting only a roof shall be at least Utility grade lumber.

3.4.2.1.1 Notching and Boring Notches in either edge of studs shall not be located in the middle one-third of the stud length. Notches in the outer thirds of the stud length shall not exceed 25% of the actual stud depth. Bored holes in interior loadbearing studs shall not exceed 40% of the actual stud depth and shall not be closer than 5/8 inch to the edge. Notches and holes shall not occur in the same cross-section (see Figure 3.3b).

EXCEPTION: Bored holes shall not exceed 60% of the actual stud depth when studs are doubled.

3.4.2.1.2 Stud Continuity Studs shall be continuous between horizontal supports, including but not limited to: girders, floor diaphragm assemblies, ceiling diaphragm assemblies, and roof diaphragm assemblies.

3.4.2.2 Top Plates

Double top plates shall be provided at the top of all interior loadbearing partition walls. The double plates shall overlap at corners and at intersections with other exterior or interior loadbearing walls (see Figure 3.8d).

3.4.2.3 Bottom Plates

Bottom plates shall not be less than 2 inch nominal thickness and not less than the width of the wall studs. Studs shall have full bearing on the bottom plate.

3.4.2.4 Wall Openings

Headers shall be provided over all interior loadbearing wall openings. Headers shall be supported by wall studs, jack studs, joist hangers, or framing anchors.

3.4.2.4.1 Headers Maximum spans for common species of lumber headers and glued laminated beams are given in Tables 3.24A-B.

3.4.2.4.2 Studs Supporting Header Beams Jack studs shall be at least Stud grade lumber. The minimum number of jack studs supporting each end of a header shall not be less than jack stud requirements given in Table 3.24C (see Figures 3.9a-b). An equivalent number of full height studs shall be permitted to replace jack studs, when adequate gravity connections are provided.

3.4.3 Interior Non-Loadbearing Partitions

3.4.3.1 Wood Studs

Interior non-loadbearing studs shall be at least Utility grade lumber.

3.4.3.1.1 Notching and Boring Notches in studs shall not exceed 40% of the stud depth. Bored holes shall not exceed 60% of the stud depth and shall not be closer than 5/8 inch to the edge. Notches and holes shall not occur in the same cross-section.

3.4.3.2 Top Plates

Single or double top plates shall be provided at the top of all stud walls.

3.4.3.3 Bottom Plates

Bottom plates shall not be less than 2 inch nominal thickness and not less than the width of the wall studs. Studs shall have full bearing on the bottom plate.

3.4.4 Wall Sheathing

3.4.4.1 Sheathing and Cladding

Exterior wall sheathing shall be in accordance with the minimum requirements specified in Table 3.13A. Exterior wall cladding shall be in accordance with the minimum requirements specified in Table 3.13B.

3.4.4.2 Exterior Shear Walls

a. Wind Loads Segmented shear walls shall be in accordance with the full height sheathing requirements

Copyright © American Wood Council. Downloaded/printed pursuant to License Agreement. No reproduction or transfer authorized.
AMERICAN WOOD COUNCIL

specified in Table 3.17A. Tabulated values assume wall studs are spaced at a maximum of 16 inches on center, are sheathed with 3/8 inch wood structural panels on the exterior attached with 8d common nails at 6 inches on center at panel edges and 12 inches on center in the field, and 1/2 inch gypsum wallboard on the interior attached with 5d cooler nails at 7 inches on center at panel edges and 10 inches on center in the field. Exterior sheathing shall be continuous from the bottom plate to the upper top plate, with all panel edges over framing. For other sheathing materials or sheathing configurations see 3.4.4.2.1.

b. Seismic Loads Segmented shear walls shall be in accordance with the full height sheathing requirements specified in Table 3.17C. Tabulated values assume wall studs are spaced at a maximum of 16 inches on center and are sheathed with 3/8 inch wood structural panels on the exterior attached with 8d common nails at 6 inches on center at panel edges and 12 inches on center in the field. Exterior sheathing shall be continuous from the bottom plate to the upper top plate, with all panel edges over framing. For other sheathing materials or sheathing configurations see 3.4.4.2.1.

c. Interior Shear Walls Where an interior shear wall is used, the structure shall be designed as separate structures attached in the plane of the interior shear wall. Shear wall length of the shared wall (interior shear wall) shall be the sum of the lengths required for the shear wall of each attached structure.

3.4.4.2.1 Sheathing Type Adjustments When other sheathing material or nailing patterns are used, the length requirements in Tables 3.17A and 3.17C shall be multiplied by the appropriate length adjustment factor in Table 3.17D.

3.4.4.2.2 Perforated Shear Wall Adjustments When perforated shear walls are used, the shear wall length requirements in Tables 3.17A and 3.17C shall be multiplied by the appropriate full-height sheathing length adjustment factors in Table 3.17E. Combinations of identically sheathed segmented and perforated walls shall be permitted.

3.4.4.2.3 Hold-downs Hold-downs with a capacity in accordance with Table 3.17F, divided by the appropriate length adjustment factor in Table 3.17D, are required at the end of each shear wall segment or at each end of a perforated shear wall. Where full height shear wall segments meet at a corner, a single hold-down shall be permitted to be used to resist the overturning forces in both directions when the corner framing in the adjoining walls is fastened together to transfer the uplift load (see Figures 3.8a-b).

3.5 Roof Systems

3.5.1 Lumber Rafter Systems

3.5.1.1 Rafters

Rafters shall be in accordance with the maximum spans (horizontal projection) for common species of lumber rafters specified in Table 3.26A-C for live loads, 3.26D-L for snow loads, and 3.26M for wind loads. The span of each rafter shall be measured along the horizontal projection of the rafter.

3.5.1.1.1 Jack Rafters Jack rafters shall be sized in accordance with 3.5.1.1.

3.5.1.1.2 Rafter Overhangs Rafter overhangs shall not exceed the lesser of one-third of the rafter span or 2 feet (see Figure 2.1f).

3.5.1.1.3 Rake Overhangs Rake overhang outlookers shall use continuous 2x4 members connected in accordance with 3.2.6.3. Rake overhangs shall not exceed the lesser of one-half of the outlooker length or 2 feet (see Table 3.4C).

EXCEPTION: Rake overhangs using lookout blocks shall not exceed 9 inches (see Figure 2.1h).

3.5.1.1.4 Notching and Boring Notches in the top or bottom edge of solid-sawn rafters shall not be cut in the middle one-third of the rafter span. Notches in the outer thirds of the span shall not exceed one-sixth of the actual rafter depth. Where notches are made at supports, they shall not exceed one-fourth the actual rafter depth. Bored holes are limited in diameter to one-third the actual rafter depth and the edge of the hole shall not be closer than 2 inches to the top or bottom edges (see Figure 3.3a).

3.5.1.2 Bearing

Rafters shall bear directly on beams, girders, ledgers, or loadbearing walls or be supported by approved joist hangers or framing anchors. Rafter bearing shall not be less than 1½ inches on wood, metal, or masonry.

3.5.1.3 End Restraint

Where the nominal depth to thickness ratio of a solid-sawn rafter exceeds 3, restraint against twisting shall be provided at the end of each rafter by fastening to a rim board or by using full-height blocking between rafter ends. Fasteners for end restraint shall be provided in accordance with Table 3.1.

Copyright © American Wood Council. Downloaded/printed pursuant to License Agreement. No reproduction or transfer authorized.
AMERICAN WOOD COUNCIL

EXCEPTION: Where ceiling joists are attached directly to rafters, the combined bearing thickness of the ceiling joist and rafter shall be used to determine the depth to thickness ratio.

3.5.1.4 Ridge Beams

Ridge beams shall be installed at roof peaks. Ridge beams shall be in accordance with the maximum spans for common species of lumber beams and structural glued laminated timber beams specified in Table 3.29. Rafters shall bear directly on the ridge beam or be supported by hangers or framing anchors (see Figure 3.10a). Ceiling joists or rafter ties shall not be required where a ridge beam is provided.

EXCEPTION: A ridge board shall be permitted to be substituted for a ridge beam when roof slopes equal or exceed 3 in 12. The ridge board shall be at least 1 inch nominal in thickness and not less than the depth of the cut end of the rafter. The rafters shall be placed directly opposite each other. Ceiling joists or rafter ties shall be used to provide a continuous tie between exterior walls. Ceiling joist/rafter tie to rafter connections shall be in accordance with Tables 3.9. Prescriptive solutions for ceiling joist/rafter tie to rafter connections are provided in Table 3.9A (see Figures 3.10b-c).

3.5.1.5 Hip and Valley Beams

Hip and valley beams shall be in accordance with the maximum spans (horizontal projection) for common species of lumber hip and valley beams specified in Table 3.28, respectively (see Figures 3.12a-c).

3.5.1.6 Ceiling Joists

Ceiling joists shall be in accordance with the maximum spans for common species of solid sawn ceiling joists specified in Tables 3.25A-B, and shall be braced in accordance with 3.3.1.4.

3.5.1.7 Open Ceilings

When ceiling joists and roof ties are omitted and the rafters are used to create an open (cathedral) ceiling, rafter ends shall be supported on bearing walls, headers, or ridge beams. Rafters shall be attached to the support at each end in accordance with 3.2.

3.5.1.8 Roof Openings

Trimmers and headers shall be doubled when the header span exceeds 4 feet. Headers more than 6 feet in length shall be supported at the ends by rafter hangers or framing anchors unless they bear on a partition, beam, or wall. Tail rafters which exceed 12 feet in length shall be supported on framing anchors (see Figures 3.11a-c). Nailing requirements are given in Table 3.1.

3.5.2 Wood I-Joist Roof Systems

Wood I-joist rafter systems shall meet the requirements of 2.5.2.

3.5.3 Wood Roof Truss Systems

Wood roof truss systems shall meet the requirements of 2.5.3. See Table 3.27 for representative metal plate connected wood roof truss span tables. Actual design spans will vary by truss manufacturer as a result of specific design conditions.

3.5.4 Roof Sheathing

3.5.4.1 Sheathing

Roof sheathing shall be in accordance with the minimum requirements of Tables 3.12A and 3.12B.

3.5.4.2 Sheathing Edge Support

Edges of all 3/8-inch wood structural panel roof sheathing, or 7/16-inch wood structural panel roof sheathing supported at 24 inches on center, shall be supported with blocking or edge clips.

3.5.5 Roof Diaphragm Bracing

For 3-second gust wind speeds greater than 130 mph (See Figure 1.1) blocking and connections shall be provided, at panel edges perpendicular to roof framing members in the first two bays of framing, and shall be spaced at a maximum of 4 feet on center. Nailing requirements are given in Table 3.1 (see Figure 3.7b).

EXCEPTION: When an attic floor or ceiling diaphragm is used to brace the gable endwall or when a hip roof system is used, additional roof diaphragm blocking is not required.

Copyright © American Wood Council. Downloaded/printed pursuant to License Agreement. No reproduction or transfer authorized.

List of Figures

3.1a Determining the Mean Roof Height (MRH) and Top Plate to Roof Ridge Height (h_R) 126

3.1b Method for Addressing Shear Wall Line Offsets..... 126

3.1c Shear Wall Offset..... 127

3.2a Sill Plate Anchorage to Concrete Foundation Wall..... 128

3.2b Sill Plate Anchorage to Masonry Foundation Wall..... 128

3.2c Bottom Plate Anchorage to Slab-on-Grade 128

3.2d Wall Assembly to Permanent Wood Foundation..... 129

3.2e Wall Assembly to Piles 129

3.2f Panel Attachment..... 130

3.2g Panel Splice Occurring over Horizontal Framing Members 130

3.2h Panel Splice Occurring across Studs 131

3.2i Sheathing Splice Plate (Alternative Detail).... 131

3.2j Roof to Top Plate Connection Through Sheathing 132

3.2k Roof to Top Plate Uplift Connection..... 132

3.3a Solid Sawn Joist and Rafter Notching and Boring Limits..... 133

3.3b Stud Notching and Boring Limits..... 133

3.4a Joists Framing on a Solid Sawn Girder 134

3.4b Joists Framing on a Ledger..... 134

3.4c Joists Framing on a Steel Beam..... 134

3.4d Joist Framing on a Stud Wall..... 135

3.4e Joist Framing on a Foundation Sill Plate..... 135

3.4f Girder Bearing on a Concrete Wall 135

3.4g Cantilever Floor - 3D View 135

3.5a Loadbearing Wall Offset from Support 136

3.5b Double Joist Under a Non-Loadbearing Wall..... 136

3.5c Blocking Under a Non-Loadbearing Wall..... 136

3.5d Double Joist Under a Bathtub..... 136

3.6a Floor Opening - Stairway 137

3.6b Floor Opening - Stairway With Landing 137

3.7a Ceiling Bracing Gable Endwall..... 138

3.7b Floor Bracing Endwall 138

3.8a Corner Stud Hold-down Detail - 3 Studs With Blocking..... 139

3.8b Corner Stud Hold-down Detail - 4 Studs 139

3.8c Interior Stud Detail..... 139

3.8d Top Plate Intersection Detail 139

3.9a Studs and Headers Around Wall Openings..... 140

3.9b Studs and Headers Around Wall Openings - Bay Window 140

3.10a Ridge Beam Details..... 141

3.10b Ridge Board and Ceiling Joist Detail 141

3.10c Ridge Board and Rafter Tie Detail 141

3.11a Roof Openings - Chimney..... 142

3.11b Roof Openings - Gable Dormer 142

3.11c Roof Openings - Shed Dormer..... 143

3.12a Hip Roof Framing Detail..... 144

3.12b Valley Roof Framing Detail..... 145

3.12c Valley Beam Roof Framing Detail 145

Copyright © American Wood Council. Downloaded/printed pursuant to License Agreement. No reproduction or transfer authorized.
AMERICAN WOOD COUNCIL

Figure 3.1a Determining the Mean Roof Height (MRH) and Top Plate to Roof Ridge Height (h_R)
(Mean Roof Height Shall Not Exceed 33')

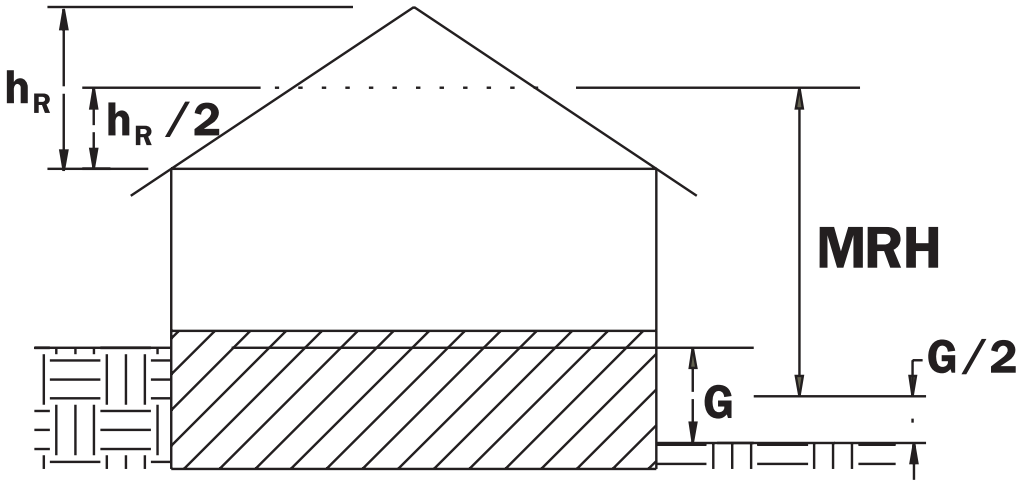

Figure 3.1b Method for Addressing Shear Wall Line Offsets

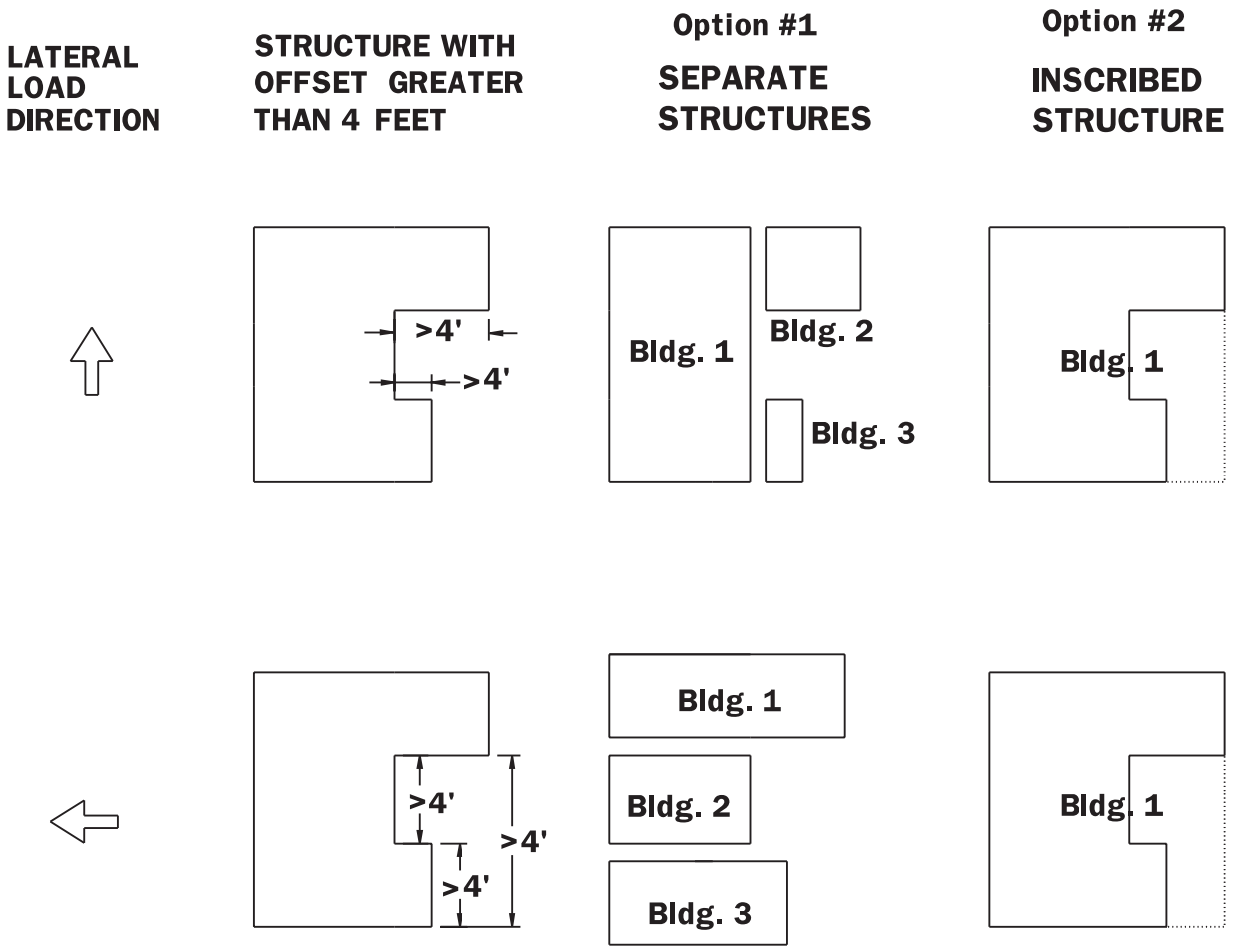

Copyright © American Wood Council. Downloaded/printed pursuant to License Agreement. No reproduction or transfer authorized.

Figure 3.1c Shear Wall Offset

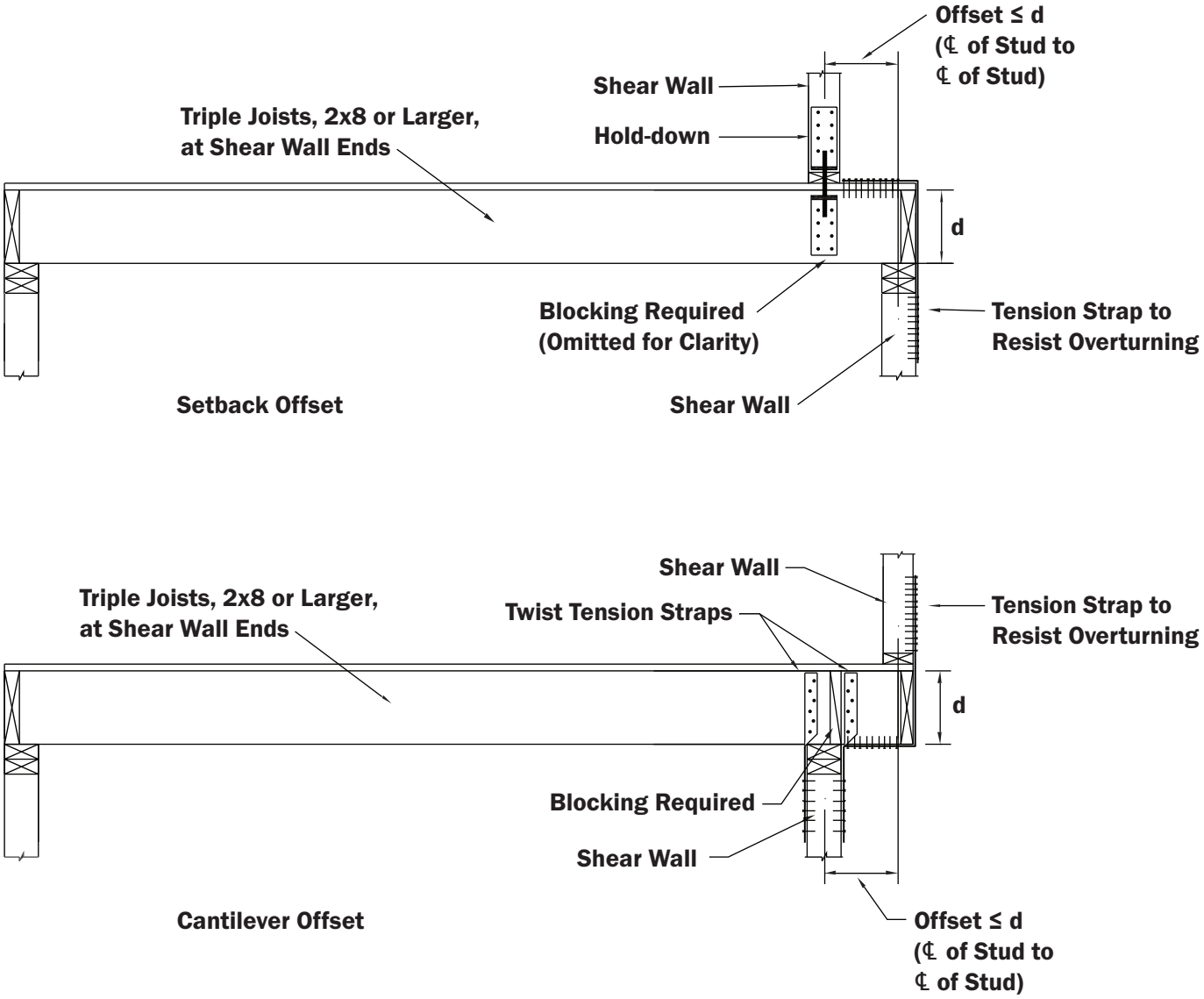

Copyright © American Wood Council. Downloaded/printed pursuant to License Agreement. No reproduction or transfer authorized.
AMERICAN WOOD COUNCIL

Figure 3.2a Sill Plate Anchorage to Concrete Foundation Wall

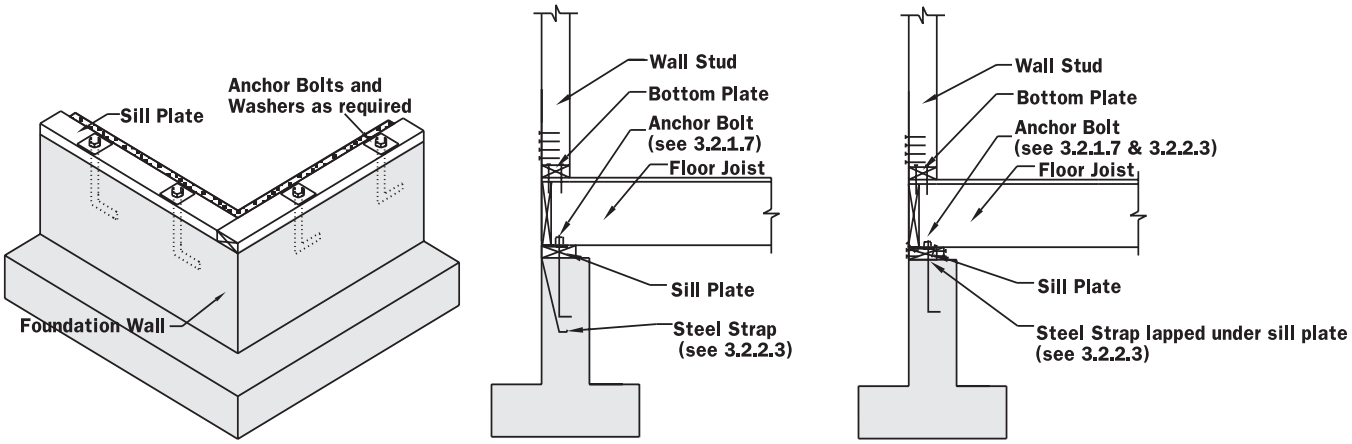

Figure 3.2b Sill Plate Anchorage to Masonry Foundation Wall

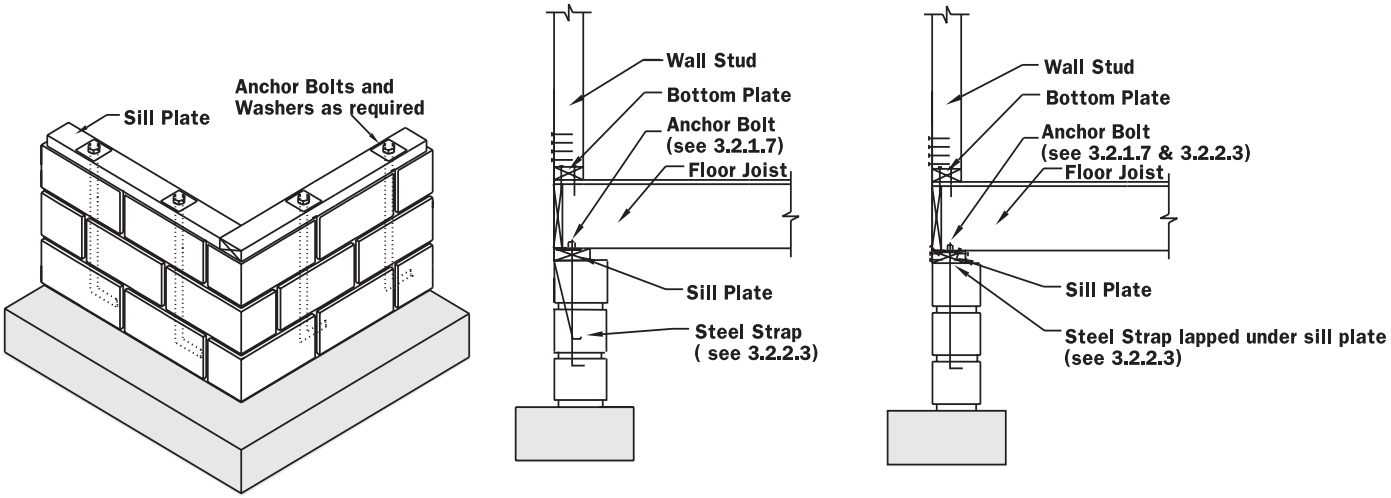

Figure 3.2c Bottom Plate Anchorage to Slab-on-Grade

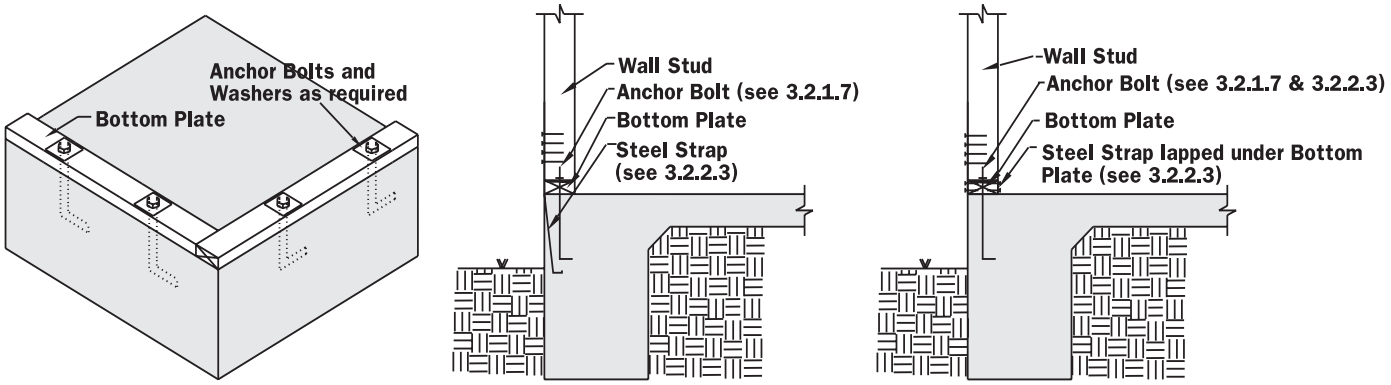

Copyright © American Wood Council. Downloaded/printed pursuant to License Agreement. No reproduction or transfer authorized.

Figure 3.2d Wall Assembly to Permanent Wood Foundation

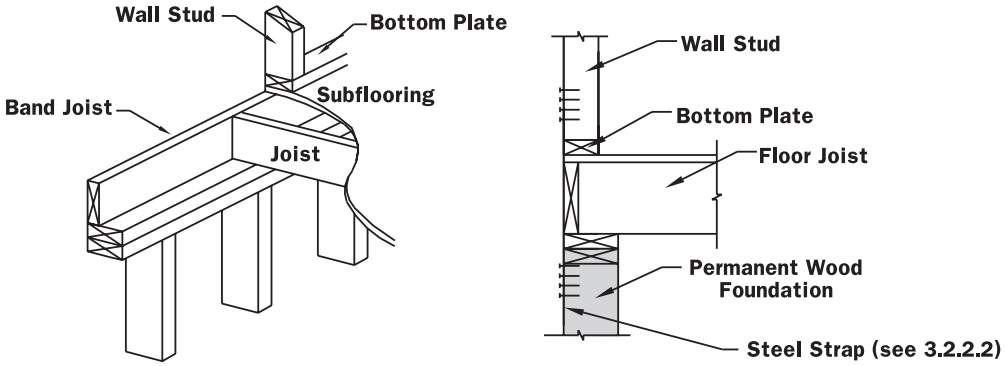

Figure 3.2e Wall Assembly to Piles

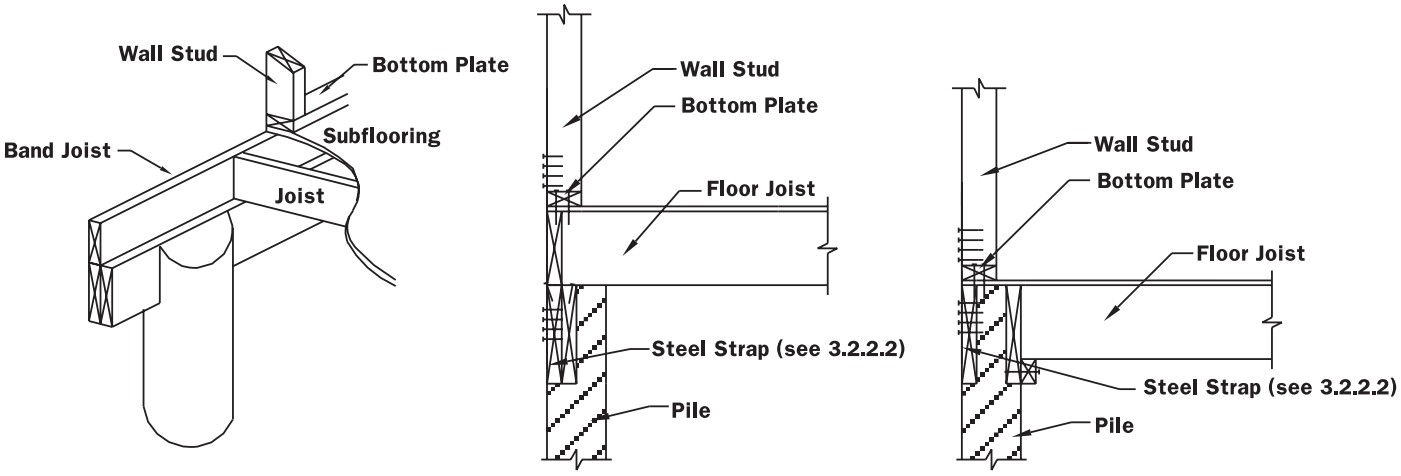

Copyright © American Wood Council. Downloaded/printed pursuant to License Agreement. No reproduction or transfer authorized.
AMERICAN WOOD COUNCIL

Figure 3.2f Panel Attachment

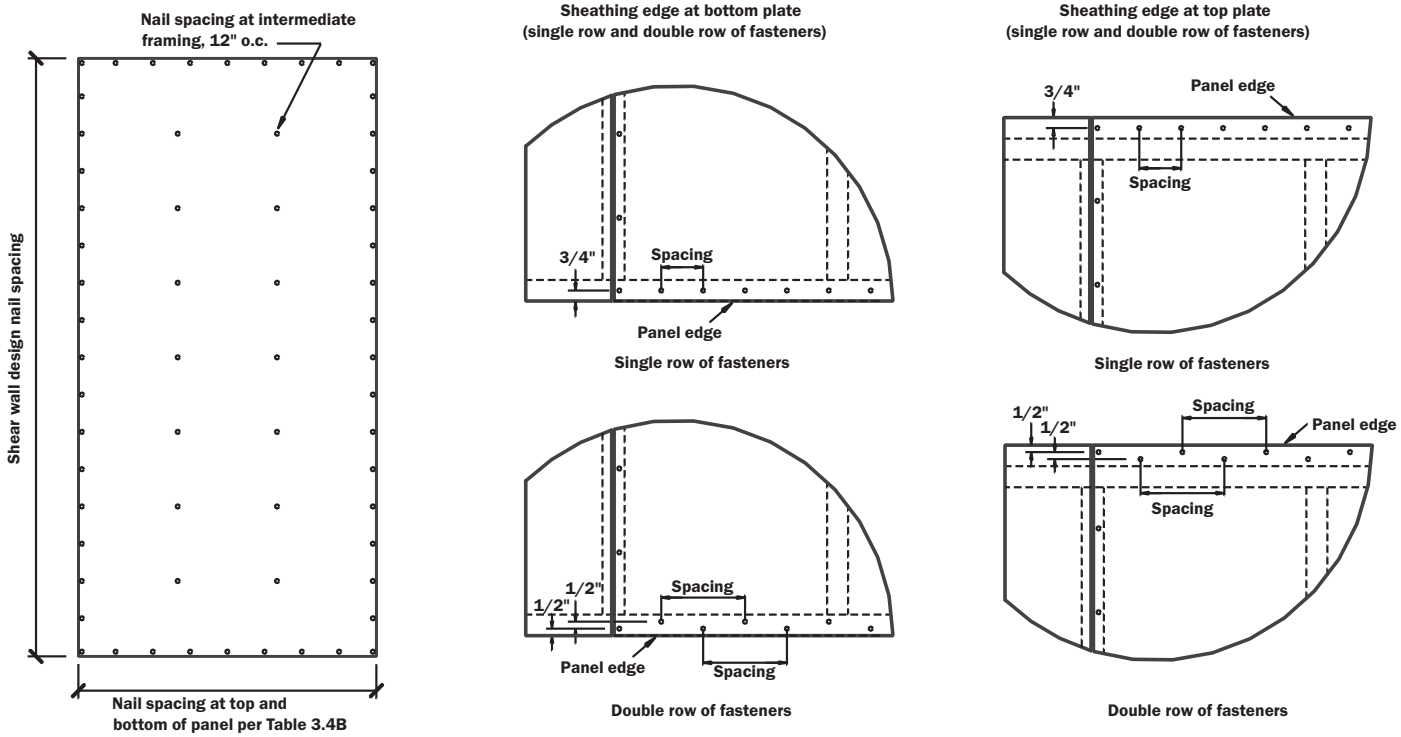

Figure 3.2g Panel Splice Occurring over Horizontal Framing Members

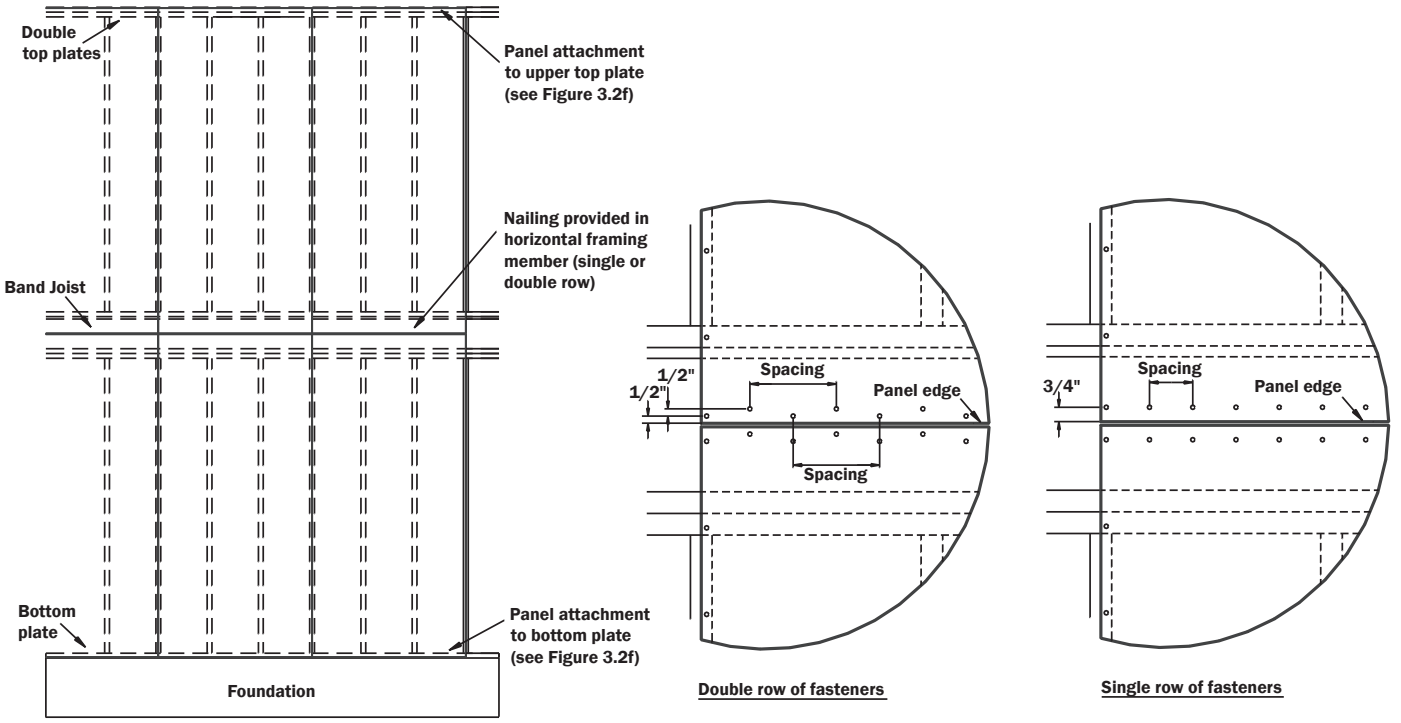

Copyright © American Wood Council. Downloaded/printed pursuant to License Agreement. No reproduction or transfer authorized.

Figure 3.2h Panel Splice Occurring across Studs

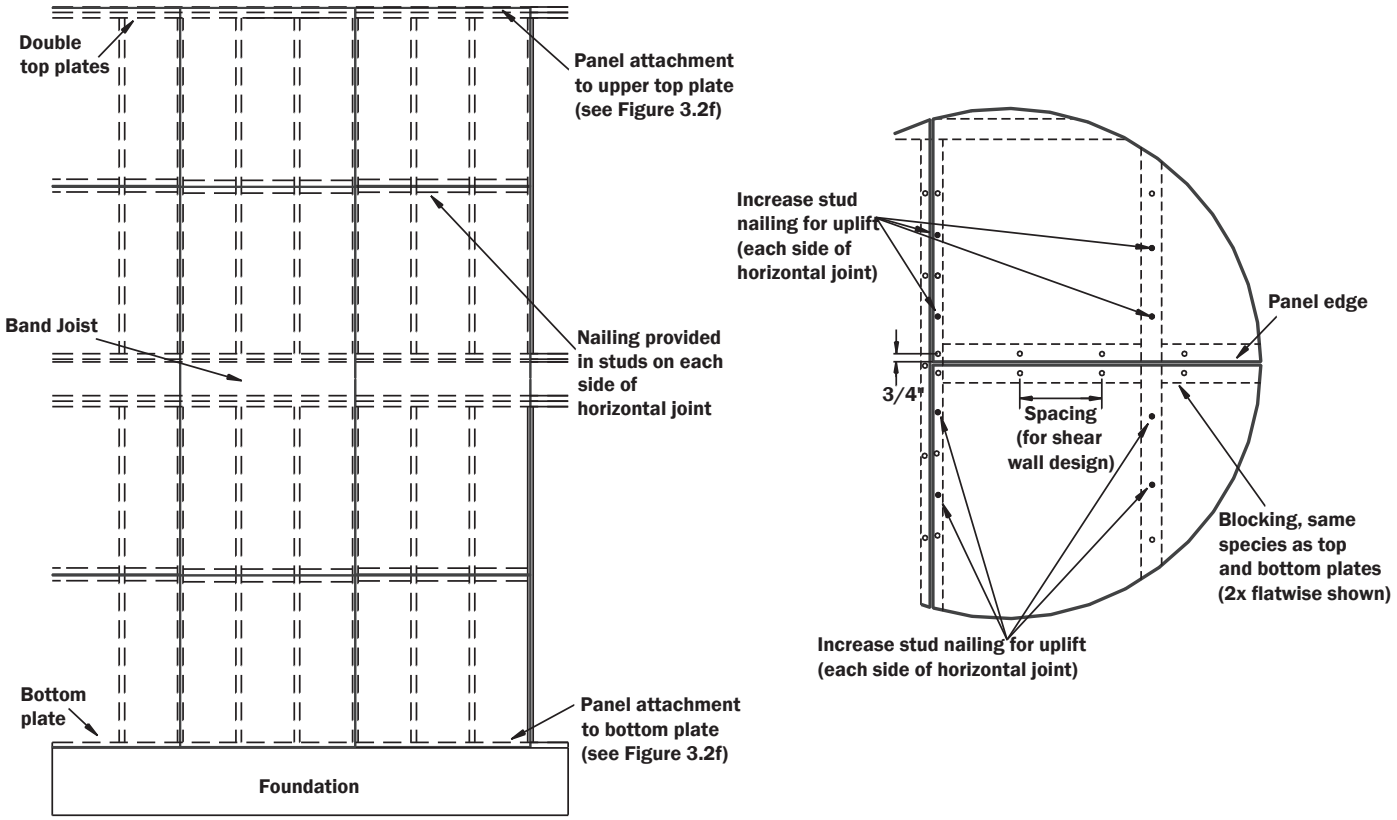

Figure 3.2i Sheathing Splice Plate (Alternative Detail)

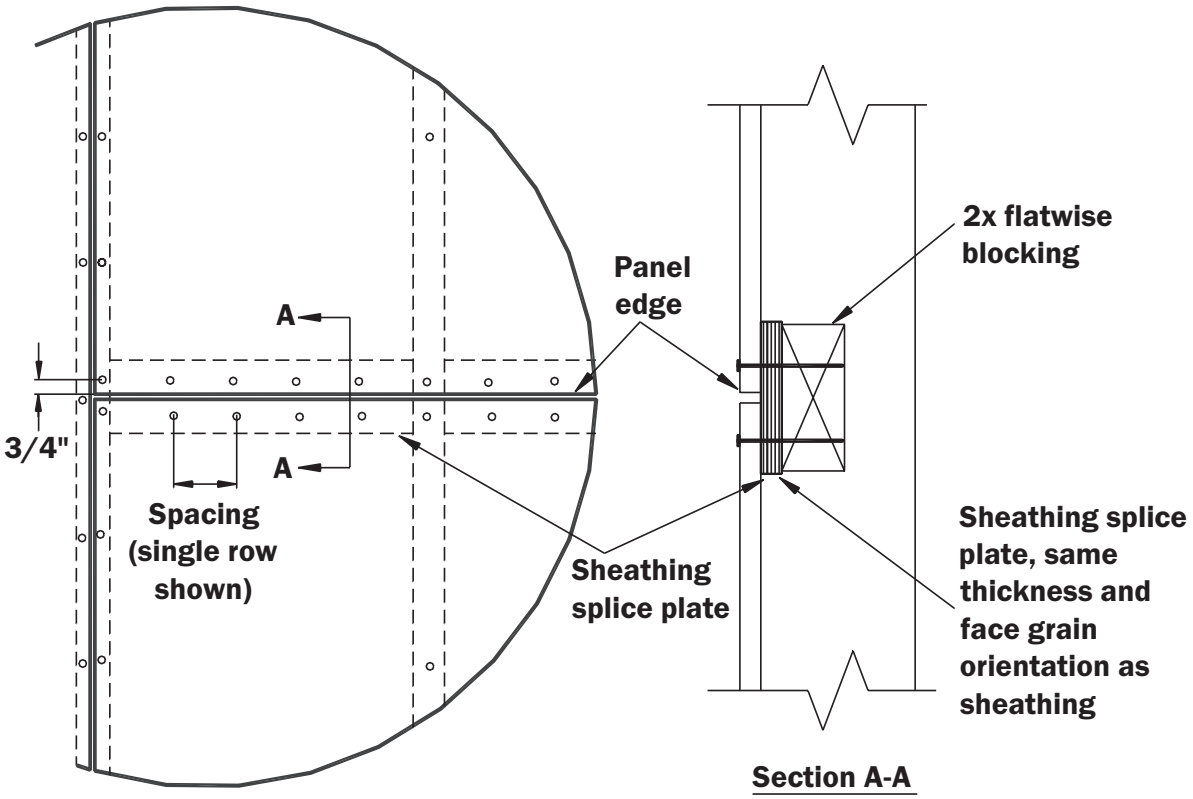

Copyright © American Wood Council. Downloaded/printed pursuant to License Agreement. No reproduction or transfer authorized.

Figure 3.2j Roof to Top Plate Connection Through Sheathing

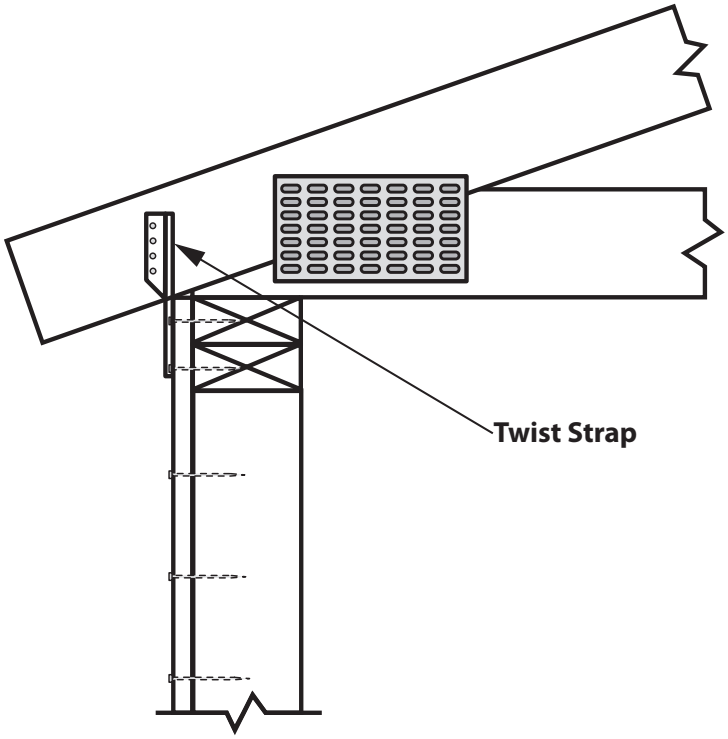

Figure 3.2k Roof to Top Plate Uplift Connection

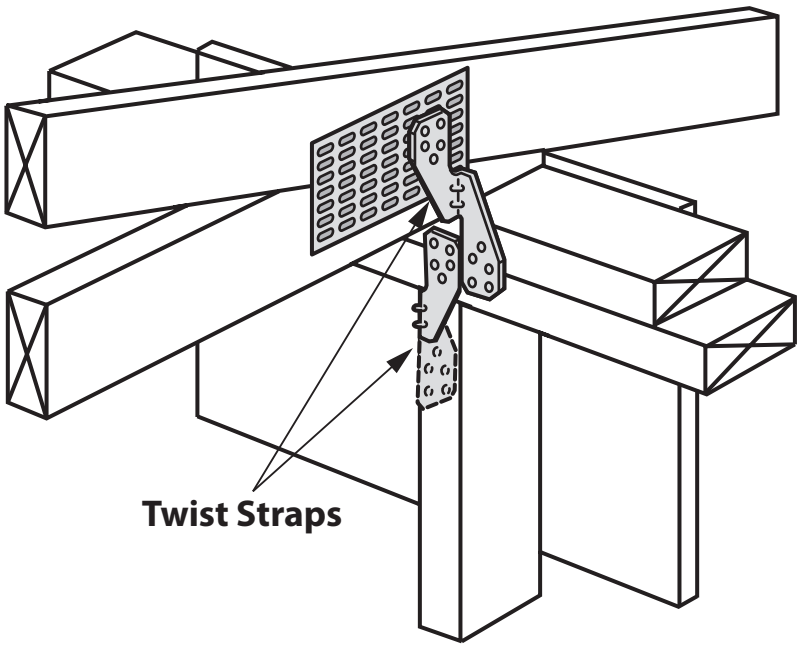

Copyright © American Wood Council. Downloaded/printed pursuant to License Agreement. No reproduction or transfer authorized.

Figure 3.3a Solid Sawn Joist and Rafter Notching and Boring Limits

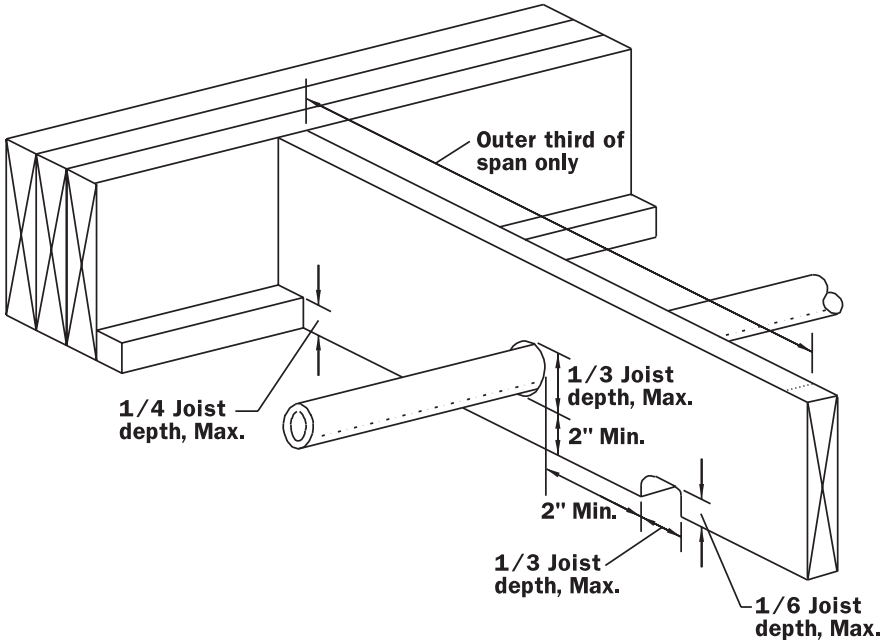

Figure 3.3b Stud Notching and Boring Limits

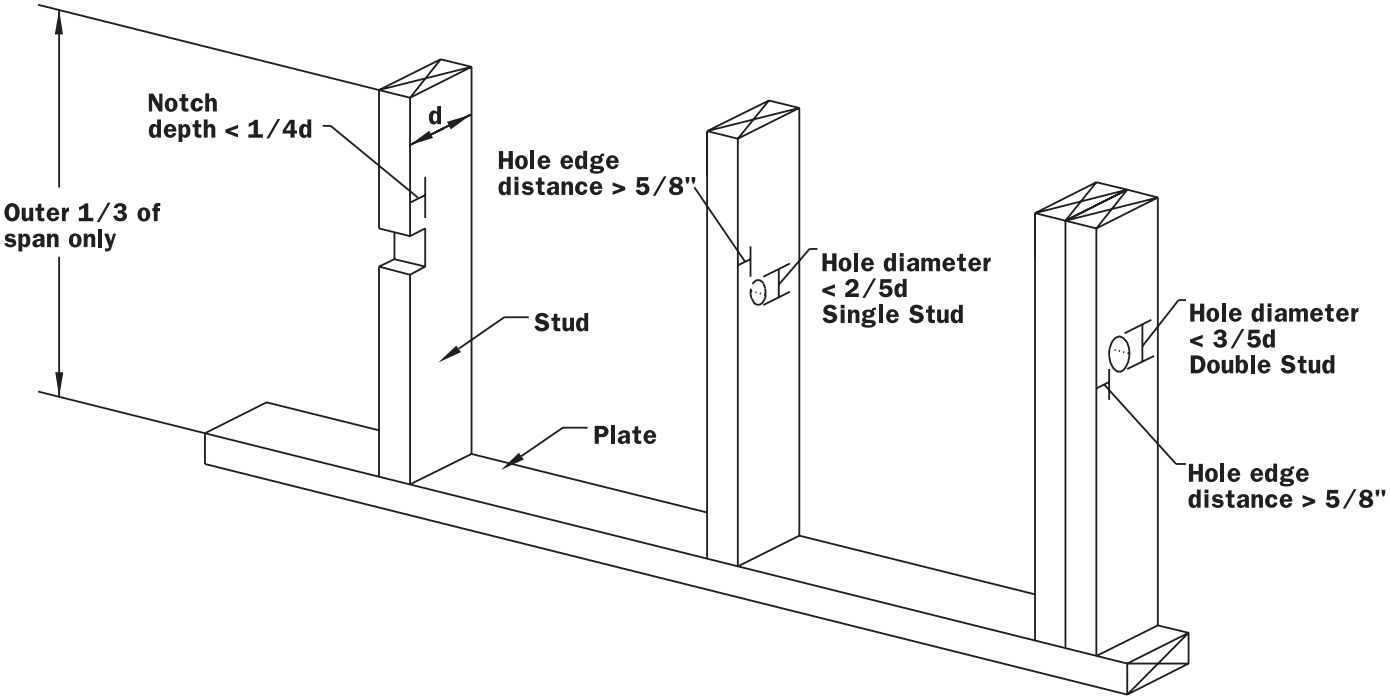

Copyright © American Wood Council. Downloaded/printed pursuant to License Agreement. No reproduction or transfer authorized.

Figure 3.4a Joists Framing on a Solid Sawn Girder

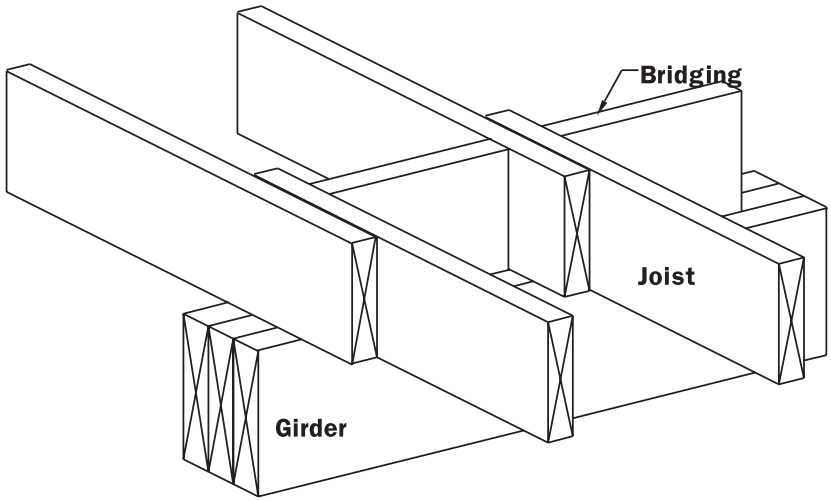

Figure 3.4b Joists Framing on a Ledger

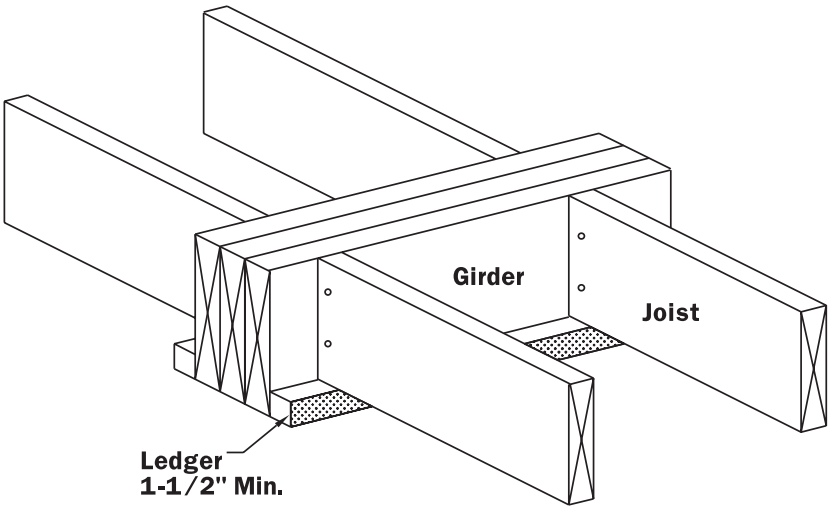

Figure 3.4c Joists Framing on a Steel Beam

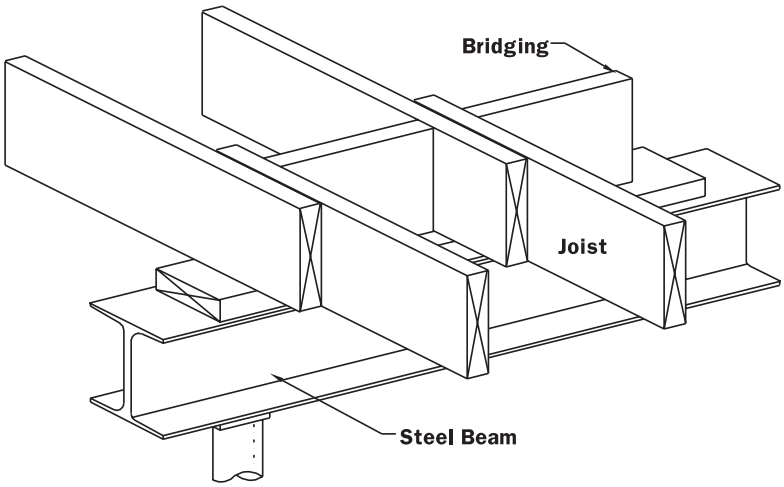

Copyright © American Wood Council. Downloaded/printed pursuant to License Agreement. No reproduction or transfer authorized.
AMERICAN WOOD COUNCIL

Figure 3.4d Joist Framing on a Stud Wall

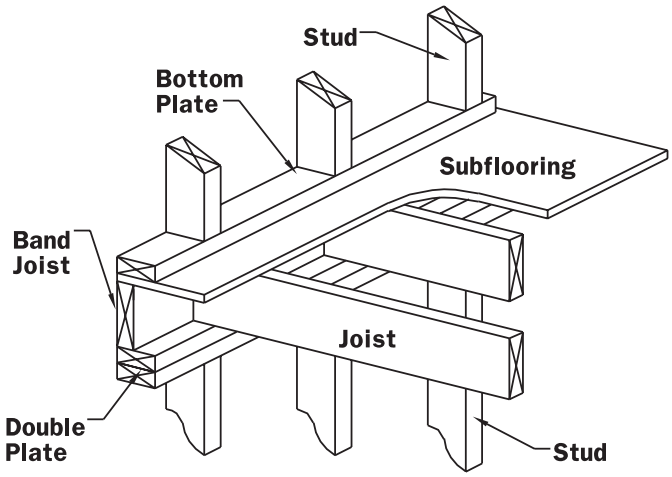

Figure 3.4e Joist Framing on a Foundation Sill Plate

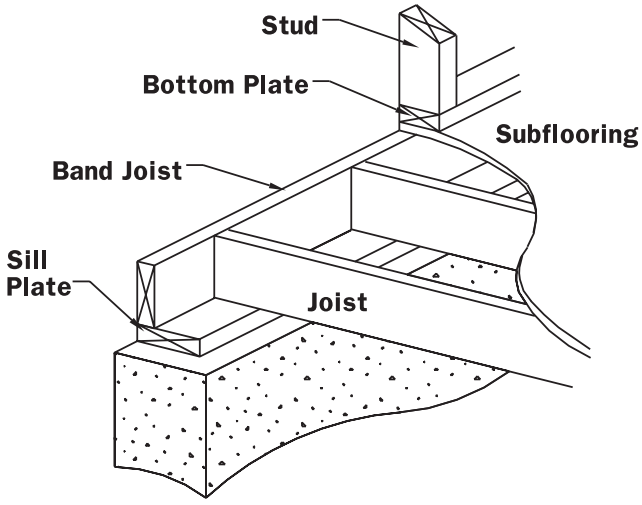

Figure 3.4f Girder Bearing on a Concrete Wall

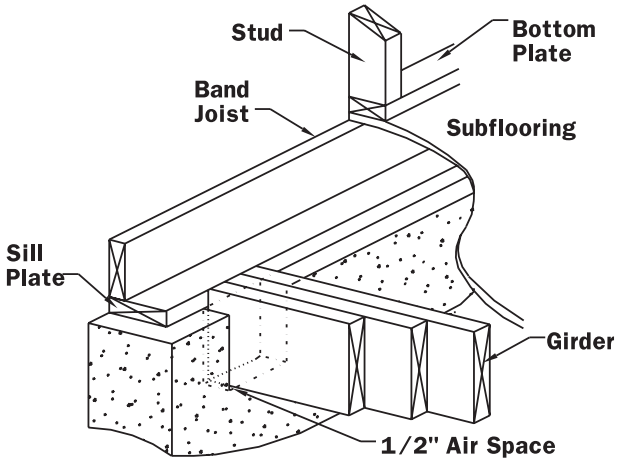

Figure 3.4g Cantilever Floor - 3D View

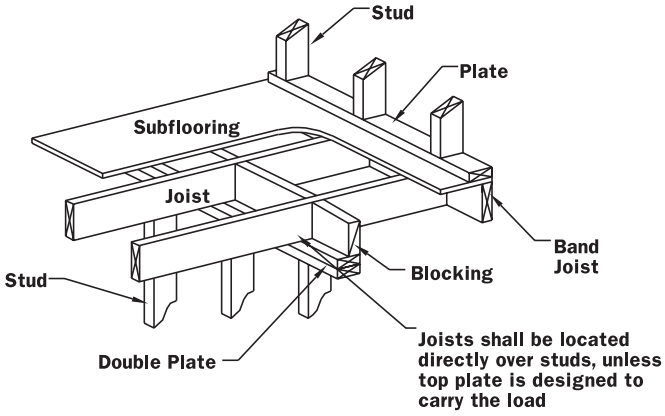

Copyright © American Wood Council. Downloaded/printed pursuant to License Agreement. No reproduction or transfer authorized.

Figure 3.5a Loadbearing Wall Offset from Support

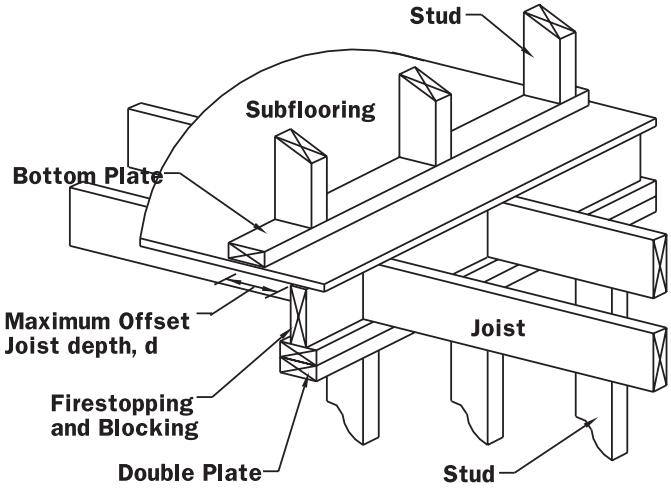

Figure 3.5b Double Joist Under a Non-Loadbearing Wall

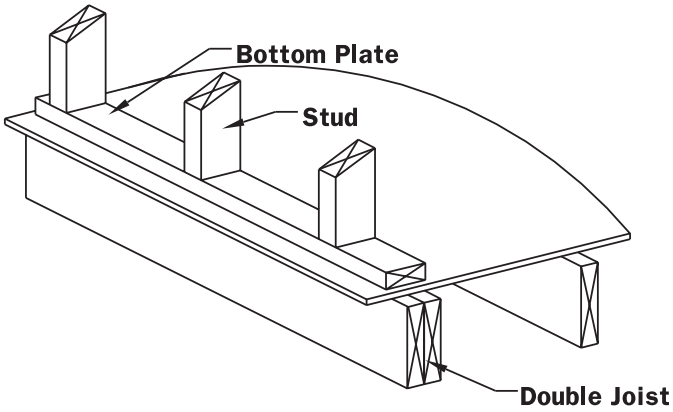

Figure 3.5c Blocking Under a Non-Loadbearing Wall

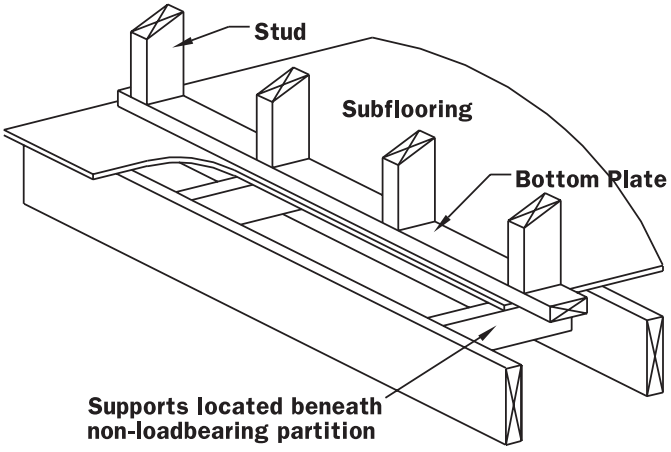

Figure 3.5d Double Joist Under a Bathtub

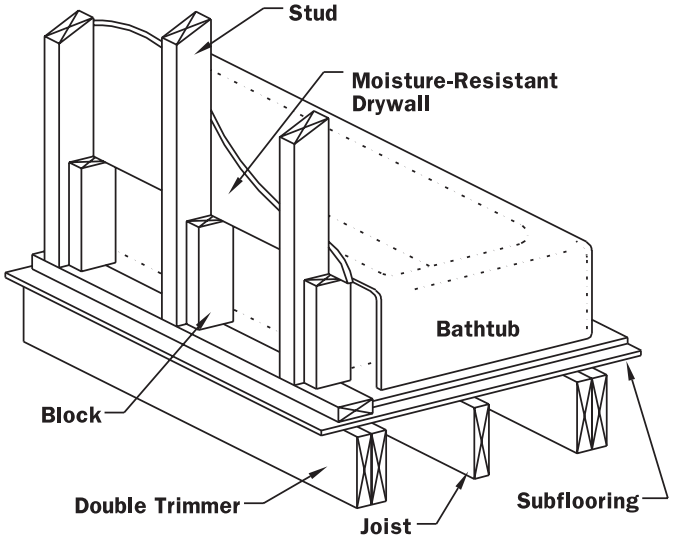

Copyright © American Wood Council. Downloaded/printed pursuant to License Agreement. No reproduction or transfer authorized.

Figure 3.6a Floor Opening - Stairway

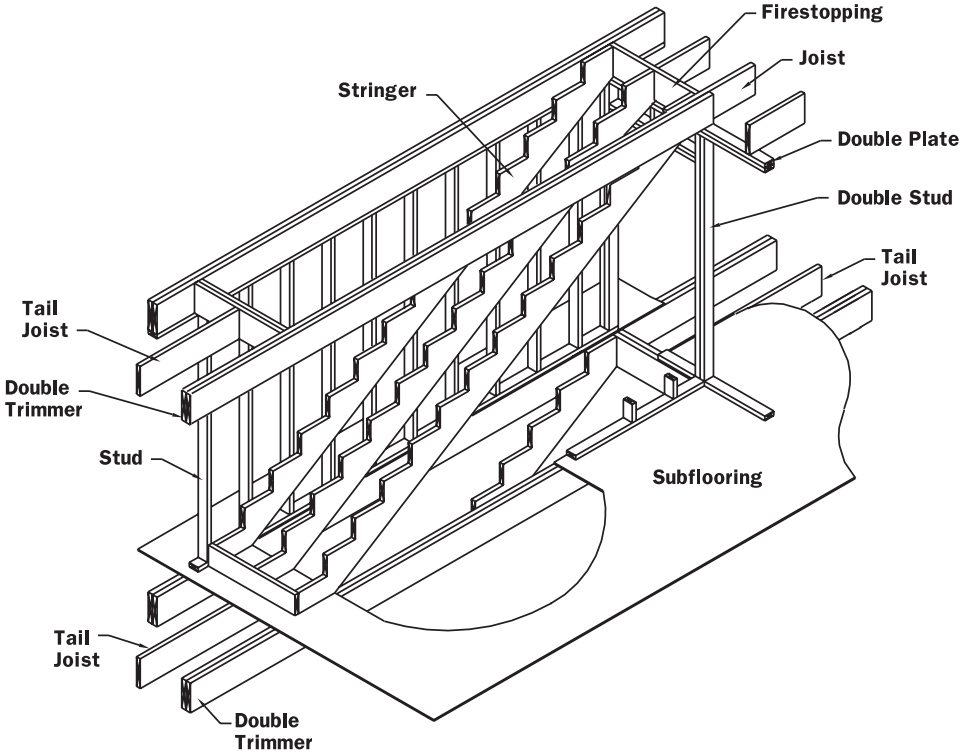

Figure 3.6b Floor Opening - Stairway With Landing

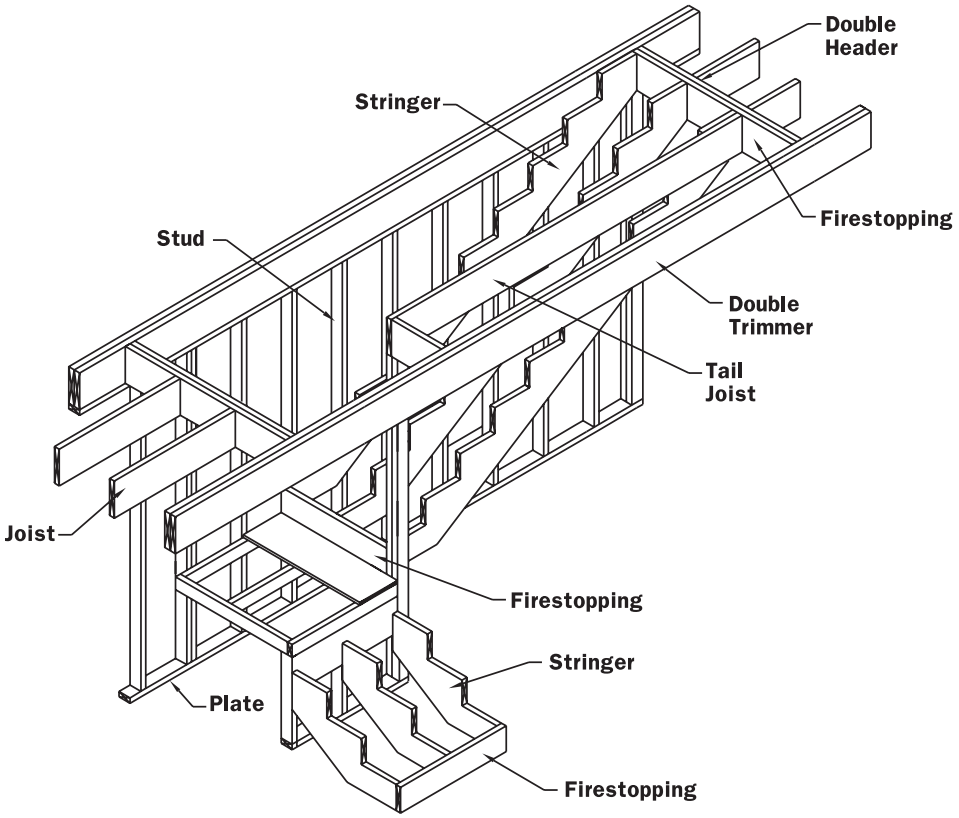

Copyright © American Wood Council. Downloaded/printed pursuant to License Agreement. No reproduction or transfer authorized.
AMERICAN WOOD COUNCIL

Figure 3.7a Ceiling Bracing Gable Endwall

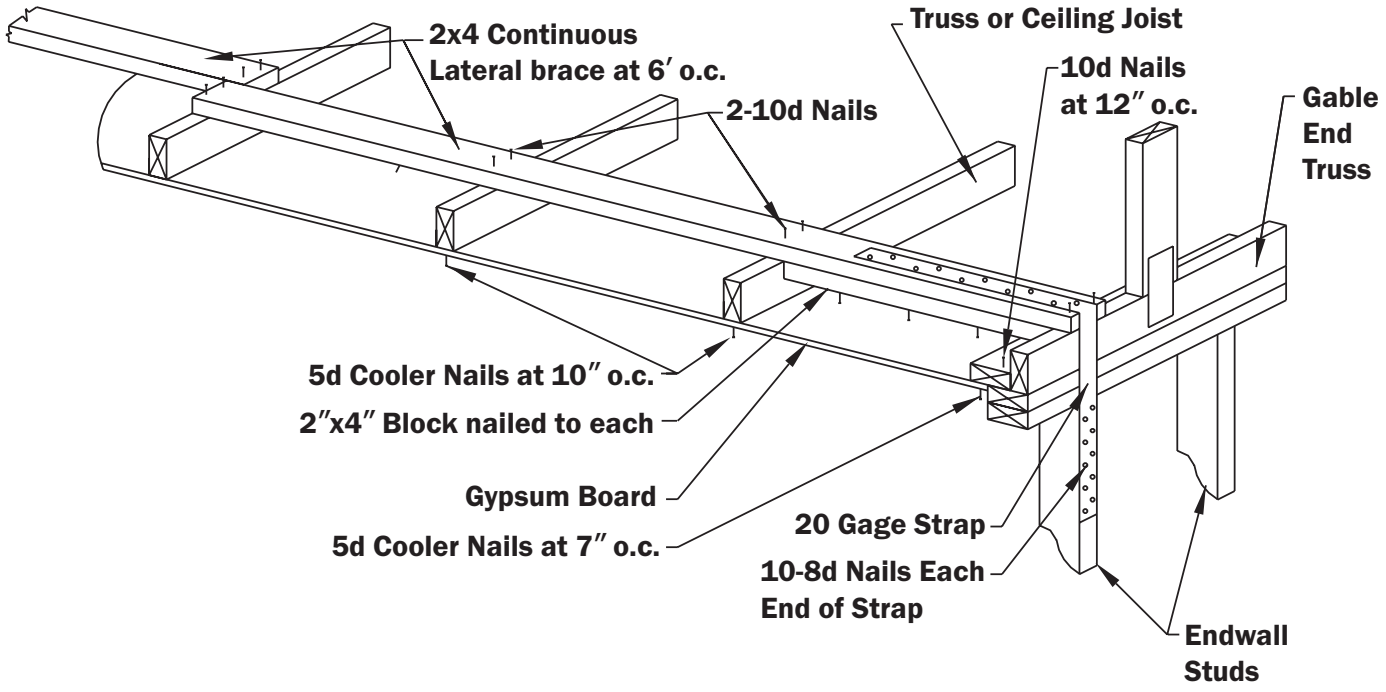

Figure 3.7b Floor Bracing Endwall (Floor or Roof)

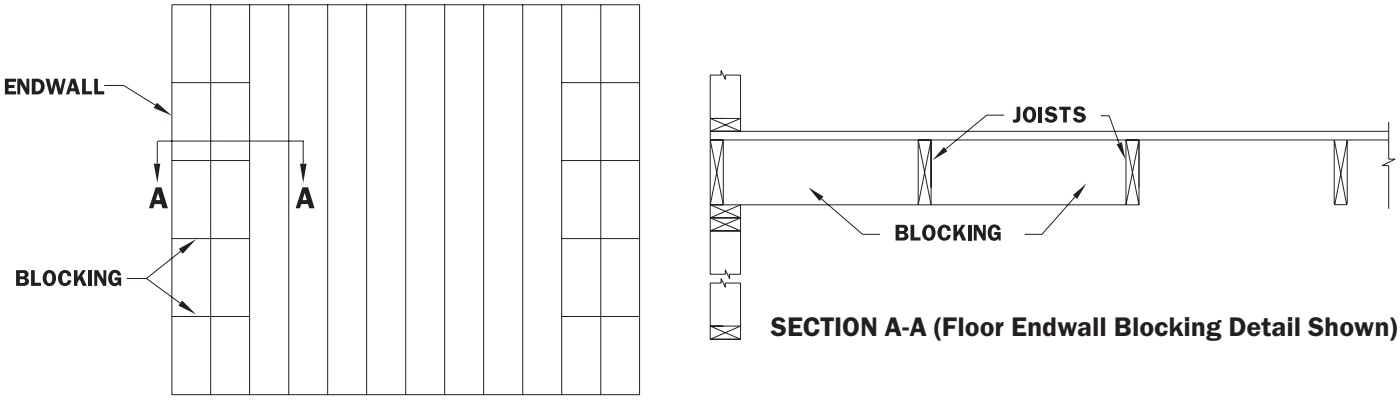

Copyright © American Wood Council. Downloaded/printed pursuant to License Agreement. No reproduction or transfer authorized.

Figure 3.8a Corner Stud Hold-down Detail - 3 Studs With Blocking

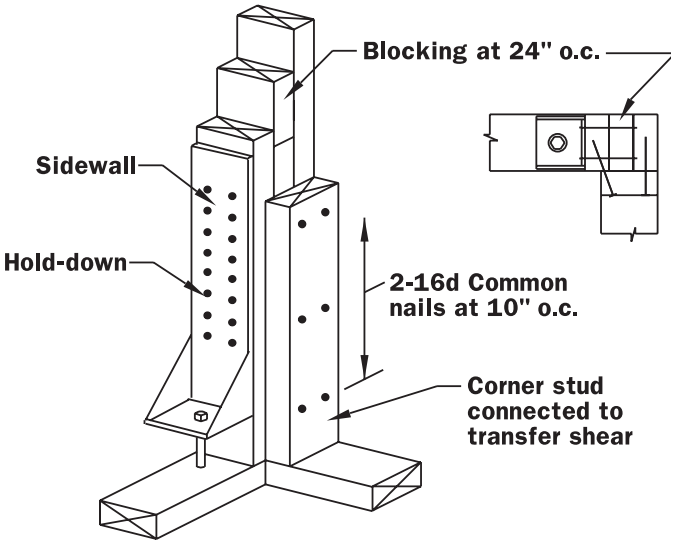

Figure 3.8b Corner Stud Hold-down Detail - 4 Studs

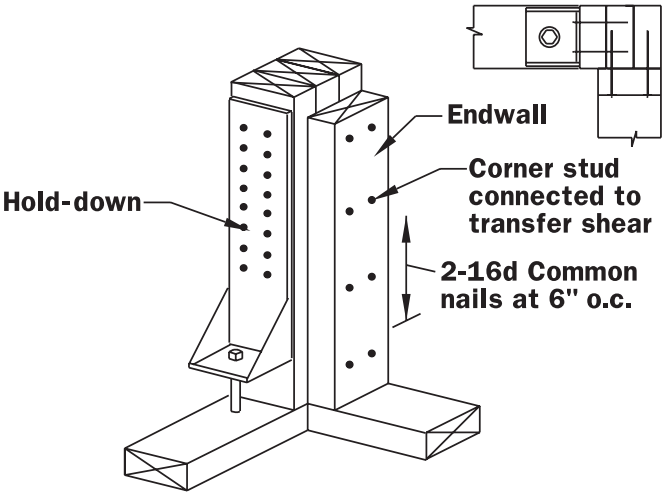

Figure 3.8c Interior Stud Detail

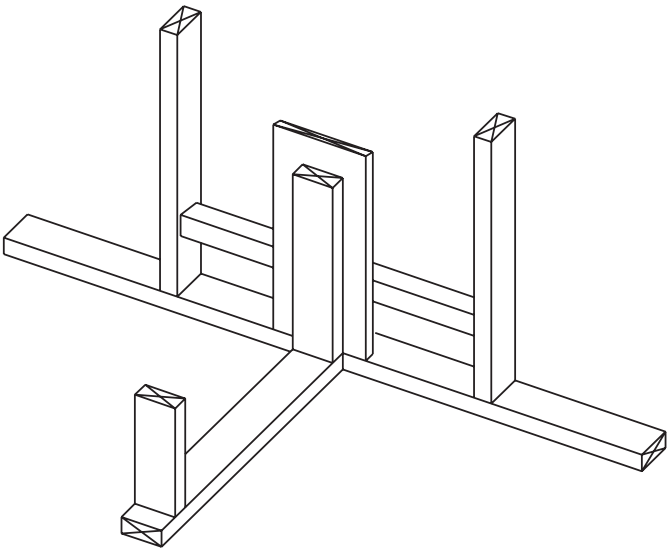

Figure 3.8d Top Plate Intersection Detail

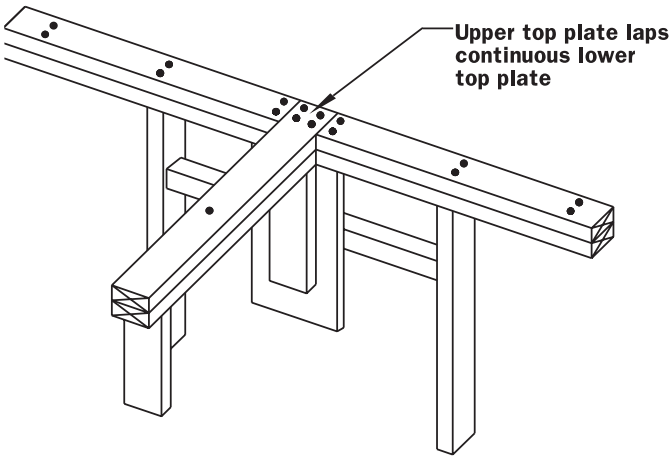

Copyright © American Wood Council. Downloaded/printed pursuant to License Agreement. No reproduction or transfer authorized.
AMERICAN WOOD COUNCIL

Figure 3.9a Studs and Headers Around Wall Openings

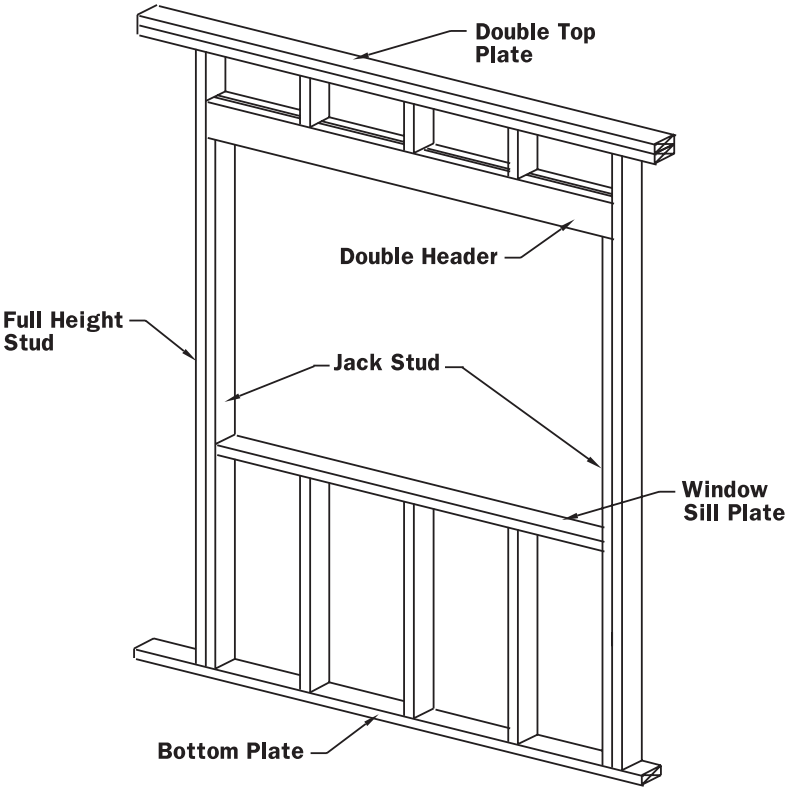

Figure 3.9b Studs and Headers Around Wall Openings - Bay Window

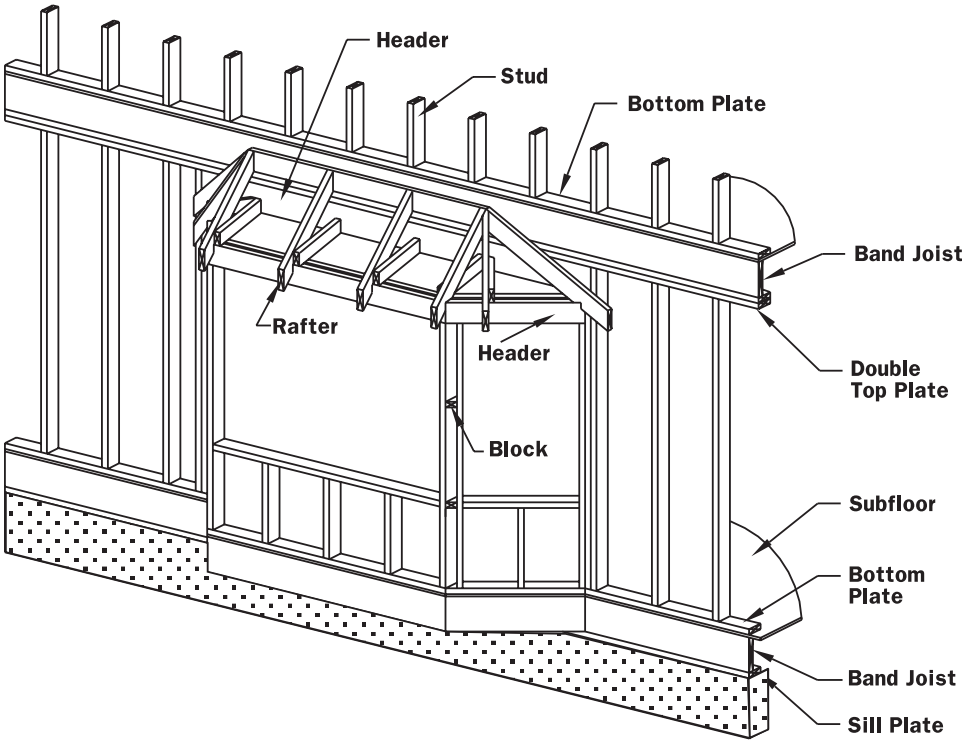

Copyright © American Wood Council. Downloaded/printed pursuant to License Agreement. No reproduction or transfer authorized.

Figure 3.10a Ridge Beam Details

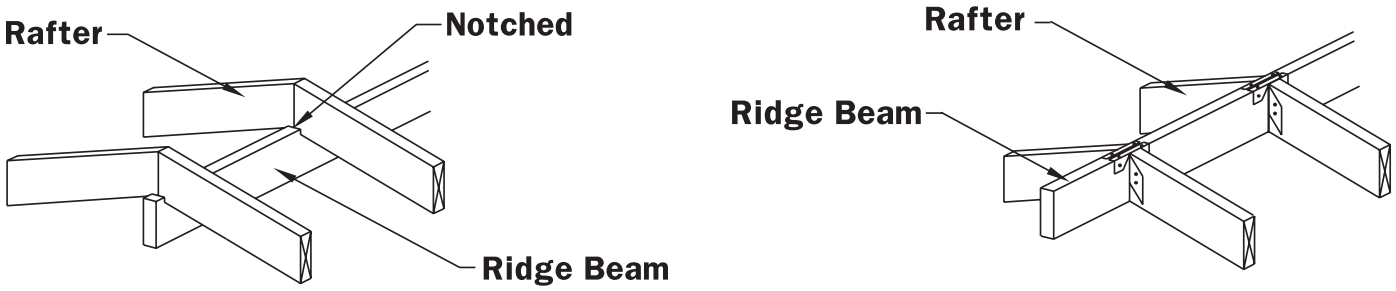

Figure 3.10b Ridge Board and Ceiling Joist Detail

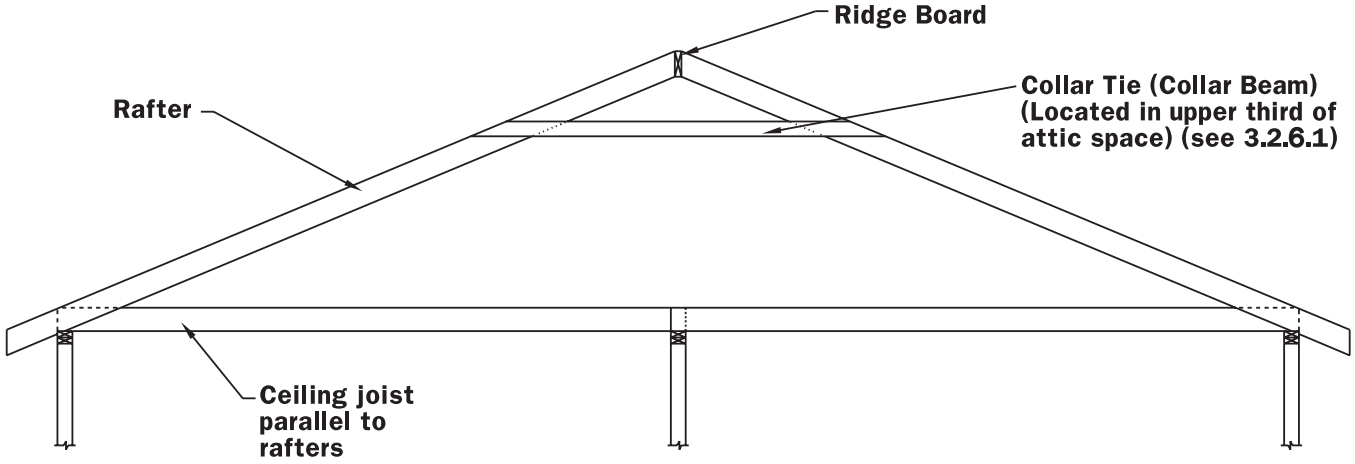

Figure 3.10c Ridge Board and Rafter Tie Detail

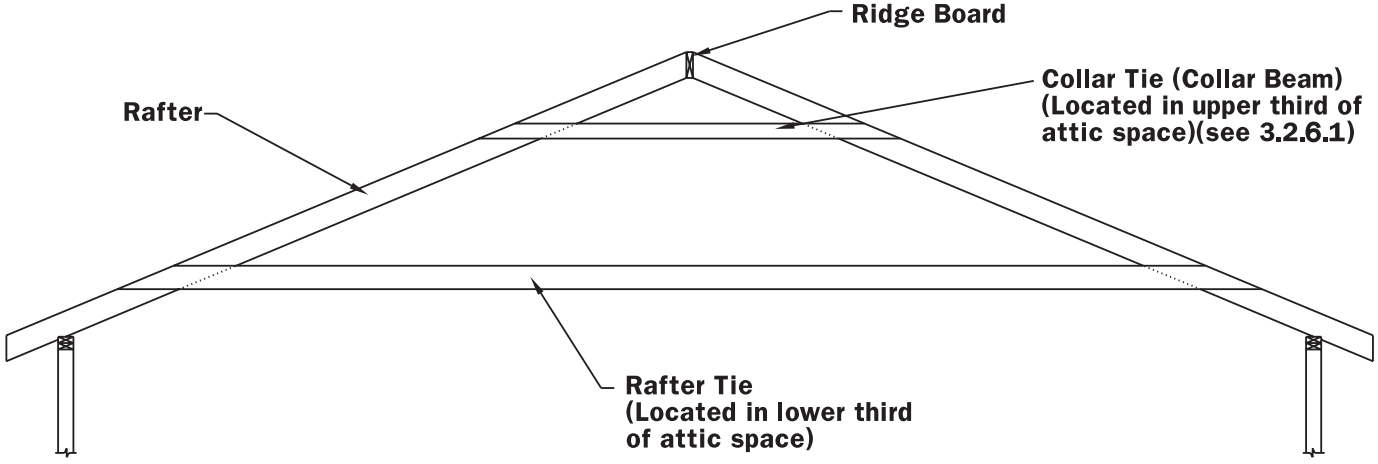

Copyright © American Wood Council. Downloaded/printed pursuant to License Agreement. No reproduction or transfer authorized.
AMERICAN WOOD COUNCIL

Figure 3.11a Roof Openings - Chimney

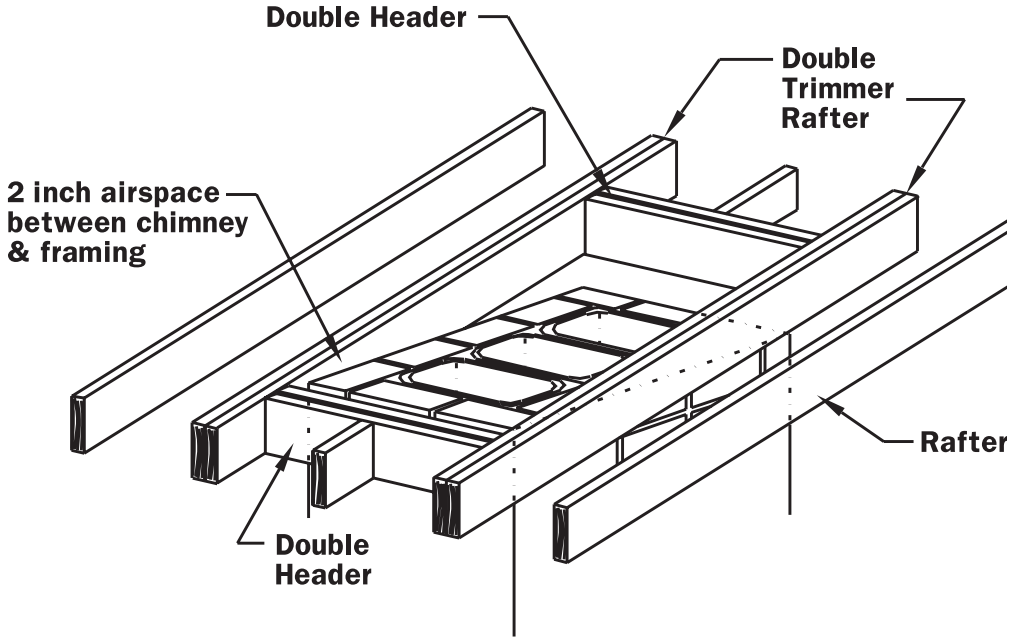

Figure 3.11b Roof Openings - Gable Dormer

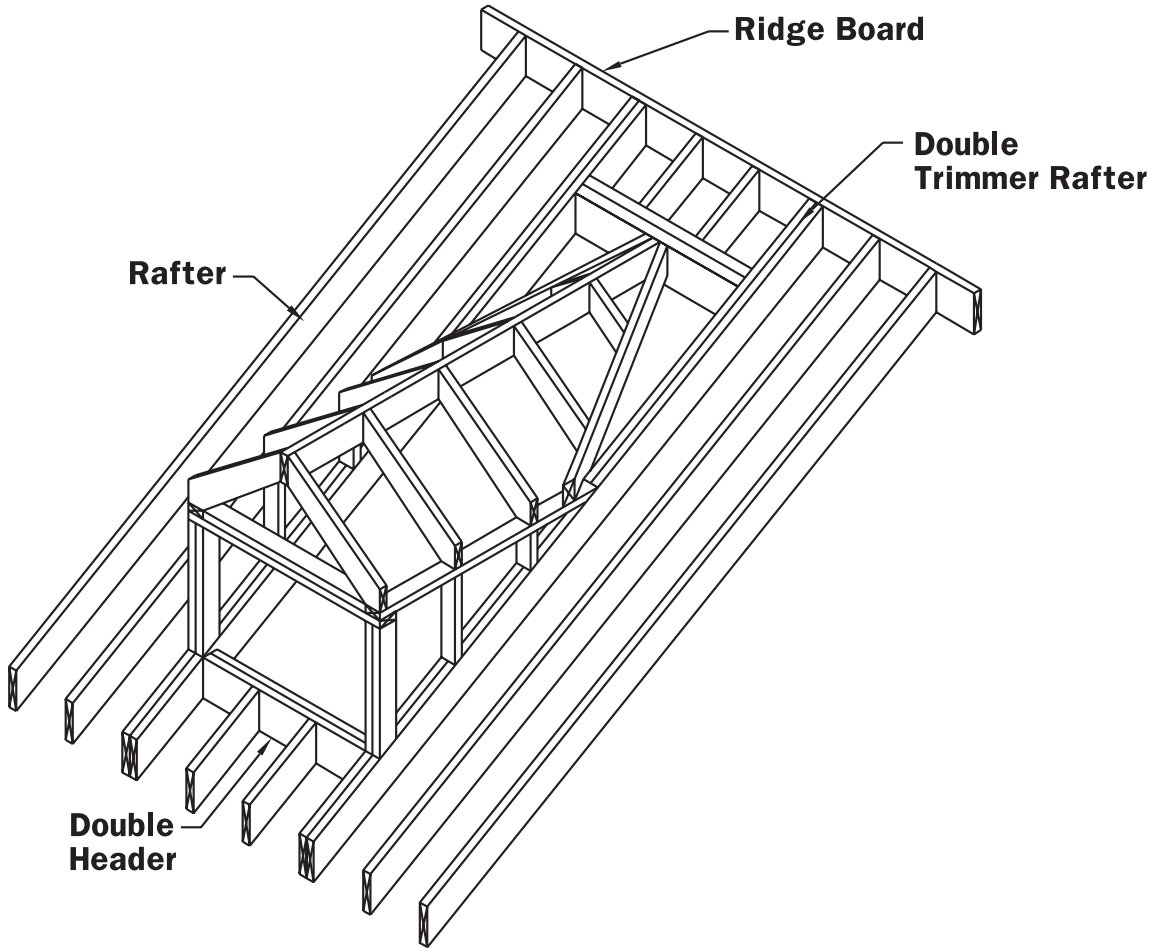

Copyright © American Wood Council. Downloaded/printed pursuant to License Agreement. No reproduction or transfer authorized.

Figure 3.11c Roof Openings - Shed Dormer

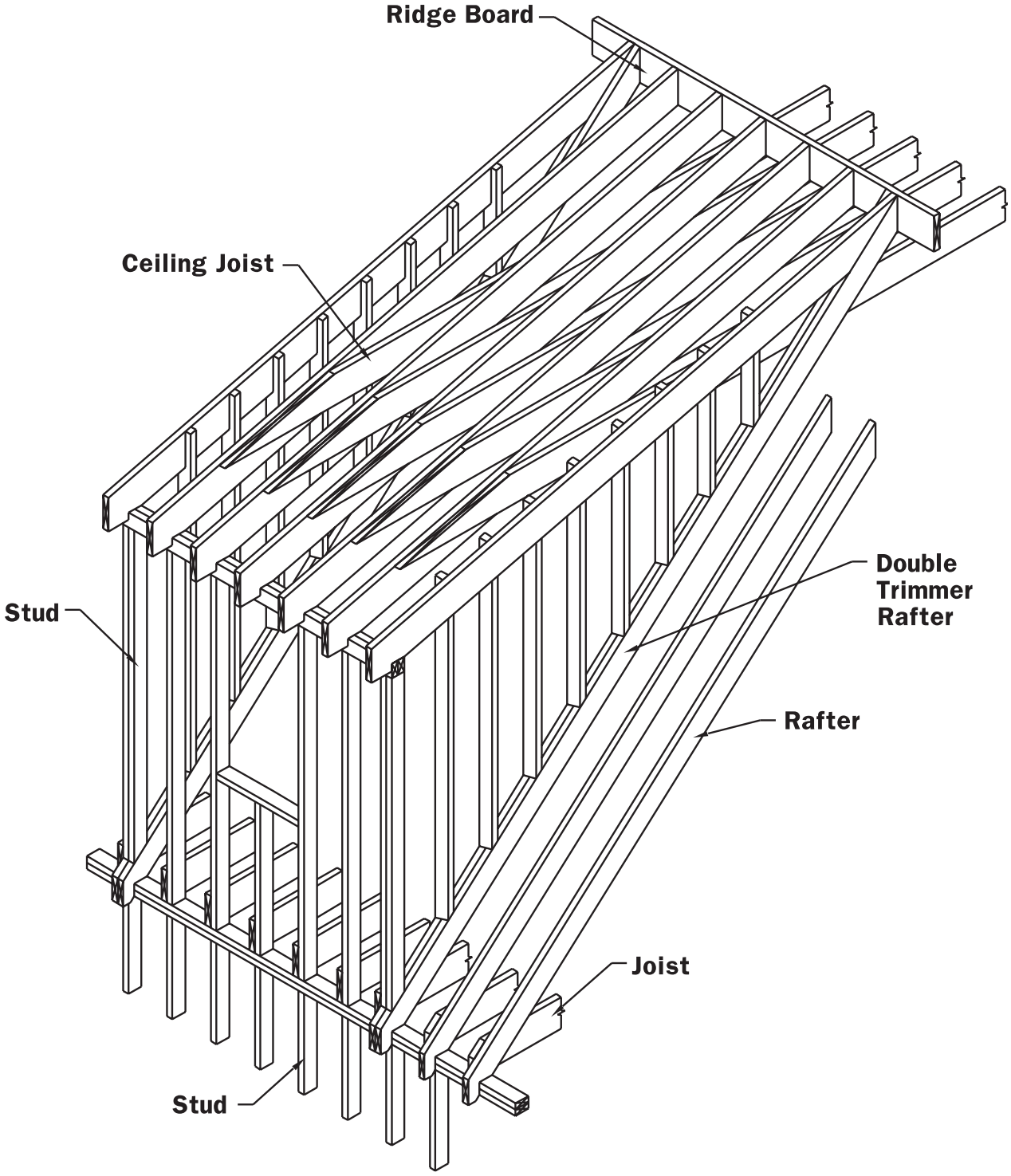

Copyright © American Wood Council. Downloaded/printed pursuant to License Agreement. No reproduction or transfer authorized.
AMERICAN WOOD COUNCIL

Figure 3.12a Hip Roof Framing Detail

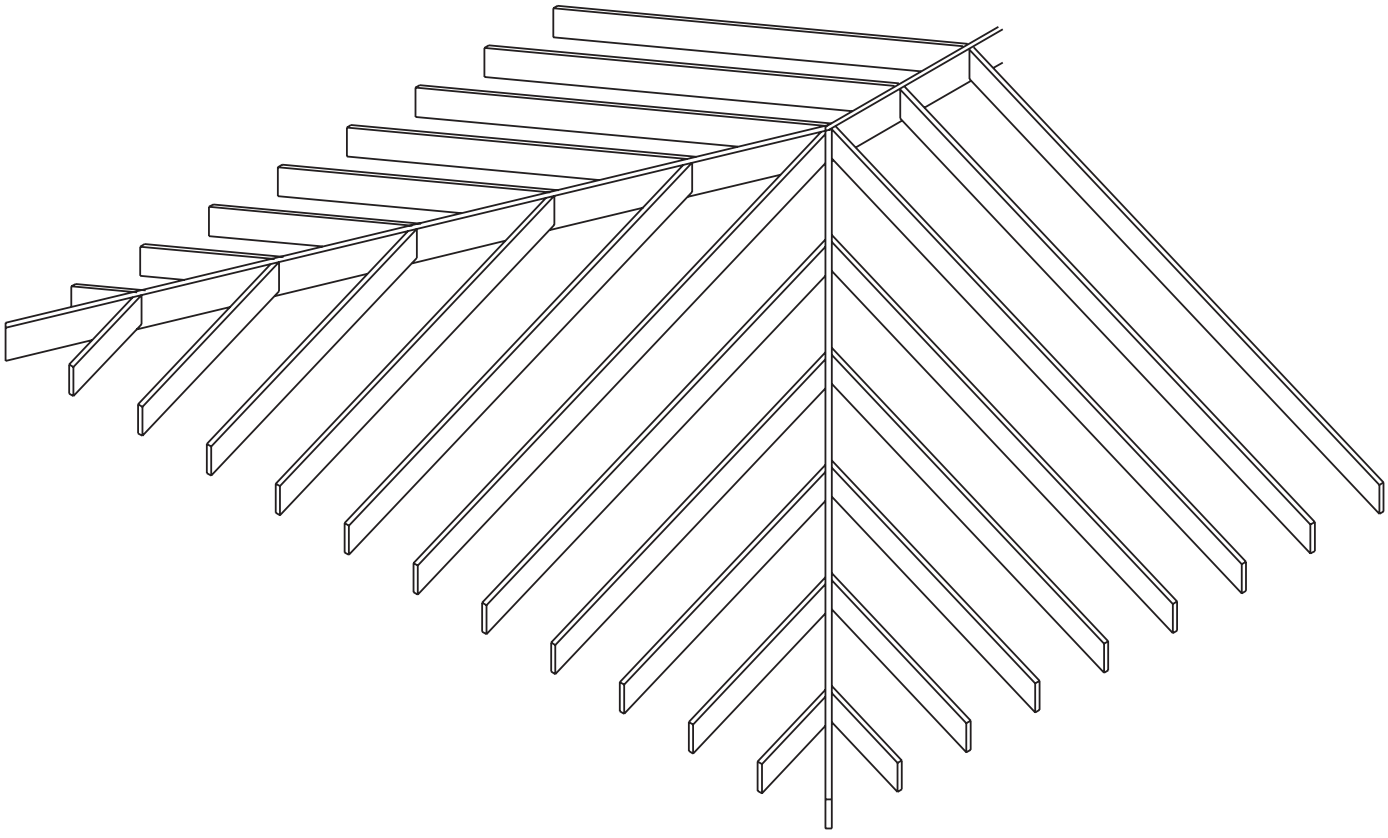

Copyright © American Wood Council. Downloaded/printed pursuant to License Agreement. No reproduction or transfer authorized.

Figure 3.12b Valley Roof Framing Detail

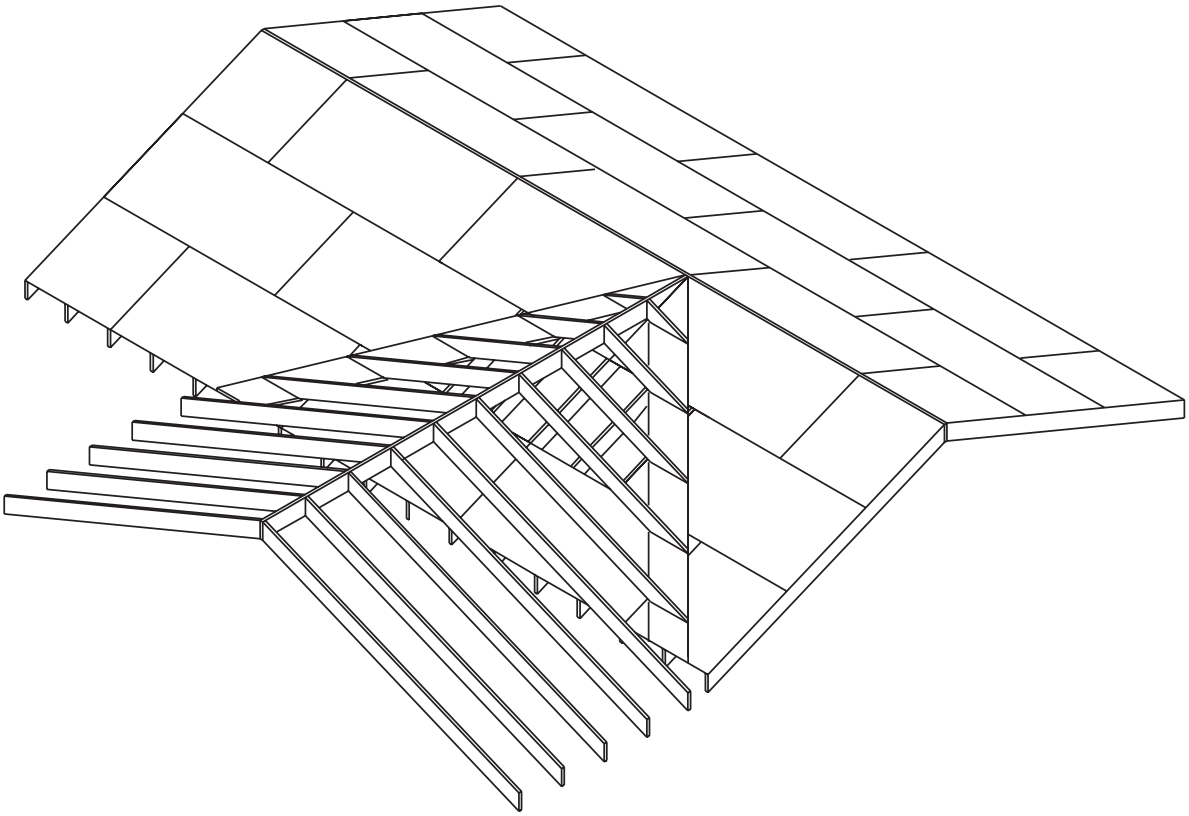

Figure 3.12c Valley Beam Roof Framing Detail

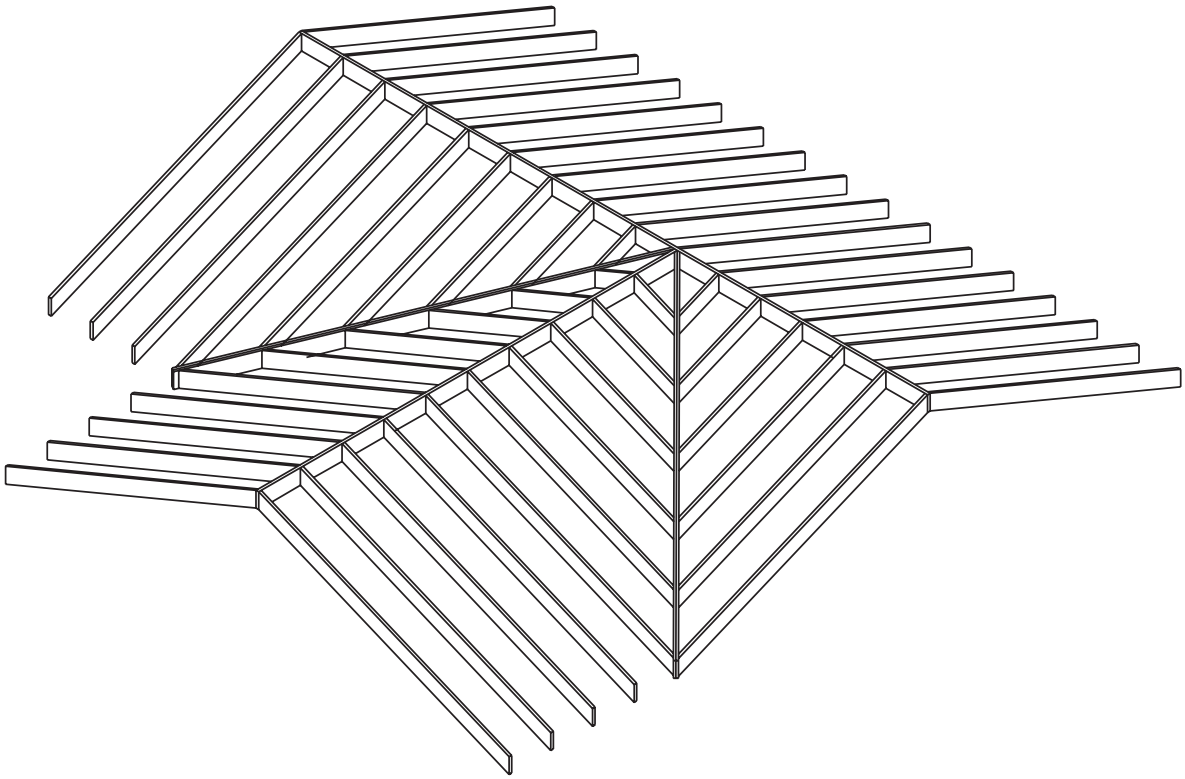

Copyright © American Wood Council. Downloaded/printed pursuant to License Agreement. No reproduction or transfer authorized.

List of Tables

3.1 Nailing Schedule 149

3.2 Sill or Bottom Plate to Foundation Connection Requirements for Wind 150

3.2A Sill Plate to Foundation Connections Resisting Shear Loads from Wind* 157

3.2B Bottom Plate to Foundation Connections (Anchor Bolts) Resisting Lateral and Shear Loads from Wind 160

3.2C Sill or Bottom Plate to Foundation Connections (Anchor Bolts) Resisting Uplift Loads from Wind 160

3.3 Sill Plate to Foundation Connection Shear Load for Seismic 161

3.3A1-6 1/2" Anchor Bolts - Foundation Sill Plate Connection Resisting Shear Loads from Seismic 165

3.3B Bottom Plate to Foundation Connections (Anchor Bolts) Resisting Shear from Seismic 171

3.4 Rafter/Truss Framing to Wall Connection Requirements for Wind Loads 172

3.4A Rafter and/or Ceiling Joist to Top Plate Lateral and Shear Connection Requirements 178

3.4B Shear Walls Resisting Uplift and Shear 179

3.4C Rake Overhang Outlooker Uplift Connection Requirements 181

3.5 Top and Bottom Plate to Stud Lateral Connection Requirements for Wind Loads 183

3.5A Top and Bottom Plate to Stud Lateral Connections for Wind Loads 185

3.6 Ridge Connection Requirements for Wind 187

3.7 Header Connection Requirements for Wind 189

3.8 Window Sill Plate Connection Requirements for Wind 191

3.9 Rafter/Ceiling Joist Heel Joint Connection Requirements 193

3.9A Rafter/Ceiling Joist Heel Joint Connection Requirements 194

3.10 Roof Sheathing Attachment Requirements for Wind Loads 195

3.10A Roof Sheathing Attachment Requirements for Wind Loads 197

3.11 Wall Sheathing and Cladding Attachment Requirements for Wind Loads 199

3.12A Roof Sheathing Requirements for Wind Loads 201

3.12B Maximum Roof Sheathing Spans for Roof Live and Snow Loads 203

3.13A Wall Sheathing Requirements for Wind Loads 204

3.13B Wall Cladding Requirements for Wind Loads 206

3.14 Maximum Floor Sheathing Spans for Live Loads 207

3.15 Minimum Attic Floor/Ceiling Length When Bracing Gable Endwall for Wind Loads 208

3.16A1-4 Roof Diaphragm Limits for Wind 211

3.16B Floor Diaphragm Limits for Wind 215

3.16C1-3 Diaphragm Limits for Seismic 217

3.17A Segmented Shear Wall Sheathing Requirements for Wind 221

3.17C1-3 Segmented Shear Wall Sheathing Requirements for Seismic 224

3.17D Shear Wall Assembly Allowable Unit Shear Capacities, Maximum Shear Wall Segment Aspect Ratios, and Sheathing Type Adjustments 228

3.17E Perforated Shear Wall Full Height Sheathing Adjustments 232

Copyright © American Wood Council. Downloaded/printed pursuant to License Agreement. No reproduction or transfer authorized.

3.17F Segmented and Perforated Shear Wall Hold-down Capacity Requirements..... 233

3.18A-B Floor Joist Spans for Common Lumber Species 234

3.19 Representative Metal Plate Connected Wood Floor Truss Spans 236

3.20A Maximum Exterior Loadbearing and Non Loadbearing Stud Lengths for Common Lumber Species Resisting Interior Zone Wind Loads - Minimum Sheathing Material 238

3.20B Maximum Exterior Loadbearing and Non Loadbearing Stud Lengths for Common Lumber Species Resisting Interior Zone Wind Loads - 3/8" Wood Structural Panel Sheathing 257

3.20C Size, Height, and Spacing Limits for Wood Studs..... 275

3.21 Top Plate Requirements for Wind Exposures B & C 276

3.22A Header Spans for Exterior Loadbearing Walls (Supporting Roof and Ceiling) 278

3.22B Header Spans for Exterior Loadbearing Walls (Supporting a Roof, Ceiling, and One Center Bearing Floor) 280

3.22C Header Spans for Exterior Loadbearing Walls (Supporting a Roof, Ceiling, and One Clear Span Floor)..... 282

3.22D Header Spans for Exterior Loadbearing Walls (Supporting a Roof, Ceiling, and Two Center Bearing Floors) 2846

3.22E Header Spans for Exterior Loadbearing Walls (Supporting a Roof, Ceiling, and Two Clear Span Floors)..... 286

3.22F Jack Stud Requirements for Headers in Exterior Loadbearing Walls 288

3.23A Laterally Unsupported (Dropped) Header Spans for Exterior Loadbearing Walls Resisting Wind Loads..... 289

3.23B Laterally Unsupported (Dropped) Header Spans for Exterior Non-Loadbearing Walls and Window Sill Plate Spans Resisting Wind Loads..... 291

3.23C Full Height Stud Requirements for Headers or Window Sill Plates in Exterior Walls Resisting Wind Loads..... 292

3.23D Reduced Full Height Stud Requirements for Headers or Window Sill Plates in Exterior Walls Resisting Wind Loads..... 293

3.24A Header Spans for Interior Loadbearing Walls (Supporting One Center Bearing Floor) 294

3.24B Header Spans for Interior Loadbearing Walls (Supporting Two Center Bearing Floors)..... 296

3.24C Jack Stud Requirements for Headers in Interior Loadbearing Walls 298

3.25 Ceiling Joist Spans for Common Lumber Species 299

3.26A-L Rafter Spans for Common Lumber Species 303

3.26M Rafter Deflection Limit = L/180..... 317

3.27 Representative Metal Plate Connected Wood Roof Truss Spans 328

3.28 Hip and Valley Beam Sizes 329

3.29 Ridge Beam Spans 330

Copyright © American Wood Council. Downloaded/printed pursuant to License Agreement. No reproduction or transfer authorized.
AMERICAN WOOD COUNCIL

Copyright © American Wood Council. Downloaded/printed pursuant to License Agreement. No reproduction or transfer authorized.
AMERICAN WOOD COUNCIL

Table 3.1 Nailing Schedule

Joint Description	Number of Common Nails	Number of Box Nails	Nail Spacing
ROOF FRAMING			
Rafter to Top Plate (Toe-nailed)	(see Table 3.4A)	(see Table 3.4A)	per rafter
Ceiling Joist to Top Plate (Toe-nailed)	(see Table 3.4A)	(see Table 3.4A)	per joist
Ceiling Joist to Parallel Rafter (Face-nailed)	(see Table 3.9A)	(see Table 3.9A)	each lap
Ceiling Joist Laps over Partitions (Face-nailed)	(see Table 3.9A)	(see Table 3.9A)	each lap
Collar Tie to Rafter (Face-nailed)	(see Table 3.6)	(see Table 3.6)	per tie
Blocking to Rafter (Toe-nailed)	2- 8d	2-10d	each end
Rim Board to Rafter (End-nailed)	2-16d	3-16d	each end
WALL FRAMING			
Top Plate to Top Plate (Face-nailed)	2-16d[1]	2-16d[1]	per foot
Top Plates at Intersections (Face-nailed)	4-16d	5-16d	joints - each side
Stud to Stud (Face-nailed)	2-16d	2-16d	24" o.c.
Header to Header (Face-nailed)	16d	16d	16" o.c. along edges
Top or Bottom Plate to Stud (End-nailed)	(see Table 3.5A)	(see Table 3.5A)	per stud
Bottom Plate to Floor joist, Bandjoist, Endjoist or Blocking (Face-nailed)	2-16d[1,2]	2-16d[1,2]	per foot
FLOOR FRAMING			
Joist to Sill, Top Plate or Girder (Toe-nailed)	4- 8d	4-10d	per joist
Bridging to Joist (Toe-nailed)	2- 8d	2-10d	each end
Blocking to Joist (Toe-nailed)	2- 8d	2-10d	each end
Blocking to Sill or Top Plate (Toe-nailed)	3-16d	4-16d	each block
Ledger Strip to Beam (Face-nailed)	3-16d	4-16d	each joist
Joist on Ledger to Beam (Toe-nailed)	3- 8d	3-10d	per joist
Band Joist to Joist (End-nailed)	3-16d	4-16d	per joist
Band Joist to Sill or Top Plate (Toe-nailed)	2-16d[1]	3-16d	per foot
ROOF SHEATHING			
Wood Structural Panels	8d	10d	(see Table 3.10)
Diagonal Board Sheathing			
1"x6" or 1"x8"	2-8d	2-10d	per support
1"x10" or wider	3-8d	3-10d	per support
CEILING SHEATHING			
Gypsum Wallboard	5d coolers	5d coolers	7" edge / 10" field
WALL SHEATHING			
Wood Structural Panels	8d	10d	(see Table 3.11)
Structural Fiberboard Panels			
1/2"	11 ga. galv. roofing nail (0.120"x1-1/2"long x 7/16" head)	-	3" edge / 6" field
25/32"	11 ga. galv. roofing nail (0.120"x1-3/4"long x 3/8" head)	-	3" edge / 6" field
Gypsum Wallboard	5d coolers	5d coolers	7" edge / 10" field
Hardboard	8d	8d	(see Table 3.11)
Particleboard Panels	8d	8d	(see manufacturer)
Diagonal Board Sheathing			
1"x6" or 1"x8"	2-8d	2-10d	per support
1"x10" or wider	3-8d	3-10d	per support
FLOOR SHEATHING			
Wood Structural Panels			
1" or less	8d	10d	6" edge / 12" field
greater than 1"	10d	16d	6" edge / 12" field
Diagonal Board Sheathing			
1"x6" or 1"x8"	2-8d	2-10d	per support
1"x10" or wider	3-8d	3-10d	per support

1 Nailing requirements are based on wall sheathing nailed 6 inches on-center at the panel edge. Alternative nailing schedules shall be used where wall sheathing nailing is reduced. For example, if wall sheathing is nailed 3 inches on-center at the panel edge to obtain higher shear capacities, nailing requirements for structural members shall be doubled, or alternate connectors shall be used to maintain the load path.

2 When wall sheathing is continuous over connected members, the tabulated number of nails shall be permitted to be reduced to 1-16d nail per foot.

Copyright © American Wood Council. Downloaded/printed pursuant to License Agreement. No reproduction or transfer authorized.

Table 3.2 Sill or Bottom Plate to Foundation Connection Requirements for Wind

Exposure B

Dead Load Assumptions: Roof/Ceiling Assembly DL = 15 psf, Wall DL = 121 plf

Wind Speed 3-second gust (mph) (See Figure 1.1)			90			95			100			105		
Connections	Foundation Supporting	Roof Span (ft)	Required Capacity of Connection (plf)[1,2,3,4]											
			U	L	S	U	L	S	U	L	S	U	L	S
Sill Plate to Foundation (Crawl Space or Basement)	Roof & 1 Floor	12	-	*	101R	-	*	103R	-	*	111R	-	*	122R
		16	-			-			-			-		
		20	-			-			-			-		
		24	-			-			-			-		
		28	-			-			-			-		
		32	-			-			-			-		
		36	-			-			-			-		
	Roof & 2 Floors	20	-	*	154R	-	*	156R	-	*	167R	-	*	184R
		24	-			-			-			-		
		28	-			-			-			-		
		32	-			-			-			-		
		36	-			-			-			-		
	Roof & 3 Floors	28	-	*	207R	-	*	209R	-	*	223R	-	*	246R
		32	-			-			-			-		
		36	-			-			-			-		
Wall Bottom Plate to Foundation (Slab-on-Grade)	Roof	12	-	53	436 [3]	-	59	436 [3]	-	66	436 [3]	-	72	436 [3]
		16	-			-			-			-		
		20	-			-			-			-		
		24	-			-			-			-		
		28	-			-			-			-		
		32	-			-			-			-		
		36	-			-			-			-		
	Roof & 1 Floor	20	-	53	436 [3]	-	59	436 [3]	-	66	436 [3]	-	72	436 [3]
		24	-			-			-			-		
		28	-			-			-			-		
		32	-			-			-			-		
		36	-			-			-			-		
	Roof & 2 Floors	28	-	53	436 [3]	-	59	436 [3]	-	66	436 [3]	-	72	436 [3]
		32	-			-			-			-		
		36	-			-			-			-		

U = Connector uplift load.
L = Connector lateral load (perpendicular to the wall).
S = Connector shear load (parallel to the wall).
R = L/W for wind perpendicular to the ridge and W/L for wind parallel to the ridge, where W is the building width and L is the building length.

* Anchorage required to resist lateral loads shall be determined in the foundation design per Section 1.1.4.

See footnotes 1-4.

Copyright © American Wood Council. Downloaded/printed pursuant to License Agreement. No reproduction or transfer authorized.

Table 3.2 Sill or Bottom Plate to Foundation Connection Requirements for Wind (Cont.) — Exposure B

Dead Load Assumptions: Roof/Ceiling Assembly DL = 15 psf, Wall DL = 121 plf

Wind Speed 3-second gust (mph) (See Figure 1.1)			110			115			120			130			140		
Connections	Foundation Supporting	Roof Span (ft)	Required Capacity of Connection (plf)[1,2,3,4]														
			U	L	S	U	L	S	U	L	S	U	L	S	U	L	S
Sill Plate to Foundation (Crawl Space or Basement)	Roof & 1 Floor	12	-	*	134R	-	*	147R	-	*	160R	23	*	188R	49	*	218R
		16	-			-			10			40			73		
		20	-			6			23			58			96		
		24	-			16			35			76			120		
		28	6			27			48			94			144		
		32	14			37			61			112			168		
		36	22			47			74			131			192		
	Roof & 2 Floors	20	-	*	202R	-	*	221R	-	*	240R	-	*	282R	24	*	327R
		24	-			-			-			4			47		
		28	-			-			-			22			71		
		32	-			-			-			40			95		
		36	-			-			1			58			119		
	Roof & 3 Floors	28	-	*	270R	-	*	295R	-	*	321R	-	*	376R	-	*	437R
		32	-			-			-			-			23		
		36	-			-			-			-			47		
Wall Bottom Plate to Foundation (Slab-on-Grade)	Roof	12	-	79	436 [3]	-	87	436 [3]	-	94	436 [3]	23	111	436 [3]	49	129	436 [3]
		16	-			-			10			40			73		
		20	-			6			23			58			96		
		24	-			16			35			76			120		
		28	6			27			48			94			144		
		32	14			37			61			112			168		
		36	22			47			74			131			192		
	Roof & 1 Floor	20	-	79	436 [3]	-	87	436 [3]	-	94	436 [3]	-	111	436 [3]	24	129	436 [3]
		24	-			-			-			4			47		
		28	-			-			-			22			71		
		32	-			-			-			40			95		
		36	-			-			1			58			119		
	Roof & 2 Floors	28	-	79	436 [3]	-	87	436 [3]	-	94	436 [3]	-	111	436 [3]	-	129	436 [3]
		32	-			-			-			-			23		
		36	-			-			-			-			47		

U = Connector uplift load.
L = Connector lateral load (perpendicular to the wall).
S = Connector shear load (parallel to the wall).
R = L/W for wind perpendicular to the ridge and W/L for wind parallel to the ridge, where W is the building width and L is the building length.

* Anchorage required to resist lateral loads shall be determined in the foundation design per Section 1.1.4.

See footnotes 1-4.

Copyright © American Wood Council. Downloaded/printed pursuant to License Agreement. No reproduction or transfer authorized.
AMERICAN WOOD COUNCIL

Table 3.2 Sill or Bottom Plate to Foundation Connection Requirements for Wind (Cont.)

Exposure B

Dead Load Assumptions: Roof/Ceiling Assembly DL = 15 psf, Wall DL = 121 plf

Wind Speed 3-second gust (mph) (See Figure 1.1)			150			160			170			180			195		
Connections	Foundation Supporting	Roof Span (ft)	Required Capacity of Connection (plf)[1,2,3,4]														
			U	L	S	U	L	S	U	L	S	U	L	S	U	L	S
Sill Plate to Foundation (Crawl Space or Basement)	Roof & 1 Floor	12	78	*	250R	109	*	284R	141	*	321R	176	*	360R	231	*	422R
		16	107			145			184			226			294		
		20	137			181			228			277			356		
		24	167			218			271			328			419		
		28	197			254			315			379			483		
		32	227			291			359			431			546		
		36	258			328			403			482			610		
	Roof & 2 Floors	20	65	*	376R	108	*	427R	155	*	482R	204	*	541R	284	*	635R
		24	95			145			199			255			347		
		28	125			182			242			307			410		
		32	155			218			286			358			473		
		36	185			255			330			409			537		
	Roof & 3 Floors	28	52	*	501R	109	*	570R	170	*	644R	234	*	722R	338	*	847R
		32	82			146			214			285			401		
		36	112			183			257			337			464		
Wall Bottom Plate to Foundation (Slab-on-Grade)	Roof	12	78	148	436 [3]	109	168	436 [3]	141	190	436 [3]	176	212	436 [3]	231	249	436 [3]
		16	107			145			184			226			294		
		20	137			181			228			277			356		
		24	167			218			271			328			419		
		28	197			254			315			379			483		
		32	227			291			359			431			546		
		36	258			328			403			482			610		
	Roof & 1 Floor	20	65	148	436 [3]	108	168	436 [3]	155	190	436 [3]	204	212	436 [3]	284	249	436 [3]
		24	95			145			199			255			347		
		28	125			182			242			307			410		
		32	155			218			286			358			473		
		36	185			255			330			409			537		
	Roof & 2 Floors	28	52	148	436 [3]	109	168	436 [3]	170	190	436 [3]	234	212	436 [3]	338	249	436 [3]
		32	82			146			214			285			401		
		36	112			183			257			337			464		

U = Connector uplift load.
L = Connector lateral load (perpendicular to the wall).
S = Connector shear load (parallel to the wall).
R = L/W for wind perpendicular to the ridge and W/L for wind parallel to the ridge, where W is the building width and L is the building length.

* Anchorage required to resist lateral loads shall be determined in the foundation design per Section 1.1.4.

See footnotes 1-4.

Copyright © American Wood Council. Downloaded/printed pursuant to License Agreement. No reproduction or transfer authorized.
AMERICAN WOOD COUNCIL

Table 3.2 Sill or Bottom Plate to Foundation Connection Requirements for Wind **Exposure C**

Dead Load Assumptions: Roof/Ceiling Assembly DL = 15 psf, Wall DL = 121 plf

Wind Speed 3-second gust (mph) (See Figure 1.1)			90			95			100			105		
Connections	Foundation Supporting	Roof Span (ft)	Required Capacity of Connection (plf)[1,2,3,4]											
			U	L	S	U	L	S	U	L	S	U	L	S
Sill Plate to Foundation (Crawl Space or Basement)	Roof & 1 Floor	12	-	*	125R	-	*	139R	-	*	154R	9	*	170R
		16	-			-			7			24		
		20	-			-			18			38		
		24	-			8			30			53		
		28	-			17			41			68		
		32	-			25			53			82		
		36	5			34			65			97		
	Roof & 2 Floors	20	-	*	188R	-	*	209R	-	*	232R	-	*	256R
		24	-			-			-			-		
		28	-			-			-			-		
		32	-			-			-			12		
		36	-			-			-			27		
	Roof & 3 Floors	28	-	*	251R	-	*	279R	-	*	309R	-	*	341R
		32	-			-			-			-		
		36	-			-			-			-		
Wall Bottom Plate to Foundation (Slab-on-Grade)	Roof	12	-	74	436 [3]	-	82	436 [3]	-	91	436 [3]	9	100	436 [3]
		16	-			-			7			24		
		20	-			-			18			38		
		24	-			8			30			53		
		28	-			17			41			68		
		32	-			25			53			82		
		36	5			34			65			97		
	Roof & 1 Floor	20	-	74	436 [3]	-	82	436 [3]	-	91	436 [3]	-	100	436 [3]
		24	-			-			-			-		
		28	-			-			-			-		
		32	-			-			-			12		
		36	-			-			-			27		
	Roof & 2 Floors	28	-	74	436 [3]	-	82	436 [3]	-	91	436 [3]	-	100	436 [3]
		32	-			-			-			-		
		36	-			-			-			-		

U = Connector uplift load.
L = Connector lateral load (perpendicular to the wall).
S = Connector shear load (parallel to the wall).
R = L/W for wind perpendicular to the ridge and W/L for wind parallel to the ridge, where W is the building width and L is the building length.

***** Anchorage required to resist lateral loads shall be determined in the foundation design per Section 1.1.4.

See footnotes 1-4.

Copyright © American Wood Council. Downloaded/printed pursuant to License Agreement. No reproduction or transfer authorized.
AMERICAN WOOD COUNCIL

Table 3.2 Sill or Bottom Plate to Foundation Connection Requirements for Wind (Cont.)

Exposure C

Dead Load Assumptions: Roof/Ceiling Assembly DL = 15 psf, Wall DL = 121 plf

Wind Speed 3-second gust (mph) (See Figure 1.1)			110			115			120			130			140		
Connections	Foundation Supporting	Roof Span (ft)	Required Capacity of Connection (plf)[1,2,3,4]														
			U	L	S	U	L	S	U	L	S	U	L	S	U	L	S
Sill Plate to Foundation (Crawl Space or Basement)	Roof & 1 Floor	12	24	*	187R	40	*	204R	56	*	222R	90	*	261R	127	*	302R
		16	42			60			80			122			167		
		20	59			81			104			153			206		
		24	77			103			129			186			246		
		28	95			124			154			218			287		
		32	113			145			179			250			327		
		36	131			166			203			282			367		
	Roof & 2 Floors	20	-	*	280R	11	*	307R	34	*	334R	83	*	392R	136	*	454R
		24	7			33			59			116			176		
		28	25			54			84			148			217		
		32	43			75			109			180			257		
		36	61			96			133			212			297		
	Roof & 3 Floors	28	-	*	374R	-	*	409R	14	*	445R	78	*	523R	147	*	606R
		32	-			5			39			110			187		
		36	-			26			63			142			227		
Wall Bottom Plate to Foundation (Slab-on-Grade)	Roof	12	24	110	436 [3]	40	120	436 [3]	56	131	436 [3]	90	154	436 [3]	127	179	436 [3]
		16	42			60			80			122			167		
		20	59			81			104			153			206		
		24	77			103			129			186			246		
		28	95			124			154			218			287		
		32	113			145			179			250			327		
		36	131			166			203			282			367		
	Roof & 1 Floor	20	-	110	436 [3]	11	120	436 [3]	34	131	436 [3]	83	154	436 [3]	136	179	436 [3]
		24	7			33			59			116			176		
		28	25			54			84			148			217		
		32	43			75			109			180			257		
		36	61			96			133			212			297		
	Roof & 2 Floors	28	-	110	436 [3]	-	120	436 [3]	14	131	436 [3]	78	154	436 [3]	147	179	436 [3]
		32	-			5			39			110			187		
		36	-			26			63			142			227		

U = Connector uplift load.
L = Connector lateral load (perpendicular to the wall).
S = Connector shear load (parallel to the wall).
R = L/W for wind perpendicular to the ridge and W/L for wind parallel to the ridge, where W is the building width and L is the building length.

***** Anchorage required to resist lateral loads shall be determined in the foundation design per Section 1.1.4.

See footnotes 1-4.

Copyright © American Wood Council. Downloaded/printed pursuant to License Agreement. No reproduction or transfer authorized.

Table 3.2 Sill or Bottom Plate to Foundation Connection Requirements for Wind (Cont.) — Exposure C

Dead Load Assumptions: Roof/Ceiling Assembly DL = 15 psf, Wall DL = 121 plf

Wind Speed 3-second gust (mph) (See Figure 1.1)			150			160			170			180			195		
Connections	Foundation Supporting	Roof Span (ft)	Required Capacity of Connection (plf)[1,2,3,4]														
			U	L	S	U	L	S	U	L	S	U	L	S	U	L	S
Sill Plate to Foundation (Crawl Space or Basement)	Roof & 1 Floor	12	167	*	347R	210	*	395R	255	*	446R	303	*	500R	380	*	587R
		16	215			267			322			380			474		
		20	263			324			389			458			568		
		24	312			382			456			535			662		
		28	361			440			524			614			757		
		32	410			498			592			692			852		
		36	459			556			660			770			947		
	Roof & 2 Floors	20	193	*	522R	254	*	593R	319	*	670R	388	*	751R	498	*	881R
		24	242			312			386			465			592		
		28	291			370			454			544			687		
		32	340			428			522			622			782		
		36	389			486			590			700			877		
	Roof & 3 Floors	28	221	*	696R	300	*	792R	384	*	894R	474	*	1002R	617	*	1176R
		32	270			358			452			552			712		
		36	319			416			520			630			807		
Wall Bottom Plate to Foundation (Slab-on-Grade)	Roof	12	167	205	436[3]	210	233	436[3]	255	263	436[3]	303	295	436[3]	380	346	436[3]
		16	215			267			322			380			474		
		20	263			324			389			458			568		
		24	312			382			456			535			662		
		28	361			440			524			614			757		
		32	410			498			592			692			852		
		36	459			556			660			770			947		
	Roof & 1 Floor	20	193	205	436[3]	254	233	436[3]	319	263	436[3]	388	295	436[3]	498	346	436[3]
		24	242			312			386			465			592		
		28	291			370			454			544			687		
		32	340			428			522			622			782		
		36	389			486			590			700			877		
	Roof & 2 Floors	28	221	205	436[3]	300	233	436[3]	384	263	436[3]	474	295	436[3]	617	346	436[3]
		32	270			358			452			552			712		
		36	319			416			520			630			807		

U = Connector uplift load.
L = Connector lateral load (perpendicular to the wall).
S = Connector shear load (parallel to the wall).
R = L/W for wind perpendicular to the ridge and W/L for wind parallel to the ridge, where W is the building width and L is the building length.

* Anchorage required to resist lateral loads shall be determined in the foundation design per Section 1.1.4.

See footnotes 1-4.

Copyright © American Wood Council. Downloaded/printed pursuant to License Agreement. No reproduction or transfer authorized.

Footnotes for Table 3.2

[1] Tabulated uplift and lateral loads shall be permitted to be multiplied by 0.75 and 0.92, respectively, for framing not located within 8 feet of building corners.

[2] Tabulated connection requirements are based on total uplift minus the roof assembly dead load of 9 psf (0.6 x 15 psf = 9 psf) and wall assembly dead load of 73 plf (0.6 x 121 plf).

[3] Tabulated shear capacity requirements assume all walls are sheathed in accordance with Section 3.4.4.2. For other wall sheathing types the tabulated shear capacity of the connection shall be divided by the appropriate sheathing type adjustment factor in Table 3.17D.

[4] Tabulated shear capacity is tabulated based upon a 10 ft wall height and 10 ft top plate to ridge height. For other conditions, multiply value by the following adjustment.

		Roof + 1 Floor		Roof + 2 Floors		Roof + 3 Floors	
	Wall Height	**8'**	**10'**	**8'**	**10'**	**8'**	**10'**
Roof Pitch	**Top Plate to Ridge Height (ft)**	**Adjustment Factor**					
≤6:12	**0' (flat)**	0.58	0.72	0.66	0.81	0.70	0.86
	5'	0.66	0.79	0.71	0.86	0.74	0.90
	10'	0.74	0.87	0.76	0.91	0.78	0.94
>6:12	**5'**	0.72	0.86	0.75	0.90	0.77	0.93
	10'	0.87	1.00	0.85	1.00	0.84	1.00
	15'	1.01	1.14	0.95	1.10	0.91	1.07
	20'	1.15	1.29	1.04	1.19	0.99	1.14

Copyright © American Wood Council. Downloaded/printed pursuant to License Agreement. No reproduction or transfer authorized.

Table 3.2A Sill Plate to Foundation Connections Resisting Shear Loads from Wind*

(Prescriptive Alternative to Table 3.2)

Exposure B

Wind Speed 3-second gust (mph) (See Figure 1.1)			90	95	100	105	110	115	120	130	140	150	160	170	180	190
Anchor Bolt Size	Foundation Supporting	Building Dimension Perpendicular to Sill Plate (ft)	Number of Bolts Required in Sill Plate[1,2,3,4]													
1/2"	Roof & 1 Floor	12	2	2	2	2	2	2	2	3	3	3	4	4	4	5
		16	2	2	2	2	2	3	3	3	4	4	5	5	6	7
		20	2	2	3	3	3	3	3	4	5	5	6	6	7	8
		24	3	3	3	3	3	4	4	5	5	6	7	8	8	10
		28	3	3	3	4	4	4	5	5	6	7	8	9	10	11
		32	3	4	4	4	4	5	5	6	7	8	9	10	11	13
		36	4	4	4	5	5	5	6	7	8	9	10	11	12	14
		40	4	4	5	5	5	6	6	7	9	10	11	12	14	16
		50	5	5	6	6	7	7	8	9	11	12	14	15	17	20
		60	6	6	7	7	8	9	9	11	13	14	16	18	20	24
		70	7	7	8	8	9	10	11	13	15	17	19	21	24	28
		80	8	8	9	10	10	11	12	14	17	19	21	24	27	32
	Roof & 2 Floors	20	3	3	4	4	4	5	5	6	7	7	8	9	10	12
		24	4	4	4	5	5	5	6	7	8	9	10	11	12	14
		28	4	5	5	5	6	6	7	8	9	10	11	13	14	17
		32	5	5	5	6	6	7	8	9	10	12	13	15	16	19
		36	6	6	6	7	7	8	8	10	11	13	15	16	18	21
		40	6	6	7	7	8	9	9	11	13	14	16	18	20	24
		50	8	8	8	9	10	11	12	13	16	18	20	23	25	30
		60	9	9	10	11	12	13	14	16	19	21	24	27	30	35
		70	10	11	11	12	13	15	16	19	22	25	28	32	35	41
		80	12	12	13	14	15	17	18	21	25	28	32	36	40	47
	Roof & 3 Floors	28	6	6	6	7	7	8	9	10	12	13	15	17	19	22
		32	7	7	7	8	8	9	10	12	13	15	17	19	22	25
		36	7	7	8	9	9	10	11	13	15	17	19	22	24	29
		40	8	8	9	10	10	11	12	14	17	19	21	24	27	32
		50	10	10	11	12	13	14	15	18	21	24	27	30	34	39
		60	12	12	13	14	15	17	18	21	25	28	32	36	40	47
		70	14	14	15	16	18	19	21	25	29	33	37	42	47	55
		80	16	16	17	19	20	22	24	28	33	37	42	48	54	63
5/8"	Roof & 1 Floor	12	1	1	1	1	2	2	2	2	2	2	3	3	3	4
		16	2	2	2	2	2	2	2	2	3	3	3	4	4	5
		20	2	2	2	2	2	2	3	3	3	4	4	5	5	6
		24	2	2	2	2	3	3	3	3	4	4	5	5	6	7
		28	2	2	3	3	3	3	3	4	4	5	6	6	7	8
		32	3	3	3	3	3	4	4	4	5	6	6	7	8	9
		36	3	3	3	3	4	4	4	5	6	6	7	8	9	10
		40	3	3	3	4	4	4	5	5	6	7	8	9	10	11
		50	4	4	4	4	5	5	6	7	8	9	10	11	12	14
		60	4	4	5	5	6	6	7	8	9	10	11	13	14	17
		70	5	5	6	6	7	7	8	9	10	12	13	15	17	20
		80	6	6	6	7	7	8	9	10	12	13	15	17	19	22
	Roof & 2 Floors	20	2	3	3	3	3	3	4	4	5	5	6	7	7	9
		24	3	3	3	3	4	4	4	5	6	6	7	8	9	10
		28	3	3	4	4	4	4	5	6	6	7	8	9	10	12
		32	4	4	4	4	5	5	5	6	7	8	9	10	12	14
		36	4	4	4	5	5	6	6	7	8	9	10	12	13	15
		40	4	5	5	5	6	6	7	8	9	10	12	13	14	17
		50	5	6	6	6	7	8	8	10	11	13	14	16	18	21
		60	6	7	7	8	8	9	10	11	13	15	17	19	21	25
		70	7	8	8	9	10	10	11	13	15	17	20	22	25	29
		80	8	9	9	10	11	12	13	15	17	20	23	25	28	33
	Roof & 3 Floors	28	4	4	5	5	5	6	6	7	8	10	11	12	14	16
		32	5	5	5	6	6	7	7	8	10	11	12	14	15	18
		36	5	5	6	6	7	7	8	9	11	12	14	15	17	20
		40	6	6	6	7	7	8	9	10	12	13	15	17	19	22
		50	7	7	8	8	9	10	11	13	15	17	19	21	24	28
		60	9	9	9	10	11	12	13	15	17	20	23	25	28	33
		70	10	10	11	12	13	14	15	17	20	23	26	30	33	39
		80	11	11	12	13	14	16	17	20	23	26	30	34	38	44

* Anchorage required to resist lateral loads shall be determined in the foundation design per Section 1.1.4.

See footnotes 1-4.

Copyright © American Wood Council. Downloaded/printed pursuant to License Agreement. No reproduction or transfer authorized.
AMERICAN WOOD COUNCIL

Table 3.2A Sill Plate to Foundation Connections Resisting Shear Loads from Wind*

(Prescriptive Alternative to Table 3.2)

Exposure C

Wind Speed 3-second gust (mph) (See Figure 1.1)			90	95	100	105	110	115	120	130	140	150	160	170	180	195
Anchor Bolt Size	Foundation Supporting	Building Dimension Perpendicular to Sill Plate (ft)	Number of Bolts Required in Sill Plate[1,2,3,4]													
1/2"	Roof & 1 Floor	12	2	2	2	2	3	3	3	3	4	4	5	5	6	7
		16	2	3	3	3	3	4	4	4	5	6	6	7	8	9
		20	3	3	3	4	4	4	5	5	6	7	8	9	10	11
		24	3	4	4	4	5	5	5	6	7	8	9	10	12	13
		28	4	4	4	5	5	6	6	7	8	9	11	12	13	16
		32	4	5	5	6	6	7	7	8	9	11	12	14	15	18
		36	5	5	6	6	7	7	8	9	11	12	14	15	17	20
		40	5	6	6	7	7	8	9	10	12	13	15	17	19	22
		50	6	7	8	8	9	10	11	12	14	16	19	21	23	27
		60	7	8	9	10	11	12	13	15	17	20	22	25	28	33
		70	9	9	10	11	13	14	15	17	20	23	26	29	33	38
		80	10	11	12	13	14	16	17	20	23	26	30	33	37	44
	Roof & 2 Floors	20	4	4	5	5	6	6	7	8	9	10	11	13	14	17
		24	5	5	6	6	7	7	8	9	11	12	14	15	17	20
		28	5	6	6	7	8	8	9	11	12	14	16	18	20	23
		32	6	7	7	8	9	10	10	12	14	16	18	20	23	26
		36	7	7	8	9	10	11	12	13	16	18	20	23	25	30
		40	7	8	9	10	11	12	13	15	17	20	22	25	28	33
		50	9	10	11	12	13	15	16	19	21	24	28	31	35	41
		60	11	12	13	15	16	17	19	22	26	29	33	37	42	49
		70	13	14	15	17	19	20	22	26	30	34	39	44	49	57
		80	14	16	18	19	21	23	25	29	34	39	44	50	56	65
	Roof & 3 Floors	28	7	8	8	9	10	11	12	14	16	18	21	24	26	31
		32	8	9	10	11	12	13	14	16	18	21	24	27	30	35
		36	9	10	11	12	13	14	15	18	21	24	27	30	34	39
		40	10	11	12	13	14	16	17	20	23	26	30	33	37	44
		50	12	13	15	16	18	19	21	25	28	32	37	42	47	55
		60	14	16	18	19	21	23	25	29	34	39	44	50	56	65
		70	17	18	20	22	25	27	29	34	40	45	51	58	65	76
		80	19	21	23	26	28	31	33	39	45	52	59	66	74	87
5/8"	Roof & 1 Floor	12	1	2	2	2	2	2	2	3	3	3	4	4	4	5
		16	2	2	2	2	2	3	3	3	4	4	5	5	6	7
		20	2	2	2	3	3	3	3	4	4	5	6	6	7	8
		24	2	3	3	3	3	4	4	5	5	6	7	7	8	10
		28	3	3	3	4	4	4	5	5	6	7	8	9	10	11
		32	3	3	4	4	4	5	5	6	7	8	9	10	11	13
		36	3	4	4	4	5	5	6	7	8	9	10	11	12	14
		40	4	4	4	5	5	6	6	7	8	9	11	12	13	16
		50	5	5	5	6	7	7	8	9	10	12	13	15	17	19
		60	5	6	6	7	8	8	9	11	12	14	16	18	20	23
		70	6	7	7	8	9	10	11	12	14	16	18	21	23	27
		80	7	8	8	9	10	11	12	14	16	18	21	23	26	31
	Roof & 2 Floors	20	3	3	3	4	4	4	5	6	6	7	8	9	10	12
		24	3	4	4	4	5	5	6	7	8	9	10	11	12	14
		28	4	4	5	5	6	6	7	8	9	10	11	13	14	16
		32	4	5	5	6	6	7	7	9	10	11	13	14	16	19
		36	5	5	6	6	7	8	8	10	11	13	14	16	18	21
		40	5	6	6	7	8	8	9	11	12	14	16	18	20	23
		50	7	7	8	9	10	10	11	13	15	17	20	22	25	29
		60	8	9	9	10	11	12	13	16	18	21	23	26	30	35
		70	9	10	11	12	13	14	16	18	21	24	27	31	34	40
		80	10	11	12	14	15	16	18	21	24	27	31	35	39	46
	Roof & 3 Floors	28	5	6	6	7	7	8	9	10	11	13	15	17	19	22
		32	6	6	7	8	8	9	10	11	13	15	17	19	21	25
		36	6	7	8	8	9	10	11	13	15	17	19	21	24	28
		40	7	8	8	9	10	11	12	14	16	18	21	24	26	31
		50	9	9	10	11	13	14	15	17	20	23	26	29	33	38
		60	10	11	12	14	15	16	18	21	24	27	31	35	39	46
		70	12	13	14	16	17	19	21	24	28	32	36	41	46	54
		80	13	15	16	18	20	22	23	27	32	36	41	47	52	61

* Anchorage required to resist lateral loads shall be determined in the foundation design per Section 1.1.4.

See footnotes 1-4.

Copyright © American Wood Council. Downloaded/printed pursuant to License Agreement. No reproduction or transfer authorized.

Footnotes for Table 3.2A

Exposures B and C

[1] Prescriptive limits are based on assumptions in Table 3.2.

[2] Anchor bolts shall be uniformly distributed along the length of the sill plate. For anchor bolt limitations see Section 3.2.1.7.

[3] Sill plates are assumed to be treated Southern Pine.

[4] Tabulated shear capacity is tabulated based upon a 10 ft wall height and 10 ft top plate to ridge height. For other conditions, multiply value by the following adjustment.

		Roof + 1 Floor		Roof + 2 Floors		Roof + 3 Floors	
	Wall Height	**8'**	**10'**	**8'**	**10'**	**8'**	**10'**
Roof Pitch	**Top Plate to Ridge Height (ft)**	**Adjustment Factor**					
≤6:12	**0' (flat)**	0.58	0.72	0.66	0.81	0.70	0.86
	5'	0.66	0.79	0.71	0.86	0.74	0.90
	10'	0.74	0.87	0.76	0.91	0.78	0.94
>6:12	**5'**	0.72	0.86	0.75	0.90	0.77	0.93
	10'	0.87	1.00	0.85	1.00	0.84	1.00
	15'	1.01	1.14	0.95	1.10	0.91	1.07
	20'	1.15	1.29	1.04	1.19	0.99	1.14

Copyright © American Wood Council. Downloaded/printed pursuant to License Agreement. No reproduction or transfer authorized.
AMERICAN WOOD COUNCIL

Table 3.2B Bottom Plate to Foundation Connections (Anchor Bolts) Resisting Lateral and Shear Loads from Wind

(Prescriptive Alternative to Table 3.2)

Exposures B and C

For Exposures B & C and all Wind Speeds	
Anchor Bolt Diameter (in.)	Maximum Anchor Bolt Spacing (in.)[1,2,3,4]
1/2"	31
5/8"	48

1 Prescriptive limits are based on assumptions in Table 3.2.

2 When anchor bolts are used to resist uplift, lateral, and shear loads, the maximum anchor bolt spacing shall not exceed the lesser of the tabulated values for uplift loads (Table 3.2C) or lateral and shear loads (Table 3.2B). For other anchor bolt limitations see Section 3.2.1.7 and 3.2.2.3.

3 Tabulated anchor bolt spacings for shear loads assume walls are sheathed in accordance with section 3.4.4.2. For other wall sheathing types the tabulated anchor bolt spacings shall be multiplied by the appropriate sheathing type adjustment factor in Table 3.17D, but in no case shall anchor bolt spacings exceed 6 feet on center.

4 Lateral connections shall be designed to resist the loads in Table 3.5.

Table 3.2C Sill or Bottom Plate to Foundation Connections (Anchor Bolts) Resisting Uplift Loads from Wind

(Prescriptive Alternative to Table 3.2)

Exposure B

Wind Speed 3-second gust (mph) (See Figure 1.1)			90	95	100	105	110	115	120	130	140	150	160	170	180	195
Sill or Bottom Plate to Foundation Anchor Bolt Connection Resisting	Plate Size	Foundation Supporting	Maximum Anchor Bolt Spacing (in.)[1,2]													
Uplift Loads	2x4		8' End Zones													
		1-3 stories	72	72	72	72	72	72	71	57	43	35	30	27	24	22
			Interior Zones													
		1-3 stories	72	72	72	72	72	72	72	66	50	41	35	31	28	26
	2x6		8' End Zones													
		1-3 stories	72	72	72	72	72	72	72	68	51	42	36	32	29	26
			Interior Zones													
		1-3 stories	72	72	72	72	72	72	72	72	60	49	42	37	34	31

Table 3.2C Sill or Bottom Plate to Foundation Connections (Anchor Bolts) Resisting Uplift Loads from Wind

(Prescriptive Alternative to Table 3.2)

Exposure C

Wind Speed 3-second gust (mph) (See Figure 1.1)			90	95	100	105	110	115	120	130	140	150	160	170	180	195
Sill or Bottom Plate to Foundation Anchor Bolt Connection Resisting	Plate Size	Foundation Supporting	Maximum Anchor Bolt Spacing (in.)[1,2]													
Uplift Loads	2x4		8' End Zones													
		1-3 stories	72	72	61	50	43	38	34	29	25	23	20	19	17	16
			Interior Zones													
		1-3 stories	72	72	71	58	50	44	40	34	30	26	24	22	20	18
	2x6		8' End Zones													
		1-3 stories	72	72	72	59	51	45	41	35	30	27	25	22	21	19
			Interior Zones													
		1-3 stories	72	72	72	69	60	53	48	40	35	32	29	26	24	22

1 Prescriptive limits are based on assumptions in Table 3.2.

2 When anchor bolts are used to resist uplift, lateral, and shear loads, the maximum anchor bolt spacing shall not exceed the lesser of the tabulated values for uplift loads (Table 3.2C) or lateral and shear loads (Table 3.2B). For other anchor bolt limitations see Section 3.2.1.7 and 3.2.2.3.

Copyright © American Wood Council. Downloaded/printed pursuant to License Agreement. No reproduction or transfer authorized.

Table 3.3 Sill Plate to Foundation Connection Shear Load for Seismic

GSL = 30

(Dead Load Assumptions: Roof/ceiling = 15 psf, Floor = 12 psf, Partition = 8 psf, Wall = 110 plf; Ground Snow Load = 30 psf; Lateral force resisting system: Wood structural panel shear walls)

Foundation Supporting	Minimum Building Dimension, W (ft)	SDC A					SDC B					SDC C				
		L/W					L/W					L/W				
		1	1.5	2	2.5	3	1	1.5	2	2.5	3	1	1.5	2	2.5	3
		Foundation Sill Plate Connection Shear Load, plf[1,2,3,4]														
Roof, Ceiling, & 1 Floor	12	11	15	19	23	27	21	28	36	44	51	31	43	55	66	78
	16	12	16	21	26	30	23	32	41	50	59	35	49	62	76	89
	20	13	18	24	29	34	26	36	46	56	66	39	54	70	85	100
	24	14	20	26	32	38	28	39	51	62	74	42	60	77	94	112
	28	16	22	29	35	40	30	43	56	68	77	46	65	85	104	117
	32	17	24	31	38[5]	-	33	47	61	75[5]	-	50	71	92	113[5]	-
	36	18	26	34	37[5]	-	35	51	66	72[5]	-	54	77	100	110[5]	-
Roof, Ceiling, & 2 Floors	12	19	25	32	39	45	36	49	62	75	88	55	74	94	114	133
	16	21	29	36	44	52	40	55	70	86	101	61	84	107	130	153
	20	23	32	41	50	58	45	62	79	96	114	67	94	120	146	172
	24	25	35	45	55	65	49	68	88	107	126	74	103	133	162	191
	28	27	38	50	61	69	53	75	96	118	133	80	113	146	178	202
	32	30	42	54	66[5]	-	57	81	105	128[5]	-	87	123	159	195[5]	-
	36	32	45	58	64[5]	-	62	87	113	125[5]	-	93	133	172	189[5]	-
Roof, Ceiling & 3 Floors	12	28	38	47	57	67	54	73	92	111	130	82	110	139	168	197
	16	31	42	54	65	77	60	82	105	127	149	91	125	158	192	226
	20	34	47	60	74	87	66	92	117	143	168	101	139	178	216	255
	24	38	52	67	82	96	73	101	130	159	187	110	154	197	240	284
	28	41	57	74	90	102	79	111	143	175	197	120	168	216	265	299
	32	44	62	80	98[5]	-	86	121	156	191[5]	-	130	183	236	289[5]	-
	36	47	67	87	95[5]	-	92	130	168	185[5]	-	139	197	255	281[5]	-

Foundation Supporting	Minimum Building Dimension, W (ft)	SDC D_0					SDC D_1					SDC D_2				
		L/W					L/W					L/W				
		1	1.5	2	2.5	3	1	1.5	2	2.5	3	1	1.5	2	2.5	3
		Foundation Sill Plate Connection Shear Load, plf[1,2,3,4]														
Roof, Ceiling, & 1 Floor	12	42	58	73	89	104	52	71	91	110	129	73	101	128	155	182
	16	47	65	83	101	119	58	81	103	125	148	82	114	145	177	209
	20	52	72	93	114	134	64	90	115	141	167	91	127	163	199	235
	24	57	80	103	126	150	70	99	128	157	185	99	140	180	221	261
	28	62	88	113	139	157	77	108	140	172	195	108	153	198	243	275
	32	67	95	123	152[5]	-	83	118	153	188[5]	-	117	166	215	265[5]	-
	36	72	103	133	147[5]	-	89	127	165	182[5]	-	125	179	233	257[5]	-
Roof, Ceiling, & 2 Floors	12	73	100	126	152	178	91	123	156	188	221	128	174	220	266	312
	16	82	112	143	174	204	101	139	177	215	253	143	196	250	303	357
	20	90	125	160	195	230	112	155	199	242	285	158	219	280	341	402
	24	99	138	178	217	257	123	171	220	269	318	173	242	310	379	448
	28	108	151	195	239	270	133	188	242	296	335	188	264	341	417	472
	32	116	164	213	261[5]	-	144	204	263	323[5]	-	203	287	371	455[5]	-
	36	125	178	230	253[5]	-	155	220	285	314[5]	-	218	310	402	442[5]	-
Roof, Ceiling & 3 Floors	12	109	148	187	225	264	135	183	231	279	327	191	258	326	393	461
	16	122	167	212	257	303	151	207	263	319	375	213	292	371	450	528
	20	135	187	238	290	341	167	231	295	359	423	236	326	416	506	596
	24	148	206	264	322	380	183	255	327	399	471	258	360	461	563	664
	28	161	225	290	355	401	199	279	359	439	496	281	394	506	619	700
	32	174	245	316	387[5]	-	215	303	391	479[5]	-	303	428	552	676[5]	-
	36	187	264	342	376[5]	-	231	327	424	466[5]	-	326	461	597	657[5]	-

See footnotes 1-5.

Copyright © American Wood Council. Downloaded/printed pursuant to License Agreement. No reproduction or transfer authorized.
AMERICAN WOOD COUNCIL

Table 3.3 Sill Plate to Foundation Connection Shear Load for Seismic (Cont.)

GSL = 50

(Dead Load Assumptions: Roof/ceiling = 15 psf, Floor = 12 psf, Partition = 8 psf, Wall = 110 plf; Ground Snow Load = 50 psf; Lateral force resisting system: Wood structural panel shear walls)

Foundation Supporting	Minimum Building Dimension, W (ft)	SDC A					SDC B					SDC C				
		L/W					L/W					L/W				
		1	1.5	2	2.5	3	1	1.5	2	2.5	3	1	1.5	2	2.5	3
		Foundation Sill Plate Connection Shear Load, plf[1,2,3,4]														
Roof, Ceiling, & 1 Floor	12	13	17	22	27	31	24	34	43	52	61	37	51	65	79	92
	16	14	20	25	31	36	28	38	49	60	70	42	58	74	90	107
	20	16	22	28	35	41	31	43	55	68	80	46	65	84	102	121
	24	17	25	32	39	46	34	48	62	76	89	51	72	93	114	135
	28	19	27	35	43	49	37	52	68	83	95	56	79	103	126	143
	32	21	29	38	47[5]	-	40	57	74	91[5]	-	61	87	113	139[5]	-
	36	22	32	42	46[5]	-	43	62	81	89[5]	-	66	94	122	135[5]	-
Roof, Ceiling, & 2 Floors	12	21	28	36	43	51	40	55	69	84	98	61	83	105	127	149
	16	23	32	41	50	58	45	62	79	96	113	68	94	120	146	172
	20	26	36	46	56	66	50	70	89	109	129	76	106	135	165	195
	24	28	40	51	63	74	55	77	99	122	144	84	117	151	184	218
	28	31	44	56	69	78	60	85	110	134	152	91	129	166	203	230
	32	34	48	62	76[5]	-	65	92	120	147[5]	-	99	140	181	223[5]	-
	36	36	52	67	74[5]	-	70	100	130	143[5]	-	107	152	197	217[5]	-
Roof, Ceiling & 3 Floors	12	30	41	51	62	73	58	79	100	121	141	88	120	151	183	214
	16	34	46	59	71	84	65	90	114	139	163	99	136	173	210	247
	20	37	52	66	81	95	73	101	129	157	185	110	152	195	237	280
	24	41	57	74	90	106	80	111	143	175	206	121	169	217	265	312
	28	45	63	81	99	112	87	122	157	193	218	132	185	239	292	330
	32	49	69	89	109[5]	-	94	133	172	211[5]	-	143	202	260	319[5]	-
	36	52	74	96	106[5]	-	101	144	186	205[5]	-	154	218	282	311[5]	-

Foundation Supporting	Minimum Building Dimension, W (ft)	SDC D_0					SDC D_1					SDC D_2				
		L/W					L/W					L/W				
		1	1.5	2	2.5	3	1	1.5	2	2.5	3	1	1.5	2	2.5	3
		Foundation Sill Plate Connection Shear Load, plf[1,2,3,4]														
Roof, Ceiling, & 1 Floor	12	50	68	87	105	124	62	85	107	130	153	87	119	151	184	216
	16	56	78	99	121	143	69	96	123	150	177	98	136	174	212	249
	20	62	87	112	137	162	77	108	139	170	201	109	152	196	240	283
	24	69	97	125	153	182	85	120	155	190	225	120	169	218	268	317
	28	75	106	138	169	192	93	132	171	210	238	131	186	241	296	335
	32	81	116	151	186[5]	-	101	144	187	230[5]	-	142	203	263	324[5]	-
	36	88	126	164	181[5]	-	109	156	203	224[5]	-	153	220	286	316[5]	-
Roof, Ceiling, & 2 Floors	12	82	111	141	170	200	101	138	174	211	247	143	194	246	297	348
	16	92	126	161	196	230	114	156	199	242	285	160	221	281	341	402
	20	102	142	181	221	261	126	175	225	274	323	178	247	317	386	456
	24	112	157	202	247	292	139	194	250	306	361	196	274	353	431	509
	28	122	172	222	273	308	151	213	276	338	382	213	301	388	476	538
	32	132	188	243	298[5]	-	164	233	301	369[5]	-	231	328	424	521[5]	-
	36	143	203	264	290[5]	-	177	252	326	360[5]	-	249	355	460	507[5]	-
Roof, Ceiling & 3 Floors	12	119	161	203	245	287	147	199	251	303	355	207	281	354	428	501
	16	133	182	232	281	331	165	226	287	348	410	232	318	405	491	578
	20	147	204	261	318	375	183	253	323	394	464	257	357	456	555	654
	24	162	226	290	355	419	201	280	360	439	519	283	395	507	619	731
	28	177	248	320	391	442	219	307	396	485	548	308	433	558	683	772
	32	191	270	349	428[5]	-	237	335	432	530[5]	-	334	472	610	747[5]	-
	36	206	292	378	417[5]	-	255	362	469	516[5]	-	360	510	661	728[5]	-

See footnotes 1-5.

Copyright © American Wood Council. Downloaded/printed pursuant to License Agreement. No reproduction or transfer authorized.

Table 3.3 Sill Plate to Foundation Connection Shear Load for Seismic (Cont.)

GSL = 70

(Dead Load Assumptions: Roof/ceiling = 15 psf, Floor = 12 psf, Partition = 8 psf, Wall = 110 plf; Ground Snow Load = 70 psf; Lateral force resisting system: Wood structural panel shear walls)

Foundation Supporting	Minimum Building Dimension, W (ft)	SDC A					SDC B					SDC C				
		L/W					L/W					L/W				
		1	1.5	2	2.5	3	1	1.5	2	2.5	3	1	1.5	2	2.5	3
		Foundation Sill Plate Connection Shear Load, plf[1,2,3,4]														
Roof, Ceiling, & 1 Floor	12	13	18	23	28	33	26	36	45	55	65	39	54	69	83	98
	16	15	21	27	33	39	29	41	52	64	75	44	62	79	96	114
	20	17	24	30	37	44	33	46	59	72	85	50	69	89	109	129
	24	19	26	34	42	49	36	51	66	81	96	55	77	100	122	145
	28	20	29	38	46	52	40	56	73	89	101	60	85	110	136	154
	32	22	32	41	51[5]	-	43	61	80	98[5]	-	65	93	121	149[5]	-
	36	24	34	45	49[5]	-	46	67	87	96[5]	-	70	101	131	145[5]	-
Roof, Ceiling, & 2 Floors	12	22	29	37	45	53	42	57	72	87	102	63	86	109	132	155
	16	24	33	43	52	61	47	65	83	101	118	71	98	125	152	179
	20	27	38	48	59	69	52	73	93	114	135	79	110	142	173	204
	24	30	42	54	66	78	58	81	104	127	151	87	123	158	193	228
	28	32	46	59	73	82	63	89	115	141	159	96	135	174	213	241
	32	35	50	65	79[5]	-	68	97	126	154[5]	-	104	147	190	234[5]	-
	36	38	54	70	77[5]	-	74	105	136	150[5]	-	112	159	207	228[5]	-
Roof, Ceiling & 3 Floors	12	31	42	53	64	75	60	82	103	124	146	91	124	156	189	221
	16	35	48	61	74	87	68	93	118	143	168	102	141	179	217	255
	20	39	54	69	84	98	75	104	133	162	191	114	158	202	246	290
	24	43	59	76	93	110	83	115	148	181	214	125	175	225	274	324
	28	46	65	84	103	116	90	127	163	200	226	137	192	247	303	342
	32	50	71	92	113[5]	-	98	138	178	219[5]	-	148	209	270	332[5]	-
	36	54	77	100	110[5]	-	105	149	194	213[5]	-	159	226	293	323[5]	-

Foundation Supporting	Minimum Building Dimension, W (ft)	SDC D_0					SDC D_1					SDC D_2				
		L/W					L/W					L/W				
		1	1.5	2	2.5	3	1	1.5	2	2.5	3	1	1.5	2	2.5	3
		Foundation Sill Plate Connection Shear Load, plf[1,2,3,4]														
Roof, Ceiling, & 1 Floor	12	53	72	92	112	131	65	90	114	138	163	92	127	161	195	229
	16	60	83	106	129	152	74	102	131	160	189	104	144	185	225	266
	20	66	93	120	147	173	82	115	148	182	215	116	163	209	256	303
	24	73	104	134	164	194	91	128	166	203	241	128	181	234	287	339
	28	80	114	148	182	206	99	141	183	225	255	140	199	258	317	359
	32	87	125	162	199[5]	-	108	154	201	246[5]	-	152	218	283	348[5]	-
	36	94	135	176	194[5]	-	117	167	218	241[5]	-	165	236	307	339[5]	-
Roof, Ceiling, & 2 Floors	12	85	116	147	177	208	105	143	182	220	258	149	202	256	310	363
	16	96	132	168	204	240	118	163	208	253	298	167	230	293	357	420
	20	106	148	190	231	273	132	183	235	287	338	186	259	331	404	477
	24	117	164	211	259	306	145	204	262	320	379	205	287	369	452	534
	28	128	181	233	286	324	159	224	289	354	401	224	315	407	499	565
	32	139	197	255	313[5]	-	172	244	316	388[5]	-	243	344	445	547[5]	-
	36	150	213	277	305[5]	-	186	264	343	378[5]	-	262	373	484	533[5]	-
Roof, Ceiling & 3 Floors	12	122	166	209	253	296	151	205	259	313	367	213	289	365	441	517
	16	137	188	240	291	342	170	233	297	360	424	240	329	418	508	597
	20	152	211	270	329	388	189	262	335	408	481	266	369	472	575	678
	24	168	234	301	367	434	208	290	373	455	538	293	409	525	642	758
	28	183	257	332	406	459	227	319	411	503	569	319	449	579	709	801
	32	198	280	362	444[5]	-	246	347	449	550[5]	-	346	489	633	776[5]	-
	36	214	303	393	433[5]	-	265	376	487	536[5]	-	373	530	686	756[5]	-

See footnotes 1-5.

Copyright © American Wood Council. Downloaded/printed pursuant to License Agreement. No reproduction or transfer authorized.
AMERICAN WOOD COUNCIL

Footnotes to Table 3.3

[1] Tabulated foundation sill plate shear connection load is appplicable to the minimum dimension, W, of the diaphragm for a rectangular building with dimension W x L. The foundation sill plate shear connection load for the side corresponding to the maximum building dimension, L, need not exceed the tabulated loads for L/W=1.0.

[2] Where the lateral force resisting system is other than wood structural panel shear walls, tabulated foundation sill plate shear connection loads shall be increased by multiplying by 3.25.

[3] Foundation sill plate shear connection load can be determined for other load cases by multiplying by the appropriate adjustment factor given in the following table:

Foundation Supporting	Minimum Building Dimension, W (ft.)	Roof/Ceiling Assembly = 15 psf				Roof/Ceiling Assembly = 25 psf			
		Floor = 12 psf Partition = 8 psf Wall = 180 plf	Floor = 20 psf Partition = 8 psf Wall = 180 plf	Floor = 12 psf Partition = 8 psf Wall = 110 plf	Floor = 20 psf Partition = 8 psf Wall = 110 plf	Floor = 12 psf Partition = 8 psf Wall = 180 plf	Floor = 20 psf Partition = 8 psf Wall = 180 plf	Floor = 12 psf Partition = 8 psf Wall = 110 plf	Floor = 20 psf Partition = 8 psf Wall = 110 plf
		Foundation sill plate connection shear load adjustment factors							
Roof, Ceiling & 1 Floor	12	1.33	1.41	1.00	1.10	1.51	1.60	1.18	1.28
	16	1.30	1.39	1.00	1.12	1.49	1.59	1.20	1.31
	20	1.27	1.38	1.00	1.13	1.47	1.58	1.21	1.33
	24	1.24	1.37	1.00	1.14	1.45	1.57	1.21	1.35
	28	1.22	1.36	1.00	1.15	1.44	1.57	1.22	1.37
	32	1.21	1.35	1.00	1.15	1.43	1.56	1.23	1.38
	36	1.19	1.34	1.00	1.16	1.42	1.56	1.23	1.39
Roof, Ceiling & 2 Floors	12	1.36	1.46	1.00	1.13	1.48	1.58	1.12	1.25
	16	1.32	1.45	1.00	1.15	1.44	1.57	1.13	1.28
	20	1.29	1.43	1.00	1.17	1.42	1.56	1.13	1.30
	24	1.27	1.42	1.00	1.18	1.40	1.55	1.14	1.32
	28	1.25	1.41	1.00	1.19	1.38	1.54	1.14	1.33
	32	1.23	1.40	1.00	1.19	1.36	1.54	1.14	1.34
	36	1.21	1.39	1.00	1.20	1.35	1.53	1.15	1.35
Roof, Ceiling & 3 Floors	12	1.37	1.49	1.00	1.14	1.46	1.57	1.09	1.23
	16	1.34	1.47	1.00	1.16	1.42	1.56	1.09	1.26
	20	1.30	1.46	1.00	1.18	1.40	1.55	1.10	1.28
	24	1.28	1.45	1.00	1.20	1.37	1.54	1.10	1.30
	28	1.25	1.44	1.00	1.21	1.35	1.53	1.10	1.31
	32	1.24	1.43	1.00	1.21	1.34	1.53	1.11	1.32
	36	1.22	1.42	1.00	1.22	1.32	1.52	1.11	1.33

[4] Effective seismic weight used to determine foundation sill plate anchorage load includes 20% of ground snow load where the ground snow load exceeds 30 psf. S_{DS} used for SDC A, B, C, D_0, D_1 and D_2 are as follows: S_{DS}=0.17 for SDC A; S_{DS}=0.33 for SDC B; S_{DS}=0.50 for SDC C; S_{DS}=0.67 for SDC D_0; S_{DS}=0.83 for SDC D_1; S_{DS}=1.17 for SDC D_2.

[5] Tabulated foundation sill plate anchorage loads are based on a building length, L, equal to 80 ft.

Copyright © American Wood Council. Downloaded/printed pursuant to License Agreement. No reproduction or transfer authorized.

Table 3.3A1 1/2" Anchor Bolts - Foundation Sill Plate Connection Resisting Shear Loads from Seismic (prescriptive alternative to Table 3.3)

GSL = 30
ϕ = 1/2"

(Dead Load Assumptions: Roof/ceiling = 15 psf, Floor = 12 psf, Partition = 8 psf, Wall = 110 plf; Ground Snow Load = 30 psf; Lateral force resisting system: Wood structural panel shear walls)

Foundation Supporting	Minimum Building Dimension, W (ft)	SDC A					SDC B					SDC C				
		L/W					L/W					L/W				
		1	1.5	2	2.5	3	1	1.5	2	2.5	3	1	1.5	2	2.5	3
		Number of Bolts Required[1,2,3,4,5,6]														
Roof, Ceiling, & 1 Floor	12	1	1	1	1	1	1	1	1	1	1	1	1	1	1	1
	16	1	1	1	1	1	1	1	1	1	1	1	1	1	2	2
	20	1	1	1	1	1	1	1	1	2	2	1	1	2	2	2
	24	1	1	1	1	1	1	1	2	2	2	1	2	2	3	3
	28	1	1	1	1	2	1	2	2	2	2	2	2	3	3	4
	32	1	1	1	2[7]	-	1	2	2	3[7]	-	2	3	3	4[7]	-
	36	1	1	2	2[7]	-	2	2	3	3[7]	-	2	3	4	4[7]	-
Roof, Ceiling, & 2 Floors	12	1	1	1	1	1	1	1	1	1	1	1	1	2	2	2
	16	1	1	1	1	1	1	1	2	2	2	1	2	2	2	3
	20	1	1	1	1	2	1	2	2	2	3	2	2	3	3	4
	24	1	1	1	2	2	2	2	2	3	3	2	3	3	4	5
	28	1	1	2	2	2	2	2	3	4	4	3	3	4	5	6
	32	1	2	2	2[7]	-	2	3	4	4[7]	-	3	4	5	6[7]	-
	36	2	2	2	3[7]	-	3	3	4	5[7]	-	4	5	6	7[7]	-
Roof, Ceiling & 3 Floors	12	1	1	1	1	1	1	1	2	2	2	1	2	2	2	3
	16	1	1	1	1	2	1	2	2	2	3	2	2	3	3	4
	20	1	1	2	2	2	2	2	3	3	4	2	3	4	4	5
	24	1	2	2	2	3	2	3	3	4	5	3	4	5	6	7
	28	2	2	2	3	3	3	3	4	5	6	4	5	6	7	8
	32	2	2	3	3[7]	-	3	4	5	6[7]	-	4	6	7	9[7]	-
	36	2	3	3	4[7]	-	4	5	6	7[7]	-	5	7	9	10[7]	-

Foundation Supporting	Minimum Building Dimension, W (ft)	SDC D_0					SDC D_1					SDC D_2				
		L/W					L/W					L/W				
		1	1.5	2	2.5	3	1	1.5	2	2.5	3	1	1.5	2	2.5	3
		Number of Bolts Required[1,2,3,4,5,6]														
Roof, Ceiling, & 1 Floor	12	1	1	1	1	2	1	1	2	2	2	1	2	2	2	3
	16	1	1	2	2	2	1	2	2	2	3	2	2	3	3	4
	20	1	2	2	3	3	2	2	3	3	4	2	3	3	4	5
	24	2	2	3	3	4	2	3	3	4	5	3	4	4	5	6
	28	2	3	3	4	5	2	3	4	5	6	3	4	6	7	8
	32	2	3	4	5[7]	-	3	4	5	6[7]	-	4	5	7	8[7]	-
	36	3	4	5	5[7]	-	3	5	6	7[7]	-	5	6	8	9[7]	-
Roof, Ceiling, & 2 Floors	12	1	2	2	2	2	2	2	2	3	3	2	2	3	3	4
	16	2	2	3	3	4	2	3	3	4	4	3	3	4	5	6
	20	2	3	3	4	5	3	3	4	5	6	3	5	6	7	8
	24	3	4	4	5	6	3	4	5	6	8	4	6	7	9	10
	28	3	4	6	7	7	4	5	7	8	9	5	7	9	11	13
	32	4	5	7	8[7]	-	5	6	8	10[7]	-	6	9	11	14[7]	-
	36	5	6	8	9[7]	-	6	8	10	11[7]	-	8	11	14	15[7]	-
Roof, Ceiling & 3 Floors	12	2	2	3	3	3	2	3	3	4	4	3	3	4	5	6
	16	2	3	4	4	5	3	4	4	5	6	4	5	6	7	8
	20	3	4	5	6	7	4	5	6	7	8	5	6	8	10	11
	24	4	5	6	8	9	5	6	8	9	11	6	8	11	13	15
	28	5	6	8	10	11	6	8	10	12	13	8	11	14	16	19
	32	6	8	10	12[7]	-	7	9	12	15[7]	-	9	13	17	20[7]	-
	36	7	9	12	13[7]	-	8	11	15	16[7]	-	11	16	20	22[7]	-

See footnotes 1-7.

Copyright © American Wood Council. Downloaded/printed pursuant to License Agreement. No reproduction or transfer authorized.

Table 3.3A2 **1/2" Anchor Bolts - Foundation Sill Plate Connection Resisting Shear Loads from Seismic (prescriptive alternative to Table 3.3)**

GSL = 50
ϕ = 1/2"

(Dead Load Assumptions: Roof/ceiling = 15 psf, Floor = 12 psf, Partition = 8 psf, Wall = 110 plf; Ground Snow Load = 50 psf; Lateral force resisting system: Wood structural panel shear walls)

Foundation Supporting	Minimum Building Dimension, W (ft)	SDC A					SDC B					SDC C				
		L/W					L/W					L/W				
		1	1.5	2	2.5	3	1	1.5	2	2.5	3	1	1.5	2	2.5	3
		Number of Bolts Required[1,2,3,4,5,6]														
Roof, Ceiling, & 1 Floor	12	1	1	1	1	1	1	1	1	1	1	1	1	1	1	2
	16	1	1	1	1	1	1	1	1	1	2	1	1	2	2	2
	20	1	1	1	1	1	1	1	2	2	2	1	2	2	2	3
	24	1	1	1	1	2	1	2	2	2	2	2	2	3	3	3
	28	1	1	1	2	2	1	2	2	3	3	2	3	3	4	4
	32	1	1	2	2[7]	-	2	2	3	3[7]	-	2	3	4	5[7]	-
	36	1	2	2	2[7]	-	2	3	3	3[7]	-	3	4	5	5[7]	-
Roof, Ceiling, & 2 Floors	12	1	1	1	1	1	1	1	1	1	2	1	1	2	2	2
	16	1	1	1	1	1	1	1	2	2	2	2	2	2	3	3
	20	1	1	1	2	2	1	2	2	3	3	2	2	3	4	4
	24	1	1	2	2	2	2	2	3	3	4	2	3	4	5	5
	28	1	2	2	2	3	2	3	3	4	4	3	4	5	6	6
	32	1	2	2	3[7]	-	2	3	4	5[7]	-	3	5	6	7[7]	-
	36	2	2	3	3[7]	-	3	4	5	5[7]	-	4	6	7	8[7]	-
Roof, Ceiling & 3 Floors	12	1	1	1	1	1	1	1	2	2	2	1	2	2	3	3
	16	1	1	1	2	2	1	2	2	3	3	2	3	3	4	4
	20	1	1	2	2	2	2	2	3	3	4	3	3	4	5	6
	24	1	2	2	2	3	2	3	4	4	5	3	4	5	6	7
	28	2	2	3	3	3	3	4	5	5	6	4	5	7	8	9
	32	2	3	3	4[7]	-	3	4	6	7[7]	-	5	6	8	10[7]	-
	36	2	3	4	4[7]	-	4	5	7	7[7]	-	6	8	10	11[7]	-

Foundation Supporting	Minimum Building Dimension, W (ft)	SDC D_0					SDC D_1					SDC D_2				
		L/W					L/W					L/W				
		1	1.5	2	2.5	3	1	1.5	2	2.5	3	1	1.5	2	2.5	3
		Number of Bolts Required[1,2,3,4,5,6]														
Roof, Ceiling, & 1 Floor	12	1	1	1	2	2	1	1	2	2	2	1	2	2	3	3
	16	1	2	2	2	3	2	2	2	3	3	2	2	3	4	4
	20	2	2	3	3	3	2	2	3	4	4	2	3	4	5	6
	24	2	3	3	4	5	2	3	4	5	5	3	4	5	6	7
	28	2	3	4	5	5	3	4	5	6	7	4	5	7	8	9
	32	3	4	5	6[7]	-	3	5	6	7[7]	-	5	6	8	10[7]	-
	36	3	5	6	6[7]	-	4	6	7	8[7]	-	6	8	10	11[7]	-
Roof, Ceiling, & 2 Floors	12	1	2	2	2	3	2	2	2	3	3	2	3	3	4	4
	16	2	2	3	3	4	2	3	3	4	5	3	4	5	6	6
	20	2	3	4	5	5	3	4	5	6	6	4	5	6	8	9
	24	3	4	5	6	7	4	5	6	7	8	5	7	8	10	12
	28	4	5	6	8	8	4	6	8	9	10	6	8	10	13	14
	32	4	6	8	9[7]	-	5	7	9	11[7]	-	7	10	13	16[7]	-
	36	5	7	9	10[7]	-	6	9	11	12[7]	-	9	12	16	17[7]	-
Roof, Ceiling & 3 Floors	12	2	2	3	3	4	2	3	3	4	4	3	4	4	5	6
	16	2	3	4	5	5	3	4	5	6	7	4	5	6	8	9
	20	3	4	5	6	7	4	5	6	8	9	5	7	9	11	13
	24	4	5	7	8	10	5	7	8	10	12	7	9	12	14	17
	28	5	7	9	11	12	6	8	11	13	15	8	12	15	18	20
	32	6	8	11	13[7]	-	7	10	13	16[7]	-	10	14	18	22[7]	-
	36	7	10	13	14[7]	-	9	12	16	18[7]	-	12	17	22	25[7]	-

See footnotes 1-7.

Copyright © American Wood Council. Downloaded/printed pursuant to License Agreement. No reproduction or transfer authorized.

Table 3.3A3 1/2" Anchor Bolts - Foundation Sill Plate Connection Resisting Shear Loads from Seismic (prescriptive alternative to Table 3.3)

GSL = 70
ϕ = 1/2"

(Dead Load Assumptions: Roof/ceiling = 15 psf, Floor = 12 psf, Partition = 8 psf, Wall = 110 plf; Ground Snow Load = 70 psf; Lateral force resisting system: Wood structural panel shear walls)

Foundation Supporting	Minimum Building Dimension, W (ft)	SDC A					SDC B					SDC C				
		L/W					L/W					L/W				
		1	1.5	2	2.5	3	1	1.5	2	2.5	3	1	1.5	2	2.5	3
		Number of Bolts Required[1,2,3,4,5,6]														
Roof, Ceiling, & 1 Floor	12	1	1	1	1	1	1	1	1	1	1	1	1	1	1	2
	16	1	1	1	1	1	1	1	1	1	2	1	1	2	2	2
	20	1	1	1	1	1	1	1	2	2	2	1	2	2	3	3
	24	1	1	1	1	2	1	2	2	2	3	2	2	3	3	4
	28	1	1	1	2	2	2	2	2	3	3	2	3	3	4	4
	32	1	1	2	2[7]	-	2	2	3	3[7]	-	2	3	4	5[7]	-
	36	1	2	2	2[7]	-	2	3	3	4[7]	-	3	4	5	5[7]	-
Roof, Ceiling, & 2 Floors	12	1	1	1	1	1	1	1	1	1	2	1	1	2	2	2
	16	1	1	1	1	1	1	1	2	2	2	2	2	2	3	3
	20	1	1	1	2	2	1	2	2	3	3	2	3	3	4	4
	24	1	1	2	2	2	2	2	3	3	4	2	3	4	5	6
	28	1	2	2	2	3	2	3	3	4	5	3	4	5	6	7
	32	2	2	2	3[7]	-	3	3	4	5[7]	-	4	5	6	7[7]	-
	36	2	2	3	3[7]	-	3	4	5	5[7]	-	4	6	7	8[7]	-
Roof, Ceiling & 3 Floors	12	1	1	1	1	1	1	1	2	2	2	2	2	2	3	3
	16	1	1	1	2	2	1	2	2	3	3	2	3	3	4	4
	20	1	1	2	2	2	2	2	3	3	4	3	3	4	5	6
	24	1	2	2	3	3	2	3	4	4	5	3	4	5	7	8
	28	2	2	3	3	3	3	4	5	6	6	4	5	7	8	9
	32	2	3	3	4[7]	-	3	5	6	7[7]	-	5	7	8	10[7]	-
	36	2	3	4	4[7]	-	4	5	7	8[7]	-	6	8	10	11[7]	-

Foundation Supporting	Minimum Building Dimension, W (ft)	SDC D_0					SDC D_1					SDC D_2				
		L/W					L/W					L/W				
		1	1.5	2	2.5	3	1	1.5	2	2.5	3	1	1.5	2	2.5	3
		Number of Bolts Required[1,2,3,4,5,6]														
Roof, Ceiling, & 1 Floor	12	1	1	2	2	2	1	1	2	2	2	2	2	2	3	3
	16	1	2	2	2	3	2	2	2	3	3	2	3	3	4	4
	20	2	2	3	3	4	2	3	3	4	4	3	3	4	5	6
	24	2	3	3	4	5	3	3	4	5	6	3	4	6	7	8
	28	3	3	4	5	6	3	4	5	6	7	4	6	7	9	10
	32	3	4	5	6[7]	-	4	5	6	8[7]	-	5	7	9	11[7]	-
	36	4	5	6	7[7]	-	4	6	8	8[7]	-	6	8	11	12[7]	-
Roof, Ceiling, & 2 Floors	12	1	2	2	2	3	2	2	3	3	3	2	3	3	4	5
	16	2	2	3	4	4	2	3	4	4	5	3	4	5	6	7
	20	2	3	4	5	6	3	4	5	6	7	4	5	7	8	9
	24	3	4	5	6	7	4	5	6	8	9	5	7	9	10	12
	28	4	5	7	8	9	5	6	8	10	11	6	9	11	13	15
	32	5	6	8	10[7]	-	6	8	10	12[7]	-	8	11	14	17[7]	-
	36	5	8	10	11[7]	-	7	9	12	13[7]	-	9	13	17	18[7]	-
Roof, Ceiling & 3 Floors	12	2	2	3	3	4	2	3	3	4	5	3	4	5	5	6
	16	3	3	4	5	6	3	4	5	6	7	4	5	7	8	9
	20	3	4	5	7	8	4	5	7	8	9	5	7	9	11	13
	24	4	6	7	9	10	5	7	9	11	12	7	10	12	15	17
	28	5	7	9	11	12	6	9	11	13	15	9	12	15	19	21
	32	6	9	11	14[7]	-	8	11	14	17[7]	-	11	15	19	23[7]	-
	36	8	11	14	15[7]	-	9	13	17	18[7]	-	13	18	23	26[7]	-

See footnotes 1-7.

Copyright © American Wood Council. Downloaded/printed pursuant to License Agreement. No reproduction or transfer authorized.

Table 3.3A4 5/8" Anchor Bolts - Foundation Sill Plate Connection Resisting Shear Loads from Seismic (prescriptive alternative to Table 3.3)

GSL = 30
ϕ = 5/8"

(Dead Load Assumptions: Roof/ceiling = 15 psf, Floor = 12 psf, Partition = 8 psf, Wall = 110 plf; Ground Snow Load = 30 psf; Lateral force resisting system: Wood structural panel shear walls)

Foundation Supporting	Minimum Building Dimension, W (ft)	SDC A					SDC B					SDC C				
		L/W					L/W					L/W				
		1	1.5	2	2.5	3	1	1.5	2	2.5	3	1	1.5	2	2.5	3
		Number of Bolts Required[1,2,3,4,5,6]														
Roof, Ceiling, & 1 Floor	12	1	1	1	1	1	1	1	1	1	1	1	1	1	1	1
	16	1	1	1	1	1	1	1	1	1	1	1	1	1	1	1
	20	1	1	1	1	1	1	1	1	1	1	1	1	1	2	2
	24	1	1	1	1	1	1	1	1	1	2	1	1	2	2	2
	28	1	1	1	1	1	1	1	2	2	2	1	2	2	2	3
	32	1	1	1	1[7]	-	1	1	2	2[7]	-	2	2	2	3[7]	-
	36	1	1	1	1[7]	-	1	2	2	2[7]	-	2	2	3	3[7]	-
Roof, Ceiling, & 2 Floors	12	1	1	1	1	1	1	1	1	1	1	1	1	1	1	2
	16	1	1	1	1	1	1	1	1	1	2	1	1	2	2	2
	20	1	1	1	1	1	1	1	2	2	2	1	2	2	2	3
	24	1	1	1	1	2	1	2	2	2	2	2	2	3	3	3
	28	1	1	1	2	2	1	2	2	3	3	2	3	3	4	4
	32	1	1	2	2[7]	-	2	2	3	3[7]	-	2	3	4	5[7]	-
	36	1	2	2	2[7]	-	2	3	3	3[7]	-	3	4	4	5[7]	-
Roof, Ceiling & 3 Floors	12	1	1	1	1	1	1	1	1	1	2	1	1	2	2	2
	16	1	1	1	1	1	1	1	2	2	2	1	2	2	2	3
	20	1	1	1	1	2	1	2	2	2	3	2	2	3	3	4
	24	1	1	2	2	2	2	2	3	3	3	2	3	4	4	5
	28	1	2	2	2	2	2	3	3	4	4	3	4	4	5	6
	32	1	2	2	3[7]	-	2	3	4	4[7]	-	3	4	5	6[7]	-
	36	2	2	3	3[7]	-	3	4	4	5[7]	-	4	5	6	7[7]	-

Foundation Supporting	Minimum Building Dimension, W (ft)	SDC D_0					SDC D_1					SDC D_2				
		L/W					L/W					L/W				
		1	1.5	2	2.5	3	1	1.5	2	2.5	3	1	1.5	2	2.5	3
		Number of Bolts Required[1,2,3,4,5,6]														
Roof, Ceiling, & 1 Floor	12	1	1	1	1	1	1	1	1	1	2	1	1	1	2	2
	16	1	1	1	2	2	1	1	2	2	2	1	2	2	2	3
	20	1	1	2	2	2	1	2	2	2	3	2	2	3	3	4
	24	1	2	2	2	3	2	2	2	3	3	2	3	3	4	5
	28	2	2	3	3	3	2	2	3	4	4	2	3	4	5	5
	32	2	2	3	4[7]	-	2	3	4	4[7]	-	3	4	5	6[7]	-
	36	2	3	4	4[7]	-	3	3	4	5[7]	-	3	5	6	6[7]	-
Roof, Ceiling, & 2 Floors	12	1	1	1	2	2	1	1	2	2	2	1	2	2	3	3
	16	1	2	2	2	3	2	2	2	3	3	2	3	3	4	4
	20	2	2	3	3	3	2	3	3	4	4	3	3	4	5	6
	24	2	3	3	4	4	2	3	4	5	5	3	4	5	6	7
	28	2	3	4	5	5	3	4	5	6	7	4	5	7	8	9
	32	3	4	5	6[7]	-	3	5	6	7[7]	-	5	6	8	10[7]	-
	36	3	5	6	6[7]	-	4	6	7	8[7]	-	6	8	10	11[7]	-
Roof, Ceiling & 3 Floors	12	1	2	2	2	3	2	2	2	3	3	2	2	3	4	4
	16	2	2	3	3	4	2	3	3	4	4	3	4	4	5	6
	20	2	3	4	4	5	3	3	4	5	6	4	5	6	7	8
	24	3	4	5	5	6	3	4	6	7	8	4	6	8	9	11
	28	3	5	6	7	8	4	6	7	8	9	6	8	10	12	13
	32	4	6	7	8[7]	-	5	7	9	10[7]	-	7	9	12	14[7]	-
	36	5	7	8	9[7]	-	6	8	10	11[7]	-	8	11	14	16[7]	-

See footnotes 1-7.

Copyright © American Wood Council. Downloaded/printed pursuant to License Agreement. No reproduction or transfer authorized.

Table 3.3A5 5/8" Anchor Bolts - Foundation Sill Plate Connection Resisting Shear Loads from Seismic (prescriptive alternative to Table 3.3)

GSL = 50
ϕ = 5/8"

(Dead Load Assumptions: Roof/ceiling = 15 psf, Floor = 12 psf, Partition = 8 psf, Wall = 110 plf; Ground Snow Load = 50 psf; Lateral force resisting system: Wood structural panel shear walls)

Foundation Supporting	Minimum Building Dimension, W (ft)	SDC A					SDC B					SDC C				
		L/W					L/W					L/W				
		1	1.5	2	2.5	3	1	1.5	2	2.5	3	1	1.5	2	2.5	3
		Number of Bolts Required[1,2,3,4,5,6]														
Roof, Ceiling, & 1 Floor	12	1	1	1	1	1	1	1	1	1	1	1	1	1	1	1
	16	1	1	1	1	1	1	1	1	1	1	1	1	1	1	2
	20	1	1	1	1	1	1	1	1	1	2	1	1	2	2	2
	24	1	1	1	1	1	1	1	1	2	2	1	2	2	2	3
	28	1	1	1	1	1	1	1	2	2	2	2	2	2	3	3
	32	1	1	1	1[7]	-	1	2	2	2[7]	-	2	2	3	3[7]	-
	36	1	1	1	2[7]	-	2	2	2	3[7]	-	2	3	3	4[7]	-
Roof, Ceiling, & 2 Floors	12	1	1	1	1	1	1	1	1	1	1	1	1	1	1	2
	16	1	1	1	1	1	1	1	1	1	2	1	1	2	2	2
	20	1	1	1	1	1	1	1	2	2	2	1	2	2	3	3
	24	1	1	1	1	2	1	2	2	2	3	2	2	3	3	4
	28	1	1	2	2	2	2	2	2	3	3	2	3	3	4	5
	32	1	1	2	2[7]	-	2	2	3	4[7]	-	3	3	4	5[7]	-
	36	1	2	2	2[7]	-	2	3	4	4[7]	-	3	4	5	6[7]	-
Roof, Ceiling & 3 Floors	12	1	1	1	1	1	1	1	1	1	2	1	1	2	2	2
	16	1	1	1	1	1	1	1	2	2	2	2	2	2	3	3
	20	1	1	1	2	2	1	2	2	3	3	2	2	3	4	4
	24	1	1	2	2	2	2	2	3	3	4	2	3	4	5	5
	28	1	2	2	2	3	2	3	3	4	4	3	4	5	6	6
	32	2	2	2	3[7]	-	2	3	4	5[7]	-	3	5	6	7[7]	-
	36	2	2	3	3[7]	-	3	4	5	5[7]	-	4	6	7	8[7]	-

Foundation Supporting	Minimum Building Dimension, W (ft)	SDC D_0					SDC D_1					SDC D_2				
		L/W					L/W					L/W				
		1	1.5	2	2.5	3	1	1.5	2	2.5	3	1	1.5	2	2.5	3
		Number of Bolts Required[1,2,3,4,5,6]														
Roof, Ceiling, & 1 Floor	12	1	1	1	1	1	1	1	1	2	2	1	1	2	2	2
	16	1	1	2	2	2	1	1	2	2	2	2	2	2	3	3
	20	1	2	2	2	3	1	2	2	3	3	2	2	3	4	4
	24	2	2	2	3	3	2	2	3	3	4	2	3	4	5	5
	28	2	2	3	4	4	2	3	4	4	5	3	4	5	6	7
	32	2	3	4	4[7]	-	3	3	4	5[7]	-	3	5	6	7[7]	-
	36	3	3	4	5[7]	-	3	4	5	6[7]	-	4	6	7	8[7]	-
Roof, Ceiling, & 2 Floors	12	1	1	2	2	2	1	2	2	2	2	2	2	2	3	3
	16	1	2	2	3	3	2	2	3	3	3	2	3	3	4	5
	20	2	2	3	3	4	2	3	3	4	5	3	4	5	5	6
	24	2	3	4	4	5	3	4	4	5	6	4	5	6	7	8
	28	3	4	5	5	6	3	4	5	7	7	4	6	8	9	10
	32	3	4	6	7[7]	-	4	5	7	8[7]	-	5	7	9	11[7]	-
	36	4	5	7	7[7]	-	5	6	8	9[7]	-	6	9	11	12[7]	-
Roof, Ceiling & 3 Floors	12	1	2	2	2	3	2	2	2	3	3	2	3	3	4	4
	16	2	2	3	3	4	2	3	3	4	5	3	4	5	6	6
	20	2	3	4	5	5	3	4	5	6	6	4	5	6	8	9
	24	3	4	5	6	7	4	5	6	7	9	5	7	8	10	12
	28	4	5	6	8	8	4	6	8	9	10	6	8	11	13	14
	32	4	6	8	9[7]	-	5	7	9	11[7]	-	7	10	13	16[7]	-
	36	5	7	9	10[7]	-	6	9	11	12[7]	-	9	12	16	17[7]	-

See footnotes 1-7.

Copyright © American Wood Council. Downloaded/printed pursuant to License Agreement. No reproduction or transfer authorized.

Table 3.3A6 5/8" Anchor Bolts - Foundation Sill Plate Connection Resisting Shear Loads from Seismic (prescriptive alternative to Table 3.3)

GSL = 70
ϕ = 5/8"

(Dead Load Assumptions: Roof/ceiling = 15 psf, Floor = 12 psf, Partition = 8 psf, Wall = 110 plf; Ground Snow Load = 70 psf; Lateral force resisting system: Wood structural panel shear walls)

Foundation Supporting	Minimum Building Dimension, W (ft)	SDC A					SDC B					SDC C				
		L/W					L/W					L/W				
		1	1.5	2	2.5	3	1	1.5	2	2.5	3	1	1.5	2	2.5	3
		Number of Bolts Required[1,2,3,4,5,6]														
Roof, Ceiling, & 1 Floor	12	1	1	1	1	1	1	1	1	1	1	1	1	1	1	1
	16	1	1	1	1	1	1	1	1	1	1	1	1	1	1	2
	20	1	1	1	1	1	1	1	1	1	2	1	1	2	2	2
	24	1	1	1	1	1	1	1	2	2	2	1	2	2	2	3
	28	1	1	1	1	1	1	2	2	2	2	2	2	2	3	3
	32	1	1	1	2[7]	-	1	2	2	3[7]	-	2	2	3	4[7]	-
	36	1	1	2	2[7]	-	2	2	3	3[7]	-	2	3	4	4[7]	-
Roof, Ceiling, & 2 Floors	12	1	1	1	1	1	1	1	1	1	1	1	1	1	2	2
	16	1	1	1	1	1	1	1	1	2	2	1	2	2	2	2
	20	1	1	1	1	1	1	1	2	2	2	2	2	2	3	3
	24	1	1	1	2	2	1	2	2	2	3	2	2	3	3	4
	28	1	1	2	2	2	2	2	3	3	3	2	3	4	4	5
	32	1	2	2	2[7]	-	2	3	3	4[7]	-	3	4	4	5[7]	-
	36	1	2	2	2[7]	-	2	3	4	4[7]	-	3	4	5	6[7]	-
Roof, Ceiling & 3 Floors	12	1	1	1	1	1	1	1	1	1	2	1	1	2	2	2
	16	1	1	1	1	1	1	1	2	2	2	2	2	2	3	3
	20	1	1	1	2	2	1	2	2	3	3	2	3	3	4	4
	24	1	1	2	2	2	2	2	3	3	4	2	3	4	5	6
	28	1	2	2	2	3	2	3	3	4	5	3	4	5	6	7
	32	2	2	2	3[7]	-	3	3	4	5[7]	-	4	5	6	7[7]	-
	36	2	2	3	3[7]	-	3	4	5	5[7]	-	4	6	7	8[7]	-

Foundation Supporting	Minimum Building Dimension, W (ft)	SDC D_0					SDC D_1					SDC D_2				
		L/W					L/W					L/W				
		1	1.5	2	2.5	3	1	1.5	2	2.5	3	1	1.5	2	2.5	3
		Number of Bolts Required[1,2,3,4,5,6]														
Roof, Ceiling, & 1 Floor	12	1	1	1	1	2	1	1	1	2	2	1	1	2	2	2
	16	1	1	2	2	2	1	2	2	2	2	2	2	2	3	3
	20	1	2	2	2	3	2	2	2	3	3	2	3	3	4	4
	24	2	2	3	3	4	2	2	3	4	4	2	3	4	5	6
	28	2	3	3	4	4	2	3	4	5	5	3	4	5	6	7
	32	2	3	4	5[7]	-	3	4	5	6[7]	-	4	5	6	8[7]	-
	36	3	4	5	5[7]	-	3	4	6	6[7]	-	4	6	8	8[7]	-
Roof, Ceiling, & 2 Floors	12	1	1	2	2	2	1	2	2	2	2	2	2	2	3	3
	16	1	2	2	3	3	2	2	3	3	4	2	3	4	4	5
	20	2	2	3	3	4	2	3	4	4	5	3	4	5	6	7
	24	2	3	4	4	5	3	4	5	5	6	4	5	6	7	9
	28	3	4	5	6	6	3	5	6	7	8	5	6	8	10	11
	32	3	5	6	7[7]	-	4	6	7	9[7]	-	6	8	10	12[7]	-
	36	4	5	7	8[7]	-	5	7	8	9[7]	-	7	9	12	13[7]	-
Roof, Ceiling & 3 Floors	12	1	2	2	2	3	2	2	3	3	3	2	3	3	4	4
	16	2	2	3	3	4	2	3	4	4	5	3	4	5	6	7
	20	2	3	4	5	5	3	4	5	6	7	4	5	7	8	9
	24	3	4	5	6	7	4	5	6	8	9	5	7	9	10	12
	28	4	5	6	8	9	5	6	8	10	11	6	9	11	13	15
	32	5	6	8	10[7]	-	6	8	10	12[7]	-	8	11	14	16[7]	-
	36	5	8	10	11[7]	-	7	9	12	13[7]	-	9	13	16	18[7]	-

See footnotes 1-7.

Copyright © American Wood Council. Downloaded/printed pursuant to License Agreement. No reproduction or transfer authorized.
AMERICAN WOOD COUNCIL

Footnotes to Table 3.3A

[1] Prescriptive limits are based on assumptions in Table 3.3.
[2] Anchor bolts shall be uniformly distributed along the length of the sill plate. See Section 3.2.1.7 for anchor bolt limitations.
[3] Sill plates are assumed to be treated Southern Pine.
[4] Where the lateral force resisting system is other than wood structural panel shear walls the number of anchor bolts required shall be increased by multiplying by 3.25.
[5] The number of foundation sill plate anchor bolts can be determined for other load cases by multiplying by the appropriate adjustment factor given in the following table:

Foundation Supporting	Minimum Building Dimension, W (ft.)	Roof/Ceiling Assembly = 15 psf				Roof/Ceiling Assembly = 25 psf			
		Floor = 12 psf Partition = 8 psf Wall = 180 plf	Floor = 20 psf Partition = 8 psf Wall = 180 plf	Floor = 12 psf Partition = 8 psf Wall = 110 plf	Floor = 20 psf Partition = 8 psf Wall = 110 plf	Floor = 12 psf Partition = 8 psf Wall = 180 plf	Floor = 20 psf Partition = 8 psf Wall = 180 plf	Floor = 12 psf Partition = 8 psf Wall = 110 plf	Floor = 20 psf Partition = 8 psf Wall = 110 plf
		Foundation sill plate connection shear load adjustment factors							
Roof, Ceiling & 1 Floor	12	1.33	1.41	1.00	1.10	1.51	1.60	1.18	1.28
	16	1.30	1.39	1.00	1.12	1.49	1.59	1.20	1.31
	20	1.27	1.38	1.00	1.13	1.47	1.58	1.21	1.33
	24	1.24	1.37	1.00	1.14	1.45	1.57	1.21	1.35
	28	1.22	1.36	1.00	1.15	1.44	1.57	1.22	1.37
	32	1.21	1.35	1.00	1.15	1.43	1.56	1.23	1.38
	36	1.19	1.34	1.00	1.16	1.42	1.56	1.23	1.39
Roof, Ceiling & 2 Floors	12	1.36	1.46	1.00	1.13	1.48	1.58	1.12	1.25
	16	1.32	1.45	1.00	1.15	1.44	1.57	1.13	1.28
	20	1.29	1.43	1.00	1.17	1.42	1.56	1.13	1.30
	24	1.27	1.42	1.00	1.18	1.40	1.55	1.14	1.32
	28	1.25	1.41	1.00	1.19	1.38	1.54	1.14	1.33
	32	1.23	1.40	1.00	1.19	1.36	1.54	1.14	1.34
	36	1.21	1.39	1.00	1.20	1.35	1.53	1.15	1.35
Roof, Ceiling & 3 Floors	12	1.37	1.49	1.00	1.14	1.46	1.57	1.09	1.23
	16	1.34	1.47	1.00	1.16	1.42	1.56	1.09	1.26
	20	1.30	1.46	1.00	1.18	1.40	1.55	1.10	1.28
	24	1.28	1.45	1.00	1.20	1.37	1.54	1.10	1.30
	28	1.25	1.44	1.00	1.21	1.35	1.53	1.10	1.31
	32	1.24	1.43	1.00	1.21	1.34	1.53	1.11	1.32
	36	1.22	1.42	1.00	1.22	1.32	1.52	1.11	1.33

[6] Effective seismic weight used to determine foundation sill plate anchorage load includes 20% of ground snow load where the ground snow load exceeds 30 psf. S_{DS} used for SDC A, B, C, D_0, D_1 and D_2 are as follows: S_{DS}=0.17 for SDC A; S_{DS}=0.33 for SDC B; S_{DS}=0.50 for SDC C; S_{DS}=0.67 for SDC D_0; S_{DS}=0.83 for SDC D_1; S_{DS}=1.17 for SDC D_2.

[7] The number of foundation sill plate anchor bolts is based on a building length, L, equal to 80 ft.

Table 3.3B Bottom Plate to Foundation Connections (Anchor Bolts) Resisting Shear from Seismic

For Seismic Deisgn Categories A, B, C, D_0, D_1, and D_2	
Anchor Bolt Diameter (in.)	**Maximum Anchor Bolt Spacing (in.)[1,2]**
1/2"	67
5/8"	72

[1] Tabulated anchor bolt spacings assume shear walls are sheathed in accordance with Section 3.4.4.2. For other wall sheathing types the tabulated anchor bolt spacings shall be multiplied by the appropriate sheathing type adjustment factor in Table 3.17D. For anchor bolt limitations see Section 3.2.1.7.
[2] Wall bottom plates are assumed to be treated Southern Pine.

Copyright © American Wood Council. Downloaded/printed pursuant to License Agreement. No reproduction or transfer authorized.
AMERICAN WOOD COUNCIL

Table 3.4 Rafter/Truss Framing to Wall Connection Requirements for Wind Loads

Exposure B

(Dead Load Assumptions: Roof/Ceiling Assembly DL = 15 psf)

Wind Speed 3-second gust (mph) (See Figure 1.1)		90			95			100			105		
Rafter/ Truss Spacing (in.)	Roof Span (ft)	Required Capacity of Connection (lbs.)[1]											
		U[2,3,5]	L	S[4]	U[2,3,5]	L	S[4]	U[2,3,5]	L	S[4]	U[2,3,5]	L	S[4]
12	12	7	53	48R	16	59	48R	25	66	48R	35	72	48R
	16	6			17			28			40		
	20	5			18			32			46		
	24	4			19			35			51		
	28	4			20			38			57		
	32	3			22			42			63		
	36	2			23			45			68		
16	12	9	71	64R	21	79	64R	34	87	64R	47	96	64R
	16	8			22			38			54		
	20	7			24			42			61		
	24	6			26			47			68		
	28	5			27			51			76		
	32	4			29			56			83		
	36	3			31			60			91		
19.2	12	11	85	77R	25	95	77R	40	105	77R	56	116	77R
	16	9			27			45			65		
	20	8			29			50			73		
	24	7			31			56			82		
	28	6			33			61			91		
	32	5			35			67			100		
	36	4			37			72			109		
24	12	13	106	96R	31	118	96R	50	131	96R	70	145	96R
	16	12			33			57			81		
	20	10			36			63			92		
	24	9			38			70			103		
	28	7			41			77			114		
	32	6			44			83			125		
	36	5			46			90			136		

U = Connector uplift load.

L = Connector lateral load (Perpendicular to the wall).

S = Connector shear load (Parallel to the wall).

R = L/W for wind perpendicular to the ridge and W/L for wind parallel to the ridge, where W is the building width and L is the building length.

1 Tabulated uplift and lateral loads shall be permitted to be multiplied by 0.75 and 0.92, respectively, for framing not located within 8 feet of building corners.

2 Tabulated uplift loads assume a reduced roof and ceiling assembly dead load of 9 psf (0.6 x 15 psf = 9 psf).

3 Tabulated uplift loads are specified for roof-to-wall connections. When calculating uplift loads for wall-to-wall or wall-to-foundation connections, tabulated uplift values shall be permitted to be reduced by 73 plf (0.60 x 121 plf)

4 Shear connection values shall be multiplied by the following adjustments:

	Wall Height	8'	10'
Roof Pitch	Top Plate to Ridge Height	Adjustment Factor	
≤6:12	0' (flat)	0.40	0.50
	5'	0.65	0.75
	10'	0.90	1.00
>6:12	5'	0.65	0.75
	10'	0.90	1.00
	15'	1.15	1.25
	20'	1.40	1.50

5 For jack rafter uplift connections, use a roof span equal to twice the jack rafter length. The jack rafter length includes the overhang length and the jack span.

Copyright © American Wood Council. Downloaded/printed pursuant to License Agreement. No reproduction or transfer authorized.

Table 3.4 Rafter/Truss Framing to Wall Connection Requirements for Wind Loads (Cont.)

Exposure B

(Dead Load Assumptions: Roof/Ceiling Assembly DL = 15 psf)

Wind Speed 3-second gust (mph) (See Figure 1.1)		110			115			120			130			140		
Rafter/ Truss Spacing (in.)	Roof Span (ft)	Required Capacity of Connection (lbs.)[1]														
		U[2,3,5]	L	S[4]	U[2,3,5]	L	S[4]	U[2,3,5]	L	S[4]	U[2,3,5]	L	S[4]	U[2,3,5]	L	S[4]
12	12	46	79	48R	56	87	48R	68	94	50R	92	111	58R	118	129	68R
	16	53			66			80			110			142		
	20	61			77			93			128			165		
	24	69			87			106			146			189		
	28	77			97			118			164			213		
	32	84			107			131			182			237		
	36	92			118			144			200			261		
16	12	61	106	64R	75	116	64R	91	126	66R	123	148	78R	158	171	90R
	16	71			89			107			147			189		
	20	81			102			124			170			221		
	24	92			116			141			195			252		
	28	102			129			158			219			284		
	32	113			143			175			243			316		
	36	123			157			192			267			348		
19.2	12	73	127	77R	90	139	77R	109	151	79R	147	177	93R	189	206	108R
	16	85			106			129			176			227		
	20	97			122			149			205			265		
	24	110			139			169			233			303		
	28	122			155			190			262			341		
	32	135			172			210			291			379		
	36	148			188			231			321			418		
24	12	91	159	96R	113	173	96R	136	189	99R	184	222	117R	237	257	135R
	16	106			133			161			220			284		
	20	122			153			186			256			331		
	24	137			174			211			292			379		
	28	153			194			237			328			426		
	32	169			215			263			364			474		
	36	185			235			288			401			522		

U = Connector uplift load.

L = Connector lateral load (Perpendicular to the wall).

S = Connector shear load (Parallel to the wall).

R = L/W for wind perpendicular to the ridge and W/L for wind parallel to the ridge, where W is the building width and L is the building length.

1 Tabulated uplift and lateral loads shall be permitted to be multiplied by 0.75 and 0.92, respectively, for framing not located within 8 feet of building corners.

2 Tabulated uplift loads assume a reduced roof and ceiling assembly dead load of 9 psf (0.6 x 15 psf = 9 psf).

3 Tabulated uplift loads are specified for roof-to-wall connections. When calculating uplift loads for wall-to-wall or wall-to-foundation connections, tabulated uplift values shall be permitted to be reduced by 73 plf (0.60 x 121 plf) for each full wall above.

4 Shear connection values shall be multiplied by the following adjustments:

	Wall Height	8'	10'
Roof Pitch	Top Plate to Ridge Height	Adjustment Factor	
≤6:12	0' (flat)	0.40	0.50
	5'	0.65	0.75
	10'	0.90	1.00
>6:12	5'	0.65	0.75
	10'	0.90	1.00
	15'	1.15	1.25
	20'	1.40	1.50

5 For jack rafter uplift connections, use a roof span equal to twice the jack rafter length. The jack rafter length includes the overhang length and the jack span.

Copyright © American Wood Council. Downloaded/printed pursuant to License Agreement. No reproduction or transfer authorized.

Table 3.4 Rafter/Truss Framing to Wall Connection Requirements for Wind Loads (Cont.)

Exposure B

(Dead Load Assumptions: Roof/Ceiling Assembly DL = 15 psf)

Wind Speed 3-second gust (mph) (See Figure 1.1)		150			160			170			180			195		
Rafter/ Truss Spacing (in.)	Roof Span (ft)	Required Capacity of Connection (lbs.)[1]														
		U[2,3,5]	L	S[4]	U[2,3,5]	L	S[4]	U[2,3,5]	L	S[4]	U[2,3,5]	L	S[4]	U[2,3,5]	L	S[4]
12	12	147	148	78R	177	168	88R	209	190	100R	243	212	112R	297	249	131R
	16	176			213			252			293			360		
	20	206			249			295			344			423		
	24	236			286			339			395			486		
	28	266			323			383			447			549		
	32	296			359			427			498			612		
	36	326			396			470			549			676		
16	12	195	197	103R	236	224	118R	278	253	133R	324	283	149R	397	333	175R
	16	235			284			336			391			480		
	20	275			332			394			459			563		
	24	315			381			452			527			648		
	28	355			430			510			595			732		
	32	395			479			569			664			817		
	36	435			528			627			732			901		
19.2	12	235	236	124R	283	269	141R	334	303	159R	388	340	179R	476	399	210R
	16	282			340			403			469			576		
	20	330			399			472			551			676		
	24	378			457			542			632			777		
	28	426			516			612			714			878		
	32	474			575			683			797			980		
	36	522			634			753			879			1081		
24	12	293	295	155R	353	336	177R	418	379	199R	486	425	223R	595	499	262R
	16	352			426			504			586			719		
	20	412			498			591			688			845		
	24	472			572			678			790			971		
	28	532			645			765			893			1098		
	32	592			719			853			996			1225		
	36	653			792			941			1098			1352		

U = Connector uplift load.

L = Connector lateral load (Perpendicular to the wall).

S = Connector shear load (Parallel to the wall).

R = L/W for wind perpendicular to the ridge and W/L for wind parallel to the ridge, where W is the building width and L is the building length.

1 Tabulated uplift and lateral loads shall be permitted to be multiplied by 0.75 and 0.92, respectively, for framing not located within 8 feet of building corners.

2 Tabulated uplift loads assume a reduced roof and ceiling assembly dead load of 9 psf (0.6 x 15 psf = 9 psf).

3 Tabulated uplift loads are specified for roof-to-wall connections. When calculating uplift loads for wall-to-wall or wall-to-foundation connections, tabulated uplift values shall be permitted to be reduced by 73 plf (0.60 x 121 plf) for each full wall above.

4 Shear connection values shall be multiplied by the following adjustments:

	Wall Height	8'	10'
Roof Pitch	Top Plate to Ridge Height	Adjustment Factor	
≤6:12	0' (flat)	0.40	0.50
	5'	0.65	0.75
	10'	0.90	1.00
>6:12	5'	0.65	0.75
	10'	0.90	1.00
	15'	1.15	1.25
	20'	1.40	1.50

5 For jack rafter uplift connections, use a roof span equal to twice the jack rafter length. The jack rafter length includes the overhang length and the jack span.

Copyright © American Wood Council. Downloaded/printed pursuant to License Agreement. No reproduction or transfer authorized.

Table 3.4 Rafter/Truss Framing to Wall Connection Requirements for Wind Loads

Exposure C

(Dead Load Assumptions: Roof/Ceiling Assembly DL = 15 psf)

Wind Speed 3-second gust (mph) (See Figure 1.1)		90			95			100			105		
Rafter/ Truss Spacing (in.)	Roof Span (ft)	Required Capacity of Connection (lbs.)[1]											
		U[2,3,5]	L	S[4]	U[2,3,5]	L	S[4]	U[2,3,5]	L	S[4]	U[2,3,5]	L	S[4]
12	12	37	74	48R	50	82	48R	63	91	48R	77	100	53R
	16	43			58			74			91		
	20	49			67			86			106		
	24	55			76			97			120		
	28	61			84			109			135		
	32	67			93			121			150		
	36	73			102			133			165		
16	12	50	98	64R	66	110	64R	84	121	64R	102	134	70R
	16	57			78			99			121		
	20	65			89			114			141		
	24	73			101			130			160		
	28	81			113			146			180		
	32	89			124			161			200		
	36	98			136			177			220		
19.2	12	60	118	77R	80	132	77R	101	146	77R	123	161	84R
	16	69			93			119			146		
	20	78			107			137			169		
	24	88			121			156			193		
	28	98			135			175			216		
	32	107			149			193			240		
	36	117			163			212			263		
24	12	75	148	96R	100	164	96R	126	182	96R	154	201	106R
	16	86			117			149			182		
	20	98			134			172			211		
	24	110			151			195			241		
	28	122			169			218			270		
	32	134			187			242			300		
	36	146			204			265			329		

U = Connector uplift load.

L = Connector lateral load (Perpendicular to the wall).

S = Connector shear load (Parallel to the wall).

R = L/W for wind perpendicular to the ridge and W/L for wind parallel to the ridge, where W is the building width and L is the building length.

1 Tabulated uplift and lateral loads shall be permitted to be multiplied by 0.75 and 0.92, respectively, for framing not located within 8 feet of building corners.

2 Tabulated uplift loads assume a reduced roof and ceiling assembly dead load of 9 psf (0.6 x 15 psf = 9 psf).

3 Tabulated uplift loads are specified for roof-to-wall connections. When calculating uplift loads for wall-to-wall or wall-to-foundation connections, tabulated uplift values shall be permitted to be reduced by 73 plf (0.60 x 121 plf)

4 Shear connection values shall be multiplied by the following adjustments:

	Wall Height	8'	10'
Roof Pitch	Top Plate to Ridge Height	Adjustment Factor	
≤6:12	0' (flat)	0.40	0.50
	5'	0.65	0.75
	10'	0.90	1.00
>6:12	5'	0.65	0.75
	10'	0.90	1.00
	15'	1.15	1.25
	20'	1.40	1.50

5 For jack rafter uplift connections, use a roof span equal to twice the jack rafter length. The jack rafter length includes the overhang length and the jack span.

Copyright © American Wood Council. Downloaded/printed pursuant to License Agreement. No reproduction or transfer authorized.

Table 3.4 Rafter/Truss Framing to Wall Connection Requirements for Wind Loads (Cont.)

Exposure C

(Dead Load Assumptions: Roof/Ceiling Assembly DL = 15 psf)

Wind Speed 3-second gust (mph) (See Figure 1.1)		110			115			120			130			140		
Rafter/ Truss Spacing (in.)	Roof Span (ft)	Required Capacity of Connection (lbs.)[1]														
		U[2,3,5]	L	S[4]	U[2,3,5]	L	S[4]	U[2,3,5]	L	S[4]	U[2,3,5]	L	S[4]	U[2,3,5]	L	S[4]
12	12	91	110	58R	106	120	63R	122	131	69R	156	154	81R	192	179	94R
	16	109			127			147			188			232		
	20	127			148			171			220			272		
	24	144			170			196			252			312		
	28	162			191			221			284			352		
	32	180			212			245			316			392		
	36	198			233			270			348			433		
16	12	122	147	77R	142	161	84R	163	175	92R	208	205	108R	257	238	125R
	16	145			170			195			250			309		
	20	169			198			228			293			362		
	24	192			226			261			335			416		
	28	216			254			294			378			470		
	32	240			283			327			421			523		
	36	264			311			360			464			577		
19.2	12	146	176	93R	170	193	101R	196	210	110R	250	246	130R	308	286	150R
	16	174			204			234			300			371		
	20	202			237			274			351			435		
	24	231			271			313			403			499		
	28	260			305			353			454			563		
	32	288			339			393			506			628		
	36	317			373			432			557			692		
24	12	183	220	116R	213	241	127R	245	262	138R	312	308	162R	385	357	188R
	16	218			254			293			375			464		
	20	253			297			342			439			544		
	24	289			339			392			503			624		
	28	325			382			441			568			704		
	32	361			424			491			632			785		
	36	397			467			540			697			865		

U = Connector uplift load.

L = Connector lateral load (Perpendicular to the wall).

S = Connector shear load (Parallel to the wall).

R = L/W for wind perpendicular to the ridge and W/L for wind parallel to the ridge, where W is the building width and L is the building length.

1 Tabulated uplift and lateral loads shall be permitted to be multiplied by 0.75 and 0.92, respectively, for framing not located within 8 feet of building corners.

2 Tabulated uplift loads assume a reduced roof and ceiling assembly dead load of 9 psf (0.6 x 15 psf = 9 psf).

3 Tabulated uplift loads are specified for roof-to-wall connections. When calculating uplift loads for wall-to-wall or wall-to-foundation connections, tabulated uplift values shall be permitted to be reduced by 73 plf (0.60 x 121 plf) for each full wall above.

4 Shear connection values shall be multiplied by the following adjustments:

	Wall Height	8'	10'
Roof Pitch	Top Plate to Ridge Height	Adjustment Factor	
≤6:12	0' (flat)	0.40	0.50
	5'	0.65	0.75
	10'	0.90	1.00
>6:12	5'	0.65	0.75
	10'	0.90	1.00
	15'	1.15	1.25
	20'	1.40	1.50

5 For jack rafter uplift connections, use a roof span equal to twice the jack rafter length. The jack rafter length includes the overhang length and the jack span.

Copyright © American Wood Council. Downloaded/printed pursuant to License Agreement. No reproduction or transfer authorized.

Table 3.4 Rafter/Truss Framing to Wall Connection Requirements for Wind Loads (Cont.)

Exposure C

(Dead Load Assumptions: Roof/Ceiling Assembly DL = 15 psf)

Wind Speed 3-second gust (mph) (See Figure 1.1)		150			160			170			180			195		
Rafter/ Truss Spacing (in.)	Roof Span (ft)	Required Capacity of Connection (lbs.)[1]														
		U[2,3,5]	L	S[4]	U[2,3,5]	L	S[4]	U[2,3,5]	L	S[4]	U[2,3,5]	L	S[4]	U[2,3,5]	L	S[4]
12	12	232	205	108R	273	233	123R	318	263	138R	365	295	155R	441	346	182R
	16	280			331			385			442			535		
	20	328			388			452			520			629		
	24	377			446			520			598			724		
	28	426			504			588			676			819		
	32	474			562			655			754			914		
	36	523			620			723			833			1009		
16	12	309	273	144R	365	311	163R	424	351	185R	487	394	207R	588	462	243R
	16	373			441			513			590			713		
	20	437			518			603			693			839		
	24	502			595			693			797			965		
	28	567			672			783			902			1091		
	32	633			749			874			1006			1218		
	36	698			827			965			1110			1345		
19.2	12	371	328	172R	437	373	196R	509	421	221R	584	472	248R	706	554	291R
	16	447			529			616			708			855		
	20	525			621			723			832			1006		
	24	603			714			832			957			1158		
	28	681			806			940			1082			1310		
	32	759			899			1049			1207			1462		
	36	837			992			1157			1333			1614		
24	12	463	410	216R	547	466	245R	636	526	277R	730	590	310R	882	693	364R
	16	559			661			769			884			1069		
	20	656			776			904			1040			1258		
	24	753			892			1039			1196			1447		
	28	851			1008			1175			1352			1637		
	32	949			1124			1311			1509			1827		
	36	1047			1241			1447			1666			2017		

U = Connector uplift load.

L = Connector lateral load (Perpendicular to the wall).

S = Connector shear load (Parallel to the wall).

R = L/W for wind perpendicular to the ridge and W/L for wind parallel to the ridge, where W is the building width and L is the building length.

1 Tabulated uplift and lateral loads shall be permitted to be multiplied by 0.75 and 0.92, respectively, for framing not located within 8 feet of building corners.

2 Tabulated uplift loads assume a reduced roof and ceiling assembly dead load of 9 psf (0.6 x 15 psf = 9 psf).

3 Tabulated uplift loads are specified for roof-to-wall connections. When calculating uplift loads for wall-to-wall or wall-to-foundation connections, tabulated uplift values shall be permitted to be reduced by 73 plf (0.60 x 121 plf) for each full wall above.

4 Shear connection values shall be multiplied by the following adjustments:

	Wall Height	8'	10'
Roof Pitch	Top Plate to Ridge Height	Adjustment Factor	
≤6:12	0' (flat)	0.40	0.50
	5'	0.65	0.75
	10'	0.90	1.00
>6:12	5'	0.65	0.75
	10'	0.90	1.00
	15'	1.15	1.25
	20'	1.40	1.50

5 For jack rafter uplift connections, use a roof span equal to twice the jack rafter length. The jack rafter length includes the overhang length and the jack span.

Copyright © American Wood Council. Downloaded/printed pursuant to License Agreement. No reproduction or transfer authorized.

Table 3.4A Rafter and/or Ceiling Joist to Top Plate Lateral and Shear Connection Requirements

Exposure B

(Prescriptive Alternative to Table 3.4)

Wind Speed 3-second gust (mph) (See Figure 1.1)		90	95	100	105	110	115	120	130	140	150	160	170	180	195
Rafter/Ceiling Joist Spacing (in.)	Wall Height (ft.)	Number of 8d Common Nails or 10d Box Nails (Toenailed) Required in Each Rafter and/or Ceiling Joist to Top Plate Connection[1,2,3,4]													
12	8	2	2	2	2	2	2	2	2	3	3	3	3	3	3
	10	2	2	2	2	2	2	2	2	3	3	3	3	3	3
16	8	2	2	2	2	2	2	3	3	3	3	3	3	3	3
	10	2	2	2	2	2	2	3	3	3	3	3	3	3	4
24	8	3	3	3	3	3	3	4	4	5	5	5	5	5	5
	10	3	3	3	3	3	3	4	4	5	5	5	5	5	6

1 Prescriptive limits are based on assumptions in Table 3.4.

2 When ceiling joists are installed parallel to rafters, the sum of the toenails in the rafter and ceiling joist shall equal or exceed the tabulated number of nails required.

3 To avoid splitting, no more than 2 toenails shall be installed in each side of a rafter or ceiling joist when fastened to a 2x4 top plate or 3 toenails in each side when fastened to a 2x6 top plate.

4 Where top plate-to-ridge heights exceed 10', they shall be adjusted as follows:

Wall Height	8'	10'
Top Plate to Ridge Height (ft)	Adjustment Factor	
10'	1.00	1.00
15'	1.15	1.25
20'	1.40	1.50

Table 3.4A Rafter and/or Ceiling Joist to Top Plate Lateral and Shear Connection Requirements

Exposure C

(Prescriptive Alternative to Table 3.4)

Wind Speed 3-second gust (mph) (See Figure 1.1)		90	95	100	105	110	115	120	130	140	150	160	170	180	195
Rafter/Ceiling Joist Spacing (in.)	Wall Height (ft.)	Number of 8d Common Nails or 10d Box Nails (Toenailed) Required in Each Rafter and/or Ceiling Joist to Top Plate Connection[1,2,3,4]													
12	8	2	2	2	2	2	2	3	3	3	3	3	3	3	3
	10	2	2	2	2	2	2	3	3	3	3	3	3	3	4
16	8	2	2	2	3	3	3	3	3	3	3	3	3	4	4
	10	2	2	2	3	3	3	3	3	3	3	4	4	4	5
24	8	3	3	3	4	4	4	5	5	5	5	5	5	6	6
	10	3	3	3	4	4	4	5	5	5	5	5	6	6	8

1 Prescriptive limits are based on assumptions in Table 3.4.

2 When ceiling joists are installed parallel to rafters, the sum of the toenails in the rafter and ceiling joist shall equal or exceed the tabulated number of nails required.

3 To avoid splitting, no more than 2 toenails shall be installed in each side of a rafter or ceiling joist when fastened to a 2x4 top plate or 3 toenails in each side when fastened to a 2x6 top plate.

4 Where top plate-to-ridge heights exceed 10', they shall be adjusted as follows:

Wall Height	8'	10'
Top Plate to Ridge Height (ft)	Adjustment Factor	
10'	1.00	1.00
15'	1.15	1.25
20'	1.40	1.50

Copyright © American Wood Council. Downloaded/printed pursuant to License Agreement. No reproduction or transfer authorized.

Table 3.4B Shear Walls Resisting Uplift and Shear[1]

(Prescriptive Alternative to Table 3.4)

Exposure B

Wind Speed 3-second gust (mph) (See Figure 1.1)				90	95	100	105	110	115	120	130	140	150	160	170	180	195
Wood Structural Panel Shear Wall Requirements		Top & Bottom of Panel Nailing Requirements		Maximum Roof Span (ft) [2, 3]													
Sheathing Thickness	Shear Wall Nailing	Rows of Nails	Nail Spacing (in)														
7/16" OSB or 15/32" plywood with species of plies having G≥0.49	8d Common Nails @ 4" panel edge spacing and 12" field edge spacing	1 [4]	4	-	-	-	-	-	-	-	-	-	-	-	-	-	-
			3	36	36	36	36	36	32	24	12	-	-	-	-	-	-
		2 [5]	6	36	36	36	36	36	32	24	12	-	-	-	-	-	-
			4	36	36	36	36	36	36	36	36	36	32	28	20	16	12
			3	36	36	36	36	36	36	36	36	36	36	36	36	32	24
7/16" OSB or 15/32" plywood with species of plies having G≥0.49	8d Common Nails @ 6" panel edge spacing and 12" field edge spacing	1 [4]	6	-	-	-	-	-	-	-	-	-	-	-	-	-	-
			4	36	36	36	36	36	32	24	12	-	-	-	-	-	-
			3	36	36	36	36	36	36	36	36	28	20	16	12	-	-
		2 [5]	6	36	36	36	36	36	36	36	36	28	20	16	12	-	-
			4	36	36	36	36	36	36	36	36	36	36	36	32	24	20
			3	36	36	36	36	36	36	36	36	36	36	36	36	36	32
15/32" OSB or plywood with species of plies having G≥0.49	10d Common Nails @ 6" panel edge spacing and 12" field edge spacing	1 [4]	6	-	-	-	-	-	-	-	-	-	-	-	-	-	-
			4	36	36	36	36	36	36	28	20	12	-	-	-	-	-
			3	36	36	36	36	36	36	36	36	36	24	20	16	12	-
		2 [5]	6	36	36	36	36	36	36	36	36	36	24	20	16	12	-
			4	36	36	36	36	36	36	36	36	36	36	36	36	32	24
			3	36	36	36	36	36	36	36	36	36	36	36	36	36	36

1 See *AWC/ANSI Special Design Provisions for Wind and Seismic (SDPWS)* for proper design and detailing of wood structural panels used to resist combined shear and uplift from wind.

2 Where framing has a specific gravity of 0.49 or greater, tabulated maximum roof spans shall be permitted to be multiplied by 1.08, but in no case shall they exceed a span of 36 ft.

3 Tabulated values for plywood assume plywood with a species of plies having a specific gravity of 0.49 or greater. For plywood with other species, multiply the tabulated maximum roof spans by 0.90.

4 Wood structural panels shall overlap the top member of the double top plate and bottom plate by 1½" and a single row of fasteners shall be placed ¾" from the panel edge.

5 Wood structural panels shall overlap the top member of the double top plate and bottom plate by 1½". Rows of fasteners shall be ½" apart with a minimum edge distance of ½". Each row shall have nails at the specified spacing.

Copyright © American Wood Council. Downloaded/printed pursuant to License Agreement. No reproduction or transfer authorized.
AMERICAN WOOD COUNCIL

Table 3.4B Shear Walls Resisting Uplift and Shear[1]

(Prescriptive Alternative to Table 3.4)

Exposure C

Wind Speed 3-second gust (mph) (See Figure 1.1)				90	95	100	105	110	115	120	130	140	150	160	170	180	195
Wood Structural Panel Shear Wall Requirements		Top & Bottom of Panel Nailing Requirements		Maximum Roof Span (ft) [2, 3]													
Sheathing Thickness	Shear Wall Nailing	Rows of Nails	Nail Spacing (in)														
7/16" OSB or 15/32" plywood with species of plies having G≥0.49	8d Common Nails @ 4" panel edge spacing and 12" field edge spacing	1 [4]	4	-	-	-	-	-	-	-	-	-	-	-	-	-	-
			3	36	36	24	20	12	12	-	-	-	-	-	-	-	-
		2 [5]	6	36	36	24	20	12	12	-	-	-	-	-	-	-	-
			4	36	36	36	36	36	36	36	32	24	16	12	12	-	-
			3	36	36	36	36	36	36	36	36	36	36	28	24	20	16
7/16" OSB or 15/32" plywood with species of plies having G≥0.49	8d Common Nails @ 6" panel edge spacing and 12" field edge spacing	1 [4]	6	-	-	-	-	-	-	-	-	-	-	-	-	-	-
			4	36	36	24	20	12	12	-	-	-	-	-	-	-	-
			3	36	36	36	36	36	32	24	16	12	-	-	-	-	-
		2 [5]	6	36	36	36	36	36	32	24	16	12	-	-	-	-	-
			4	36	36	36	36	36	36	36	36	32	28	20	16	12	-
			3	36	36	36	36	36	36	36	36	36	36	36	28	24	20
15/32" OSB or plywood with species of plies having G≥0.49	10d Common Nails @ 6" panel edge spacing and 12" field edge spacing	1 [4]	6	-	-	-	-	-	-	-	-	-	-	-	-	-	-
			4	36	36	32	24	20	16	12	-	-	-	-	-	-	-
			3	36	36	36	36	36	36	32	24	16	12	-	-	-	-
		2 [5]	6	36	36	36	36	36	36	32	24	16	12	-	-	-	-
			4	36	36	36	36	36	36	36	36	36	36	28	24	20	12
			3	36	36	36	36	36	36	36	36	36	36	36	36	32	24

1 See *AWC/ANSI Special Design Provisions for Wind and Seismic (SDPWS)* for proper design and detailing of wood structural panels used to resist combined shear and uplift from wind.

2 Where framing has a specific gravity of 0.49 or greater, tabulated maximum roof spans shall be permitted to be multiplied by 1.08, but in no case shall they exceed a span of 36 ft.

3 Tabulated values for plywood assume plywood with a species of plies having a specific gravity of 0.49 or greater. For plywood with other species, multiply the tabulated maximum roof spans by 0.90.

4 Wood structural panels shall overlap the top member of the double top plate and bottom plate by 1½" and a single row of fasteners shall be placed ¾" from the panel edge.

5 Wood structural panels shall overlap the top member of the double top plate and bottom plate by 1½". Rows of fasteners shall be ½" apart with a minimum edge distance of ½". Each row shall have nails at the specified spacing.

Copyright © American Wood Council. Downloaded/printed pursuant to License Agreement. No reproduction or transfer authorized.

Table 3.4C Rake Overhang Outlooker Uplift Connection Requirements

Exposure B

Wind Speed 3-second gust (mph) (See Figure 1.1)		90	95	100	105	110	115	120	130	140	150	160	170	180	195
Overhang Span (in.)	**Outlooker Spacing (in.)**	**Uplift Connection Load (lbs)[1]**													
12	**12**	86	96	104	117	129	140	153	180	208	239	272	308	344	404
	16	115	128	139	156	172	187	204	240	278	319	363	411	459	539
	24	172	192	208	234	257	281	306	359	416	478	544	616	688	-
16	**12**	108	121	131	147	162	177	192	226	262	300	342	387	432	508
	16	144	161	175	196	216	235	256	301	349	401	456	516	576	677[2]
	24	216	241	262	295	323	353	385	452	523	601	683	774	-	-
19.2	**12**	128	142	155	174	191	208	227	266	309	354	403	456[2]	510[2]	599[3]
	16	170	190	207	231	254	278	302	355	411	472	537	608[2]	680[2]	798[3]
	24	255	284	310	347	381	416	453	533	617	708	806[2]	-	-	-
24	**12**	159	178	194	217	238	260	283	333	386[2]	443[3]	503[4]	570[4]	637[4]	748[4]
	16	213	237	259	289	318	347	378	444	514[2]	590[3]	671[4]	760[4]	849[4]	-
	24	319	355	389	434	476	520	567	665[2]	771[2]	-	-	-	-	-

1 Uplift connection load based on connector located on inside face of 2x4 end wall and is not applicable for connector located on inside face of walls with framing members larger than 2x4. It shall be permitted to locate the connector on the outside face of walls with 2x4 and larger framing.

2 Wood structural panel sheathing with minimum 24/16 span rating required (minimum 7/16" nominal thickness).

3 Wood structural panel sheathing with minimum 32/16 span rating required (minimum 15/32" nominal thickness).

4 Wood structural panel sheathing with minimum 40/20 span rating required (minimum 19/32" nominal thickness).

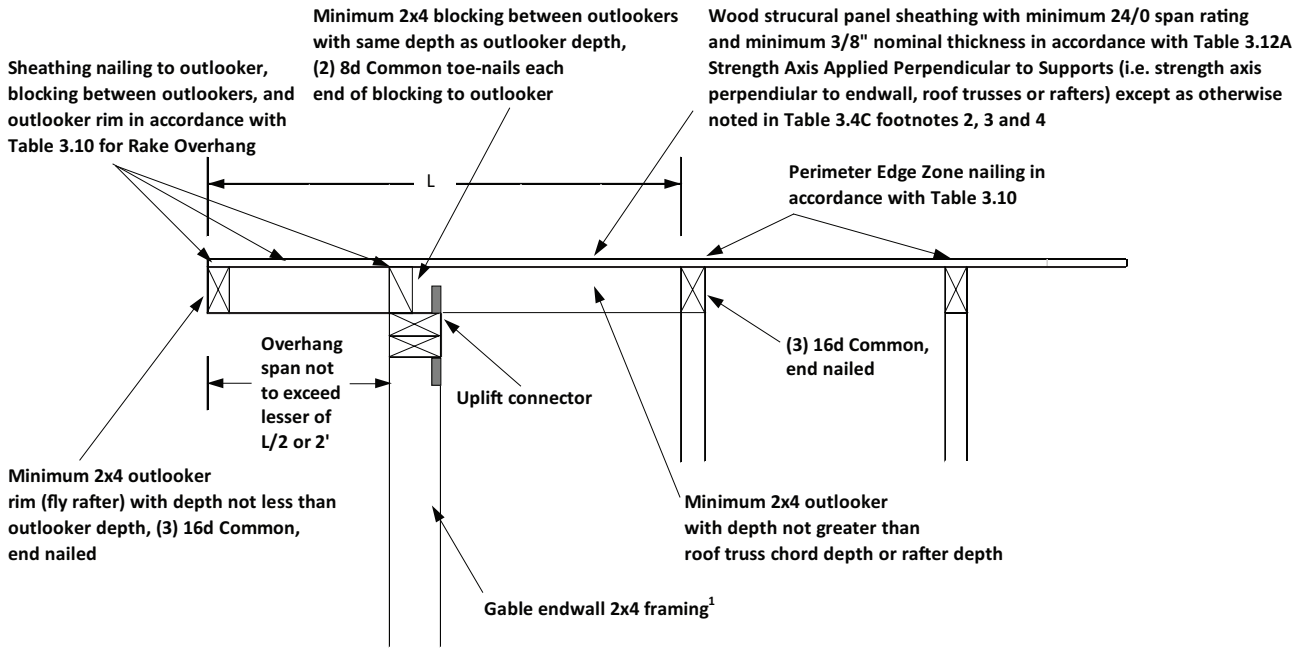

Copyright © American Wood Council. Downloaded/printed pursuant to License Agreement. No reproduction or transfer authorized.

Table 3.4C Rake Overhang Outlooker Uplift Connection Requirements

Exposure C

Wind Speed 3-second gust (mph) (See Figure 1.1)		90	95	100	105	110	115	120	130	140	150	160	170	180	195
Overhang Span (in.)	**Outlooker Spacing (in.)**	**Uplift Connection Load (lbs)[1]**													
12	**12**	120	133	144	163	179	195	213	250	289	332	378	428	478	561
	16	160	178	193	217	238	260	284	333	386	443	504	571	637	-
	24	239	267	289	326	358	391	425	500	579	664	-	-	-	-
16	**12**	150	168	182	205	225	245	267	314	364	418	475	538[2]	601[2]	706[3]
	16	201	224	243	273	300	327	356	419	485	557	633[2]	717[2]	801[2]	-
	24	301	335	365	409	450	491	535	628	728	-	-	-	-	-
19.2	**12**	177	198	216	241	265	289	315	370	429[2]	492[2]	560[3]	634[4]	708[4]	832[4]
	16	236	264	288	322	353	386	420	493	572[2]	656[2]	747[3]	846[4]	-	-
	24	355	395	431	483	530	579	630	740	858[2]	-	-	-	-	-
24	**12**	222	247	270	302	331	362[2]	394[2]	462[3]	536[4]	615[4]	700[4]	793[4]	-	-
	16	296	329	360	402	442	482[2]	525[2]	617[3]	715[4]	820[4]	-	-	-	-
	24	443	494	541	603	662[2]	723[2]	788[2]	-	-	-	-	-	-	-

1 Uplift connection load based on connector located on inside face of 2x4 end wall and is not applicable for connector located on inside face of walls with framing members larger than 2x4. It shall be permitted to locate the connector on the outside face of walls with 2x4 and larger framing.

2 Wood structural panel sheathing with minimum 24/16 span rating required (minimum 7/16" nominal thickness).

3 Wood structural panel sheathing with minimum 32/16 span rating required (minimum 15/32" nominal thickness).

4 Wood structural panel sheathing with minimum 40/20 span rating required (minimum 19/32" nominal thickness).

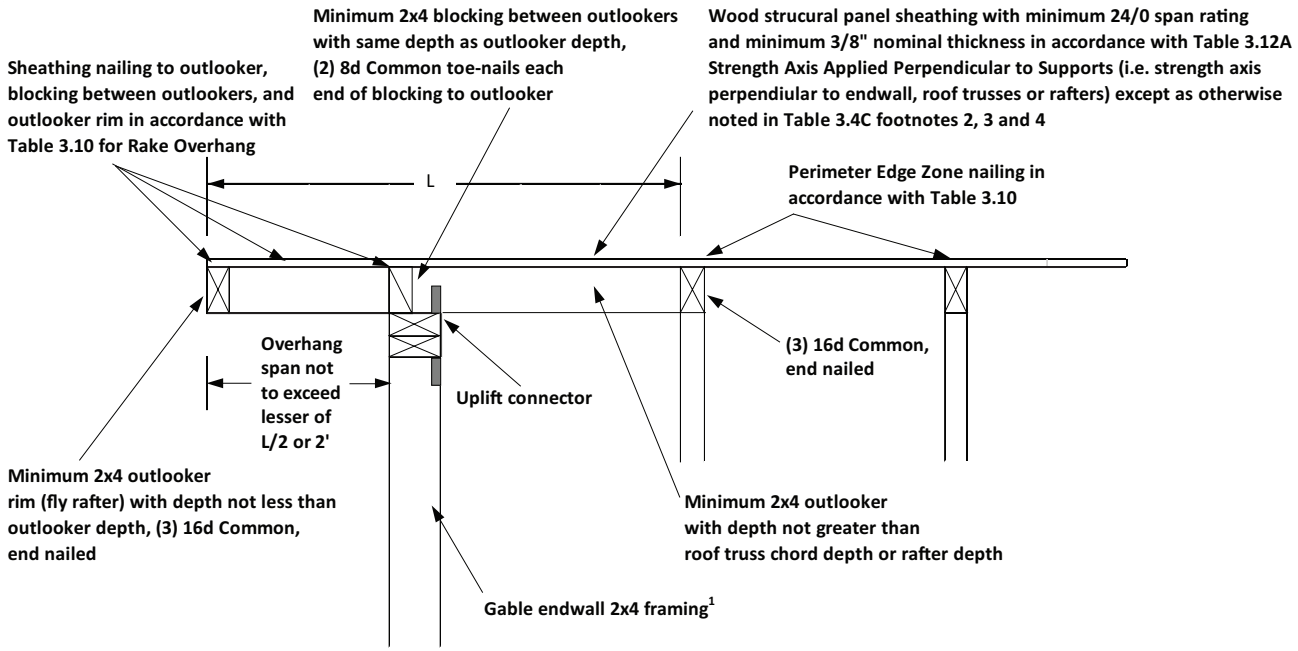

Copyright © American Wood Council. Downloaded/printed pursuant to License Agreement. No reproduction or transfer authorized.

Table 3.5 Top and Bottom Plate to Stud Lateral Connection Requirements for Wind Loads

Exposure B

Wind Speed 3-second gust (mph) (See Figure 1.1)	90	95	100	105	110	115	120	130	140	150	160	170	180	195
Wall Height (ft)	**Unit Framing Loads (plf)[1,2]**													
8	45	50	55	61	67	73	79	93	108	124	141	159	178	209
10	53	59	66	72	79	87	94	111	129	148	168	190	212	249
12	61	68	76	83	91	100	109	128	148	170	193	218	245	287
14	69	77	85	94	103	112	122	144	167	191	218	246	275	323
16	77	85	94	104	114	124	135	159	184	212	241	272	305	358
18	86	93	103	113	124	136	148	174	201	231	263	297	333	391
20	96	100	111	123	135	147	160	188	218	250	285	321	360	423

1 Tabulated framing loads and connection requirements shall be permitted to be multiplied by 0.92 for framing not located within 8 feet of corners.

2 Tabulated framing loads are specified in pounds per linear foot of wall. To determine connection requirements (lbs), multiply the tabulated unit lateral framing load by the multiplier from the table below corresponding to the spacing of the connection:

Connection Spacing (in.)	12	16	19.2	24	48
Multiplier	1.00	1.33	1.60	2.00	4.00

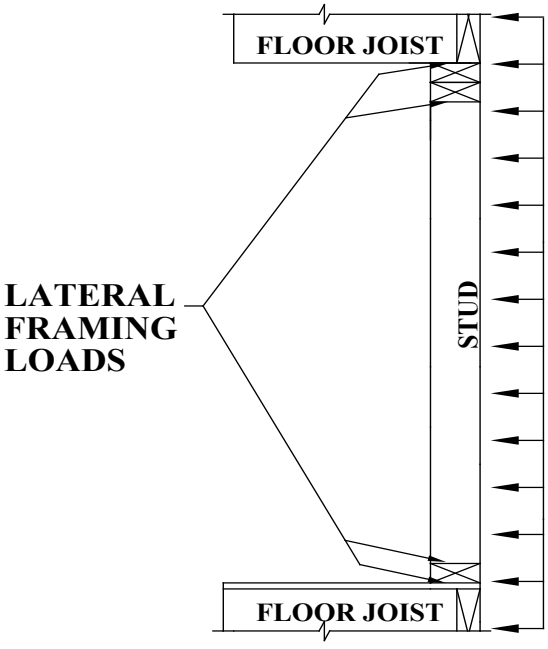

Copyright © American Wood Council. Downloaded/printed pursuant to License Agreement. No reproduction or transfer authorized.

Table 3.5 Top and Bottom Plate to Stud Lateral Connection Requirements for Wind Loads

Exposure C

Wind Speed 3-second gust (mph) (See Figure 1.1)	90	95	100	105	110	115	120	130	140	150	160	170	180	195
Wall Height (ft)	**Unit Framing Loads (plf)[1,2]**													
8	62	69	76	84	92	101	110	129	150	172	196	221	248	291
10	74	82	91	100	110	120	131	154	179	205	233	263	295	346
12	85	95	105	116	127	139	151	177	206	236	269	303	340	399
14	96	107	118	130	143	156	170	200	231	266	302	341	383	449
16	106	118	131	144	158	173	188	221	256	294	335	378	423	497
18	116	129	143	157	173	189	206	241	280	321	365	413	463	543
20	125	139	154	170	187	204	222	261	303	347	395	446	500	587

1 Tabulated framing loads and connection requirements shall be permitted to be multiplied by 0.92 for framing not located within 8 feet of corners.

2 Tabulated framing loads are specified in pounds per linear foot of wall. To determine connection requirements (lbs), multiply the tabulated unit lateral framing load by the multiplier from the table below corresponding to the spacing of the connection:

Connection Spacing (in.)	12	16	19.2	24	48
Multiplier	1.00	1.33	1.60	2.00	4.00

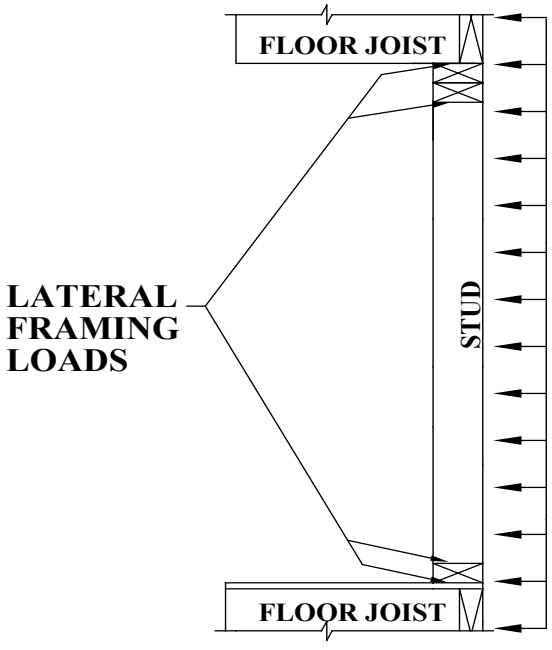

Copyright © American Wood Council. Downloaded/printed pursuant to License Agreement. No reproduction or transfer authorized.

Table 3.5A Top and Bottom Plate to Stud Lateral Connections for Wind Loads

(Prescriptive Alternative to Table 3.5)

Exposure B

Wind Speed 3-second gust (mph) (See Figure 1.1)		90	95	100	105	110	115	120	130	140	150	160	170	180	195
Stud Spacing (in.)	**Wall Height (ft)**	**Required Number of 16d Common Nails or 40d Box Nails per Stud to Plate Connection (plf)[1]**													
12	8	2	2	2	2	2	2	2	2	2	2	2	2	2	2
	10	2	2	2	2	2	2	2	2	2	2	2	2	2	2
	12	2	2	2	2	2	2	2	2	2	2	2	2	2	2
	14	2	2	2	2	2	2	2	2	2	2	2	2	2	3
	16	2	2	2	2	2	2	2	2	2	2	2	2	2	3
	18	2	2	2	2	2	2	2	2	2	2	2	2	3	3
	20	2	2	2	2	2	2	2	2	2	2	2	3	3	3
16	8	2	2	2	2	2	2	2	2	2	2	2	2	2	2
	10	2	2	2	2	2	2	2	2	2	2	2	2	2	3
	12	2	2	2	2	2	2	2	2	2	2	2	2	3	3
	14	2	2	2	2	2	2	2	2	2	2	2	3	3	3
	16	2	2	2	2	2	2	2	2	2	2	3	3	3	4
	18	2	2	2	2	2	2	2	2	2	3	3	3	4	4
	20	2	2	2	2	2	2	2	2	2	3	3	3	4	5
24	8	2	2	2	2	2	2	2	2	2	2	2	3	3	3
	10	2	2	2	2	2	2	2	2	2	2	3	3	3	4
	12	2	2	2	2	2	2	2	2	2	3	3	4	4	5
	14	2	2	2	2	2	2	2	2	3	3	4	4	4	5
	16	2	2	2	2	2	2	2	3	3	3	4	4	5	6
	18	2	2	2	2	2	2	2	3	3	4	4	5	5	6
	20	2	2	2	2	2	2	3	3	4	4	5	5	6	7

1 Prescriptive limits are based on assumptions in Table 3.5.

Copyright © American Wood Council. Downloaded/printed pursuant to License Agreement. No reproduction or transfer authorized.

Table 3.5A Top and Bottom Plate to Stud Lateral Connections for Wind Loads

Exposure C

(Prescriptive Alternative to Table 3.5)

Wind Speed 3-second gust (mph) (See Figure 1.1)		90	95	100	105	110	115	120	130	140	150	160	170	180	195
Stud Spacing (in.)	**Wall Height (ft)**	**Required Number of 16d Common Nails or 40d Box Nails per Stud to Plate Connection (plf)[1]**													
12	**8**	2	2	2	2	2	2	2	2	2	2	2	2	2	2
	10	2	2	2	2	2	2	2	2	2	2	2	2	2	3
	12	2	2	2	2	2	2	2	2	2	2	2	2	3	3
	14	2	2	2	2	2	2	2	2	2	2	2	3	3	4
	16	2	2	2	2	2	2	2	2	2	2	3	3	3	4
	18	2	2	2	2	2	2	2	2	2	3	3	3	4	4
	20	2	2	2	2	2	2	2	2	2	3	3	4	4	5
16	**8**	2	2	2	2	2	2	2	2	2	2	2	2	3	3
	10	2	2	2	2	2	2	2	2	2	2	3	3	3	4
	12	2	2	2	2	2	2	2	2	2	3	3	3	4	4
	14	2	2	2	2	2	2	2	2	3	3	3	4	4	5
	16	2	2	2	2	2	2	2	2	3	3	4	4	5	5
	18	2	2	2	2	2	2	2	3	3	3	4	4	5	6
	20	2	2	2	2	2	2	2	3	3	4	4	5	5	6
24	**8**	2	2	2	2	2	2	2	2	2	3	3	4	4	5
	10	2	2	2	2	2	2	2	3	3	3	4	4	5	6
	12	2	2	2	2	2	2	2	3	3	4	4	5	5	6
	14	2	2	2	2	2	3	3	3	4	4	5	5	6	7
	16	2	2	2	2	3	3	3	4	4	5	5	6	7	8
	18	2	2	2	3	3	3	3	4	4	5	6	7	7	9
	20	2	2	3	3	3	3	4	4	5	6	6	7	8	9

1 Prescriptive limits are based on assumptions in Table 3.5.

Copyright © American Wood Council. Downloaded/printed pursuant to License Agreement. No reproduction or transfer authorized.

Table 3.6 Ridge Connection Requirements for Wind

(Dead Load Assumptions: Roof Assembly DL = 10 psf)

Exposure B

Wind Speed 3-second gust (mph) (See Figure 1.1)		90	95	100	105	110	115	120	130	140	150	160	170	180	195
Roof Pitch	**Roof Span (ft)**	**Required Capacity of Ridge Connection (plf)[1,2,3,4]**													
3:12	**12**	28	39	51	64	77	91	105	136	169	205	243	284	327	397
	16	37	52	68	85	103	121	141	182	226	274	325	379	436	529
	20	46	65	85	106	128	152	176	227	282	342	406	473	545	661
	24	56	78	102	128	154	182	211	272	339	410	487	568	654	793
	28	65	91	119	149	180	212	246	318	395	479	568	663	763	925
	32	74	105	137	170	206	243	281	363	452	547	649	758	873	1057
	36	83	118	154	192	231	273	316	409	508	616	730	852	982	1190
4:12	**12**	26	35	45	55	65	77	88	113	139	168	199	231	266	321
	16	35	47	60	73	87	102	118	150	186	224	265	308	354	428
	20	43	58	75	91	109	128	147	188	232	280	331	385	443	536
	24	52	70	89	110	131	153	176	226	279	336	397	463	532	643
	28	61	82	104	128	153	179	206	263	325	392	464	540	620	750
	32	69	94	119	146	174	204	235	301	372	448	530	617	709	857
	36	78	105	134	164	196	230	264	338	418	504	596	694	797	964
5:12	**12**	20	27	35	43	51	60	69	88	109	132	156	182	209	253
	16	26	36	46	57	68	80	92	118	146	176	208	242	279	337
	20	33	45	58	71	85	100	115	147	182	220	260	303	348	421
	24	40	54	69	85	102	119	138	177	219	264	312	364	418	506
	28	46	63	81	99	119	139	161	206	255	308	364	424	488	590
	32	53	72	92	114	136	159	184	236	292	352	416	485	557	674
	36	60	81	104	128	153	179	207	265	328	396	468	545	627	758
6:12	**12**	20	26	33	40	48	55	63	81	99	119	141	164	188	227
	16	27	35	44	54	63	74	85	108	133	159	188	218	250	302
	20	33	44	55	67	79	92	106	135	166	199	235	273	313	378
	24	40	53	66	80	95	111	127	162	199	239	282	327	376	453
	28	47	61	77	94	111	129	148	188	232	279	329	382	438	529
	32	53	70	88	107	127	148	169	215	265	319	376	436	501	605
	36	60	79	99	121	143	166	190	242	298	358	423	491	564	680
7:12-12:12	**12**	27	32	37	43	49	55	62	76	94	112	132	153	175	211
	16	36	43	50	57	65	73	82	102	125	149	176	204	233	281
	20	45	53	62	72	81	92	103	127	156	187	220	254	291	351
	24	54	64	75	86	98	110	123	153	187	224	263	305	350	421
	28	62	74	87	100	114	129	144	178	218	261	307	356	408	491
	32	71	85	99	115	130	147	164	204	250	299	351	407	466	562
	36	80	96	112	129	147	165	185	229	281	336	395	458	525	632

1 Tabulated connection requirements shall be permitted to be multiplied by 0.70 for framing not located within 8 feet of building corners.

2 Tabulated connection requirements are based on total uplift minus the roof assembly dead load of 6 psf (0.6 x 10 psf = 6 psf).

3 Tabulated connection requirements are based on a 12 inch ridge connection spacing, for different ridge connection spacing, multiply the tabulated values by the appropriate multiplier below:

Ridge Connection Spacing (in.)	12	16	19.2	24	48
Multiplier	1.00	1.33	1.60	2.00	4.00

4 For jack rafter uplift connections, use a roof span equal to twice the jack rafter length. The jack rafter length includes the overhang length and the jack span.

Copyright © American Wood Council. Downloaded/printed pursuant to License Agreement. No reproduction or transfer authorized.

Table 3.6 Ridge Connection Requirements for Wind

(Dead Load Assumptions: Roof Assembly DL = 10 psf)

Exposure C

Wind Speed 3-second gust (mph) (See Figure 1.1)		90	95	100	105	110	115	120	130	140	150	160	170	180	195
Roof Pitch	**Roof Span (ft)**	**Required Capacity of Ridge Connection (plf)[1,2,3,4]**													
3:12	**12**	67	82	99	117	135	154	174	217	263	313	366	423	482	579
	16	89	110	132	156	180	206	233	290	351	417	488	563	643	772
	20	111	137	165	194	225	257	291	362	439	522	610	704	804	965
	24	133	165	198	233	270	309	349	434	527	626	732	845	965	1157
	28	155	192	231	272	315	360	407	507	615	730	854	986	1126	1350
	32	178	220	264	311	360	412	465	579	702	835	976	1127	1287	1543
	36	200	247	297	350	405	463	523	652	790	939	1098	1268	1447	1736
4:12	**12**	57	70	83	97	112	127	143	178	215	254	297	342	390	467
	16	76	93	111	130	149	170	191	237	286	339	396	456	520	623
	20	95	116	138	162	186	212	239	296	358	424	495	570	650	779
	24	114	139	166	194	224	255	287	355	429	509	594	684	780	935
	28	133	163	194	227	261	297	335	415	501	594	693	798	910	1090
	32	152	186	222	259	298	339	382	474	573	679	792	912	1040	1246
	36	171	209	249	291	336	382	430	533	644	763	891	1027	1170	1402
5:12	**12**	44	54	65	76	88	100	112	140	169	200	234	269	307	368
	16	59	73	87	101	117	133	150	186	225	267	311	359	409	491
	20	74	91	108	127	146	166	187	233	281	333	389	449	512	613
	24	89	109	130	152	175	200	225	279	337	400	467	539	614	736
	28	104	127	151	177	204	233	262	326	394	467	545	628	717	858
	32	118	145	173	203	234	266	300	372	450	534	623	718	819	981
	36	133	163	195	228	263	299	337	419	506	600	701	808	921	1104
6:12	**12**	42	51	60	70	80	91	102	126	152	180	210	241	275	329
	16	56	67	80	93	107	121	136	168	203	240	280	322	367	439
	20	70	84	100	116	134	152	170	210	253	300	349	402	458	548
	24	83	101	120	140	160	182	204	252	304	360	419	483	550	658
	28	97	118	140	163	187	212	238	294	355	420	489	563	641	767
	32	111	135	160	186	214	242	272	336	406	480	559	644	733	877
	36	125	152	180	209	240	273	307	379	456	540	629	724	825	987
7:12-12:12	**12**	44	51	59	67	76	86	96	118	142	168	195	224	255	304
	16	59	68	78	89	101	114	128	158	189	223	260	299	340	406
	20	74	85	98	111	126	143	160	197	237	279	325	373	425	507
	24	88	103	118	133	152	172	192	236	284	335	390	448	510	609
	28	103	120	137	155	177	200	224	276	331	391	455	523	595	710
	32	118	137	157	178	202	229	256	315	379	447	520	597	680	812
	36	133	154	176	200	228	257	288	355	426	503	585	672	765	913

1 Tabulated connection requirements shall be permitted to be multiplied by 0.70 for framing not located within 8 feet of building corners.

2 Tabulated connection requirements are based on total uplift minus the roof assembly dead load of 6 psf (0.6 x 10 psf = 6 psf).

3 Tabulated connection requirements are based on a 12 inch ridge connection spacing, for different ridge connection spacing, multiply the tabulated values by the appropriate multiplier below:

Ridge Connection Spacing (in.)	12	16	19.2	24	48
Multiplier	1.00	1.33	1.60	2.00	4.00

4 For jack rafter uplift connections, use a roof span equal to twice the jack rafter length. The jack rafter length includes the overhang length and the jack span.

Copyright © American Wood Council. Downloaded/printed pursuant to License Agreement. No reproduction or transfer authorized.

Table 3.7 Header Connection Requirements for Wind

(Dead Load Assumptions: Roof Assembly DL = 15 psf)

Exposure B

Wind Speed 3- second gust (mph) (See Figure 1.1)		90		95		100		105		110		115		120		130		140		150		160		170		180		195	
Roof Span (ft)	Header Span (ft)	Required Capacity of Connection at Each End of Header (lbs)[1]																											
		U[2,3,4]	L	U[2,3,4]	L	U[2,3,4]	L	U[2,3,4]	L	U[2,3,4]	L	U[2,3,4]	L	U[2,3,4]	L	U[2,3,4]	L	U[2,3,4]	L	U[2,3,4]	L	U[2,3,4]	L	U[2,3,4]	L	U[2,3,4]	L	U[2,3,4]	L
12	2	8	53	17	59	27	66	37	72	48	79	59	87	70	94	95	111	122	129	151	148	181	168	214	190	248	212	304	249
	4	16	106	35	118	54	131	74	145	95	159	118	173	141	189	190	222	244	257	301	295	362	336	428	379	497	425	608	499
	6	24	159	52	178	81	197	111	217	143	238	176	260	211	283	285	333	366	386	452	443	544	504	641	569	745	637	912	748
	8	32	212	69	237	108	262	148	289	191	317	235	347	282	378	381	443	487	514	602	590	725	672	855	758	994	850	1216	998
	10	41	266	86	296	134	328	185	362	238	397	294	434	352	472	476	554	609	643	753	738	906	839	1069	948	1242	1062	1520	1247
	12	49	319	104	355	161	394	222	434	286	476	353	520	422	567	571	665	731	771	903	885	1087	1007	1283	1137	1491	1275	1824	1496
	14	57	372	121	414	188	459	259	506	334	555	412	607	493	661	666	776	853	900	1054	1033	1268	1175	1497	1327	1739	1487	2128	1746
	16	65	425	138	474	215	525	296	578	381	635	470	694	563	756	761	887	975	1028	1204	1181	1449	1343	1710	1516	1987	1700	2432	1995
	18	73	478	155	533	242	590	333	651	429	714	529	781	634	850	856	998	1097	1157	1355	1328	1631	1511	1924	1706	2236	1912	2736	2244
	20	81	531	173	592	269	656	370	723	477	794	588	867	704	944	951	1108	1218	1285	1505	1476	1812	1679	2138	1895	2484	2125	3041	2494
24	2	6	53	21	59	37	66	53	72	71	79	89	87	108	94	149	111	193	129	240	148	290	168	344	190	401	212	492	249
	4	11	106	41	118	73	131	106	145	141	159	178	173	216	189	297	222	385	257	479	295	580	336	688	379	801	425	984	499
	6	17	159	62	178	110	197	160	217	212	238	267	260	324	283	446	333	578	386	719	443	870	504	1031	569	1202	637	1476	748
	8	23	212	83	237	146	262	213	289	283	317	356	347	432	378	595	443	770	514	959	590	1161	672	1375	758	1603	850	1968	998
	10	28	266	104	296	183	328	266	362	353	397	445	434	540	472	744	554	963	643	1199	738	1451	839	1719	948	2003	1062	2460	1247
	12	34	319	124	355	219	394	319	434	424	476	534	520	648	567	892	665	1156	771	1438	885	1741	1007	2063	1137	2404	1275	2953	1496
	14	40	372	145	414	256	459	372	506	495	555	623	607	757	661	1041	776	1348	900	1678	1033	2031	1175	2406	1327	2805	1487	3445	1746
	16	45	425	166	474	292	525	426	578	565	635	712	694	865	756	1190	887	1541	1028	1918	1181	2321	1343	2750	1516	3205	1700	3937	1995
	18	51	478	186	533	329	590	479	651	636	714	801	781	973	850	1338	998	1733	1157	2158	1328	2611	1511	3094	1706	3606	1912	4429	2244
	20	57	531	207	592	366	656	532	723	707	794	890	867	1081	944	1487	1108	1926	1285	2397	1476	2901	1679	3438	1895	4007	2125	4921	2494
36	2	4	53	25	59	47	66	70	72	94	79	120	87	146	94	203	111	264	129	330	148	400	168	475	190	555	212	682	249
	4	7	106	49	118	93	131	140	145	189	159	240	173	293	189	406	222	529	257	660	295	801	336	950	379	1109	425	1364	499
	6	11	159	74	178	140	197	210	217	283	238	360	260	439	283	609	333	793	386	990	443	1201	504	1426	569	1664	637	2046	748
	8	15	212	98	237	187	262	280	289	377	317	479	347	586	378	813	443	1058	514	1321	590	1602	672	1901	758	2218	850	2728	998
	10	18	266	123	296	234	328	350	362	472	397	599	434	732	472	1016	554	1322	643	1651	738	2002	839	2376	948	2773	1062	3411	1247
	12	22	319	148	355	280	394	420	434	566	476	719	520	879	567	1219	665	1586	771	1981	885	2402	1007	2851	1137	3328	1275	4093	1496
	14	26	372	172	414	327	459	490	506	660	555	839	607	1025	661	1422	776	1851	900	2311	1033	2803	1175	3327	1327	3882	1487	4775	1746
	16	29	425	197	474	374	525	560	578	755	635	959	694	1172	756	1625	887	2115	1028	2641	1181	3203	1343	3802	1516	4437	1700	5457	1995
	18	33	478	222	533	421	590	630	651	849	714	1079	781	1318	850	1828	998	2379	1157	2971	1328	3604	1511	4277	1706	4991	1912	6139	2244
	20	36	531	246	592	467	656	700	723	943	794	1198	867	1465	944	2032	1108	2644	1285	3301	1476	4004	1679	4752	1895	5546	2125	6821	2494

U = Connector uplift load.
L = Connector lateral load (perpendicular to the wall).

1 Tabulated uplift and lateral connection requirements shall be permitted to be multiplied by 0.75 and 0.92, respectively, for framing not located within 8 feet of building corners.

2 Tabulated connection requirements assume a roof assembly dead load of 9 psf (0.6 x 15 psf = 9 psf).

3 Tabulated uplift loads are specified for headers supporting a roof assembly. When calculating uplift loads for headers supporting floor loads, the tabulated uplift loads shall be permitted to be reduced by 36 plf times the header span for each full wall above.

4 For jack rafter uplift connections, use a roof span equal to twice the jack rafter length. The jack rafter length includes the overhang length and the jack span.

Copyright © American Wood Council. Downloaded/printed pursuant to License Agreement. No reproduction or transfer authorized.
AMERICAN WOOD COUNCIL

Table 3.7 Header Connection Requirements for Wind

(Dead Load Assumptions: Roof Assembly DL = 15 psf)

Exposure C

Wind Speed 3- second gust (mph) (See Figure 1.1)		90		95		100		105		110		115		120		130		140		150		160		170		180		195	
		Required Capacity of Connection at Each End of Header (lbs)[1]																											
Roof Span (ft)	Header Span (ft)	U[2,3,4]	L	U[2,3,4]	L	U[2,3,4]	L	U[2,3,4]	L	U[2,3,4]	L	U[2,3,4]	L	U[2,3,4]	L	U[2,3,4]	L	U[2,3,4]	L	U[2,3,4]	L	U[2,3,4]	L	U[2,3,4]	L	U[2,3,4]	L	U[2,3,4]	L
12	2	39	74	52	82	65	91	79	100	94	110	110	120	126	131	160	154	197	179	237	205	280	233	325	263	373	295	450	346
	4	79	148	104	164	131	182	159	201	188	220	219	241	252	262	320	308	394	357	474	410	559	466	650	526	746	590	901	693
	6	118	221	156	247	196	273	238	301	283	331	329	361	377	394	480	462	592	536	711	615	839	700	975	790	1119	885	1351	1039
	8	157	295	208	329	261	364	318	402	377	441	439	482	503	525	641	616	789	714	948	820	1119	933	1300	1053	1492	1181	1801	1385
	10	196	369	260	411	327	455	397	502	471	551	548	602	629	656	801	770	986	893	1185	1025	1398	1166	1625	1316	1865	1476	2251	1732
	12	236	443	312	493	392	547	477	603	565	661	658	723	755	787	961	924	1183	1071	1422	1230	1678	1399	1950	1579	2238	1771	2702	2078
	14	275	516	364	575	457	638	556	703	659	772	768	843	881	918	1121	1078	1381	1250	1659	1435	1957	1632	2275	1843	2611	2066	3152	2425
	16	314	590	416	658	523	729	635	803	754	882	877	964	1006	1049	1281	1232	1578	1428	1896	1640	2237	1865	2600	2106	2984	2361	3602	2771
	18	353	664	468	740	588	820	715	904	848	992	987	1084	1132	1181	1441	1385	1775	1607	2133	1845	2517	2099	2925	2369	3357	2656	4053	3117
	20	393	738	520	822	654	911	794	1004	942	1102	1097	1205	1258	1312	1601	1539	1972	1785	2371	2049	2796	2332	3250	2632	3730	2951	4503	3464
24	2	57	74	78	82	100	91	123	100	147	110	173	120	199	131	256	154	316	179	382	205	452	233	526	263	605	295	732	346
	4	114	148	156	164	200	182	246	201	294	220	345	241	398	262	511	308	633	357	764	410	904	466	1053	526	1211	590	1465	693
	6	171	221	233	247	299	273	369	301	442	331	518	361	597	394	767	462	949	536	1146	615	1356	700	1579	790	1816	885	2197	1039
	8	227	295	311	329	399	364	492	402	589	441	690	482	796	525	1022	616	1266	714	1528	820	1808	933	2106	1053	2422	1181	2930	1385
	10	284	369	389	411	499	455	615	502	736	551	863	602	996	656	1278	770	1582	893	1910	1025	2260	1166	2632	1316	3027	1476	3662	1732
	12	341	443	467	493	599	547	737	603	883	661	1035	723	1195	787	1533	924	1899	1071	2292	1230	2712	1399	3159	1579	3633	1771	4395	2078
	14	398	516	544	575	698	638	860	703	1030	772	1208	843	1394	918	1789	1078	2215	1250	2674	1435	3164	1632	3685	1843	4238	2066	5127	2425
	16	455	590	622	658	798	729	983	803	1177	882	1381	964	1593	1049	2044	1232	2532	1428	3056	1640	3616	1865	4212	2106	4844	2361	5860	2771
	18	512	664	700	740	898	820	1106	904	1325	992	1553	1084	1792	1181	2300	1385	2848	1607	3438	1845	4068	2099	4738	2369	5449	2656	6592	3117
	20	569	738	778	822	998	911	1229	1004	1472	1102	1726	1205	1991	1312	2555	1539	3165	1785	3820	2049	4520	2332	5265	2632	6055	2951	7325	3464
36	2	75	74	104	82	135	91	167	100	201	110	236	120	273	131	352	154	437	179	529	205	626	233	730	263	840	295	1017	346
	4	150	148	208	164	270	182	334	201	402	220	473	241	547	262	704	308	874	357	1057	410	1252	466	1460	526	1681	590	2035	693
	6	225	221	313	247	405	273	502	301	603	331	709	361	820	394	1057	462	1312	536	1586	615	1878	700	2190	790	2521	885	3052	1039
	8	300	295	417	329	540	364	669	402	804	441	946	482	1094	525	1409	616	1749	714	2114	820	2505	933	2920	1053	3361	1181	4070	1385
	10	375	369	521	411	674	455	836	502	1005	551	1182	602	1367	656	1761	770	2186	893	2643	1025	3131	1166	3650	1316	4201	1476	5087	1732
	12	450	443	625	493	809	547	1003	603	1206	661	1419	723	1641	787	2113	924	2623	1071	3171	1230	3757	1399	4380	1579	5042	1771	6104	2078
	14	525	516	729	575	944	638	1170	703	1407	772	1655	843	1914	918	2465	1078	3060	1250	3700	1435	4383	1632	5110	1843	5882	2066	7122	2425
	16	601	590	834	658	1079	729	1337	803	1608	882	1892	964	2188	1049	2817	1232	3498	1428	4228	1640	5009	1865	5840	2106	6722	2361	8139	2771
	18	676	664	938	740	1214	820	1505	904	1809	992	2128	1084	2461	1181	3170	1385	3935	1607	4757	1845	5635	2099	6570	2369	7562	2656	9157	3117
	20	751	738	1042	822	1349	911	1672	1004	2010	1102	2364	1205	2734	1312	3522	1539	4372	1785	5285	2049	6261	2332	7300	2632	8403	2951	10174	3464

U = Connector uplift load.
L = Connector lateral load (perpendicular to the wall).

1 Tabulated uplift and lateral connection requirements shall be permitted to be multiplied by 0.75 and 0.92, respectively, for framing not located within 8 feet of building corners.

2 Tabulated connection requirements assume a roof assembly dead load of 9 psf (0.6 x 15 psf = 9 psf).

3 Tabulated uplift loads are specified for headers supporting a roof assembly. When calculating uplift loads for headers supporting floor loads, the tabulated uplift loads shall be permitted to be reduced by 36 plf times the header span for each full wall above.

4 For jack rafter uplift connections, use a roof span equal to twice the jack rafter length. The jack rafter length includes the overhang length and the jack span.

Copyright © American Wood Council. Downloaded/printed pursuant to License Agreement. No reproduction or transfer authorized.
AMERICAN WOOD COUNCIL

Table 3.8 Window Sill Plate Connection Requirements for Wind Exposure B

Wind Speed 3-second gust (mph) (See Figure 1.1)	90	95	100	105	110	115	120	130	140	150	160	170	180	195
Window Sill Span (ft)	**Required Lateral Capacity of Connection at Each End of Window Sill Plate (lbs)[1]**													
2	53	59	66	72	79	87	94	111	129	148	168	190	212	249
4	106	118	131	145	159	173	189	222	257	295	336	379	425	499
6	159	178	197	217	238	260	283	333	386	443	504	569	637	748
8	212	237	262	289	317	347	378	443	514	590	672	758	850	998
10	266	296	328	362	397	434	472	554	643	738	839	948	1062	1247
12	319	355	394	434	476	520	567	665	771	885	1007	1137	1275	1496
14	372	414	459	506	555	607	661	776	900	1033	1175	1327	1487	1746
16	425	474	525	578	635	694	756	887	1028	1181	1343	1516	1700	1995
18	478	533	590	651	714	781	850	998	1157	1328	1511	1706	1912	2244
20	531	592	656	723	794	867	944	1108	1285	1476	1679	1895	2125	2494

1 Tabulated lateral connection requirements shall be permitted to be multiplied by 0.92 for framing not located within 8 feet of building corners.

Copyright © American Wood Council. Downloaded/printed pursuant to License Agreement. No reproduction or transfer authorized.
AMERICAN WOOD COUNCIL

Table 3.8 Window Sill Plate Connection Requirements for Wind Exposure C

Wind Speed 3-second gust (mph) (See Figure 1.1)	90	95	100	105	110	115	120	130	140	150	160	170	180	195
Window Sill Span (ft)	**Required Lateral Capacity of Connection at Each End of Window Sill Plate (lbs)[1]**													
2	74	82	91	100	110	120	131	154	179	205	233	263	295	346
4	148	164	182	201	220	241	262	308	357	410	466	526	590	693
6	221	247	273	301	331	361	394	462	536	615	700	790	885	1039
8	295	329	364	402	441	482	525	616	714	820	933	1053	1181	1385
10	369	411	455	502	551	602	656	770	893	1025	1166	1316	1476	1732
12	443	493	547	603	661	723	787	924	1071	1230	1399	1579	1771	2078
14	516	575	638	703	772	843	918	1078	1250	1435	1632	1843	2066	2425
16	590	658	729	803	882	964	1049	1232	1428	1640	1865	2106	2361	2771
18	664	740	820	904	992	1084	1181	1385	1607	1845	2099	2369	2656	3117
20	738	822	911	1004	1102	1205	1312	1539	1785	2049	2332	2632	2951	3464

1 Tabulated lateral connection requirements shall be permitted to be multiplied by 0.92 for framing not located within 8 feet of building corners.

Copyright © American Wood Council. Downloaded/printed pursuant to License Agreement. No reproduction or transfer authorized.

Table 3.9 Rafter/Ceiling Joist Heel Joint Connection Requirements

(Dead Load Assumptions: Roof Assembly DL = 10 psf)

		Roof Live Load			Ground Snow Load								
		20 psf			30 psf			50 psf			70 psf		
		Roof Span (ft)											
		12	24	36	12	24	36	12	24	36	12	24	36
Rafter Slope	Rafter Spacing (in.)	Required Capacity of Heel Joint Connection (lbs) [1,2,3,4,5]											
3:12	12	360	720	1080	397	794	1192	582	1164	1746	767	1534	2300
	16	480	960	1440	530	1059	1589	776	1552	2328	1022	2045	3067
	19.2	576	1152	1728	636	1271	1907	931	1862	2794	1227	2454	3681
	24	720	1440	2160	794	1589	2383	1164	2328	3492	1534	3067	4601
4:12	12	270	540	810	298	596	894	437	873	1310	575	1150	1725
	16	360	720	1080	397	794	1192	582	1164	1746	767	1534	2300
	19.2	432	864	1296	477	953	1430	698	1397	2095	920	1840	2760
	24	540	1080	1620	596	1192	1787	873	1746	2619	1150	2300	3451
5:12	12	216	432	648	238	477	715	349	698	1048	460	920	1380
	16	288	576	864	318	636	953	466	931	1397	613	1227	1840
	19.2	346	691	1037	381	763	1144	559	1117	1676	736	1472	2208
	24	432	864	1296	477	953	1430	698	1397	2095	920	1840	2760
7:12	12	154	309	463	170	340	511	249	499	748	329	657	986
	16	206	411	617	227	454	681	333	665	998	438	876	1315
	19.2	247	494	741	272	545	817	399	798	1197	526	1052	1577
	24	309	617	926	340	681	1021	499	998	1497	657	1315	1972
9:12	12	120	240	360	132	265	397	194	388	582	256	511	767
	16	160	320	480	177	353	530	259	517	776	341	682	1022
	19.2	192	384	576	212	424	636	310	621	931	409	818	1227
	24	240	480	720	265	530	794	388	776	1164	511	1022	1534
12:12	12	90	180	270	99	199	298	146	291	437	192	383	575
	16	120	240	360	132	265	397	194	388	582	256	511	767
	19.2	144	288	432	159	318	477	233	466	698	307	613	920
	24	180	360	540	199	397	596	291	582	873	383	767	1150

1 Heel joint connections are not required when the ridge is supported by a loadbearing wall, header, or ridge beam designed to resist the applied loads.

2 When intermediate support of the rafter is provided by vertical struts or purlins to a loadbearing wall, the tabulated heel joint connection requirements shall be permitted to be reduced proportionally to the reduction in span.

3 Equivalent connections are required for ceiling joist to ceiling joist lap splices.

4 Tabulated heel joint connection requirements do not include the additional weight of the ceiling assembly.

5 Tabulated heel joint connection requirements assume ceiling joists or rafter ties are located at the bottom of the attic space. When ceiling joists or rafter ties are located higher in the attic space, no attic storage is assumed, and the tabulated heel joint connection requirements shall be increased by the following factors:

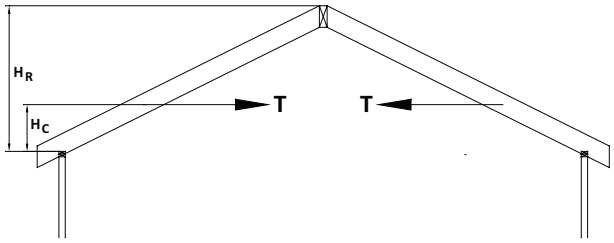

Ceiling Height/ Top Plate-to-Roof Ridge Height (H_C/H_R)	Heel Joint Connection Adjustment Factors
1/2	2.00
1/3	1.50
1/4	1.33
1/5	1.25
1/6	1.20
1/10	1.11

Note: Lateral deflection of the rafter below the rafter ties may exceed 3/4 inch when rafter ties are located above one-third of the top plate-to-roof ridge height, H_R, or when H_C is greater than 2 feet and may require additional consideration.

Copyright © American Wood Council. Downloaded/printed pursuant to License Agreement. No reproduction or transfer authorized.

Table 3.9A Rafter/Ceiling Joist Heel Joint Connection Requirements

(Prescriptive Alternative to Table 3.9)

		Roof Live Load			Ground Snow Load								
		20 psf			30 psf			50 psf			70 psf		
		Roof Span (ft)											
		12	24	36	12	24	36	12	24	36	12	24	36
Rafter Slope	**Rafter Spacing (in.)**	**Required Number of 16d Common or 40d Box Nails per Heel Joint Connection[1,2,3,4,5]**											
3:12	**12**	3	5	8	3	6	9	5	9	13	6	12	17
	16	4	7	10	4	8	12	6	12	17	8	15	23
	19.2	4	8	12	5	10	14	7	14	21	9	18	27
	24	5	10	15	6	12	18	9	17	26	12	23	34
4:12	**12**	3	4	6	3	5	7	4	7	10	5	9	13
	16	3	5	8	3	6	9	5	9	13	6	12	17
	19.2	3	6	9	4	7	11	6	11	16	7	14	21
	24	4	8	11	5	9	13	7	13	19	9	17	26
5:12	**12**	3	3	5	3	4	6	3	6	8	4	7	11
	16	3	4	6	3	5	7	4	7	11	5	9	14
	19.2	3	5	7	3	6	9	5	9	13	6	11	17
	24	3	6	9	4	7	11	6	11	16	7	14	21
7:12	**12**	3	3	4	3	3	4	3	4	6	3	5	8
	16	3	3	5	3	4	5	3	5	8	4	7	10
	19.2	3	4	5	3	4	6	3	6	9	4	8	12
	24	3	5	7	3	5	8	4	8	11	5	10	15
9:12	**12**	3	3	3	3	3	3	3	3	5	3	4	6
	16	3	3	4	3	3	4	3	4	6	3	5	8
	19.2	3	3	4	3	4	5	3	5	7	3	6	9
	24	3	4	5	3	4	6	3	6	9	4	8	12
12:12	**12**	3	3	3	3	3	3	3	3	4	3	3	5
	16	3	3	3	3	3	3	3	3	5	3	4	6
	19.2	3	3	3	3	3	4	3	4	6	3	5	7
	24	3	3	4	3	3	5	3	5	7	3	6	9

1 Heel joint connections are not required when the ridge is supported by a loadbearing wall, header or ridge beam designed to resist the applied loads.

2 When intermediate support of the rafter is provided by vertical struts or purlins to a loadbearing wall, the tabulated heel joint connection requirements shall be permitted to be reduced proportionally to the reduction in span.

3 Equivalent connections are required for ceiling joist to ceiling joist lap splices.

4 Tabulated heel joint connection requirements do not include the additional weight of the ceiling assembly.

5 Tabulated heel joint connection requirements assume ceiling joists or rafter ties are located at the bottom of the attic space. When ceiling joists or rafter ties are located higher in the attic space, no attic storage is assumed, and the tabulated heel joint connection requirements shall be increased by the following factors:

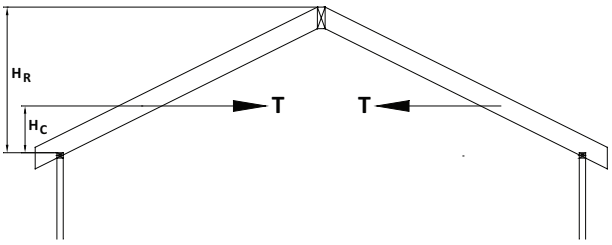

Ceiling Height/ Top Plate-to-Roof Ridge Height (H_C/H_R)	Heel Joint Connection Adjustment Factors
1/2	2.00
1/3	1.50
1/4	1.33
1/5	1.25
1/6	1.20
1/10	1.11

Note: Lateral deflection of the rafter below the rafter ties may exceed 3/4 inch when rafter ties are located above one-third of the top plate-to-roof ridge height, H_R, or when H_C is greater than 2 feet and may require additional consideration.

Copyright © American Wood Council. Downloaded/printed pursuant to License Agreement. No reproduction or transfer authorized.

Table 3.10 Roof Sheathing Attachment Requirements for Wind Loads — Exposure B

Wind Speed 3-second gust (mph) (See Figure 1.1)				90	95	100	105	110	115	120	130	140	150	160	170	180	195
Sheathing Location[1]	Rafter /Truss Spacing (in.)	Fastener Spacing: Panel Edges (in.)	Fastener Spacing: Interm. Supports (in.)	Uplift Load per Nail (lbs)													
Interior Zone	12	6	12	17	19	21	23	25	28	30	35	41	47	53	60	67	78
		6	6	9	10	11	12	13	14	15	18	21	24	27	30	34	39
		4	4	6	7	7	8	9	9	10	12	14	16	18	20	23	26
		3	3	5	5	6	6	7	7	8	9	10	12	14	15	17	20
	16	6	12	23	25	28	31	34	37	40	47	54	62	70	79	89	104
		6	6	12	13	14	16	17	19	20	24	27	31	35	40	45	52
		4	4	8	9	10	10	11	12	14	16	18	21	24	27	30	35
		3	3	6	7	7	8	9	9	10	12	14	16	18	20	23	26
	19.2	6	12	27	30	33	37	40	44	48	56	65	74	84	95	107	125
		6	6	14	15	17	19	20	22	24	28	33	37	42	48	54	63
		4	4	9	10	11	12	14	15	16	19	22	25	28	32	36	42
		3	3	7	8	9	9	10	11	12	14	17	19	21	24	27	32
	24	6	12	34	37	41	46	50	55	59	70	81	93	105	119	133	156
		6	6	17	19	21	23	25	28	30	35	41	47	53	60	67	78
		4	4	12	13	14	16	17	19	20	24	27	31	35	40	45	52
		3	3	9	10	11	12	13	14	15	18	21	24	27	30	34	39
Perimeter Edge Zone	12	6	12	32	35	39	43	47	51	56	66	76	87	99	112	125	147
		6	6	16	18	20	22	24	26	28	33	38	44	50	56	63	74
		4	4	11	12	13	15	16	17	19	22	26	29	33	38	42	49
		3	3	8	9	10	11	12	13	14	17	19	22	25	28	32	37
	16	6	12	42	47	52	57	63	68	74	87	101	116	132	149	167	196
		6	6	21	24	26	29	32	34	37	44	51	58	66	75	84	98
		4	4	14	16	18	19	21	23	25	29	34	39	44	50	56	66
		3	3	11	12	13	15	16	17	19	22	26	29	33	38	42	49
	19.2	6	12	50	56	62	68	75	82	89	105	121	139	158	179	200	235
		6	6	25	28	31	34	38	41	45	53	61	70	79	90	100	118
		4	4	17	19	21	23	25	28	30	35	41	47	53	60	67	79
		3	3	13	14	16	17	19	21	23	27	31	35	40	45	50	59
	24	6	12	63	70	78	85	94	102	111	131	152	174	198	223	250	294
		6	6	32	35	39	43	47	51	56	66	76	87	99	112	125	147
		4	4	21	24	26	29	32	34	37	44	51	58	66	75	84	98
		3	3	16	18	20	22	24	26	28	33	38	44	50	56	63	74
Gable Endwall Rake or Rake Truss with up to 9" Rake Overhang	Fastener Spacing (in.)			Uplift Load per Nail (lbs)													
	6			28	31	35	38	42	46	50	59	68	78	88	100	112	131
	4			19	21	23	26	28	31	33	39	45	52	59	67	75	88
	3			14	16	18	19	21	23	25	30	34	39	44	50	56	66

	Fastener Uplift Capacity[2, 3] (lbs)									
Sheathing Thickness (in.)	3/8		7/16		15/32		19/32		23/32	
Framing Member SG	0.42	0.49	0.42	0.49	0.42	0.49	0.42	0.49	0.42	0.49
8d common[4]	70	91	68	100	67	98	63	92	58	86
10d box[4]	84	101	82	118	81	120	77	114	73	108
RSRS-03[5]	91	91	99	106	99	114	99	135	99	135

1 For roof sheathing within 4 feet of the perimeter edge of the roof, including 4 feet on each side of the roof peak, the 4-foot perimeter edge zone attachment requirements shall be used.

2 Minimum capacity of withdrawal and fastener head pull-through is tabulated.

3 Tabulated values include a load duration factor adjustment, C_D=1.6.

4 Tabulated values for 8d common nails and 10d box nails are applicable to carbon steel nails (bright or galvanized).

5 Tabulated values for RSRS-03 nails are applicable to carbon steel (bright or galvanized) or stainless steel nails.

Copyright © American Wood Council. Downloaded/printed pursuant to License Agreement. No reproduction or transfer authorized.
AMERICAN WOOD COUNCIL

Table 3.10 Roof Sheathing Attachment Requirements for Wind Loads — Exposure C

Wind Speed 3-second gust (mph) (See Figure 1.1)				90	95	100	105	110	115	120	130	140	150	160	170	180	195
Sheathing Location[1]	Rafter /Truss Spacing (in.)	Fastener Spacing: Panel Edges (in.)	Fastener Spacing: Interm. Supports (in.)	Uplift Load per Nail (lbs)													
Interior Zone	12	6	12	24	26	29	32	35	38	41	49	56	64	73	83	93	109
		6	6	12	13	15	16	18	19	21	25	28	32	37	42	47	55
		4	4	8	9	10	11	12	13	14	16	19	22	25	28	31	37
		3	3	6	7	8	8	9	10	11	12	14	16	19	21	24	28
	16	6	12	31	35	38	42	46	51	55	65	75	86	98	110	123	145
		6	6	16	18	19	21	23	26	28	33	38	43	49	55	62	73
		4	4	11	12	13	14	16	17	19	22	25	29	33	37	41	49
		3	3	8	9	10	11	12	13	14	16	19	22	25	28	31	37
	19.2	6	12	37	42	46	51	56	61	66	77	90	103	117	132	148	174
		6	6	19	21	23	26	28	31	33	39	45	52	59	66	74	87
		4	4	13	14	16	17	19	21	22	26	30	35	39	44	50	58
		3	3	10	11	12	13	14	16	17	20	23	26	30	33	37	44
	24	6	12	47	52	57	63	69	76	82	97	112	129	146	165	185	217
		6	6	24	26	29	32	35	38	41	49	56	64	73	83	93	109
		4	4	16	18	19	21	23	26	28	33	38	43	49	55	62	73
		3	3	12	13	15	16	18	19	21	25	28	32	37	42	47	55
Perimeter Edge Zone	12	6	12	44	49	54	59	65	71	78	91	105	121	137	155	174	204
		6	6	22	25	27	30	33	36	39	46	53	61	69	78	87	102
		4	4	15	17	18	20	22	24	26	31	35	41	46	52	58	68
		3	3	11	13	14	15	17	18	20	23	27	31	35	39	44	51
	16	6	12	58	65	72	79	87	95	103	121	140	161	183	207	232	272
		6	6	29	33	36	40	44	48	52	61	70	81	92	104	116	136
		4	4	20	22	24	27	29	32	35	41	47	54	61	69	78	91
		3	3	15	17	18	20	22	24	26	31	35	41	46	52	58	68
	19.2	6	12	70	78	86	95	104	114	124	145	168	193	220	248	278	326
		6	6	35	39	43	48	52	57	62	73	84	97	110	124	139	163
		4	4	24	26	29	32	35	38	42	49	56	65	74	83	93	109
		3	3	18	20	22	24	26	29	31	37	42	49	55	62	70	82
	24	6	12	87	97	108	118	130	142	155	181	210	241	275	310	347	408
		6	6	44	49	54	59	65	71	78	91	105	121	137	155	174	204
		4	4	29	33	36	40	44	48	52	61	70	81	92	104	116	136
		3	3	22	25	27	30	33	36	39	46	53	61	69	78	87	102
Gable Endwall Rake or Rake Truss with up to 9" Rake Overhang	Fastener Spacing (in.)			Uplift Load per Nail (lbs)													
	6			39	44	48	53	58	64	69	81	94	108	123	138	155	182
	4			26	29	32	36	39	43	46	54	63	72	82	92	104	121
	3			20	22	24	27	29	32	35	41	47	54	62	69	78	91

	Fastener Uplift Capacity[2, 3] (lbs)									
Sheathing Thickness (in.)	3/8		7/16		15/32		19/32		23/32	
Framing Member SG	0.42	0.49	0.42	0.49	0.42	0.49	0.42	0.49	0.42	0.49
8d common[4]	70	91	68	100	67	98	63	92	58	86
10d box[4]	84	101	82	118	81	120	77	114	73	108
RSRS-03[5]	91	91	99	106	99	114	99	135	99	135

1 For roof sheathing within 4 feet of the perimeter edge of the roof, including 4 feet on each side of the roof peak, the 4-foot perimeter edge zone attachment requirements shall be used.

2 Minimum capacity of withdrawal and fastener head pull-through is tabulated.

3 Tabulated values include a load duration factor adjustment, C_D=1.6.

4 Tabulated values for 8d common nails and 10d box nails are applicable to carbon steel nails (bright or galvanized).

5 Tabulated values for RSRS-03 nails are applicable to carbon steel (bright or galvanized) or stainless steel nails.

Copyright © American Wood Council. Downloaded/printed pursuant to License Agreement. No reproduction or transfer authorized.

Table 3.10A Roof Sheathing Attachment Requirements for Wind Loads (7/16", PANEL SG=0.50)

Exposure B

(Prescriptive Alternative to Table 3.10)

Wind Speed 3-second gust (mph) (See Figure 1.1)			90		95		100		105		110		115		120		130		140		150		160		170		180		195	
STRUCTURAL SHEATHING																														
			E	F	E	F	E	F	E	F	E	F	E	F	E	F	E	F	E	F	E	F	E	F	E	F	E	F	E	F
Sheathing Location[1]	Rafter/Truss Framing Specific Gravity, G	Rafter/Truss Spacing (in.)	Maximum Nail Spacing for 8d Common Nails, or 10d Box Nails (inches, o.c.) [2,4]																											
Interior Zone	0.49	12	6	12	6	12	6	12	6	12	6	12	6	12	6	12	6	12	6	12	6	12	6	12	6	12	6	12	6	12
		16	6	12	6	12	6	12	6	12	6	12	6	12	6	12	6	12	6	12	6	12	6	12	6	12	6	12	6	6
		19.2	6	12	6	12	6	12	6	12	6	12	6	12	6	12	6	12	6	12	6	12	6	12	6	12	6	6	6	6
		24	6	12	6	12	6	12	6	12	6	12	6	12	6	12	6	12	6	12	6	12	6	6	6	6	6	6	6	6
	0.42	12	6	12	6	12	6	12	6	12	6	12	6	12	6	12	6	12	6	12	6	12	6	12	6	12	6	12	6	6
		16	6	12	6	12	6	12	6	12	6	12	6	12	6	12	6	12	6	12	6	12	6	6	6	6	6	6	6	6
		19.2	6	12	6	12	6	12	6	12	6	12	6	12	6	12	6	12	6	12	6	6	6	6	6	6	6	6	6	6
		24	6	12	6	12	6	12	6	12	6	12	6	12	6	12	6	6	6	6	6	6	6	6	6	6	6	6	4	4
Perimeter Edge Zone	0.49	12	6	12	6	12	6	12	6	12	6	12	6	12	6	12	6	12	6	12	6	12	6	12	6	6	6	6	6	6
		16	6	12	6	12	6	12	6	12	6	12	6	12	6	12	6	12	6	6	6	6	6	6	6	6	6	6	6	6
		19.2	6	12	6	12	6	12	6	12	6	12	6	12	6	12	6	6	6	6	6	6	6	6	6	6	6	6		
		24	6	12	6	12	6	12	6	12	6	12	6	6	6	6	6	6	6	6	Exceeds capacity of 7/16" sheathing[3]									
	0.42	12	6	12	6	12	6	12	6	12	6	12	6	12	6	12	6	12	6	6	6	6	6	6	6	6	6	6	4	4
		16	6	12	6	12	6	12	6	12	6	12	6	12	6	6	6	6	6	6	6	6	6	6	4	4	4	4	4	4
		19.2	6	12	6	12	6	12	6	12	6	12	6	6	6	6	6	6	6	6	4	4	4	4	4	4	4	4		
		24	6	12	6	6	6	6	6	6	6	6	6	6	6	6	6	6	4	4	Exceeds capacity of 7/16" sheathing[3]									
Gable Endwall Rake or Rake Truss with up to 9" Rake Overhang	0.49	-	6		6		6		6		6		6		6		6		6		6		6		6		4		4	
	0.42	-	6		6		6		6		6		6		6		6		6		4		4		4		3		3	

BOARD SHEATHING																
Sheathing Size	Rafter/Truss Spacing (in.)	Minimum Number of 8d Common Nails Per Support[4]														
1x6 or 1x8 Sheathing	12-19.2	2	2	2	2	2	2	2	2	2	2	2	2	2	2	
1x10 or Larger Sheathing	12-19.2	3	3	3	3	3	3	3	3	3	3	3	3	3	3	

E - Nail spacing at panel edges (in.)

F - Nail spacing at intermediate supports in the panel field (in.)

1 For roof sheathing within 4 feet of the perimeter edge of the roof, including 4 feet on each side of the roof peak, the 4 foot perimeter edge zone attachment requirements shall be used.

2 For wind speeds greater than 130 mph, blocking is required which transfers lateral load to two additional joists (3 joists total).

3 See Table 3.10 for other fastener and sheathing combinations.

4 Tabulated values for 8d common and 10d box nails are applicable to carbon steel nails (bright or galvanized).

Copyright © American Wood Council. Downloaded/printed pursuant to License Agreement. No reproduction or transfer authorized.

Table 3.10A Roof Sheathing Attachment Requirements for Wind Loads (7/16", PANEL SG=0.50)

Exposure C

(Prescriptive Alternative to Table 3.10)

Wind Speed 3-second gust (mph) (See Figure 1.1)			90		95		100		105		110		115		120		130		140		150		160		170		180		195	
STRUCTURAL SHEATHING																														
			E	F	E	F	E	F	E	F	E	F	E	F	E	F	E	F	E	F	E	F	E	F	E	F	E	F	E	F
Sheathing Location[1]	Rafter/Truss Framing Specific Gravity, G	Rafter/Truss Spacing (in.)	Maximum Nail Spacing for 8d Common Nails, or 10d Box Nails (inches, o.c.) [2, 4]																											
Interior Zone	0.49	12	6	12	6	12	6	12	6	12	6	12	6	12	6	12	6	12	6	12	6	12	6	12	6	12	6	12	6	6
		16	6	12	6	12	6	12	6	12	6	12	6	12	6	12	6	12	6	12	6	12	6	12	6	6	6	6	6	6
		19.2	6	12	6	12	6	12	6	12	6	12	6	12	6	12	6	12	6	12	6	6	6	6	6	6	6	6	6	6
		24	6	12	6	12	6	12	6	12	6	12	6	12	6	12	6	12	6	6	6	6	6	6	6	6	Exceeds 7/16" [3]			
	0.42	12	6	12	6	12	6	12	6	12	6	12	6	12	6	12	6	12	6	12	6	12	6	6	6	6	6	6	6	6
		16	6	12	6	12	6	12	6	12	6	12	6	12	6	12	6	12	6	6	6	6	6	6	6	6	6	6	4	4
		19.2	6	12	6	12	6	12	6	12	6	12	6	12	6	12	6	6	6	6	6	6	6	6	6	6	4	4	4	4
		24	6	12	6	12	6	12	6	12	6	12	6	6	6	6	6	6	6	6	6	6	4	4	4	4	Exceeds 7/16" [3]			
Perimeter Edge Zone	0.49	12	6	12	6	12	6	12	6	12	6	12	6	12	6	12	6	12	6	6	6	6	6	6	6	6	6	6	4	4
		16	6	12	6	12	6	12	6	12	6	12	6	12	6	6	6	6	6	6	6	6	6	6	4	4	4	4		
		19.2	6	12	6	12	6	12	6	12	6	12	6	6	6	6	6	6	6	6	6	6	Exceeds capacity of 7/16" sheathing[3]							
		24	6	12	6	12	6	6	6	6	6	12	6	6	6	6														
	0.42	12	6	12	6	12	6	12	6	12	6	12	6	6	6	6	6	6	6	6	6	6	4	4	4	4	4	4	4	4
		16	6	12	6	12	6	6	6	6	6	12	6	6	6	6	6	6	4	4	4	4	4	4	3	3	3	3		
		19.2	6	6	6	6	6	6	6	6	6	6	6	6	6	6	4	4	4	4	4	4	Exceeds capacity of 7/16" sheathing[3]							
		24	6	6	6	6	6	6	6	6	6	6	4	4	4	4														
Gable Endwall Rake or Rake Truss with up to 9" Rake Overhang	0.49	-	6		6		6		6		6		6		6		6		6		4		4		4		3		3	
	0.42	-	6		6		6		6		6		6		4		4		4		3		3		3		-		-	

BOARD SHEATHING																
Sheathing Size	Rafter/Truss Spacing (in.)	Minimum Number of 8d Common Nails Per Support[4]														
1x6 or 1x8 Sheathing	12-19.2	2	2	2	2	2	2	2	2	2	2	2	2	2	2
1x10 or Larger Sheathing	12-19.2	3	3	3	3	3	3	3	3	3	3	3	3	3	3

E - Nail spacing at panel edges (in.)

F - Nail spacing at intermediate supports in the panel field (in.)

1 For roof sheathing within 4 feet of the perimeter edge of the roof, including 4 feet on each side of the roof peak, the 4 foot perimeter edge zone attachment requirements shall be used.

2 For wind speeds greater than 130 mph, blocking is required which transfers lateral load to two additional joists (3 joists total).

3 See Table 3.10 for other fastener and sheathing combinations.

4 Tabulated values for 8d common and 10d box nails are applicable to carbon steel nails (bright or galvanized).

Copyright © American Wood Council. Downloaded/printed pursuant to License Agreement. No reproduction or transfer authorized.

Table 3.11 Wall Sheathing and Cladding Attachment Requirements for Wind Loads

Exposure B

	Wind Speed 3-second gust (mph) (See Figure 1.1)	90		95		100		105		110		115		120		130		140		150		160		170		180		195	
STRUCTURAL SHEATHING																													
		E	F	E	F	E	F	E	F	E	F	E	F	E	F	E	F	E	F	E	F	E	F	E	F	E	F	E	F
Sheathing Location[1]	Stud Spacing (inches, o.c.)	Maximum Nail Spacing for 8d Common Nails or 10d Box Nails (inches, o.c.)[2, 3]																											
Interior Zone	12	6	12	6	12	6	12	6	12	6	12	6	12	6	12	6	12	6	12	6	12	6	12	6	12	6	12	6	12
	16	6	12	6	12	6	12	6	12	6	12	6	12	6	12	6	12	6	12	6	12	6	12	6	12	6	12	6	12
	24	6	12	6	12	6	12	6	12	6	12	6	12	6	12	6	12	6	12	6	12	6	12	6	6	6	6	6	6
Perimeter Edge Zone	12	6	12	6	12	6	12	6	12	6	12	6	12	6	12	6	12	6	12	6	12	6	12	6	12	6	12	6	12
	16	6	12	6	12	6	12	6	12	6	12	6	12	6	12	6	12	6	12	6	12	6	12	6	12	6	12	6	6
	24	6	12	6	12	6	12	6	12	6	12	6	12	6	12	6	12	6	12	6	12	6	6	6	6	6	6	6	6
BOARD SHEATHING or LAP SIDING																													
Sheathing Size	Rafter/Truss Spacing (inches, o.c.)	Minimum Number of 8d Common Nails or 10d Box Nails Per Support																											
1x6 or 1x8 Sheathing	12-24	2		2		2		2		2		2		2		2		2		2		2		2		2		2	
1x10 or Larger Sheathing	12-24	3		3		3		3		3		3		3		3		3		3		3		3		3		3	

E - Nail spacing at panel edges (in.)
F - Nail spacing at intermediate supports in the panel field (in.)

1 For wall sheathing within 4 feet of the corners, the 4 foot edge zone attachment requirements shall be used.

2 Tabulated nail spacing assumes sheathing attached to stud framing members with $0.42 \leq G < 0.49$.

3 For exterior panel siding, galvanized box nails shall be permitted to be substituted for common nails.

Copyright © American Wood Council. Downloaded/printed pursuant to License Agreement. No reproduction or transfer authorized.
AMERICAN WOOD COUNCIL

Table 3.11 Wall Sheathing and Cladding Attachment Requirements for Wind Loads

Exposure C

	Wind Speed 3-second gust (mph) (See Figure 1.1)	90		95		100		105		110		115		120		130		140		150		160		170		180		195	
		STRUCTURAL SHEATHING																											
		E	F	E	F	E	F	E	F	E	F	E	F	E	F	E	F	E	F	E	F	E	F	E	F	E	F	E	F
Sheathing Location[1]	Stud Spacing (inches, o.c.)	Maximum Nail Spacing for 8d Common Nails or 10d Box Nails (inches, o.c.)[2, 3]																											
Interior Zone	12	6	12	6	12	6	12	6	12	6	12	6	12	6	12	6	12	6	12	6	12	6	12	6	12	6	12	6	12
	16	6	12	6	12	6	12	6	12	6	12	6	12	6	12	6	12	6	12	6	12	6	12	6	12	6	6	6	6
	24	6	12	6	12	6	12	6	12	6	12	6	12	6	12	6	12	6	12	6	6	6	6	6	6	6	6	6	6
Perimeter Edge Zone	12	6	12	6	12	6	12	6	12	6	12	6	12	6	12	6	12	6	12	6	12	6	12	6	12	6	12	6	6
	16	6	12	6	12	6	12	6	12	6	12	6	12	6	12	6	12	6	12	6	12	6	6	6	6	6	6	6	6
	24	6	12	6	12	6	12	6	12	6	12	6	12	6	12	6	6	6	6	6	6	6	6	6	6	6	6	4	4
		BOARD SHEATHING or LAP SIDING																											
Sheathing Size	Rafter/Truss Spacing (inches, o.c.)	Minimum Number of 8d Common Nails or 10d Box Nails Per Support																											
1x6 or 1x8 Sheathing	12-24	2		2		2		2		2		2		2		2		2		2		2		2		2		2	
1x10 or Larger Sheathing	12-24	3		3		3		3		3		3		3		3		3		3		3		3		3		3	

E - Nail spacing at panel edges (in.)

F - Nail spacing at intermediate supports in the panel field (in.)

1 For wall sheathing within 4 feet of the corners, the 4 foot edge zone attachment requirements shall be used.

2 Tabulated nail spacing assumes sheathing attached to stud framing members with $0.42 \leq G < 0.49$.

3 For exterior panel siding, galvanized box nails shall be permitted to be substituted for common nails.

Copyright © American Wood Council. Downloaded/printed pursuant to License Agreement. No reproduction or transfer authorized.

Table 3.12A Roof Sheathing Requirements for Wind Loads — Exposure B

Wind Speed 3-second gust (mph) (See Figure 1.1)	90	95	100	105	110	115	120	130	140	150	160	170	180	195
WOOD STRUCTURAL PANELS (Strength Axis[2] Applied Perpendicular to Supports)[1]														
Rafter/Truss Spacing (inches, o.c.)	**Minimum Panel Span Rating[3] (Minimum Nominal Panel Thickness, in.)**													
12	24/0 (3/8)	24/0 (3/8)	24/0 (3/8)	24/0 (3/8)	24/0 (3/8)	24/0 (3/8)	24/0 (3/8)	24/0 (3/8)	24/0 (3/8)	24/0 (3/8)	24/0 (3/8)	24/0 (3/8)	24/0 (3/8)	24/0 (3/8)
16	24/0 (3/8)	24/0 (3/8)	24/0 (3/8)	24/0 (3/8)	24/0 (3/8)	24/0 (3/8)	24/0 (3/8)	24/0 (3/8)	24/0 (3/8)	24/0 (3/8)	24/0 (3/8)	24/0 (3/8)	24/0 (3/8)	24/0 (3/8)
19.2	24/0 (3/8)	24/0 (3/8)	24/0 (3/8)	24/0 (3/8)	24/0 (3/8)	24/0 (3/8)	24/0 (3/8)	24/0 (3/8)	24/0 (3/8)	24/0 (3/8)	24/0 (3/8)	24/16 (7/16)	24/16 (7/16)	32/16 (15/32)
24	24/0 (3/8)	24/0 (3/8)	24/0 (3/8)	24/0 (3/8)	24/0 (3/8)	24/0 (3/8)	24/0 (3/8)	24/0 (3/8)	24/16 (7/16)	32/16 (15/32)	40/20 (19/32)	40/20 (19/32)	40/20 (19/32)	40/20 (19/32)
BOARD SHEATHING (diagonally across 3 or more supports)														
Rafter/Truss Spacing (inches, o.c.)	**Minimum Board Thickness (in.)**													
12	5/8	5/8	5/8	5/8	5/8	5/8	5/8	5/8	5/8	5/8	5/8	5/8	5/8	5/8
16	5/8	5/8	5/8	5/8	5/8	5/8	5/8	5/8	5/8	3/4	3/4	3/4	3/4	3/4
19.2	5/8	5/8	5/8	5/8	5/8	5/8	5/8	3/4	3/4	3/4	-	-	-	-
24	3/4	3/4	3/4	3/4	3/4	3/4	3/4	-	-	-	-	-	-	-

1 Tabulated values assume a two-span continuous condition.

2 Strength axis is defined as the axis parallel to the face and back orientation of the flakes or the grain (veneer), which is generally the long panel direction, unless otherwise marked.

3 Minimim PS 1 or PS 2 panel span rating. Minimum nominal panel thickness for a given span rating is shown in parentheses.

Copyright © American Wood Council. Downloaded/printed pursuant to License Agreement. No reproduction or transfer authorized.

Table 3.12A Roof Sheathing Requirements for Wind Loads — Exposure C

Wind Speed 3-second gust (mph) (See Figure 1.1)	90	95	100	105	110	115	120	130	140	150	160	170	180	195
WOOD STRUCTURAL PANELS (Strength Axis[2] Applied Perpendicular to Supports)[1]														
Rafter/Truss Spacing (inches, o.c.)	**Minimum Panel Span Rating[3] (Minimum Nominal Panel Thickness, in.)**													
12	24/0 (3/8)	24/0 (3/8)	24/0 (3/8)	24/0 (3/8)	24/0 (3/8)	24/0 (3/8)	24/0 (3/8)	24/0 (3/8)	24/0 (3/8)	24/0 (3/8)	24/0 (3/8)	24/0 (3/8)	24/0 (3/8)	24/0 (3/8)
16	24/0 (3/8)	24/0 (3/8)	24/0 (3/8)	24/0 (3/8)	24/0 (3/8)	24/0 (3/8)	24/0 (3/8)	24/0 (3/8)	24/0 (3/8)	24/0 (3/8)	24/0 (3/8)	24/16 (7/16)	24/16 (7/16)	32/16 (15/32)
19.2	24/0 (3/8)	24/0 (3/8)	24/0 (3/8)	24/0 (3/8)	24/0 (3/8)	24/0 (3/8)	24/0 (3/8)	24/0 (3/8)	24/16 (7/16)	24/16 (7/16)	32/16 (15/32)	40/20 (19/32)	40/20 (19/32)	40/20 (19/32)
24	24/0 (3/8)	24/0 (3/8)	24/0 (3/8)	24/0 (3/8)	24/0 (3/8)	24/16 (7/16)	24/16 (7/16)	32/16 (15/32)	40/20 (19/32)	40/20 (19/32)	40/20 (19/32)	40/20 (19/32)	48/24 (23/32)	48/24 (23/32)
BOARD SHEATHING (diagonally across 3 or more supports)														
Rafter/Truss Spacing (inches, o.c.)	**Minimum Board Thickness (in.)**													
12	5/8	5/8	5/8	5/8	5/8	5/8	5/8	5/8	5/8	5/8	5/8	5/8	5/8	3/4
16	5/8	5/8	5/8	5/8	5/8	5/8	5/8	3/4	3/4	3/4	3/4	-	-	-
19.2	5/8	5/8	5/8	3/4	3/4	3/4	3/4	3/4	-	-	-	-	-	-
24	3/4	3/4	3/4	-	-	-	-	-	-	-	-	-	-	-

1 Tabulated values assume a two-span continuous condition.

2 Strength axis is defined as the axis parallel to the face and back orientation of the flakes or the grain (veneer), which is generally the long panel direction, unless otherwise marked.

3 Minimim PS 1 or PS 2 panel span rating. Minimum nominal panel thickness for a given span rating is shown in parentheses.

Copyright © American Wood Council. Downloaded/printed pursuant to License Agreement. No reproduction or transfer authorized.
AMERICAN WOOD COUNCIL

Table 3.12B Maximum Roof Sheathing Spans for Roof Live and Snow Loads

(Dead Load Assumptions: Roof Assembly DL = 10 psf)

			Roof Live Load	Ground Snow Load		
			20 psf	30 psf	50 psf	70 psf
Sheathing Type	**Span Rating or Grade**	**Minimum Thickness (in.)**	**Rafter/Truss Spacing (in.)**			
Wood Structural Panels (Sheathing Grades, C-C, C-D, OSB)[1]	**24/0**	**3/8**	24	24	19.2	19.2
	24/16	**7/16**	24	24	24	19.2
	32/16	**15/32**	24	24	24	24
	40/20	**19/32**	24	24	24	24
	48/24	**23/32**	24	24	24	24
Wood Structural Panels (Single Floor Grades, Underlayment, C-C Plugged)[1]	**16 o.c.**	**19/32**	24	24	24	24
	20 o.c.	**19/32**	24	24	24	24
	24 o.c.	**23/32**	24	24	24	24
	32 o.c.	**7/8**	24	24	24	24
Lumber Board Sheathing	**#4 Common or Utility**	**5/8**	19.2	16	12	12
	#4 Common or Utility	**3/4**	24	19.2	19.2	16

[1] Tabulated values assume a two-span continuous condition.

Copyright © American Wood Council. Downloaded/printed pursuant to License Agreement. No reproduction or transfer authorized.
AMERICAN WOOD COUNCIL

Table 3.13A Wall Sheathing Requirements for Wind Loads — Exposure B

Wind Speed 3-second gust (mph)	90	95	100	105	110	115	120	130	140	150	160	170	180	195
WOOD STRUCTURAL PANEL[3] (Strength Axis[1] Perpendicular to Supports)														
Stud Spacing (inches, o.c.)	**Minimum Panel Span Rating[4] (Minimum Nominal Panel Thickness, in.)**													
12-24	24/0 (3/8)	24/0 (3/8)	24/0 (3/8)	24/0 (3/8)	24/0 (3/8)	24/0 (3/8)	24/0 (3/8)	24/0 (3/8)	24/0 (3/8)	24/0 (3/8)	24/0 (3/8)	24/0 (3/8)	24/0 (3/8)	24/0 (3/8)
WOOD STRUCTURAL PANEL[3] (Strength Axis[1] Parallel to Supports)														
Stud Spacing (inches, o.c.)	**Minimum Panel Span Rating[4,5] (Minimum Nominal Panel Thickness, in.)**													
12	24/0 (3/8)	24/0 (3/8)	24/0 (3/8)	24/0 (3/8)	24/0 (3/8)	24/0 (3/8)	24/0 (3/8)	24/0 (3/8)	24/0 (3/8)	24/0 (3/8)	24/0 (3/8)	24/0 (3/8)	24/0 (3/8)	24/16 (7/16)
16	24/0 (3/8)	24/0 (3/8)	24/0 (3/8)	24/0 (3/8)	24/0 (3/8)	24/0 (3/8)	24/0 (3/8)	24/0 (3/8)	24/0 (3/8)	24/16 (7/16)	32/16 (15/32)	32/16 (15/32)	32/16 (15/32)	40/20 (19/32)
24[2]	24/0 (3/8)	24/0 (3/8)	24/0 (3/8)	24/0 (3/8)	24/0 (3/8)	24/16 (7/16)	24/16 (7/16)	32/16 (15/32)	40/20 (19/32)	40/20 (19/32)	40/20 (19/32)	40/20 (19/32)	48/24 (23/32)	48/24 (23/32)
CELLULOSIC FIBERBOARD SHEATHING (short dimension across studs)														
Stud Spacing (inches, o.c.)	**Minimum Panel Thickness (in.)**													
12	1/2	1/2	1/2	1/2	1/2	1/2	1/2	1/2	1/2	1/2	1/2	1/2	1/2	1/2
16	1/2	1/2	1/2	1/2	1/2	1/2	1/2	1/2	1/2	1/2	1/2	1/2	25/32	-
BOARD SHEATHING (diagonally across 3 or more supports)														
Stud Spacing (inches, o.c.)	**Minimum Board Thickness (in.)**													
12	5/8	5/8	5/8	5/8	5/8	5/8	5/8	5/8	5/8	5/8	5/8	5/8	5/8	5/8
16	5/8	5/8	5/8	5/8	5/8	5/8	5/8	5/8	5/8	5/8	5/8	5/8	5/8	5/8
24	5/8	5/8	5/8	5/8	5/8	5/8	5/8	5/8	5/8	5/8	5/8	3/4	3/4	-

1 Strength axis is defined as the axis parallel to the face and back orientation of the flakes or the grain (veneer), which is generally the long panel direction, unless otherwise marked.

2 Sheathing shall be plywood with 4 or more plies or OSB.

3 Tabulated values assume a two-span continuous condition.

4 Minimim PS 1 or PS 2 panel span rating. Minimum nominal panel thickness for a given span rating is shown in parentheses.

5 Minimim panel span rating is based on calculation without use of increased values of cross-panel strength associated with Structural I sheathing. For Structural I sheathing, a smaller required span rating and smaller nominal panel thickness may be determined by calculations that account for increased cross-panel strength.

Copyright © American Wood Council. Downloaded/printed pursuant to License Agreement. No reproduction or transfer authorized.

Table 3.13A Wall Sheathing Requirements for Wind Loads — Exposure C

Wind Speed 3-second gust (mph) (See Figure 1.1)	90	95	100	105	110	115	120	130	140	150	160	170	180	195
WOOD STRUCTURAL PANEL[3] (Strength Axis[1] Perpendicular to Supports)														
Stud Spacing (inches, o.c.)	**Minimum Panel Span Rating[4] (Minimum Nominal Panel Thickness, in.)**													
12-24	24/0 (3/8)	24/0 (3/8)	24/0 (3/8)	24/0 (3/8)	24/0 (3/8)	24/0 (3/8)	24/0 (3/8)	24/0 (3/8)	24/0 (3/8)	24/0 (3/8)	24/0 (3/8)	24/0 (3/8)	24/16 (7/16)	24/16 (7/16)
WOOD STRUCTURAL PANEL[3] (Strength Axis[1] Parallel to Supports)														
Stud Spacing (inches, o.c.)	**Minimum Panel Span Rating[4,5] (Minimum Nominal Panel Thickness, in.)**													
12	24/0 (3/8)	24/0 (3/8)	24/0 (3/8)	24/0 (3/8)	24/0 (3/8)	24/0 (3/8)	24/0 (3/8)	24/0 (3/8)	24/0 (3/8)	24/0 (3/8)	24/0 (3/8)	24/16 (7/16)	24/16 (7/16)	32/16 (15/32)
16	24/0 (3/8)	24/0 (3/8)	24/0 (3/8)	24/0 (3/8)	24/0 (3/8)	24/0 (3/8)	24/0 (3/8)	24/16 (7/16)	32/16 (15/32)	32/16 (15/32)	32/16 (15/32)	40/20 (19/32)	40/20 (19/32)	40/20 (19/32)
24[2]	24/0 (3/8)	24/0 (3/8)	24/16 (7/16)	32/16 (15/32)	32/16 (15/32)	32/16 (15/32)	40/20 (19/32)	40/20 (19/32)	40/20 (19/32)	40/20 (19/32)	48/24 (23/32)	48/24 (23/32)	48/24 (23/32)	-
CELLULOSIC FIBERBOARD SHEATHING (short dimension across studs)														
Stud Spacing (inches, o.c.)	**Minimum Panel Thickness (in.)**													
12	1/2	1/2	1/2	1/2	1/2	1/2	1/2	1/2	1/2	1/2	1/2	1/2	1/2	1/2
16	1/2	1/2	1/2	1/2	1/2	1/2	1/2	1/2	1/2	1/2	25/32	-	-	-
BOARD SHEATHING (diagonally across 3 or more supports)														
Stud Spacing (inches, o.c.)	**Minimum Board Thickness (in.)**													
12	5/8	5/8	5/8	5/8	5/8	5/8	5/8	5/8	5/8	5/8	5/8	5/8	5/8	5/8
16	5/8	5/8	5/8	5/8	5/8	5/8	5/8	5/8	5/8	5/8	5/8	5/8	5/8	5/8
24	5/8	5/8	5/8	5/8	5/8	5/8	5/8	5/8	5/8	3/4	3/4	-	-	-

1. Strength axis is defined as the axis parallel to the face and back orientation of the flakes or the grain (veneer), which is generally the long panel direction, unless otherwise marked.
2. Sheathing shall be plywood with 4 or more plies or OSB.
3. Tabulated values assume a two-span continuous condition.
4. Minimim PS 1 or PS 2 panel span rating. Minimum nominal panel thickness for a given span rating is shown in parentheses.
5. Minimim panel span rating is based on calculation without use of increased values of cross-panel strength associated with Structural I sheathing. For Structural I sheathing, a smaller required span rating and smaller nominal panel thickness may be determined by calculations that account for increased cross-panel strength.

Copyright © American Wood Council. Downloaded/printed pursuant to License Agreement. No reproduction or transfer authorized.

Table 3.13B Wall Cladding Requirements for Wind Loads — Exposure B

Wind Speed 3-second gust (mph) (See Figure 1.1)	90	95	100	105	110	115	120	130	140	150	160	170	180	195
WOOD STRUCTURAL PANEL AND HARDBOARD PANEL SIDING (Strength Axis[1,2,3] Parallel to Supports)														
Stud Spacing (inches, o.c.)	**Minimum Panel Thickness (in.)**													
12	3/8	3/8	3/8	3/8	3/8	3/8	3/8	3/8	3/8	3/8	3/8	3/8	3/8	7/16
16	3/8	3/8	3/8	3/8	3/8	3/8	3/8	3/8	3/8	7/16	15/32	15/32	15/32	19/32
24[3]	3/8	3/8	3/8	3/8	3/8	7/16	7/16	15/32	19/32	19/32	19/32	19/32	23/32	23/32
HARDBOARD LAP SIDING (Strength Axis[2] Perpendicular to Supports)														
Stud Spacing (inches, o.c.)	**Minimum Board Thickness (in.)**													
12-16	7/16	7/16	7/16	7/16	7/16	7/16	7/16	7/16	7/16	7/16	7/16	7/16	7/16	7/16

1 Strength axis is defined as the axis parallel to the face and back orientation of the flakes or the grain (veneer), which is generally the long panel direction, unless otherwise marked.

2 Sheathing shall be plywood with 4 or more plies or OSB.

3 Tabulated values assume a two-span continuous condition.

Table 3.13B Wall Cladding Requirements for Wind Loads — Exposure C

Wind Speed 3-second gust (mph) (See Figure 1.1)	90	95	100	105	110	115	120	130	140	150	160	170	180	195
WOOD STRUCTURAL PANEL AND HARDBOARD PANEL SIDING (Strength Axis[1,2,3] Parallel to Supports)														
Stud Spacing (inches, o.c.)	**Minimum Panel Thickness (in.)**													
12	3/8	3/8	3/8	3/8	3/8	3/8	3/8	3/8	3/8	3/8	3/8	7/16	7/16	15/32
16	3/8	3/8	3/8	3/8	3/8	3/8	3/8	7/16	15/32	15/32	15/32	19/32	19/32	19/32
24[3]	3/8	3/8	7/16	15/32	15/32	15/32	19/32	19/32	19/32	19/32	23/32	23/32	23/32	-
HARDBOARD LAP SIDING (Strength Axis[2] Perpendicular to Supports)														
Stud Spacing (inches, o.c.)	**Minimum Board Thickness (in.)**													
12-16	7/16	7/16	7/16	7/16	7/16	7/16	7/16	7/16	7/16	7/16	7/16	7/16	7/16	7/16

1 Strength axis is defined as the axis parallel to the face and back orientation of the flakes or the grain (veneer), which is generally the long panel direction, unless otherwise marked.

2 Sheathing shall be plywood with 4 or more plies or OSB.

3 Tabulated values assume a two-span continuous condition.

Copyright © American Wood Council. Downloaded/printed pursuant to License Agreement. No reproduction or transfer authorized.

Table 3.14 Maximum Floor Sheathing Spans for Live Loads

Sheathing Type	Span Rating or Grade	Minimum Panel Performance Category (in.)	Maximum Floor Joist Spacing (in.)
Wood Structural Panels (Sheathing Grade, C-C, C-D, OSB)	**24/16**	**7/16**	16
	32/16	**15/32**	16
	40/20	**19/32**	19.2
	48/24	**23/32**	24
Wood Structural Panels (Single Floor Grades, Underlayment, C-C Plugged)	**16 o.c.**	**19/32**	16
	20 o.c.	**19/32**	19.2
	24 o.c.	**23/32**	24
	32 o.c.	**7/8**	24
	48 o.c.	**1-3/32**	24
Lumber Board Subflooring[1]	**#4 Common or Utility**	**5/8**	16
	#4 Common or Utility	**3/4**	24

1 Lumber Board Subflooring shall be limited to use with live loads of 40 psf or less.

Copyright © American Wood Council. Downloaded/printed pursuant to License Agreement. No reproduction or transfer authorized.
AMERICAN WOOD COUNCIL

Table 3.15 Minimum Attic Floor/Ceiling Length When Bracing Gable Endwall for Wind Loads

Exposure B

Assemblies	Roof Pitch	Roof Span (ft)	Wind Speed 3-second gust (mph) (See Figure 1.1) 90	95	100	105	110	115	120	130	140	150	160	170	180	195
			Length of Ceiling Diaphragm (ft)[1,2,3] (measured perpendicular to gable endwall)													
Sheathing Grade: Sheathing and Single-Floor **Attic Floor or Ceiling Diaphragm Bracing Gable Endwall** (Wind Parallel to Ridge)	1.5:12 -3:12	12	4	4	4	4	4	4	4	4	4	4	4	4	4	4
		24	8	8	8	8	8	8	8	8	8	8	8	8	8	8
		36	12	12	12	12	12	12	12	12	12	12	12	12	12	13
	4:12	12	4	4	4	4	4	4	4	4	4	4	4	4	4	4
		24	8	8	8	8	8	8	8	8	8	8	8	8	8	9
		36	12	12	12	12	12	12	12	12	12	12	12	12	12	14
	5:12	12	4	4	4	4	4	4	4	4	4	4	4	4	4	5
		24	8	8	8	8	8	8	8	8	8	8	8	8	8	9
		36	12	12	12	12	12	12	12	12	12	12	12	12	12	14
	6:12	12	4	4	4	4	4	4	4	4	4	4	4	4	4	5
		24	8	8	8	8	8	8	8	8	8	8	8	8	8	9
		36	12	12	12	12	12	12	12	12	12	12	12	12	13	15
	7:12	12	4	4	4	4	4	4	4	4	4	4	4	4	4	5
		24	8	8	8	8	8	8	8	8	8	8	8	8	8	10
		36	12	12	12	12	12	12	12	12	12	12	12	12	14	16
	8:12	12	4	4	4	4	4	4	4	4	4	4	4	4	4	5
		24	8	8	8	8	8	8	8	8	8	8	8	8	9	10
		36	12	12	12	12	12	12	12	12	12	12	12	13	14	17
	9:12	12	4	4	4	4	4	4	4	4	4	4	4	4	4	5
		24	8	8	8	8	8	8	8	8	8	8	8	8	9	10
		36	12	12	12	12	12	12	12	12	12	12	12	13	15	17
	10:12	12	4	4	4	4	4	4	4	4	4	4	4	4	4	5
		24	8	8	8	8	8	8	8	8	8	8	8	8	9	11
		36	12	12	12	12	12	12	12	12	12	12	12	14	15	18
	11:12	12	4	4	4	4	4	4	4	4	4	4	4	4	4	5
		24	8	8	8	8	8	8	8	8	8	8	8	8	9	11
		36	12	12	12	12	12	12	12	12	12	12	13	14	16	19
	12:12	12	4	4	4	4	4	4	4	4	4	4	4	4	4	5
		24	8	8	8	8	8	8	8	8	8	8	8	9	10	11
		36	12	12	12	12	12	12	12	12	12	12	13	15	17	20
Gypsum **Ceiling Diaphragm Bracing Gable Endwall** (Wind Parallel to Ridge)[4]	1.5:12-3:12	12	4	4	4	4	5	5	5	6	7	8	9	10	11	13
		24	8	8	8	8	9	9	10	12	14	16	18	20	23	26
		36	12	12	12	12	13	15	16	19	22	25	28	32	35	41
	4:12	12	4	4	4	4	5	5	5	6	7	8	9	10	12	14
		24	8	8	8	8	9	10	11	12	14	16	19	21	23	27
		36	12	12	12	13	14	16	17	20	23	26	30	33	37	44
	5:12	12	4	4	4	4	5	5	6	6	7	8	10	11	12	14
		24	8	8	8	9	9	10	11	13	15	17	19	22	24	29
		36	12	12	13	14	15	16	18	21	24	28	31	35	40	46
	6:12	12	4	4	4	4	5	5	6	7	8	9	10	11	12	14
		24	8	8	8	9	10	11	12	13	16	18	20	23	25	30
		36	12	12	13	15	16	17	19	22	25	29	33	37	42	49
	7:12	12	4	4	4	5	5	5	6	7	8	9	10	11	12	14
		24	8	8	8	9	10	11	12	14	16	18	21	24	26	31
		36	12	13	14	15	17	18	20	23	27	31	35	39	44	51
	8:12	12	4	4	4	5	5	5	6	7	8	9	10	11	13	15
		24	8	8	9	10	11	11	12	14	17	19	22	24	27	32
		36	12	13	15	16	17	19	21	24	28	32	36	41	46	54
	9:12	12	4	4	4	5	5	6	6	7	8	9	10	12	13	15
		24	8	8	9	10	11	12	13	15	17	20	22	25	28	33
		36	12	14	15	17	18	20	22	25	29	34	38	43	48	56
	10:12	12	4	4	4	5	5	6	6	7	8	9	11	12	13	15
		24	8	9	9	10	11	12	13	15	18	20	23	26	29	34
		36	13	14	16	17	19	21	23	26	31	35	40	45	50	59
	11:12	12	4	4	4	5	5	6	6	7	8	9	11	12	13	16
		24	8	9	10	11	12	13	14	16	18	21	24	27	30	35
		36	13	15	16	18	20	22	24	28	32	36	41	47	52	61
	12:12	12	4	4	5	5	5	6	6	7	8	10	11	12	14	16
		24	8	9	10	11	12	13	14	16	19	22	25	28	31	36
		36	14	16	17	19	21	23	24	29	33	38	43	49	54	64

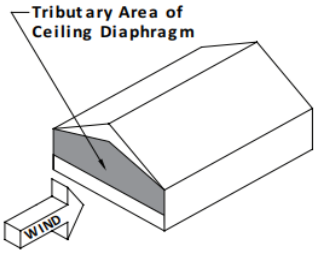

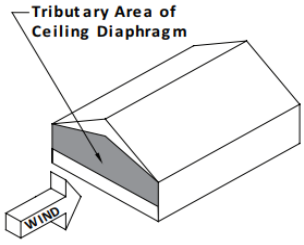

See footnotes 1-4.

Copyright © American Wood Council. Downloaded/printed pursuant to License Agreement. No reproduction or transfer authorized.

Table 3.15 Minimum Attic Floor/Ceiling Length When Bracing Gable Endwall for Wind Loads

Exposure C

Assemblies	Roof Pitch	Roof Span (ft)	Wind Speed 3-second gust (mph) (See Figure 1.1) 90	95	100	105	110	115	120	130	140	150	160	170	180	195
			Length of Ceiling Diaphragm (ft)[1,2,3] (measured perpendicular to gable endwall)													
Sheathing Grade: Sheathing and Single-Floor **Attic Floor or Ceiling Diaphragm Bracing Gable Endwall** (Wind Parallel to Ridge)	**1.5:12 -3:12**	**12**	4	4	4	4	4	4	4	4	4	4	4	5	5	6
		24	8	8	8	8	8	8	8	8	8	8	8	9	10	11
		36	12	12	12	12	12	12	12	12	12	12	12	13	15	18
	4:12	**12**	4	4	4	4	4	4	4	4	4	4	4	5	5	6
		24	8	8	8	8	8	8	8	8	8	8	8	9	10	12
		36	12	12	12	12	12	12	12	12	12	12	13	14	16	19
	5:12	**12**	4	4	4	4	4	4	4	4	4	4	4	5	5	6
		24	8	8	8	8	8	8	8	8	8	8	8	9	11	12
		36	12	12	12	12	12	12	12	12	12	12	13	15	17	20
	6:12	**12**	4	4	4	4	4	4	4	4	4	4	4	5	5	6
		24	8	8	8	8	8	8	8	8	8	8	9	10	11	13
		36	12	12	12	12	12	12	12	12	12	12	14	16	18	21
	7:12	**12**	4	4	4	4	4	4	4	4	4	4	4	5	5	6
		24	8	8	8	8	8	8	8	8	8	8	9	10	11	13
		36	12	12	12	12	12	12	12	12	12	13	15	17	19	22
	8:12	**12**	4	4	4	4	4	4	4	4	4	4	5	5	6	6
		24	8	8	8	8	8	8	8	8	8	8	9	11	12	14
		36	12	12	12	12	12	12	12	12	12	14	16	17	20	23
	9:12	**12**	4	4	4	4	4	4	4	4	4	4	5	5	6	7
		24	8	8	8	8	8	8	8	8	8	9	10	11	12	14
		36	12	12	12	12	12	12	12	12	13	14	16	18	20	24
	10:12	**12**	4	4	4	4	4	4	4	4	4	4	5	5	6	7
		24	8	8	8	8	8	8	8	8	8	9	10	11	13	15
		36	12	12	12	12	12	12	12	12	13	15	17	19	21	25
	11:12	**12**	4	4	4	4	4	4	4	4	4	4	5	5	6	7
		24	8	8	8	8	8	8	8	8	8	9	10	12	13	15
		36	12	12	12	12	12	12	12	12	14	16	18	20	22	26
	12:12	**12**	4	4	4	4	4	4	4	4	4	4	5	5	6	7
		24	8	8	8	8	8	8	8	8	8	9	11	12	13	16
		36	12	12	12	12	12	12	12	12	14	16	18	21	23	27
Gypsum **Ceiling Diaphragm Bracing Gable Endwall** (Wind Parallel to Ridge)[4]	**1.5:12 -3:12**	**12**	4	5	5	6	6	7	7	8	10	11	12	14	16	18
		24	8	9	10	11	12	13	14	16	19	22	25	28	31	36
		36	13	14	15	17	19	20	22	26	30	34	39	44	49	57
	4:12	**12**	4	5	5	6	6	7	7	9	10	11	13	14	16	19
		24	8	9	10	11	12	14	15	17	20	23	26	29	32	38
		36	13	15	16	18	20	21	23	27	32	36	41	46	52	61
	5:12	**12**	4	5	5	6	6	7	8	9	10	12	13	15	16	19
		24	9	10	11	12	13	14	15	18	21	24	27	30	34	40
		36	14	16	17	19	21	23	25	29	33	38	43	49	55	64
	6:12	**12**	5	5	6	6	7	7	8	9	10	12	13	15	17	20
		24	9	10	11	12	13	15	16	19	21	25	28	31	35	41
		36	15	16	18	20	22	24	26	30	35	40	46	51	58	68
	7:12	**12**	5	5	6	6	7	7	8	9	11	12	14	15	17	20
		24	9	11	12	13	14	15	16	19	22	25	29	33	36	43
		36	16	17	19	21	23	25	27	32	37	42	48	54	61	71
	8:12	**12**	5	5	6	6	7	7	8	9	11	12	14	16	17	20
		24	10	11	12	13	14	16	17	20	23	26	30	34	38	44
		36	16	18	20	22	24	26	29	33	39	44	50	57	64	75
	9:12	**12**	5	5	6	6	7	8	8	10	11	12	14	16	18	21
		24	10	11	12	14	15	16	18	21	24	27	31	35	39	46
		36	17	19	21	23	25	27	30	35	40	46	53	59	67	78
	10:12	**12**	5	5	6	6	7	8	8	10	11	13	14	16	18	21
		24	10	12	13	14	15	17	18	21	25	28	32	36	40	47
		36	18	20	22	24	26	29	31	36	42	48	55	62	70	81
	11:12	**12**	5	6	6	7	7	8	8	10	11	13	15	17	18	22
		24	11	12	13	15	16	17	19	22	25	29	33	37	42	49
		36	18	21	23	25	27	30	32	38	44	50	57	65	72	85
	12:12	**12**	5	6	6	7	7	8	9	10	12	13	15	17	19	22
		24	11	12	14	15	16	18	19	23	26	30	34	38	43	50
		36	19	21	24	26	28	31	34	40	46	53	60	67	75	88

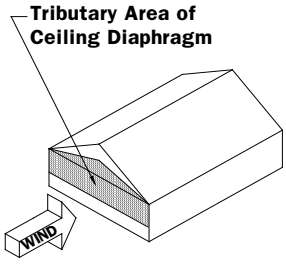

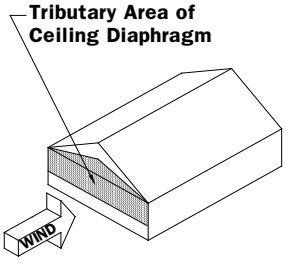

See footnotes 1-4.

Copyright © American Wood Council. Downloaded/printed pursuant to License Agreement. No reproduction or transfer authorized.

Footnotes to Table 3.15

1 Tabulated attic floor or ceiling length requirements assume sheathing continuous from gable-end to gable-end. For an attic floor or ceiling bracing only one gable-end, the tabulated length requirement shall be permitted to be multiplied by 0.84. In no case shall the length requirement be less than one-third of the distance between bracing walls for gypsum ceilings or one-third of the distance for attic floors or ceilings sheathed with structural sheathing.

2 Tabulated length requirements are based on 10 foot wall heights. For other wall heights, H, the tabulated length requirements shall be multiplied by (H+1)/10.

3 Attic floor or ceiling diaphragms are not required for hip roof systems.

4 Tabulated gypsum ceiling requirements shall be permitted to be multiplied by 0.78 when ceiling framing is spaced at 16 inches o.c. or less.

Copyright © American Wood Council. Downloaded/printed pursuant to License Agreement. No reproduction or transfer authorized.
AMERICAN WOOD COUNCIL

Table 3.16A1 Roof Diaphragm Limits for Wind [1]

(Applicable to All Roof Slopes with and without Roof Irregularities)

Exposure B All Slopes

Wind Speed 3-second gust (mph) (See Figure 1.1)		90		95		100		105		110		115		120		130		140		150		160		170		180		195	
Maximum Top Plate to Ridge Height (ft)	Roof Diaphragm Width (ft) [2]	Roof Diaphragm Length (ft) [3]																											
		Min	Max	Min	Max	Min	Max	Min	Max	Min	Max	Min	Max	Min	Max	Min	Max	Min	Max	Min	Max	Min	Max	Min	Max	Min	Max	Min	Max
5	12	4	36	4	36	4	36	4	36	4	36	4	36	4	36	4	36	4	36	4	36	4	35	4	31	5	28	6	24
	16	6	48	6	48	6	48	6	48	6	48	6	48	6	48	6	48	6	48	6	48	6	47	6	42	6	37	7	32
	20	7	60	7	60	7	60	7	60	7	60	7	60	7	60	7	60	7	60	7	60	7	59	7	52	8	47	9	40
	24	8	72	8	72	8	72	8	72	8	72	8	72	8	72	8	72	8	72	8	72	8	71	8	63	9	56	11	48
	28	10	80	10	80	10	80	10	80	10	80	10	80	10	80	10	80	10	80	10	80	10	80	10	74	11	66	13	56
	32	11	80	11	80	11	80	11	80	11	80	11	80	11	80	11	80	11	80	11	80	11	80	11	80	12	75	14	64
	36	12	80	12	80	12	80	12	80	12	80	12	80	12	80	12	80	12	80	12	80	12	80	12	80	14	80	16	72
10	12	4	36	4	36	4	36	4	36	4	36	4	36	4	36	4	36	4	33	5	28	5	25	6	22	6	20	7	17
	16	6	48	6	48	6	48	6	48	6	48	6	48	6	48	6	48	6	44	6	38	7	33	8	30	8	26	10	22
	20	7	60	7	60	7	60	7	60	7	60	7	60	7	60	7	60	7	55	7	48	8	42	9	37	10	33	12	28
	24	8	72	8	72	8	72	8	72	8	72	8	72	8	72	8	72	8	66	9	57	10	50	11	45	12	40	14	34
	28	10	80	10	80	10	80	10	80	10	80	10	80	10	80	10	80	10	77	10	67	11	59	13	52	14	46	17	39
	32	11	80	11	80	11	80	11	80	11	80	11	80	11	80	11	80	11	80	12	77	13	67	15	60	16	53	19	45
	36	12	80	12	80	12	80	12	80	12	80	12	80	12	80	12	80	12	80	13	80	15	76	16	67	18	60	21	51
15	12	4	36	4	36	4	36	4	36	4	36	4	36	4	35	4	29	5	25	6	22	6	19	7	17	8	15	9	13
	16	6	48	6	48	6	48	6	48	6	48	6	48	6	46	6	39	7	34	7	29	8	26	9	23	10	20	12	17
	20	7	60	7	60	7	60	7	60	7	60	7	60	7	58	7	49	8	42	9	37	10	32	12	29	13	26	15	22
	24	8	72	8	72	8	72	8	72	8	72	8	72	8	70	8	59	10	51	11	44	12	39	14	34	15	31	18	26
	28	10	80	10	80	10	80	10	80	10	80	10	80	10	80	10	69	11	60	13	52	14	46	16	40	18	36	21	31
	32	11	80	11	80	11	80	11	80	11	80	11	80	11	80	11	79	13	68	14	59	16	52	18	46	20	41	24	35
	36	12	80	12	80	12	80	12	80	12	80	12	80	12	80	12	80	14	77	16	67	18	59	20	52	23	46	27	39
20	12	4	36	4	36	4	36	4	36	4	34	4	31	4	28	5	24	6	21	7	18	8	16	8	14	9	12		
	16	6	48	6	48	6	48	6	48	6	45	6	41	6	38	7	32	8	28	9	24	10	21	11	19	12	16		
	20	7	60	7	60	7	60	7	60	7	56	7	52	7	47	8	40	10	35	11	30	12	26	14	23	15	21		
	24	8	72	8	72	8	72	8	72	8	68	8	62	8	57	10	48	11	42	13	36	15	32	16	28	18	25		
	28	10	80	10	80	10	80	10	80	10	79	10	72	10	66	11	57	13	49	15	42	17	37	19	33	21	29		
	32	11	80	11	80	11	80	11	80	11	80	11	80	11	76	13	65	15	56	17	48	19	43	22	38	24	33		
	36	12	80	12	80	12	80	12	80	12	80	12	80	12	80	14	73	17	63	19	55	22	48	24	42	27	38		

[1] Roof sheathing applied with long dimension perpendicular to roof framing and staggered.

[2] Roof diaphragm width dimension measured parallel to direction of framing span.

[3] Roof diaphragm length dimension measured perpendicular to direction of framing span.

Copyright © American Wood Council. Downloaded/printed pursuant to License Agreement. No reproduction or transfer authorized.
AMERICAN WOOD COUNCIL

Table 3.16A2 Roof Diaphragm Limits for Wind [1]

(Applicable to Simple Gable and Hip Roofs with Roof Slopes ≤ 6:12 without Roof Irregularities—dormers, accent panels, etc)

Exposure B Low Slopes

Wind Speed 3-second gust (mph) (See Figure 1.1)		90		95		100		105		110		115		120		130		140		150		160		170		180		195	
Maximum Top Plate to Ridge Height (ft)	Roof Diaphragm Width (ft) [2]	Roof Diaphragm Length (ft) [3]																											
		Min	Max	Min	Max	Min	Max	Min	Max	Min	Max	Min	Max	Min	Max	Min	Max	Min	Max	Min	Max	Min	Max	Min	Max	Min	Max	Min	Max
0[4] (flat roof)	12	4	36	4	36	4	36	4	36	4	36	4	36	4	36	4	36	4	36	4	36	4	36	4	36	4	36	4	36
	16	6	48	6	48	6	48	6	48	6	48	6	48	6	48	6	48	6	48	6	48	6	48	6	48	6	48	6	48
	20	7	60	7	60	7	60	7	60	7	60	7	60	7	60	7	60	7	60	7	60	7	60	7	60	7	60	7	60
	24	8	72	8	72	8	72	8	72	8	72	8	72	8	72	8	72	8	72	8	72	8	72	8	72	8	72	8	72
	28	10	80	10	80	10	80	10	80	10	80	10	80	10	80	10	80	10	80	10	80	10	80	10	80	10	80	10	80
	32	11	80	11	80	11	80	11	80	11	80	11	80	11	80	11	80	11	80	11	80	11	80	11	80	11	80	11	80
	36	12	80	12	80	12	80	12	80	12	80	12	80	12	80	12	80	12	80	12	80	12	80	12	80	12	80	12	80
5	12	4	36	4	36	4	36	4	36	4	36	4	36	4	36	4	36	4	36	4	36	4	36	4	36	5	34	6	29
	16	6	48	6	48	6	48	6	48	6	48	6	48	6	48	6	48	6	48	6	48	6	48	6	48	6	45	7	38
	20	7	60	7	60	7	60	7	60	7	60	7	60	7	60	7	60	7	60	7	60	7	60	7	60	8	57	9	48
	24	8	72	8	72	8	72	8	72	8	72	8	72	8	72	8	72	8	72	8	72	8	72	8	72	9	68	11	58
	28	10	80	10	80	10	80	10	80	10	80	10	80	10	80	10	80	10	80	10	80	10	80	10	80	11	79	13	68
	32	11	80	11	80	11	80	11	80	11	80	11	80	11	80	11	80	11	80	11	80	11	80	11	80	12	80	14	77
	36	12	80	12	80	12	80	12	80	12	80	12	80	12	80	12	80	12	80	12	80	12	80	12	80	14	80	16	80
10	12	4	36	4	36	4	36	4	36	4	36	4	36	4	36	4	36	4	36	5	36	5	34	6	30	6	27	7	23
	16	6	48	6	48	6	48	6	48	6	48	6	48	6	48	6	48	6	48	6	48	7	45	8	40	8	36	10	30
	20	7	60	7	60	7	60	7	60	7	60	7	60	7	60	7	60	7	60	7	60	8	57	9	50	10	45	12	38
	24	8	72	8	72	8	72	8	72	8	72	8	72	8	72	8	72	8	72	9	72	10	68	11	60	12	54	14	46
	28	10	80	10	80	10	80	10	80	10	80	10	80	10	80	10	80	10	80	10	80	11	80	13	71	14	63	17	54
	32	11	80	11	80	11	80	11	80	11	80	11	80	11	80	11	80	11	80	12	80	13	80	15	80	16	72	19	61
	36	12	80	12	80	12	80	12	80	12	80	12	80	12	80	12	80	12	80	13	80	15	80	16	80	18	80	21	69

1 Roof sheathing applied with long dimension perpendicular to roof framing and staggered.

2 Roof diaphragm width dimension measured parallel to direction of framing span.

3 Roof diaphragm length dimension measured perpendicular to direction of framing span.

4 Tabulated values for flat roof case are included for interpolation.

Copyright © American Wood Council. Downloaded/printed pursuant to License Agreement. No reproduction or transfer authorized.
AMERICAN WOOD COUNCIL

Table 3.16A3 Roof Diaphragm Limits for Wind [1]

(Applicable to All Roof Slopes with and without Roof Irregularities)

Exposure C All Slopes

Wind Speed 3-second gust (mph) (See Figure 1.1)		90		95		100		105		110		115		120		130		140		150		160		170		180		195	
Maximum Top Plate to Ridge Height (ft)	Roof Diaphragm Width (ft) [2]	Roof Diaphragm Length (ft) [3]																											
		Min	Max	Min	Max	Min	Max	Min	Max	Min	Max	Min	Max	Min	Max	Min	Max	Min	Max	Min	Max	Min	Max	Min	Max	Min	Max	Min	Max
5	12	4	36	4	36	4	36	4	36	4	36	4	36	4	36	4	36	4	33	5	29	5	25	6	22	7	20	8	17
	16	6	48	6	48	6	48	6	48	6	48	6	48	6	48	6	48	6	44	6	39	7	34	8	30	9	27	10	23
	20	7	60	7	60	7	60	7	60	7	60	7	60	7	60	7	60	7	56	8	48	9	42	10	38	11	33	13	28
	24	8	72	8	72	8	72	8	72	8	72	8	72	8	72	8	72	8	67	9	58	10	51	12	45	13	40	15	34
	28	10	80	10	80	10	80	10	80	10	80	10	80	10	80	10	80	10	78	11	68	12	60	13	53	15	47	17	40
	32	11	80	11	80	11	80	11	80	11	80	11	80	11	80	11	80	11	80	12	78	14	68	15	60	17	54	20	46
	36	12	80	12	80	12	80	12	80	12	80	12	80	12	80	12	80	12	80	13	80	15	77	17	68	19	61	22	52
10	12	4	36	4	36	4	36	4	36	4	36	4	35	4	32	5	27	6	23	6	20	7	18	8	16	9	14	10	12
	16	6	48	6	48	6	48	6	48	6	48	6	47	6	43	6	37	7	31	8	27	9	24	10	21	12	19	13	16
	20	7	60	7	60	7	60	7	60	7	60	7	59	7	54	8	46	9	39	10	34	11	30	13	27	14	24	17	20
	24	8	72	8	72	8	72	8	72	8	72	8	70	8	65	9	55	11	47	12	41	14	36	15	32	17	28	20	24
	28	10	80	10	80	10	80	10	80	10	80	10	80	10	76	11	64	12	55	14	48	16	42	18	37	20	33	23	28
	32	11	80	11	80	11	80	11	80	11	80	11	80	11	80	12	74	14	63	16	55	18	48	20	43	23	38	26	32
	36	12	80	12	80	12	80	12	80	12	80	12	80	12	80	13	80	16	71	18	62	20	55	23	48	25	43	30	37
15	12	4	36	4	36	4	36	4	33	4	30	5	27	5	25	6	21	7	18	8	16	9	14	10	12				
	16	6	48	6	48	6	48	6	44	6	40	6	36	7	33	8	28	9	24	10	21	11	18	13	16				
	20	7	60	7	60	7	60	7	55	7	50	8	45	8	42	9	35	11	30	12	26	14	23	16	20				
	24	8	72	8	72	8	72	8	66	8	60	9	55	10	50	11	43	13	37	15	32	17	28	19	25				
	28	10	80	10	80	10	80	10	77	10	70	10	64	11	58	13	50	15	43	17	37	20	33	22	29				
	32	11	80	11	80	11	80	11	80	11	80	12	73	13	67	15	57	17	49	20	43	22	37	25	33				
	36	12	80	12	80	12	80	12	80	12	80	13	80	14	75	17	64	19	55	22	48	25	42	28	37				
20	12	4	36	4	32	4	29	5	26	5	24	6	22	6	20	7	17	8	15	9	13								
	16	6	48	6	43	6	39	6	35	7	32	7	29	8	27	9	23	11	20	12	17								
	20	7	60	7	54	7	49	8	44	8	40	9	37	10	34	11	29	13	25	15	22								
	24	8	72	8	65	8	59	9	53	10	49	11	44	12	41	13	35	16	30	18	26								
	28	10	80	10	76	10	69	10	62	11	57	12	52	13	48	16	41	18	35	21	30								
	32	11	80	11	80	11	79	12	71	13	65	14	59	15	55	18	46	21	40	23	35								
	36	12	80	12	80	12	80	13	80	14	73	16	67	17	61	20	52	23	45	26	39								

1 Roof sheathing applied with long dimension perpendicular to roof framing and staggered.

2 Roof diaphragm width dimension measured parallel to direction of framing span.

3 Roof diaphragm length dimension measured perpendicular to direction of framing span.

Copyright © American Wood Council. Downloaded/printed pursuant to License Agreement. No reproduction or transfer authorized.
AMERICAN WOOD COUNCIL

Table 3.16A4 Roof Diaphragm Limits for Wind [1]

(Applicable to Simple Gable and Hip Roofs with Roof Slopes ≤ 6:12 without Roof Irregularities—dormers, accent panels, etc)

Exposure C Low Slopes

Wind Speed 3-second gust (mph) (See Figure 1.1)		90		95		100		105		110		115		120		130		140		150		160		170		180		195	
Maximum Top Plate to Ridge Height (ft)	Roof Diaphragm Width (ft) [2]	Roof Diaphragm Length (ft) [3]																											
		Min	Max	Min	Max	Min	Max	Min	Max	Min	Max	Min	Max	Min	Max	Min	Max	Min	Max	Min	Max	Min	Max	Min	Max	Min	Max	Min	Max
0[4] (flat roof)	12	4	36	4	36	4	36	4	36	4	36	4	36	4	36	4	36	4	36	4	36	4	36	4	36	5	33	5	28
	16	6	48	6	48	6	48	6	48	6	48	6	48	6	48	6	48	6	48	6	48	6	48	6	48	6	44	7	37
	20	7	60	7	60	7	60	7	60	7	60	7	60	7	60	7	60	7	60	7	60	7	60	7	60	7	55	9	47
	24	8	72	8	72	8	72	8	72	8	72	8	72	8	72	8	72	8	72	8	72	8	72	8	72	9	66	10	56
	28	10	80	10	80	10	80	10	80	10	80	10	80	10	80	10	80	10	80	10	80	10	80	10	80	10	77	12	66
	32	11	80	11	80	11	80	11	80	11	80	11	80	11	80	11	80	11	80	11	80	11	80	11	80	12	80	13	75
	36	12	80	12	80	12	80	12	80	12	80	12	80	12	80	12	80	12	80	12	80	12	80	12	80	13	80	15	80
5	12	4	36	4	36	4	36	4	36	4	36	4	36	4	36	4	36	4	36	5	35	5	31	6	27	7	24	8	21
	16	6	48	6	48	6	48	6	48	6	48	6	48	6	48	6	48	6	48	6	47	7	41	8	36	9	32	10	28
	20	7	60	7	60	7	60	7	60	7	60	7	60	7	60	7	60	7	60	8	59	9	52	10	46	11	41	13	35
	24	8	72	8	72	8	72	8	72	8	72	8	72	8	72	8	72	8	72	9	71	10	62	12	55	13	49	15	42
	28	10	80	10	80	10	80	10	80	10	80	10	80	10	80	10	80	10	80	11	80	12	72	13	64	15	57	17	49
	32	11	80	11	80	11	80	11	80	11	80	11	80	11	80	11	80	11	80	12	80	14	80	15	73	17	65	20	56
	36	12	80	12	80	12	80	12	80	12	80	12	80	12	80	12	80	12	80	13	80	15	80	17	80	19	73	22	63
10	12	4	36	4	36	4	36	4	36	4	36	4	36	4	36	5	36	6	32	6	28	7	24	8	21	9	19	10	16
	16	6	48	6	48	6	48	6	48	6	48	6	48	6	48	6	48	7	43	8	37	9	33	10	29	12	26	13	22
	20	7	60	7	60	7	60	7	60	7	60	7	60	7	60	8	60	9	53	10	46	11	41	13	36	14	32	17	27
	24	8	72	8	72	8	72	8	72	8	72	8	72	8	72	9	72	11	64	12	56	14	49	15	43	17	39	20	33
	28	10	80	10	80	10	80	10	80	10	80	10	80	10	80	11	80	12	75	14	65	16	57	18	51	20	45	23	38
	32	11	80	11	80	11	80	11	80	11	80	11	80	11	80	12	80	14	80	16	75	18	66	20	58	23	52	26	44
	36	12	80	12	80	12	80	12	80	12	80	12	80	12	80	13	80	16	80	18	80	20	74	23	65	25	58	30	50

1 Roof sheathing applied with long dimension perpendicular to roof framing and staggered.

2 Roof diaphragm width dimension measured parallel to direction of framing span.

3 Roof diaphragm length dimension measured perpendicular to direction of framing span.

4 Tabulated values for flat roof case are included for interpolation.

Copyright © American Wood Council. Downloaded/printed pursuant to License Agreement. No reproduction or transfer authorized.
AMERICAN WOOD COUNCIL

Table 3.16B Floor Diaphragm Limits for Wind [1]

Exposure B

Wind Speed 3-second gust (mph) (See Figure 1.1)		90		95		100		105		110		115		120		130		140		150		160		170		180		195	
Wall Height (ft)	Floor Diaphragm Width (ft) [2]	Floor Diaphragm Length (ft) [3]																											
		Min	Max	Min	Max	Min	Max	Min	Max	Min	Max	Min	Max	Min	Max	Min	Max	Min	Max	Min	Max	Min	Max	Min	Max	Min	Max	Min	Max
8	12	4	36	4	36	4	36	4	36	4	36	4	36	4	36	4	36	4	36	4	35	5	31	5	27	6	24	7	21
	16	6	48	6	48	6	48	6	48	6	48	6	48	6	48	6	48	6	48	6	47	6	42	7	37	7	33	9	28
	20	7	60	7	60	7	60	7	60	7	60	7	60	7	60	7	60	7	60	7	59	7	52	8	46	9	41	11	35
	24	8	72	8	72	8	72	8	72	8	72	8	72	8	72	8	72	8	72	8	71	9	63	10	55	11	49	13	42
	28	10	80	10	80	10	80	10	80	10	80	10	80	10	80	10	80	10	80	10	80	10	73	11	65	13	58	15	49
	32	11	80	11	80	11	80	11	80	11	80	11	80	11	80	11	80	11	80	11	80	11	80	13	74	14	66	17	56
	36	12	80	12	80	12	80	12	80	12	80	12	80	12	80	12	80	12	80	12	80	13	80	14	80	16	74	19	63
10	12	4	36	4	36	4	36	4	36	4	36	4	36	4	36	4	36	4	33	5	29	6	25	6	22	7	20	8	17
	16	6	48	6	48	6	48	6	48	6	48	6	48	6	48	6	48	6	45	6	39	7	34	8	30	9	27	11	23
	20	7	60	7	60	7	60	7	60	7	60	7	60	7	60	7	60	7	56	8	49	9	43	10	38	11	34	13	29
	24	8	72	8	72	8	72	8	72	8	72	8	72	8	72	8	72	8	67	9	58	11	51	12	45	13	40	15	34
	28	10	80	10	80	10	80	10	80	10	80	10	80	10	80	10	80	10	78	11	68	12	60	14	53	15	47	18	40
	32	11	80	11	80	11	80	11	80	11	80	11	80	11	80	11	80	11	80	12	78	14	68	16	61	17	54	20	46
	36	12	80	12	80	12	80	12	80	12	80	12	80	12	80	12	80	12	80	14	80	16	77	18	68	20	61	23	52

1 Floor sheathing applied with long dimension perpendicular to floor framing and staggered.

2 Floor diaphragm width dimension measured parallel to direction of framing span.

3 Floor diaphragm length dimension measured perpendicular to direction of framing span.

Copyright © American Wood Council. Downloaded/printed pursuant to License Agreement. No reproduction or transfer authorized.
AMERICAN WOOD COUNCIL

Table 3.16B Floor Diaphragm Limits for Wind [1]

Exposure C

Wind Speed 3-second gust (mph) (See Figure 1.1)		90		95		100		105		110		115		120		130		140		150		160		170		180		195	
Wall Height (ft)	Floor Diaphragm Width (ft) [2]	Floor Diaphragm Length (ft) [3]																											
		Min	Max	Min	Max	Min	Max	Min	Max	Min	Max	Min	Max	Min	Max	Min	Max	Min	Max	Min	Max	Min	Max	Min	Max	Min	Max	Min	Max
8	12	4	36	4	36	4	36	4	36	4	36	4	36	4	36	4	34	5	29	6	25	6	22	7	20	8	17	9	15
	16	6	48	6	48	6	48	6	48	6	48	6	48	6	48	6	45	6	39	7	34	8	30	9	26	10	23	12	20
	20	7	60	7	60	7	60	7	60	7	60	7	60	7	60	7	57	8	49	9	43	10	37	11	33	13	29	15	25
	24	8	72	8	72	8	72	8	72	8	72	8	72	8	72	8	68	9	59	11	51	12	45	13	40	15	35	17	30
	28	10	80	10	80	10	80	10	80	10	80	10	80	10	80	10	80	11	69	12	60	14	53	16	47	17	41	20	35
	32	11	80	11	80	11	80	11	80	11	80	11	80	11	80	11	80	12	79	14	69	16	60	18	53	20	47	23	40
	36	12	80	12	80	12	80	12	80	12	80	12	80	12	80	12	80	14	80	16	77	18	68	20	60	22	53	26	45
10	12	4	36	4	36	4	36	4	36	4	36	4	36	4	33	5	28	6	24	7	21	7	18	8	16	9	14	11	12
	16	6	48	6	48	6	48	6	48	6	48	6	48	6	44	7	37	8	32	9	28	10	24	11	21	12	19	15	16
	20	7	60	7	60	7	60	7	60	7	60	7	60	7	55	8	46	9	40	11	35	12	31	14	27	15	24	18	20
	24	8	72	8	72	8	72	8	72	8	72	8	72	8	66	10	56	11	48	13	42	14	37	16	32	18	29	21	25
	28	10	80	10	80	10	80	10	80	10	80	10	80	10	77	11	65	13	56	15	49	17	43	19	38	21	34	25	29
	32	11	80	11	80	11	80	11	80	11	80	11	80	11	80	13	75	15	64	17	56	19	49	22	43	24	39	28	33
	36	12	80	12	80	12	80	12	80	12	80	12	80	12	80	14	80	17	72	19	63	21	55	24	49	27	44	32	37

1 Floor sheathing applied with long dimension perpendicular to floor framing and staggered.

2 Floor diaphragm width dimension measured parallel to direction of framing span.

3 Floor diaphragm length dimension measured perpendicular to direction of framing span.

Copyright © American Wood Council. Downloaded/printed pursuant to License Agreement. No reproduction or transfer authorized.
AMERICAN WOOD COUNCIL

Table 3.16C1 Diaphragm Limits for Seismic GSL = 30

(Dead Load Assumptions: Roof/ceiling = 15 psf, Floor = 12 psf, Partition = 8 psf, Wall = 110 plf; Ground Snow Load = 30 psf; Lateral force resisting system: Wood structural panel shear walls)

Diaphragm	Minimum Diaphragm Dimension, W (ft)	SDC A		SDC B		SDC C	
		Diaphragm Load Ratio[3]	Maximum Diaphragm Dimension, L[1,2,4] ft	Diaphragm Load Ratio[3]	Maximum Diaphragm Dimension, L[1,2,4] ft	Diaphragm Load Ratio[3]	Maximum Diaphragm Dimension, L[1,2,4] ft
Roof/Ceiling	12	0.07	36	0.14	36	0.22	36
	16	0.08	48	0.16	48	0.25	48
	20	0.10	60	0.19	60	0.28	60
	24	0.11	72	0.21	72	0.32	72
	28	0.11	80	0.22	80	0.34	80
	32	0.11	80	0.21	80	0.32	80
	36	0.11	80	0.21	80	0.31	80
Floor	12	0.07	36	0.14	36	0.22	36
	16	0.09	48	0.17	48	0.25	48
	20	0.10	60	0.19	60	0.29	60
	24	0.11	72	0.21	72	0.32	72
	28	0.12	80	0.23	80	0.34	80
	32	0.11	80	0.22	80	0.33	80
	36	0.11	80	0.21	80	0.32	80

Diaphragm	Minimum Diaphragm Dimension, W (ft)	SDC D_0		SDC D_1		SDC D_2	
		Diaphragm Load Ratio[3]	Maximum Diaphragm Dimension, L[1,2,4] ft	Diaphragm Load Ratio[3]	Maximum Diaphragm Dimension, L[1,2,4] ft	Diaphragm Load Ratio[3]	Maximum Diaphragm Dimension, L[1,2,4] ft
Roof/Ceiling	12	0.29	36	0.36	36	0.51	36
	16	0.33	48	0.41	48	0.58	48
	20	0.38	60	0.47	60	0.66	60
	24	0.43	72	0.53	72	0.74	72
	28	0.45	80	0.56	80	0.78	80
	32	0.43	80	0.54	80	0.76	80
	36	0.42	80	0.52	80	0.73	80
Floor	12	0.29	36	0.36	36	0.51	36
	16	0.34	48	0.42	48	0.59	48
	20	0.39	60	0.48	60	0.67	60
	24	0.43	72	0.54	72	0.76	72
	28	0.46	80	0.57	80	0.80	80
	32	0.44	80	0.55	80	0.77	80
	36	0.43	80	0.53	80	0.75	80

See footnotes 1-4.

Copyright © American Wood Council. Downloaded/printed pursuant to License Agreement. No reproduction or transfer authorized.
AMERICAN WOOD COUNCIL

Table 3.16C2 Diaphragm Limits for Seismic GSL = 50

(Dead Load Assumptions: Roof/ceiling = 15 psf, Floor = 12 psf, Partition = 8 psf, Wall = 110 plf; Ground Snow Load = 50 psf; Lateral force resisting system: Wood structural panel shear walls)

Diaphragm	Minimum Diaphragm Dimension, W (ft)	SDC A		SDC B		SDC C	
		Diaphragm Load Ratio[3]	Maximum Diaphragm Dimension, L[1,2,4] ft	Diaphragm Load Ratio[3]	Maximum Diaphragm Dimension, L[1,2,4] ft	Diaphragm Load Ratio[3]	Maximum Diaphragm Dimension, L[1,2,4] ft
Roof/Ceiling	12	0.10	36	0.20	36	0.30	36
	16	0.12	48	0.23	48	0.35	48
	20	0.14	60	0.26	60	0.40	60
	24	0.15	72	0.30	72	0.45	72
	28	0.16	80	0.32	80	0.48	80
	32	0.16	80	0.31	80	0.47	80
	36	0.15	80	0.30	80	0.45	80
Floor	12	0.07	36	0.14	36	0.22	36
	16	0.09	48	0.17	48	0.25	48
	20	0.10	60	0.19	60	0.29	60
	24	0.11	72	0.21	72	0.32	72
	28	0.12	80	0.23	80	0.34	80
	32	0.11	80	0.22	80	0.33	80
	36	0.11	80	0.21	80	0.32	80

Diaphragm	Minimum Diaphragm Dimension, W (ft)	SDC D_0		SDC D_1		SDC D_2	
		Diaphragm Load Ratio[3]	Maximum Diaphragm Dimension, L[1,2,4] ft	Diaphragm Load Ratio[3]	Maximum Diaphragm Dimension, L[1,2,4] ft	Diaphragm Load Ratio[3]	Maximum Diaphragm Dimension, L[1,2,4] ft
Roof/Ceiling	12	0.40	36	0.49	36	0.69	36
	16	0.47	48	0.58	48	0.81	48
	20	0.53	60	0.66	60	0.93	60
	24	0.60	72	0.75	72	1.00	68
	28	0.64	80	0.80	80	1.00	71
	32	0.62	80	0.77	80	1.00	74
	36	0.61	80	0.75	80	1.00	75
Floor	12	0.29	36	0.36	36	0.51	36
	16	0.34	48	0.42	48	0.59	48
	20	0.39	60	0.48	60	0.67	60
	24	0.43	72	0.54	72	0.76	72
	28	0.46	80	0.57	80	0.80	80
	32	0.44	80	0.55	80	0.77	80
	36	0.43	80	0.53	80	0.75	80

See footnotes 1-4.

Copyright © American Wood Council. Downloaded/printed pursuant to License Agreement. No reproduction or transfer authorized.

Table 3.16C3 Diaphragm Limits for Seismic — GSL = 70

(Dead Load Assumptions: Roof/ceiling = 15 psf, Floor = 12 psf, Partition = 8 psf, Wall = 110 plf; Ground Snow Load = 70 psf; Lateral force resisting system: Wood structural panel shear walls)

Diaphragm	Minimum Diaphragm Dimension, W (ft)	SDC A		SDC B		SDC C	
		Diaphragm Load Ratio[3] plf	Maximum Diaphragm Dimension, L[1,2,4] ft	Diaphragm Load Ratio[3] plf	Maximum Diaphragm Dimension, L[1,2,4] ft	Diaphragm Load Ratio[3] plf	Maximum Diaphragm Dimension, L[1,2,4] ft
Roof/Ceiling	12	0.11	36	0.22	36	0.33	36
	16	0.13	48	0.26	48	0.39	48
	20	0.15	60	0.29	60	0.45	60
	24	0.17	72	0.33	72	0.50	72
	28	0.18	80	0.35	80	0.54	80
	32	0.18	80	0.34	80	0.52	80
	36	0.17	80	0.34	80	0.51	80
Floor	12	0.07	36	0.14	36	0.22	36
	16	0.09	48	0.17	48	0.25	48
	20	0.10	60	0.19	60	0.29	60
	24	0.11	72	0.21	72	0.32	72
	28	0.12	80	0.23	80	0.34	80
	32	0.11	80	0.22	80	0.33	80
	36	0.11	80	0.21	80	0.32	80

Diaphragm	Minimum Diaphragm Dimension, W (ft)	SDC D_0		SDC D_1		SDC D_2	
		Diaphragm Load Ratio[3] plf	Maximum Diaphragm Dimension, L[1,2,4] ft	Diaphragm Load Ratio[3] plf	Maximum Diaphragm Dimension, L[1,2,4] ft	Diaphragm Load Ratio[3] plf	Maximum Diaphragm Dimension, L[1,2,4] ft
Roof/Ceiling	12	0.44	36	0.55	36	0.77	36
	16	0.52	48	0.64	48	0.90	48
	20	0.60	60	0.74	60	1.00	58
	24	0.68	72	0.84	72	1.00	61
	28	0.72	80	0.89	80	1.00	64
	32	0.70	80	0.87	80	1.00	66
	36	0.68	80	0.85	80	1.00	67
Floor	12	0.29	36	0.36	36	0.51	36
	16	0.34	48	0.42	48	0.59	48
	20	0.39	60	0.48	60	0.67	60
	24	0.43	72	0.54	72	0.76	72
	28	0.46	80	0.57	80	0.80	80
	32	0.44	80	0.55	80	0.77	80
	36	0.43	80	0.53	80	0.75	80

See footnotes 1-4.

Copyright © American Wood Council. Downloaded/printed pursuant to License Agreement. No reproduction or transfer authorized.
AMERICAN WOOD COUNCIL

Footnotes to Table 3.16C

1. Roof and floor diaphragm sheathing applied with long dimension perpendicular to framing members and staggered. Diaphragm length dimension measured perpendicular to direction of framing span.

2. Maximum diaphragm dimension, L, can be determined for buildings where the lateral force resisting system is other than wood structural panel shear walls, and for other load cases by use of the following equation. In no case shall L exceed the smaller of three times the minimum dimension, W, or 80 feet.

   Maximum diaphragm dimension, L = (Tabulated maximum diaphragm dimension)/(The greater of 1.0 or the Diaphragm load ratio in accordance with footnote 3)

3. The diaphragm load ratio can be determined for buildings where the lateral force resisting system is other than wood structural panel shear walls, and for other load cases by use of the following equation for calculation of diaphragm load ratio.

   Diaphragm load ratio = (Tabulated diaphragm load ratio) x (Number of stories factor) x (Lateral bracing system factor) x (Diaphragm shear adjustment factor)

   where,

   Number of stories factor = 1.00 for three-story above grade plane buildings
   = 0.92 for two-story above grade plane buildings
   = 0.83 for one-story above grade plane buildings

   Lateral bracing system factor = 1.0 for wood structural panel shear walls
   = 3.25 for other than wood structural panel shear walls

   Diaphragm shear adjustment factor:

Diaphragm	Minimum Building Dimension, W (ft.)	Roof/Ceiling Assembly = 15 psf				Roof/Ceiling Assembly = 25 psf			
		Floor = 12 psf Partition = 8 psf Wall = 180 plf	Floor = 20 psf Partition = 8 psf Wall = 180 plf	Floor = 12 psf Partition = 8 psf Wall = 110 plf	Floor = 20 psf Partition = 8 psf Wall = 110 plf	Floor = 12 psf Partition = 8 psf Wall = 180 plf	Floor = 20 psf Partition = 8 psf Wall = 180 plf	Floor = 12 psf Partition = 8 psf Wall = 110 plf	Floor = 20 psf Partition = 8 psf Wall = 110 plf
		Diaphragm shear adjustment factor							
Roof/Ceiling	12	1.22	1.22	1.00	1.00	1.60	1.60	1.40	1.40
	16	1.19	1.19	1.00	1.00	1.59	1.59	1.41	1.41
	20	1.17	1.17	1.00	1.00	1.58	1.58	1.43	1.43
	24	1.15	1.15	1.00	1.00	1.57	1.57	1.43	1.43
	28	1.13	1.13	1.00	1.00	1.57	1.57	1.44	1.44
	32	1.12	1.12	1.00	1.00	1.57	1.57	1.45	1.45
	36	1.11	1.11	1.00	1.00	1.56	1.56	1.46	1.46
Floor	12	1.37	1.54	1.00	1.19	1.37	1.54	1.00	1.19
	16	1.32	1.52	1.00	1.22	1.32	1.52	1.00	1.22
	20	1.29	1.51	1.00	1.24	1.29	1.51	1.00	1.24
	24	1.26	1.50	1.00	1.26	1.26	1.50	1.00	1.26
	28	1.24	1.49	1.00	1.27	1.24	1.49	1.00	1.27
	32	1.22	1.48	1.00	1.28	1.22	1.48	1.00	1.28
	36	1.20	1.47	1.00	1.29	1.20	1.47	1.00	1.29

4. Effective seismic weight used to determine diaphragm load includes 20% of ground snow load where the ground snow load exceeds 30 psf. S_{DS} used for SDC A, B, C, D_0, D_1 and D_2 are as follows: S_{DS}=0.17 for SDC A; S_{DS}=0.33 for SDC B; S_{DS}=0.50 for SDC C; S_{DS}=0.67 for SDC D_0; S_{DS}=0.83 for SDC D_1; S_{DS}=1.17 for SDC D_2.

Copyright © American Wood Council. Downloaded/printed pursuant to License Agreement. No reproduction or transfer authorized.
AMERICAN WOOD COUNCIL

Table 3.17A Segmented Shear Wall Sheathing Requirements for Wind — Exposure B

Wind Speed 3-second gust (mph) (See Figure 1.1)		90	95	100	105	110	115	120	130	140	150	160	170	180	195
Shear Wall Line Beneath	**Building Dimension, L or W (ft)**	**Minimum Length of Full Height Sheathing on Exterior Shear Walls Perpendicular to Building Dimension, L or W (ft)[1,2,3,4,5]**													
Roof & Ceiling 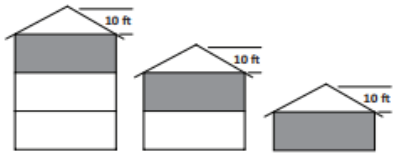	**12**	1.3	1.4	1.5	1.7	1.8	2.0	2.2	2.5	2.9	3.4	3.8	4.3	4.9	5.7
	16	1.8	1.8	2.0	2.2	2.4	2.6	2.9	3.4	3.9	4.5	5.1	5.8	6.5	7.6
	20	2.2	2.3	2.5	2.8	3.0	3.3	3.6	4.2	4.9	5.6	6.4	7.2	8.1	9.5
	24	2.6	2.7	3.0	3.3	3.6	4.0	4.3	5.1	5.9	6.8	7.7	8.7	9.7	11.4
	28	3.1	3.2	3.5	3.9	4.2	4.6	5.0	5.9	6.9	7.9	9.0	10.1	11.4	13.3
	32	3.5	3.6	4.0	4.4	4.8	5.3	5.8	6.8	7.8	9.0	10.3	11.6	13.0	15.2
	36	4.0	4.1	4.5	5.0	5.5	6.0	6.5	7.6	8.8	10.1	11.5	13.0	14.6	17.1
	40	4.4	4.5	5.0	5.5	6.1	6.6	7.2	8.5	9.8	11.3	12.8	14.5	16.2	19.0
	50	5.5	5.6	6.3	6.9	7.6	8.3	9.0	10.6	12.3	14.1	16.0	18.1	20.3	23.8
	60	6.6	6.8	7.5	8.3	9.1	9.9	10.8	12.7	14.7	16.9	19.2	21.7	24.3	28.6
	70	7.7	7.9	8.8	9.7	10.6	11.6	12.6	14.8	17.2	19.7	22.4	25.3	28.4	33.3
	80	8.8	9.0	10.0	11.0	12.1	13.2	14.4	16.9	19.6	22.5	25.6	28.9	32.4	38.1
Roof, Ceiling, & 1 Floor 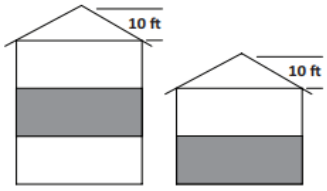	**20**	4.6	4.7	5.1	5.6	6.1	6.7	7.3	8.6	9.9	11.4	13.0	14.6	16.4	19.3
	24	5.6	5.6	6.1	6.7	7.4	8.0	8.8	10.3	11.9	13.7	15.6	17.6	19.7	23.1
	28	6.5	6.6	7.1	7.8	8.6	9.4	10.2	12.0	13.9	16.0	18.2	20.5	23.0	27.0
	32	7.4	7.5	8.1	8.9	9.8	10.7	11.7	13.7	15.9	18.2	20.7	23.4	26.3	30.8
	36	8.3	8.4	9.1	10.1	11.0	12.1	13.1	15.4	17.9	20.5	23.3	26.3	29.5	34.7
	40	9.3	9.4	10.1	11.2	12.3	13.4	14.6	17.1	19.9	22.8	25.9	29.3	32.8	38.5
	50	11.6	11.7	12.7	14.0	15.3	16.7	18.2	21.4	24.8	28.5	32.4	36.6	41.0	48.1
	60	13.9	14.1	15.2	16.8	18.4	20.1	21.9	25.7	29.8	34.2	38.9	43.9	49.2	57.8
	70	16.2	16.4	17.7	19.5	21.4	23.4	25.5	30.0	34.7	39.9	45.4	51.2	57.4	67.4
	80	18.5	18.8	20.3	22.3	24.5	26.8	29.2	34.2	39.7	45.6	51.9	58.5	65.6	77.0
Roof, Ceiling, & 2 Floors 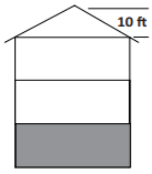	**28**	9.9	10.0	10.7	11.8	12.9	14.1	15.4	18.0	20.9	24.0	27.3	30.9	34.6	40.6
	32	11.3	11.4	12.2	13.5	14.8	16.1	17.6	20.6	23.9	27.5	31.2	35.3	39.5	46.4
	36	12.7	12.8	13.7	15.1	16.6	18.2	19.8	23.2	26.9	30.9	35.1	39.7	44.5	52.2
	40	14.1	14.2	15.3	16.8	18.5	20.2	22.0	25.8	29.9	34.3	39.0	44.1	49.4	58.0
	50	17.7	17.8	19.1	21.0	23.1	25.2	27.5	32.2	37.4	42.9	48.8	55.1	61.8	72.5
	60	21.2	21.4	22.9	25.2	27.7	30.3	32.9	38.7	44.8	51.5	58.6	66.1	74.1	87.0
	70	24.7	24.9	26.7	29.4	32.3	35.3	38.4	45.1	52.3	60.1	68.3	77.1	86.5	101.5
	80	28.3	28.5	30.5	33.6	36.9	40.3	43.9	51.6	59.8	68.6	78.1	88.2	98.8	116.0

See footnotes 1-5.

Copyright © American Wood Council. Downloaded/printed pursuant to License Agreement. No reproduction or transfer authorized.
AMERICAN WOOD COUNCIL

Table 3.17A Segmented Shear Wall Sheathing Requirements for Wind — Exposure C

Wind Speed 3-second gust (mph) (See Figure 1.1)		90	95	100	105	110	115	120	130	140	150	160	170	180	195
Shear Wall Line Beneath	**Building Dimension, L or W (ft)**	**Minimum Length of Full Height Sheathing on Exterior Shear Walls Perpendicular to Building Dimension, L or W (ft)[1,2,3,4,5]**													
Roof & Ceiling 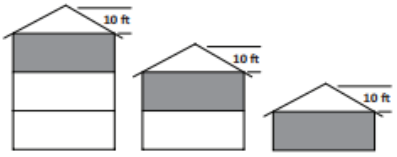	**12**	1.7	1.9	2.1	2.3	2.5	2.8	3.0	3.5	4.1	4.7	5.3	6.0	6.8	7.9
	16	2.3	2.5	2.8	3.1	3.4	3.7	4.0	4.7	5.5	6.3	7.1	8.0	9.0	10.6
	20	2.8	3.1	3.5	3.8	4.2	4.6	5.0	5.9	6.8	7.8	8.9	10.0	11.3	13.2
	24	3.4	3.8	4.2	4.6	5.0	5.5	6.0	7.1	8.2	9.4	10.7	12.1	13.5	15.9
	28	3.9	4.4	4.9	5.4	5.9	6.4	7.0	8.2	9.5	11.0	12.5	14.1	15.8	18.5
	32	4.5	5.0	5.6	6.1	6.7	7.4	8.0	9.4	10.9	12.5	14.2	16.1	18.0	21.2
	36	5.1	5.6	6.3	6.9	7.6	8.3	9.0	10.6	12.3	14.1	16.0	18.1	20.3	23.8
	40	5.6	6.3	7.0	7.7	8.4	9.2	10.0	11.8	13.6	15.6	17.8	20.1	22.5	26.4
	50	7.0	7.8	8.7	9.6	10.5	11.5	12.5	14.7	17.0	19.6	22.3	25.1	28.2	33.0
	60	8.4	9.4	10.4	11.5	12.6	13.8	15.0	17.6	20.4	23.5	26.7	30.1	33.8	39.7
	70	9.9	11.0	12.2	13.4	14.7	16.1	17.5	20.6	23.8	27.4	31.2	35.2	39.4	46.3
	80	11.3	12.6	13.9	15.3	16.8	18.4	20.0	23.5	27.3	31.3	35.6	40.2	45.1	52.9
Roof, Ceiling, & 1 Floor 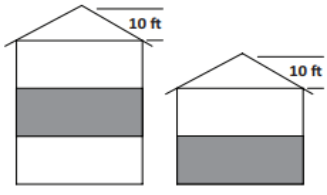	**20**	5.7	6.3	7.0	7.8	8.5	9.3	10.1	11.9	13.8	15.8	18.0	20.3	22.8	26.7
	24	6.8	7.6	8.4	9.3	10.2	11.2	12.2	14.3	16.5	19.0	21.6	24.4	27.3	32.1
	28	8.0	8.9	9.8	10.9	11.9	13.0	14.2	16.6	19.3	22.2	25.2	28.5	31.9	37.4
	32	9.1	10.2	11.3	12.4	13.6	14.9	16.2	19.0	22.1	25.3	28.8	32.5	36.5	42.8
	36	10.3	11.4	12.7	14.0	15.3	16.7	18.2	21.4	24.8	28.5	32.4	36.6	41.0	48.1
	40	11.4	12.7	14.1	15.5	17.0	18.6	20.3	23.8	27.6	31.7	36.0	40.7	45.6	53.5
	50	14.2	15.9	17.6	19.4	21.3	23.3	25.3	29.7	34.5	39.6	45.0	50.8	57.0	66.9
	60	17.1	19.0	21.1	23.3	25.5	27.9	30.4	35.7	41.4	47.5	54.0	61.0	68.4	80.2
	70	19.9	22.2	24.6	27.1	29.8	32.6	35.5	41.6	48.3	55.4	63.0	71.1	79.8	93.6
	80	22.8	25.4	28.1	31.0	34.0	37.2	40.5	47.6	55.1	63.3	72.0	81.3	91.2	107.0
Roof, Ceiling, & 2 Floors 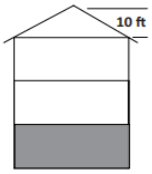	**28**	12.0	13.4	14.8	16.3	17.9	19.6	21.4	25.1	29.1	33.4	38.0	42.9	48.0	56.4
	32	13.7	15.3	16.9	18.7	20.5	22.4	24.4	28.6	33.2	38.1	43.4	49.0	54.9	64.4
	36	15.4	17.2	19.1	21.0	23.1	25.2	27.5	32.2	37.4	42.9	48.8	55.1	61.8	72.5
	40	17.2	19.1	21.2	23.4	25.6	28.0	30.5	35.8	41.5	47.7	54.2	61.2	68.6	80.5
	50	21.4	23.9	26.5	29.2	32.0	35.0	38.1	44.7	51.9	59.6	67.8	76.5	85.8	100.7
	60	25.7	28.7	31.8	35.0	38.4	42.0	45.8	53.7	62.3	71.5	81.3	91.8	102.9	120.8
	70	30.0	33.5	37.1	40.9	44.9	49.0	53.4	62.6	72.7	83.4	94.9	107.1	120.1	141.0
	80	34.3	38.2	42.4	46.7	51.3	56.0	61.0	71.6	83.0	95.3	108.5	122.4	137.3	161.1

See footnotes 1-5.

Copyright © American Wood Council. Downloaded/printed pursuant to License Agreement. No reproduction or transfer authorized.

Footnotes to Table 3.17A

1 Tabulated sheathing lengths assume studs are spaced a maximum of 16 inches o.c. or exterior wood structural panels are applied with the long dimension across the studs, walls are sheathed with 3/8 inch wood structural panels on the exterior attached with 8d common nails at 6 inches o.c. at panel edges and 12 inches o.c. in the field, and 1/2 inch gypsum wallboard on the interior attached with 5d cooler nails at 7 inches o.c. at panel edges and 10 inches o.c. as specified in section 3.4.4.2. For other sheathing materials or sheathing configurations the tabulated lengths shall be multiplied by the appropriate sheathing type adjustment factor in Table 3.17D.

2 Minimum length of full height sheathing shall not be less than the minimum required to satisfy the maximum shear wall segment aspect ratio limitation in Table 3.17D.

3 Total roof span shall not exceed 36 feet based on 3.1.3.4a. Building dimensions up to 80 feet are shown in the second column for use with the inscribed building provisions of 3.1.3.3c.

4 Tabulated sheathing lengths are based on 10 foot walls and 10 foot top plate-to-ridge height. For other configurations, the value may be multiplied by the adjustment factor below:

		Roof Only		Roof + 1 Floor		Roof + 2 Floors	
	Wall Height	**8'**	**10'**	**8'**	**10'**	**8'**	**10'**
Roof Pitch	**Top Plate to Ridge Height (ft)**	**Adjustment Factor**					
≤6:12	**0' (flat)**	0.35	0.43	0.58	0.72	0.66	0.81
	5'	0.50	0.59	0.66	0.79	0.71	0.86
	10'	0.65	0.74	0.74	0.87	0.76	0.91
>6:12	**5'**	0.63	0.71	0.72	0.86	0.75	0.90
	10'	0.92	1.00	0.87	1.00	0.85	1.00
	15'	1.21	1.29	1.01	1.14	0.95	1.10
	20'	1.49	1.58	1.15	1.29	1.04	NP

NP = not permitted

5 10d box nails or equivalent pneumatic nails with a nail diameter of at least 0.131 inch can be substituted for 8d common nails.

Copyright © American Wood Council. Downloaded/printed pursuant to License Agreement. No reproduction or transfer authorized.
AMERICAN WOOD COUNCIL

Table 3.17C1 Segmented Shear Wall Sheathing Requirements for Seismic

GSL = 30

(Dead Load Assumptions: Roof/ceiling = 15 psf, Floor = 12 psf, Partition = 8 psf, Wall = 110 plf; Ground Snow Load = 30 psf; Lateral force resisting system: Wood structural panel shear walls)

Shear Wall Line Beneath	Minimum Building Dimension, W (ft)	SDC A					SDC B					SDC C				
		L/W					L/W					L/W				
		1	1.5	2	2.5	3	1	1.5	2	2.5	3	1	1.5	2	2.5	3
		Full-height sheathing length, ft[1,2,3,4,5]														
Roof & Ceiling	12	0.4	0.5	0.6	0.7	0.9	0.7	0.9	1.2	1.4	1.7	1.0	1.4	1.8	2.1	2.5
	16	0.5	0.7	0.9	1.1	1.3	1.0	1.4	1.8	2.2	2.5	1.5	2.1	2.7	3.3	3.8
	20	0.7	1.0	1.3	1.6	1.8	1.4	1.9	2.5	3.0	3.6	2.1	2.9	3.8	4.6	5.4
	24	0.9	1.3	1.7	2.1	2.5	1.8	2.6	3.3	4.0	4.8	2.8	3.9	5.0	6.1	7.2
	28	1.2	1.7	2.2	2.7	3.0	2.3	3.3	4.2	5.2	5.8	3.5	5.0	6.4	7.8	8.9
	32	1.5	2.1	2.7	3.3[6]	-	2.9	4.1	5.3	6.5[6]	-	4.4	6.2	8.0	9.8[6]	-
	36	1.8	2.5	3.3	3.6[6]	-	3.5	4.9	6.4	7.1[6]	-	5.3	7.5	9.7	10.7[6]	-
Roof, Ceiling, & 1 Floor	12	0.7	1.0	1.2	1.5	1.7	1.4	1.9	2.4	2.9	3.4	2.1	2.9	3.6	4.4	5.1
	16	1.1	1.5	1.9	2.3	2.7	2.1	2.9	3.6	4.4	5.2	3.2	4.3	5.5	6.7	7.8
	20	1.5	2.1	2.6	3.2	3.7	2.9	4.0	5.1	6.2	7.3	4.4	6.1	7.7	9.4	11.0
	24	2.0	2.7	3.5	4.2	5.0	3.8	5.3	6.8	8.2	9.7	5.8	8.0	10.3	12.5	14.7
	28	2.5	3.5	4.5	5.5	6.2	4.8	6.8	8.7	10.6	12.0	7.3	10.2	13.1	16.1	18.1
	32	3.1	4.3	5.6	6.8[6]	-	6.0	8.4	10.8	13.2[6]	-	9.0	12.7	16.4	20.0[6]	-
	36	3.7	5.2	6.8	7.5[6]	-	7.2	10.2	13.2	14.5[6]	-	10.9	15.4	19.9	21.9[6]	-
Roof, Ceiling & 2 Floors	12	1.1	1.5	1.9	2.2	2.6	2.1	2.9	3.6	4.3	5.1	3.2	4.4	5.5	6.6	7.7
	16	1.6	2.2	2.8	3.4	4.0	3.2	4.3	5.5	6.6	7.8	4.8	6.6	8.3	10.1	11.8
	20	2.3	3.1	4.0	4.8	5.7	4.4	6.0	7.7	9.3	11.0	6.7	9.2	11.7	14.2	16.6
	24	3.0	4.1	5.3	6.4	7.6	5.8	8.0	10.2	12.5	14.7	8.8	12.1	15.5	18.9	22.3
	28	3.8	5.3	6.8	8.3	9.3	7.3	10.2	13.1	16.0	18.1	11.1	15.5	19.9	24.3	27.4
	32	4.7	6.5	8.4	10.3[6]	-	9.1	12.7	16.3	20.0[6]	-	13.7	19.2	24.8	30.3[6]	-
	36	5.6	7.9	10.2	11.3[6]	-	10.9	15.4	19.9	21.9[6]	-	16.6	23.4	30.1	33.2[6]	-

Shear Wall Line Beneath	Minimum Building Dimension, W (ft)	SDC D_0					SDC D_1					SDC D_2				
		L/W					L/W					L/W				
		1	1.5	2	2.5	3	1	1.5	2	2.5	3	1	1.5	2	2.5	3
		Full-height sheathing length, ft[1,2,3,4,5]														
Roof & Ceiling	12	1.4	1.9	2.4	2.9	3.4	1.7	2.3	3.0	3.6	4.2	2.4	3.3	4.2	5.0	5.9
	16	2.1	2.8	3.6	4.4	5.1	2.6	3.5	4.5	5.4	6.4	3.6	5.0	6.3	7.6	9.0
	20	2.9	3.9	5.0	6.1	7.2	3.5	4.9	6.2	7.6	9.0	5.0	6.9	8.8	10.7	12.6
	24	3.7	5.2	6.7	8.2	9.7	4.6	6.5	8.3	10.1	12.0	6.5	9.1	11.7	14.3	16.9
	28	4.7	6.7	8.6	10.5	11.9	5.9	8.3	10.6	13.0	14.7	8.3	11.6	15.0	18.3	20.7
	32	5.9	8.3	10.7	13.1[6]	-	7.3	10.2	13.2	16.2[6]	-	10.2	14.4	18.7	22.9[6]	-
	36	7.1	10.0	13.0	14.3[6]	-	8.8	12.4	16.1	17.7[6]	-	12.4	17.5	22.7	25.0[6]	-
Roof, Ceiling, & 1 Floor	12	2.9	3.9	4.9	5.9	6.8	3.6	4.8	6.0	7.3	8.5	5.0	6.8	8.5	10.2	12.0
	16	4.3	5.8	7.4	8.9	10.5	5.3	7.2	9.1	11.0	13.0	7.5	10.2	12.9	15.6	18.3
	20	5.9	8.1	10.3	12.6	14.8	7.3	10.1	12.8	15.5	18.3	10.3	14.2	18.0	21.9	25.8
	24	7.7	10.7	13.7	16.7	19.7	9.6	13.3	17.0	20.7	24.5	13.5	18.8	24.0	29.2	34.5
	28	9.8	13.7	17.6	21.5	24.3	12.2	17.0	21.8	26.6	30.1	17.1	23.9	30.8	37.6	42.4
	32	12.1	17.0	21.9	26.8[6]	-	15.0	21.1	27.2	33.2[6]	-	21.2	29.7	38.3	46.9[6]	-
	36	14.6	20.7	26.7	29.4[6]	-	18.1	25.6	33.1	36.4[6]	-	25.6	36.1	46.6	51.3[6]	-
Roof, Ceiling & 2 Floors	12	4.4	5.8	7.3	8.8	10.3	5.4	7.2	9.1	10.9	12.8	7.6	10.2	12.8	15.4	18.0
	16	6.5	8.8	11.1	13.5	15.8	8.0	10.9	13.8	16.7	19.6	11.3	15.4	19.4	23.5	27.6
	20	8.9	12.3	15.6	19.0	22.3	11.1	15.2	19.4	23.5	27.6	15.6	21.4	27.3	33.1	39.0
	24	11.7	16.3	20.8	25.3	29.8	14.5	20.1	25.8	31.4	37.0	20.5	28.4	36.3	44.2	52.1
	28	14.9	20.8	26.6	32.5	36.7	18.4	25.7	33.0	40.3	45.5	26.0	36.3	46.5	56.8	64.1
	32	18.4	25.8	33.2	40.6[6]	-	22.8	31.9	41.1	50.3[6]	-	32.1	45.0	57.9	70.9[6]	-
	36	22.2	31.3	40.4	44.4[6]	-	27.5	38.8	50.0	55.0[6]	-	38.8	54.7	70.5	77.6[6]	-

See footnotes 1-6.

Copyright © American Wood Council. Downloaded/printed pursuant to License Agreement. No reproduction or transfer authorized.

Table 3.17C2 Segmented Shear Wall Sheathing Requirements for Seismic

GSL = 50

(Dead Load Assumptions: Roof/ceiling = 15 psf, Floor = 12 psf, Partition = 8 psf, Wall = 110 plf; Ground Snow Load = 50 psf; Lateral force resisting system: Wood structural panel shear walls)

Shear Wall Line Beneath	Minimum Building Dimension, W (ft)	SDC A					SDC B					SDC C				
		L/W					L/W					L/W				
		1	1.5	2	2.5	3	1	1.5	2	2.5	3	1	1.5	2	2.5	3
		Full-height sheathing length, ft[1,2,3,4,5]														
Roof & Ceiling	12	0.5	0.6	0.8	1.0	1.1	0.9	1.2	1.6	1.9	2.2	1.4	1.9	2.4	2.9	3.4
	16	0.7	1.0	1.2	1.5	1.8	1.4	1.9	2.4	2.9	3.5	2.1	2.9	3.7	4.5	5.2
	20	1.0	1.4	1.8	2.2	2.5	1.9	2.7	3.4	4.2	4.9	2.9	4.0	5.2	6.3	7.5
	24	1.3	1.8	2.4	2.9	3.4	2.5	3.6	4.6	5.6	6.7	3.9	5.4	7.0	8.5	10.1
	28	1.7	2.4	3.1	3.8	4.2	3.3	4.6	5.9	7.3	8.2	4.9	7.0	9.0	11.0	12.5
	32	2.1	3.0	3.8	4.7[6]	-	4.0	5.7	7.4	9.2[6]	-	6.1	8.7	11.3	13.9[6]	-
	36	2.5	3.6	4.7	5.2[6]	-	4.9	7.0	9.1	10.1[6]	-	7.4	10.6	13.8	15.2[6]	-
Roof, Ceiling, & 1 Floor	12	0.8	1.1	1.4	1.7	2.0	1.6	2.2	2.8	3.4	3.9	2.5	3.4	4.2	5.1	6.0
	16	1.3	1.7	2.2	2.7	3.1	2.5	3.4	4.3	5.2	6.1	3.7	5.1	6.5	7.8	9.2
	20	1.8	2.4	3.1	3.8	4.5	3.4	4.7	6.0	7.3	8.6	5.2	7.2	9.1	11.1	13.1
	24	2.3	3.2	4.2	5.1	6.0	4.5	6.3	8.1	9.8	11.6	6.8	9.5	12.2	14.9	17.6
	28	3.0	4.2	5.4	6.5	7.4	5.7	8.1	10.4	12.7	14.4	8.7	12.2	15.7	19.3	21.8
	32	3.7	5.2	6.7	8.2[6]	-	7.1	10.1	13.0	15.9[6]	-	10.8	15.2	19.7	24.1[6]	-
	36	4.5	6.3	8.2	9.0[6]	-	8.6	12.3	15.9	17.5[6]	-	13.1	18.6	24.0	26.5[6]	-
Roof, Ceiling & 2 Floors	12	1.2	1.6	2.1	2.5	2.9	2.4	3.2	4.0	4.8	5.7	3.6	4.8	6.1	7.3	8.6
	16	1.8	2.5	3.2	3.8	4.5	3.5	4.8	6.1	7.4	8.7	5.4	7.3	9.3	11.2	13.2
	20	2.5	3.5	4.4	5.4	6.4	4.9	6.8	8.6	10.5	12.4	7.4	10.3	13.1	15.9	18.7
	24	3.3	4.6	5.9	7.2	8.5	6.5	9.0	11.5	14.1	16.6	9.8	13.7	17.5	21.3	25.1
	28	4.2	5.9	7.6	9.3	10.6	8.2	11.5	14.8	18.1	20.5	12.5	17.5	22.5	27.5	31.0
	32	5.3	7.4	9.5	11.7[6]	-	10.2	14.4	18.5	22.7[6]	-	15.5	21.8	28.1	24.4[6]	-
	36	6.4	9.0	11.6	12.8[6]	-	12.4	17.5	22.6	24.9[6]	-	18.7	26.5	34.3	37.7[6]	-

Shear Wall Line Beneath	Minimum Building Dimension, W (ft)	SDC D_0					SDC D_1					SDC D_2				
		L/W					L/W					L/W				
		1	1.5	2	2.5	3	1	1.5	2	2.5	3	1	1.5	2	2.5	3
		Full-height sheathing length, ft[1,2,3,4,5]														
Roof & Ceiling	12	1.9	2.5	3.2	3.9	4.5	2.3	3.1	4.0	4.8	5.6	3.3	4.4	5.6	6.7	7.9
	16	2.8	3.9	4.9	6.0	7.0	3.5	4.8	6.1	7.4	8.7	4.9	6.7	8.6	10.4	12.3
	20	3.9	5.4	7.0	8.5	10.0	4.8	6.7	8.6	10.5	12.4	6.8	9.5	12.1	14.8	17.5
	24	5.2	7.3	9.3	11.4	13.5	6.4	9.0	11.6	14.2	16.7	9.0	12.7	16.3	20.0	23.6
	28	6.6	9.3	12.1	14.8	16.7	8.2	11.6	14.9	18.3	20.7	11.5	16.3	21.1	25.8	29.2
	32	8.2	11.7	15.1	18.6[6]	-	10.2	14.4	18.7	23.0[6]	-	14.3	20.4	26.4	32.4[6]	-
	36	10.0	14.2	18.5	20.4[6]	-	12.4	17.6	22.9	25.3[6]	-	17.4	24.9	32.3	35.6[6]	-
Roof, Ceiling, & 1 Floor	12	3.3	4.5	5.7	6.8	8.0	4.1	5.6	7.0	8.5	9.9	5.8	7.9	9.9	11.9	14.0
	16	5.0	6.8	8.7	10.5	12.4	6.2	8.5	10.7	13.0	15.3	8.7	11.9	15.1	18.4	21.6
	20	6.9	9.6	12.2	14.9	17.6	8.6	11.9	15.2	18.5	21.7	12.1	16.7	21.4	26.0	30.7
	24	9.2	12.8	16.4	20.0	23.6	11.4	15.8	20.3	24.8	29.2	16.0	22.3	28.6	34.9	41.2
	28	11.7	16.4	21.1	25.8	29.2	14.5	20.3	26.1	32.0	36.1	20.4	28.6	36.8	45.1	50.9
	32	14.5	20.4	26.4	32.3[6]	-	17.9	25.3	32.7	40.0[6]	-	25.3	35.7	46.0	56.4[6]	-
	36	17.5	24.9	32.2	35.5[6]	-	21.7	30.8	39.9	43.9[6]	-	30.6	43.4	56.2	61.9[6]	-
Roof, Ceiling & 2 Floors	12	4.8	6.5	8.1	9.8	11.5	6.0	8.0	10.1	12.2	14.2	8.4	11.3	14.2	17.1	20.1
	16	7.2	9.8	12.4	15.1	17.7	8.9	12.2	15.4	18.7	21.9	12.6	17.1	21.7	26.3	30.9
	20	10.0	13.8	17.5	21.3	25.1	12.4	17.0	21.7	26.4	31.1	17.4	24.0	30.6	37.2	43.8
	24	13.2	18.3	23.4	28.6	33.7	16.3	22.7	29.0	35.4	41.7	23.0	31.9	40.9	49.9	58.8
	28	16.7	23.4	30.1	36.8	41.6	20.7	29.0	37.3	45.6	51.5	29.2	40.9	52.6	64.3	72.6
	32	20.7	29.2	37.6	46.1[6]	-	25.7	36.1	46.6	57.1[6]	-	36.2	50.9	65.7	80.4[6]	-
	36	25.1	35.5	45.9	50.5[6]	-	31.1	44.0	56.9	62.6[6]	-	43.8	62.0	80.2	88.2[6]	-

See footnotes 1-6.

Copyright © American Wood Council. Downloaded/printed pursuant to License Agreement. No reproduction or transfer authorized.

Table 3.17C3 Segmented Shear Wall Sheathing Requirements for Seismic

GSL = 70

(Dead Load Assumptions: Roof/ceiling = 15 psf, Floor = 12 psf, Partition = 8 psf, Wall = 110 plf; Ground Snow Load = 70 psf; Lateral force resisting system: Wood structural panel shear walls)

Shear Wall Line Beneath	Minimum Building Dimension, W (ft)	SDC A					SDC B					SDC C				
		L/W					L/W					L/W				
		1	1.5	2	2.5	3	1	1.5	2	2.5	3	1	1.5	2	2.5	3
		Full-height sheathing length, ft[1,2,3,4,5]														
Roof & Ceiling 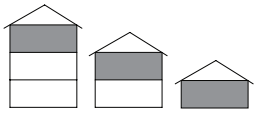	12	0.5	0.7	0.9	1.1	1.3	1.0	1.4	1.7	2.1	2.5	1.5	2.1	2.6	3.2	3.7
	16	0.8	1.1	1.4	1.7	2.0	1.5	2.1	2.7	3.3	3.8	2.3	3.2	4.1	4.9	5.8
	20	1.1	1.5	2.0	2.4	2.8	2.1	3.0	3.8	4.6	5.5	3.2	4.5	5.8	7.0	8.3
	24	1.5	2.0	2.6	3.2	3.8	2.8	4.0	5.1	6.3	7.4	4.3	6.0	7.8	9.5	11.2
	28	1.9	2.6	3.4	4.2	4.7	3.6	5.1	6.6	8.1	9.2	5.5	7.8	10.0	12.3	13.9
	32	2.3	3.3	4.3	5.3[6]	-	4.5	6.4	8.3	10.2[6]	-	6.8	9.7	12.6	15.5[6]	-
	36	2.8	4.0	5.3	5.8[6]	-	5.5	7.8	10.2	11.3[6]	-	8.3	11.9	15.5	17.0[6]	-
Roof, Ceiling, & 1 Floor 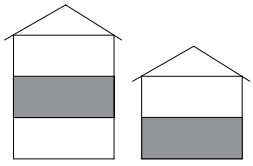	12	0.9	1.2	1.5	1.8	2.1	1.7	2.3	3.0	3.6	4.2	2.6	3.6	4.5	5.4	6.3
	16	1.3	1.8	2.3	2.8	3.3	2.6	3.6	4.5	5.5	6.5	3.9	5.4	6.9	8.3	9.8
	20	1.9	2.6	3.3	4.0	4.7	3.6	5.0	6.4	7.8	9.2	5.5	7.6	9.7	11.8	13.9
	24	2.5	3.4	4.4	5.4	6.4	4.8	6.7	8.6	10.5	12.4	7.3	10.1	13.0	15.9	18.8
	28	3.1	4.4	5.7	7.0	7.9	6.1	8.6	11.1	13.6	15.3	9.3	13.0	16.8	20.5	23.2
	32	3.9	5.5	7.1	8.8[6]	-	7.6	10.7	13.9	17.0[6]	-	11.5	16.2	21.0	25.8[6]	-
	36	4.7	6.7	8.7	9.6[6]	-	9.2	13.1	16.9	18.7[6]	-	14.0	19.8	25.7	28.3[6]	-
Roof, Ceiling & 2 Floors 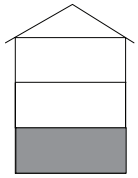	12	1.3	1.7	2.2	2.6	3.0	2.5	3.3	4.2	5.0	5.9	3.7	5.0	6.3	7.6	8.9
	16	1.9	2.6	3.3	4.0	4.7	3.7	5.0	6.4	7.7	9.1	5.6	7.6	9.7	11.7	13.8
	20	2.6	3.6	4.6	5.6	6.6	5.1	7.1	9.0	11.0	12.9	7.8	10.7	13.7	16.6	19.6
	24	3.5	4.8	6.2	7.6	8.9	6.8	9.4	12.1	14.7	17.4	10.2	14.3	18.3	22.3	26.3
	28	4.4	6.2	8.0	9.8	11.0	8.6	12.1	15.5	19.0	21.4	13.0	18.3	23.5	28.7	32.5
	32	5.5	7.7	10.0	12.2[6]	-	10.7	15.0	19.4	23.8[6]	-	16.2	22.8	29.4	36.0[6]	-
	36	6.7	9.4	12.2	13.4[6]	-	12.9	18.3	23.7	26.1[6]	-	19.6	27.8	35.9	39.5[6]	-

Shear Wall Line Beneath	Minimum Building Dimension, W (ft)	SDC D_0					SDC D_1					SDC D_2				
		L/W					L/W					L/W				
		1	1.5	2	2.5	3	1	1.5	2	2.5	3	1	1.5	2	2.5	3
		Full-height sheathing length, ft[1,2,3,4,5]														
Roof & Ceiling 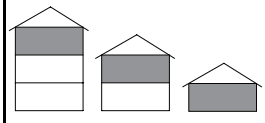	12	2.0	2.8	3.5	4.3	5.0	2.5	3.4	4.4	5.3	6.2	3.6	4.9	6.1	7.4	8.7
	16	3.1	4.3	5.4	6.6	7.8	3.8	5.3	6.7	8.2	9.6	5.4	7.4	9.5	11.5	13.6
	20	4.3	6.0	7.7	9.4	11.1	5.3	7.5	9.6	11.7	13.8	7.5	10.5	13.5	16.5	19.4
	24	5.7	8.1	10.4	12.7	15.1	7.1	10.0	12.9	15.8	18.7	10.0	14.1	18.2	22.2	26.3
	28	7.3	10.4	13.5	16.5	18.7	9.1	12.9	16.7	20.5	23.2	12.8	18.2	23.5	28.8	32.6
	32	9.1	13.0	16.9	20.8[6]	-	11.3	16.1	20.9	25.7[6]	-	16.0	22.7	29.5	36.3[6]	-
	36	11.1	15.9	20.7	22.8[6]	-	13.8	19.7	25.7	28.3[6]	-	19.4	27.8	36.2	39.9[6]	-
Roof, Ceiling, & 1 Floor 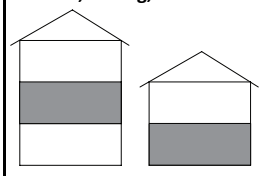	12	3.5	4.8	6.0	7.2	8.5	4.4	5.9	7.4	9.0	10.5	6.2	8.3	10.5	12.6	14.8
	16	5.3	7.2	9.2	11.2	13.1	6.5	9.0	11.4	13.8	16.2	9.2	12.6	16.1	19.5	22.9
	20	7.4	10.2	13.0	15.8	18.7	9.1	12.6	16.1	19.6	23.1	12.8	17.8	22.7	27.7	32.6
	24	9.7	13.6	17.4	21.3	25.1	12.1	16.8	21.6	26.4	31.2	17.0	23.7	30.5	37.2	43.9
	28	12.4	17.4	22.5	27.5	31.1	15.4	21.6	27.9	34.1	38.5	21.7	30.5	39.3	48.0	54.3
	32	15.4	21.8	28.1	34.5[6]	-	19.1	27.0	34.9	42.7[6]	-	26.9	38.0	49.1	60.3[6]	-
	36	18.7	26.6	34.4	37.9[6]	-	23.2	32.9	42.6	47.0[6]	-	32.7	46.4	60.1	66.2[6]	-
Roof, Ceiling & 2 Floors 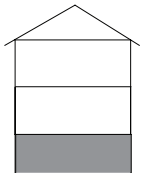	12	5.0	6.7	8.5	10.2	11.9	6.2	8.3	10.5	12.6	14.8	8.7	11.8	14.8	17.8	20.9
	16	7.5	10.2	13.0	15.7	18.4	9.3	12.7	16.1	19.5	22.8	13.1	17.9	22.6	27.4	32.2
	20	10.4	14.3	18.3	22.3	26.2	12.9	17.8	22.7	27.6	32.5	18.2	25.1	32.0	38.9	45.8
	24	13.7	19.1	24.5	29.9	35.2	17.0	23.7	30.3	37.0	43.6	24.0	33.4	42.8	52.1	61.5
	28	17.5	24.5	31.5	38.5	43.5	21.7	30.3	39.0	47.7	53.9	30.5	42.8	55.0	67.3	76.0
	32	21.7	30.5	39.4	48.2[6]	-	26.8	37.8	48.8	59.8[6]	-	37.8	53.3	68.8	84.2[6]	-
	36	26.3	37.2	48.1	53.0[6]	-	32.5	46.1	59.6	65.6[6]	-	45.9	64.9	84.0	92.5[6]	-

See footnotes 1-6.

Copyright © American Wood Council. Downloaded/printed pursuant to License Agreement. No reproduction or transfer authorized.

Footnotes to Table 3.17C

[1] The tabulated full-height sheathing length is applicable for each wall of a rectangular building.
[2] Tabulated full-height sheathing lengths can be multipiled by 0.83 for one-story above grade plane buildings and 0.92 for two story above grade plane buildings.
[3] Tabulated full-height sheathing lengths assume walls are sheathed as specified in Section 3.4.4.2. For other sheathing materials the tabulated full-height sheathing length shall be multiplied by the appropriate sheathing type adjustment factor in Table 3.17D. The minimum length of full-height sheathing shall not be less than the minimum required to satisfy the maximum shear wall segment aspect ratio limitation in Table 3.17D.
[4] Full-height sheathing lengths can be determined for other dead load cases by multiplying by the full-height sheathing length adjustment factor given in the following table:

Shear Wall Line Beneath	Minimum Building Dimension, W (ft.)	Roof/Ceiling Assembly = 15 psf				Roof/Ceiling Assembly = 25 psf			
		Floor = 12 psf Partition = 8 psf Wall = 180 plf	Floor = 20 psf Partition = 8 psf Wall = 180 plf	Floor = 12 psf Partition = 8 psf Wall = 110 plf	Floor = 20 psf Partition = 8 psf Wall = 110 plf	Floor = 12 psf Partition = 8 psf Wall = 180 plf	Floor = 20 psf Partition = 8 psf Wall = 180 plf	Floor = 12 psf Partition = 8 psf Wall = 110 plf	Floor = 20 psf Partition = 8 psf Wall = 110 plf
		Full-height sheathing length adjustment factors							
Roof & Ceiling	12	1.27	1.27	1.00	1.00	1.60	1.60	1.34	1.34
	16	1.25	1.25	1.00	1.00	1.60	1.60	1.37	1.37
	20	1.22	1.22	1.00	1.00	1.59	1.59	1.38	1.38
	24	1.20	1.20	1.00	1.00	1.58	1.58	1.40	1.40
	28	1.19	1.19	1.00	1.00	1.58	1.58	1.41	1.41
	32	1.17	1.17	1.00	1.00	1.57	1.57	1.42	1.42
	36	1.16	1.16	1.00	1.00	1.57	1.57	1.42	1.42
Roof, Ceiling, & 1 Floor	12	1.34	1.42	1.00	1.09	1.51	1.58	1.17	1.26
	16	1.31	1.40	1.00	1.11	1.48	1.57	1.18	1.29
	20	1.28	1.38	1.00	1.12	1.46	1.56	1.19	1.31
	24	1.26	1.36	1.00	1.13	1.44	1.55	1.20	1.32
	28	1.24	1.35	1.00	1.13	1.42	1.54	1.20	1.33
	32	1.22	1.34	1.00	1.14	1.41	1.53	1.20	1.34
	36	1.20	1.33	1.00	1.14	1.40	1.53	1.21	1.35
Roof, Ceiling, & 2 Floors	12	1.37	1.46	1.00	1.12	1.47	1.57	1.11	1.23
	16	1.33	1.44	1.00	1.14	1.44	1.56	1.12	1.26
	20	1.30	1.43	1.00	1.16	1.41	1.54	1.12	1.28
	24	1.27	1.41	1.00	1.17	1.39	1.54	1.13	1.30
	28	1.25	1.40	1.00	1.18	1.37	1.53	1.13	1.31
	32	1.23	1.39	1.00	1.18	1.36	1.52	1.14	1.32
	36	1.22	1.38	1.00	1.19	1.35	1.52	1.14	1.32

[5] Effective seismic weight used to determine tabulated full-height sheathing lengths include 20% of ground snow load where the ground snow load exceeds 30 psf. S_{DS} used for SDC A, B, C, D_0, D_1 and D_2 are as follows: S_{DS}=0.17 for SDC A; S_{DS}=0.33 for SDC B; S_{DS}=0.50 for SDC C; S_{DS}=0.67 for SDC D_0; S_{DS}=0.83 for SDC D_1; S_{DS}=1.17 for SDC D_2.
[6] Tabulated full-height sheathing lengths are based on building length, L, equal to 80 ft.

Copyright © American Wood Council. Downloaded/printed pursuant to License Agreement. No reproduction or transfer authorized.
AMERICAN WOOD COUNCIL

Table 3.17D Shear Wall Assembly Allowable Unit Shear Capacities, Maximum Shear Wall Segment Aspect Ratios, and Sheathing Type Adjustments

Exterior Wall Sheathing / Interior Wall Sheathing	Nails and Spacing Requirements	ASD Unit Shear Capacity of Wall Assembly (plf)		Maximum Shear Wall Segment Aspect Ratio		Sheathing Type Adjustment Factor	
		Wind	Seismic	Wind	Seismic	Wind	Seismic
No Sheathing or Non-Rated Sheathing							
1/2" Gypsum Wallboard (Unblocked)[2], maximum stud spacing 16" on center	5d cooler nails - 7" edge spacing	100	100[1]	1.5:1	1.5:1	4.36	7.77
1/2" Gypsum Wallboard (Unblocked)[2], maximum stud spacing 24" on center	5d cooler nails - 7" edge spacing	75	75[1]	1.5:1	1.5:1	5.81	10.36
1/2" Structural Fiberboard Sheathing (Blocked), maximum stud spacing 16" on center	11 ga. galv. roofing nails - 3" edge spacing						
No Sheathing or Non-Rated Sheathing		297	212[3]	1:1[4]	1:1[4]	1.47	3.66
1/2" Gypsum Wallboard (Unblocked)[2]	5d cooler nails - 7" edge spacing	397	212[3]	1:1[4]	1:1[4]	1.10	3.66
25/32" Structural Fiberboard Sheathing (Blocked), maximum stud spacing 16" on center	11 ga. galv. roofing nails - 3" edge spacing						
No Sheathing or Non-Rated Sheathing		297	212[3]	1:1[4]	1:1[4]	1.47	3.66
1/2" Gypsum Wallboard (Unblocked)[2]	5d cooler nails - 7" edge spacing	397	212[3]	1:1[4]	1:1[4]	1.10	3.66
7/16" Wood Structural Panels (Blocked), maximum stud spacing 24" on center	8d common nails - 6" edge spacing						
No Sheathing or Non-Rated Sheathing		308	221	2:1[4]	2:1[4]	1.42	1.08
1/2" Gypsum Wallboard (Unblocked)[2]	5d cooler nails - 7" edge spacing	383	221	2:1[4]	2:1[4]	1.14	1.08
7/16" Wood Structural Panels (Blocked)	8d common nails - 6" edge spacing	616	442	2:1[4]	2:1[4]	0.71	0.54
15/32" Wood Structural Panels (Blocked), maximum stud spacing 24" on center	8d common nails - 6" edge spacing						
No Sheathing or Non-Rated Sheathing		336	239	2:1[4]	2:1[4]	1.30	1.00
1/2" Gypsum Wallboard (Unblocked)[2]	5d cooler nails - 7" edge spacing	411	239	2:1[4]	2:1[4]	1.06	1.00
15/32" Wood Structural Panels (Blocked)	8d common nails - 6" edge spacing	672	478	2:1[4]	2:1[4]	0.65	0.50
3/8", 7/16", and 15/32" Wood Structural Panels (Blocked), maximum stud spacing 16" on center	8d common nails - 6" edge spacing						
No Sheathing or Non-Rated Sheathing		336	239	2:1[4]	2:1[4]	1.30	1.00
1/2" Gypsum Wallboard (Unblocked)[2]	5d cooler nails - 7" edge spacing	436	239	2:1[4]	2:1[4]	1.00	1.00
3/8", 7/16", and 15/32" Wood Structural Panels (Blocked)	8d common nails - 6" edge spacing	672	478	2:1[4]	2:1[4]	0.65	0.50

See footnotes 1-4.

Copyright © American Wood Council. Downloaded/printed pursuant to License Agreement. No reproduction or transfer authorized.

Table 3.17D Shear Wall Assembly Allowable Unit Shear Capacities, Maximum Shear Wall Segment Aspect Ratios, and Sheathing Type Adjustments (Cont.)

Exterior Wall Sheathing / Interior Wall Sheathing	Nails and Spacing Requirements	ASD Unit Shear Capacity of Wall Assembly (plf)		Maximum Shear Wall Segment Aspect Ratio		Sheathing Type Adjustment Factor	
		Wind	Seismic	Wind	Seismic	Wind	Seismic
15/32" Wood Structural Panels (Blocked), maximum stud spacing 24" on center	**10d common nails - 6" edge spacing**						
No Sheathing or Non-Rated Sheathing		400	285	2:1[4]	2:1[4]	1.09	0.84
1/2" Gypsum Wallboard (Unblocked)[2]	5d cooler nails - 7" edge spacing	475	285	2:1[4]	2:1[4]	0.92	0.84
15/32" or Thicker Wood Structural Panels (Blocked)	10d common nails- 6" edge spacing	800	570	2:1[4]	2:1[4]	0.55	0.42
7/16" Wood Structural Panels (Blocked), maximum stud spacing 24" on center	**8d common nails - 4" edge spacing**						
No Sheathing or Non-Rated Sheathing		451	322	2:1[4]	2:1[4]	0.97	0.74
1/2" Gypsum Wallboard (Unblocked)[2]	5d cooler nails - 7" edge spacing	526	322	2:1[4]	2:1[4]	0.83	0.74
7/16" Wood Structural Panels (Blocked)	8d common nails - 4" edge spacing	902	644	2:1[4]	2:1[4]	0.48	0.37
15/32" Wood Structural Panels (Blocked), maximum stud spacing 24" on center	**8d common nails - 4" edge spacing**						
No Sheathing or Non-Rated Sheathing		490	350	2:1[4]	2:1[4]	0.89	0.68
1/2" Gypsum Wallboard (Unblocked)[2]	5d cooler nails - 7" edge spacing	565	350	2:1[4]	2:1[4]	0.77	0.68
7/16" Wood Structural Panels (Blocked)	8d common nails - 4" edge spacing	980	700	2:1[4]	2:1[4]	0.44	0.34
3/8", 7/16", and 15/32" Wood Structural Panels (Blocked), maximum stud spacing 16" on center	**8d common nails - 4" edge spacing**						
No Sheathing or Non-Rated Sheathing		490	350	2:1[4]	2:1[4]	0.89	0.68
1/2" Gypsum Wallboard (Unblocked)[2]	5d cooler nails - 7" edge spacing	590	350	2:1[4]	2:1[4]	0.74	0.68
3/8", 7/16", and 15/32" Wood Structural Panels (Blocked)	8d common nails - 4" edge spacing	980	700	2:1[4]	2:1[4]	0.44	0.34
15/32" Wood Structural Panels (Blocked), maximum stud spacing 24" on center	**10d common nails - 4" Edge spacing**						
No Sheathing or Non-Rated Sheathing		593	423	2:1[4]	2:1[4]	0.74	0.57
1/2" Gypsum Wallboard (Unblocked)[2]	5d cooler nails - 7" edge spacing	668	423	2:1[4]	2:1[4]	0.65	0.57
15/32" Wood Structural Panels (Blocked)	10d common nails- 4" edge spacing	1186	846	2:1[4]	2:1[4]	0.37	0.28

See footnotes 1-4.

Copyright © American Wood Council. Downloaded/printed pursuant to License Agreement. No reproduction or transfer authorized.

Table 3.17D Shear Wall Assembly Allowable Unit Shear Capacities, Maximum Shear Wall Segment Aspect Ratios, and Sheathing Type Adjustments (Cont.)

Exterior Wall Sheathing / Interior Wall Sheathing	Nails and Spacing Requirements	ASD Unit Shear Capacity of Wall Assembly (plf)		Maximum Shear Wall Segment Aspect Ratio		Sheathing Type Adjustment Factor	
		Wind	Seismic	Wind	Seismic	Wind	Seismic
7/16" Wood Structural Panels (Blocked), maximum stud spacing 24" on center	**8d common nails - 3" Edge spacing**						
No Sheathing or Non-Rated Sheathing		580	414	2:1[4]	2:1[4]	0.75	0.58
1/2" Gypsum Wallboard (Unblocked)[2]	5d cooler nails - 7" edge spacing	655	414	2:1[4]	2:1[4]	0.67	0.58
7/16" or Thicker Wood Structural Panels (Blocked)	8d common nails - 3" Edge spacing	1160	828	2:1[4]	2:1[4]	0.38	0.29
15/32" Wood Structural Panels (Blocked), maximum stud spacing 24" on center	**8d common nails - 3" Edge spacing**						
No Sheathing or Non-Rated Sheathing		630	451	2:1[4]	2:1[4]	0.69	0.53
1/2" Gypsum Wallboard (Unblocked)[2]	5d cooler nails - 7" edge spacing	705	451	2:1[4]	2:1[4]	0.62	0.53
7/16" or Thicker Wood Structural Panels (Blocked)	8d common nails - 3" Edge spacing	1260	902	2:1[4]	2:1[4]	0.35	0.26
3/8", 7/16", and 15/32" Wood Structural Panels (Blocked), maximum stud spacing 16" on center	**8d common nails - 3" edge spacing**						
No Sheathing or Non-Rated Sheathing		630	451	2:1[4]	2:1[4]	0.69	0.53
1/2" Gypsum Wallboard (Unblocked)[2]	5d cooler nails - 7" edge spacing	730	451	2:1[4]	2:1[4]	0.60	0.53
3/8", 7/16", and 15/32" Wood Structural Panels (Blocked)	8d common nails - 3" edge spacing	1260	902	2:1[4]	2:1[4]	0.35	0.26
3/8" Wood Structural Panels (Unblocked), maximum stud spacing 16" on center	**8d common nails - 6" Edge spacing**						
No Sheathing or Non-Rated Sheathing		170	121	2:1	2:1	2.56	1.98
1/2" Gypsum Wallboard (Unblocked)[2]	5d cooler nails - 7" edge spacing	270	121	2:1	2:1	1.61	1.98
3/8" Wood Structural Panels (Unblocked)	8d common nails - 6" Edge spacing	340	242	2:1	2:1	1.28	0.99

See footnotes 1-4.

Copyright © American Wood Council. Downloaded/printed pursuant to License Agreement. No reproduction or transfer authorized.
AMERICAN WOOD COUNCIL

Table 3.17D Shear Wall Assembly Allowable Unit Shear Capacities, Maximum Shear Wall Segment Aspect Ratios, and Sheathing Type Adjustments (Cont.)

Exterior Wall Sheathing / Interior Wall Sheathing	Nails and Spacing Requirements	ASD Unit Shear Capacity of Wall Assembly (plf)		Maximum Shear Wall Segment Aspect Ratio		Sheathing Type Adjustment Factor	
		Wind	Seismic	Wind	Seismic	Wind	Seismic
7/16" Wood Structural Panels (Unblocked), maximum stud spacing 16" on center	**8d common nails - 6" edge spacing**						
No Sheathing or Non-Rated Sheathing		185	132	2:1	2:1	2.36	1.81
1/2" Gypsum Wallboard (Unblocked)[2]	**5d cooler nails - 7" edge spacing**	285	132	2:1	2:1	1.53	1.81
7/16" Wood Structural Panels (Unblocked)	**8d common nails - 6" edge spacing**	370	264	2:1	2:1	1.18	0.91
15/32" Wood Structural Panels (Unblocked), maximum stud spacing 16" on center	**10d common nails- 6" edge spacing**						
No Sheathing or Non-Rated Sheathing		240	171	2:1	2:1	1.82	1.40
1/2" Gypsum Wallboard (Unblocked)[2]	**5d cooler nails - 7" edge spacing**	340	171	2:1	2:1	1.28	1.40
15/32" Wood Structural Panels (Unblocked)	**10d common nails- 6" edge spacing**	480	342	2:1	2:1	0.91	0.70

1 Shear capacities shown are for short term loading due to wind or seismic loading in Seismic Design Categories A, B, C, D_0, D_1, and D_2.

2 Gypsum wallboard walls having aspect ratios exceeding 1.5:1 shall be blocked. Where shear walls are gypsum wallboard only, the maximum aspect ratio shall not exceed 2:1 in accordance with *AWC/ANSI Special Design Provisions for Wind and Seismic (SDPWS)* Table 4.3.4.

3 Shear capacities shown are for short term loading due to wind or seismic loading in Seismic Design Categories A, B, or C. Values shall not be permitted in Seismic Design Category D_0, D_1 or D_2.

4 The aspect ratio is permitted to be increased to a maximum value of 3.5:1 provided the unit shear capacity and sheathing type adjustment factor are adjusted in accordance with SDPWS Section 4.3.3.4.1 Exception 1 for wood structural panel shear walls or Exception 2 for structural fiberboard shear walls.

Copyright © American Wood Council. Downloaded/printed pursuant to License Agreement. No reproduction or transfer authorized.
AMERICAN WOOD COUNCIL

Table 3.17E Perforated Shear Wall Full Height Sheathing Adjustments

	Maximum Unrestrained Opening Height (ft - in.)				
	Window Height			Door Height	
	H/3	H/2	2H/3	5H/6	H
8' Wall	2 - 8	4 - 0	5 - 4	6 - 8	8 - 0
9' Wall	3 - 0	4 - 6	6 - 0	7 - 6	9 - 0
10' Wall	3 - 4	5 - 0	6 - 8	8 - 4	10 - 0
Percent Full-Height Sheathing on Segmented Shear Wall	**Perforated Shear Wall Length Adjustment Factor[1,2,3]**				
10%	1.00	1.43	1.82	2.17	2.50
20%	1.00	1.36	1.67	1.92	2.14
30%	1.00	1.30	1.54	1.72	1.88
40%	1.00	1.25	1.43	1.56	1.67
50%	1.00	1.20	1.33	1.43	1.50
60%	1.00	1.15	1.25	1.32	1.36
70%	1.00	1.11	1.18	1.22	1.25
80%	1.00	1.07	1.11	1.14	1.15
90%	1.00	1.03	1.05	1.06	1.07
100%	1.00	1.00	1.00	1.00	1.00

1 Full-height sheathing requirements in Tables 3.17A, or 3.17C shall be multiplied by the tabulated Perforated Shear Wall length increase factors to determine the required sheathing lengths for Perforated Shear Walls.
2 Shear Walls shall be blocked.
3 Interpolation of tabulated values is permitted.

Copyright © American Wood Council. Downloaded/printed pursuant to License Agreement. No reproduction or transfer authorized.

Table 3.17F Segmented and Perforated Shear Wall Hold-down Capacity Requirements

	Required Hold-down Connection Capacity (lbs)[1,2]	
Wall Height (ft)	**Wind**	**Seismic**
8	3488	1912
9	3924	2151
10	4360	2390
12	5232	2868
14	6104	3346
16	6976	3824
18	7848	4302
20	8720	4780

1 Required hold-down capacities assume walls are sheathed in accordance with Section 3.4.4.2. For other wall sheathing types the tabulated hold-down capacity shall be divided by the appropriate sheathing type adjustment factor in Table 3.17D.

2 Hold-down capacities are tabulated per story. Required hold-down capacities shall be summed from the story above to the story below.

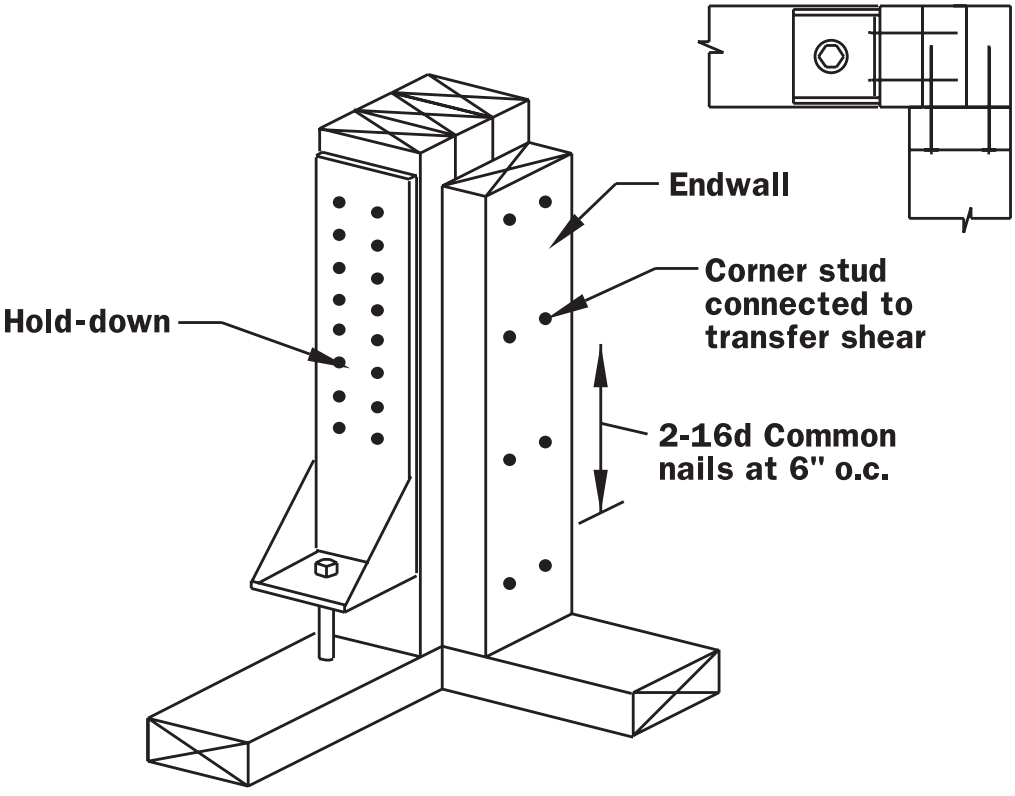

Copyright © American Wood Council. Downloaded/printed pursuant to License Agreement. No reproduction or transfer authorized.

Table 3.18A Floor Joist Spans for Common Lumber Species

(Residential Sleeping Areas) Live Load = 30 psf, $L/\Delta_{LL} = 360$

LL = 30 psf
$L/\Delta_{LL} = 360$

			Dead Load = 10 psf				Dead Load = 20 psf			
			2x6	2x8	2x10	2x12	2x6	2x8	2x10	2x12
			Maximum Floor Joist Spans[1]							
Joist Spacing	Species and Grade		(ft-in.)	(ft-in.)	(ft-in.)	(ft-in.)	(ft-in.)	(ft-in.)	(ft-in.)	(ft-in.)
12 in.	Douglas Fir-Larch	SS	12 - 6	16 - 6	21 - 0	25 - 7	12 - 6	16 - 6	21 - 0	25 - 7
	Douglas Fir-Larch	No.1	12 - 0	15 - 10	20 - 3	24 - 8	12 - 0	15 - 7	19 - 0	22 - 0
	Douglas Fir-Larch	No.2	11 - 10	15 - 7	19 - 10	23 - 4	11 - 8	14 - 9	18 - 0	20 - 11
	Douglas Fir-Larch	No.3	9 - 11	12 - 7	15 - 5	17 - 10	8 - 11	11 - 3	13 - 9	16 - 0
	Hem-Fir	SS	11 - 10	15 - 7	19 - 10	24 - 2	11 - 10	15 - 7	19 - 10	24 - 2
	Hem-Fir	No.1	11 - 7	15 - 3	19 - 5	23 - 7	11 - 7	15 - 3	18 - 9	21 - 9
	Hem-Fir	No.2	11 - 0	14 - 6	18 - 6	22 - 6	11 - 0	14 - 4	17 - 6	20 - 4
	Hem-Fir	No.3	9 - 8	12 - 4	15 - 0	17 - 5	8 - 8	11 - 0	13 - 5	15 - 7
	Southern Pine	SS	12 - 3	16 - 2	20 - 8	25 - 1	12 - 3	16 - 2	20 - 8	25 - 1
	Southern Pine	No.1	11 - 10	15 - 7	19 - 10	24 - 2	11 - 10	15 - 7	18 - 7	22 - 0
	Southern Pine	No.2	11 - 3	14 - 11	18 - 1	21 - 4	10 - 9	13 - 8	16 - 2	19 - 1
	Southern Pine	No.3	9 - 2	11 - 6	14 - 0	16 - 6	8 - 2	10 - 3	12 - 6	14 - 9
	Spruce-Pine Fir	SS	11 - 7	15 - 3	19 - 5	23 - 7	11 - 7	15 - 3	19 - 5	23 - 7
	Spruce-Pine Fir	No.1	11 - 3	14 - 11	19 - 0	23 - 0	11 - 3	14 - 7	17 - 9	20 - 7
	Spruce-Pine Fir	No.2	11 - 3	14 - 11	19 - 0	23 - 0	11 - 3	14 - 7	17 - 9	20 - 7
	Spruce-Pine Fir	No.3	9 - 8	12 - 4	15 - 0	17 - 5	8 - 8	11 - 0	13 - 5	15 - 7
16 in.	Douglas Fir-Larch	SS	11 - 4	15 - 0	19 - 1	23 - 3	11 - 4	15 - 0	19 - 1	23 - 3
	Douglas Fir-Larch	No.1	10 - 11	14 - 5	18 - 5	21 - 4	10 - 8	13 - 6	16 - 5	19 - 1
	Douglas Fir-Larch	No.2	10 - 9	14 - 2	17 - 5	20 - 3	10 - 1	12 - 9	15 - 7	18 - 1
	Douglas Fir-Larch	No.3	8 - 7	10 - 11	13 - 4	15 - 5	7 - 8	9 - 9	11 - 11	13 - 10
	Hem-Fir	SS	10 - 9	14 - 2	18 - 0	21 - 11	10 - 9	14 - 2	18 - 0	21 - 11
	Hem-Fir	No.1	10 - 6	13 - 10	17 - 8	21 - 1	10 - 6	13 - 4	16 - 3	18 - 10
	Hem-Fir	No.2	10 - 0	13 - 2	16 - 10	19 - 8	9 - 10	12 - 5	15 - 2	17 - 7
	Hem-Fir	No.3	8 - 5	10 - 8	13 - 0	15 - 1	7 - 6	9 - 6	11 - 8	13 - 6
	Southern Pine	SS	11 - 2	14 - 8	18 - 9	22 - 10	11 - 2	14 - 8	18 - 9	22 - 10
	Southern Pine	No.1	10 - 9	14 - 2	18 - 0	21 - 4	10 - 9	13 - 9	16 - 1	19 - 1
	Southern Pine	No.2	10 - 3	13 - 3	15 - 8	18 - 6	9 - 4	11 - 10	14 - 0	16 - 6
	Southern Pine	No.3	7 - 11	10 - 0	12 - 1	14 - 4	7 - 1	8 - 11	10 - 10	12 - 10
	Spruce-Pine Fir	SS	10 - 6	13 - 10	17 - 8	21 - 6	10 - 6	13 - 10	17 - 8	21 - 4
	Spruce-Pine Fir	No.1	10 - 3	13 - 6	17 - 2	19 - 11	9 - 11	12 - 7	15 - 5	17 - 10
	Spruce-Pine Fir	No.2	10 - 3	13 - 6	17 - 2	19 - 11	9 - 11	12 - 7	15 - 5	17 - 10
	Spruce-Pine Fir	No.3	8 - 5	10 - 8	13 - 0	15 - 1	7 - 6	9 - 6	11 - 8	13 - 6
19.2 in.	Douglas Fir-Larch	SS	10 - 8	14 - 1	18 - 0	21 - 10	10 - 8	14 - 1	18 - 0	21 - 4
	Douglas Fir-Larch	No.1	10 - 4	13 - 7	16 - 9	19 - 6	9 - 8	12 - 4	15 - 0	17 - 5
	Douglas Fir-Larch	No.2	10 - 1	13 - 0	15 - 11	18 - 6	9 - 3	11 - 8	14 - 3	16 - 6
	Douglas Fir-Larch	No.3	7 - 10	10 - 0	12 - 2	14 - 1	7 - 0	8 - 11	10 - 11	12 - 7
	Hem-Fir	SS	10 - 1	13 - 4	17 - 0	20 - 8	10 - 1	13 - 4	17 - 0	20 - 7
	Hem-Fir	No.1	9 - 10	13 - 0	16 - 7	19 - 3	9 - 7	12 - 2	14 - 10	17 - 2
	Hem-Fir	No.2	9 - 5	12 - 5	15 - 6	17 - 11	8 - 11	11 - 4	13 - 10	16 - 1
	Hem-Fir	No.3	7 - 8	9 - 9	11 - 10	13 - 9	6 - 10	8 - 8	10 - 7	12 - 4
	Southern Pine	SS	10 - 6	13 - 10	17 - 8	21 - 6	10 - 6	13 - 10	17 - 8	21 - 6
	Southern Pine	No.1	10 - 1	13 - 4	16 - 5	19 - 6	9 - 11	12 - 7	14 - 8	17 - 5
	Southern Pine	No.2	9 - 6	12 - 1	14 - 4	16 - 10	8 - 6	10 - 10	12 - 10	15 - 1
	Southern Pine	No.3	7 - 3	9 - 1	11 - 0	13 - 1	6 - 5	8 - 2	9 - 10	11 - 8
	Spruce-Pine Fir	SS	9 - 10	13 - 0	16 - 7	20 - 2	9 - 10	13 - 0	16 - 7	19 - 6
	Spruce-Pine Fir	No.1	9 - 8	12 - 9	15 - 8	18 - 3	9 - 1	11 - 6	14 - 1	16 - 3
	Spruce-Pine Fir	No.2	9 - 8	12 - 9	15 - 8	18 - 3	9 - 1	11 - 6	14 - 1	16 - 3
	Spruce-Pine Fir	No.3	7 - 8	9 - 9	11 - 10	13 - 9	6 - 10	8 - 8	10 - 7	12 - 4
24 in.	Douglas Fir-Larch	SS	9 - 11	13 - 1	16 - 8	20 - 3	9 - 11	13 - 1	16 - 5	19 - 1
	Douglas Fir-Larch	No.1	9 - 7	12 - 4	15 - 0	17 - 5	8 - 8	11 - 0	13 - 5	15 - 7
	Douglas Fir-Larch	No.2	9 - 3	11 - 8	14 - 3	16 - 6	8 - 3	10 - 5	12 - 9	14 - 9
	Douglas Fir-Larch	No.3	7 - 0	8 - 11	10 - 11	12 - 7	6 - 3	8 - 0	9 - 9	11 - 3
	Hem-Fir	SS	9 - 4	12 - 4	15 - 9	19 - 2	9 - 4	12 - 4	15 - 9	18 - 5
	Hem-Fir	No.1	9 - 2	12 - 1	14 - 10	17 - 2	8 - 7	10 - 10	13 - 3	15 - 5
	Hem-Fir	No.2	8 - 9	11 - 4	13 - 10	16 - 1	8 - 0	10 - 2	12 - 5	14 - 4
	Hem-Fir	No.3	6 - 10	8 - 8	10 - 7	12 - 4	6 - 2	7 - 9	9 - 6	11 - 0
	Southern Pine	SS	9 - 9	12 - 10	16 - 5	19 - 11	9 - 9	12 - 10	16 - 5	19 - 8
	Southern Pine	No.1	9 - 4	12 - 4	14 - 8	17 - 5	8 - 10	11 - 3	13 - 1	15 - 7
	Southern Pine	No.2	8 - 6	10 - 10	12 - 10	15 - 1	7 - 7	9 - 8	11 - 5	13 - 6
	Southern Pine	No.3	6 - 5	8 - 2	9 - 10	11 - 8	5 - 9	7 - 3	8 - 10	10 - 5
	Spruce-Pine Fir	SS	9 - 2	12 - 1	15 - 5	18 - 9	9 - 2	12 - 1	15 - 0	17 - 5
	Spruce-Pine Fir	No.1	9 - 0	11 - 6	14 - 1	16 - 3	8 - 1	10 - 3	12 - 7	14 - 7
	Spruce-Pine Fir	No.2	9 - 0	11 - 6	14 - 1	16 - 3	8 - 1	10 - 3	12 - 7	14 - 7
	Spruce-Pine Fir	No.3	6 - 10	8 - 8	10 - 7	12 - 4	6 - 2	7 - 9	9 - 6	11 - 0

Check sources for availability of lumber in lengths greater than 20 feet.

1. Spans checked for live load deflection only.

Copyright © American Wood Council. Downloaded/printed pursuant to License Agreement. No reproduction or transfer authorized.

Table 3.18B Floor Joist Spans for Common Lumber Species

(Residential Living Areas) Live Load = 40 psf, $L/\Delta_{LL} = 360$

LL = 40 psf
$L/\Delta_{LL} = 360$

			Dead Load = 10 psf				Dead Load = 20 psf			
			2x6	2x8	2x10	2x12	2x6	2x8	2x10	2x12
			Maximum Floor Joist Spans[1]							
Joist Spacing	Species and Grade		(ft-in.)	(ft-in.)	(ft-in.)	(ft-in.)	(ft-in.)	(ft-in.)	(ft-in.)	(ft-in.)
12 in.	Douglas Fir-Larch	SS	11 - 4	15 - 0	19 - 1	23 - 3	11 - 4	15 - 0	19 - 1	23 - 3
	Douglas Fir-Larch	No.1	10 - 11	14 - 5	18 - 5	22 - 0	10 - 11	14 - 2	17 - 4	20 - 1
	Douglas Fir-Larch	No.2	10 - 9	14 - 2	18 - 0	20 - 11	10 - 8	13 - 6	16 - 5	19 - 1
	Douglas Fir-Larch	No.3	8 - 11	11 - 3	13 - 9	16 - 0	8 - 1	10 - 3	12 - 7	14 - 7
	Hem-Fir	SS	10 - 9	14 - 2	18 - 0	21 - 11	10 - 9	14 - 2	18 - 0	21 - 11
	Hem-Fir	No.1	10 - 6	13 - 10	17 - 8	21 - 6	10 - 6	13 - 10	17 - 1	19 - 10
	Hem-Fir	No.2	10 - 0	13 - 2	16 - 10	20 - 4	10 - 0	13 - 1	16 - 0	18 - 6
	Hem-Fir	No.3	8 - 8	11 - 0	13 - 5	15 - 7	7 - 11	10 - 0	12 - 3	14 - 3
	Southern Pine	SS	11 - 2	14 - 8	18 - 9	22 - 10	11 - 2	14 - 8	18 - 9	22 - 10
	Southern Pine	No.1	10 - 9	14 - 2	18 - 0	21 - 11	10 - 9	14 - 2	16 - 11	20 - 1
	Southern Pine	No.2	10 - 3	13 - 6	16 - 2	19 - 1	9 - 10	12 - 6	14 - 9	17 - 5
	Southern Pine	No.3	8 - 2	10 - 3	12 - 6	14 - 9	7 - 5	9 - 5	11 - 5	13 - 6
	Spruce-Pine Fir	SS	10 - 6	13 - 10	17 - 8	21 - 6	10 - 6	13 - 10	17 - 8	21 - 6
	Spruce-Pine Fir	No.1	10 - 3	13 - 6	17 - 3	20 - 7	10 - 3	13 - 3	16 - 3	18 - 10
	Spruce-Pine Fir	No.2	10 - 3	13 - 6	17 - 3	20 - 7	10 - 3	13 - 3	16 - 3	18 - 10
	Spruce-Pine Fir	No.3	8 - 8	11 - 0	13 - 5	15 - 7	7 - 11	10 - 0	12 - 3	14 - 3
16 in.	Douglas Fir-Larch	SS	10 - 4	13 - 7	17 - 4	21 - 1	10 - 4	13 - 7	17 - 4	21 - 1
	Douglas Fir-Larch	No.1	9 - 11	13 - 1	16 - 5	19 - 1	9 - 8	12 - 4	15 - 0	17 - 5
	Douglas Fir-Larch	No.2	9 - 9	12 - 9	15 - 7	18 - 1	9 - 3	11 - 8	14 - 3	16 - 6
	Douglas Fir-Larch	No.3	7 - 8	9 - 9	11 - 11	13 - 10	7 - 0	8 - 11	10 - 11	12 - 7
	Hem-Fir	SS	9 - 9	12 - 10	16 - 5	19 - 11	9 - 9	12 - 10	16 - 5	19 - 11
	Hem-Fir	No.1	9 - 6	12 - 7	16 - 0	18 - 10	9 - 6	12 - 2	14 - 10	17 - 2
	Hem-Fir	No.2	9 - 1	12 - 0	15 - 2	17 - 7	8 - 11	11 - 4	13 - 10	16 - 1
	Hem-Fir	No.3	7 - 6	9 - 6	11 - 8	13 - 6	6 - 10	8 - 8	10 - 7	12 - 4
	Southern Pine	SS	10 - 2	13 - 4	17 - 0	20 - 9	10 - 2	13 - 4	17 - 0	20 - 9
	Southern Pine	No.1	9 - 9	12 - 10	16 - 1	19 - 1	9 - 9	12 - 7	14 - 8	17 - 5
	Southern Pine	No.2	9 - 4	11 - 10	14 - 0	16 - 6	8 - 6	10 - 10	12 - 10	15 - 1
	Southern Pine	No.3	7 - 1	8 - 11	10 - 10	12 - 10	6 - 5	8 - 2	9 - 10	11 - 8
	Spruce-Pine Fir	SS	9 - 6	12 - 7	16 - 0	19 - 6	9 - 6	12 - 7	16 - 0	19 - 6
	Spruce-Pine Fir	No.1	9 - 4	12 - 3	15 - 5	17 - 10	9 - 1	11 - 6	14 - 1	16 - 3
	Spruce-Pine Fir	No.2	9 - 4	12 - 3	15 - 5	17 - 10	9 - 1	11 - 6	14 - 1	16 - 3
	Spruce-Pine Fir	No.3	7 - 6	9 - 6	11 - 8	13 - 6	6 - 10	8 - 8	10 - 7	12 - 4
19.2 in.	Douglas Fir-Larch	SS	9 - 8	12 - 10	16 - 4	19 - 10	9 - 8	12 - 10	16 - 4	19 - 6
	Douglas Fir-Larch	No.1	9 - 4	12 - 4	15 - 0	17 - 5	8 - 10	11 - 3	13 - 8	15 - 11
	Douglas Fir-Larch	No.2	9 - 2	11 - 8	14 - 3	16 - 6	8 - 5	10 - 8	13 - 0	15 - 1
	Douglas Fir-Larch	No.3	7 - 0	8 - 11	10 - 11	12 - 7	6 - 5	8 - 2	9 - 11	11 - 6
	Hem-Fir	SS	9 - 2	12 - 1	15 - 5	18 - 9	9 - 2	12 - 1	15 - 5	18 - 9
	Hem-Fir	No.1	9 - 0	11 - 10	14 - 10	17 - 2	8 - 9	11 - 1	13 - 6	15 - 8
	Hem-Fir	No.2	8 - 7	11 - 3	13 - 10	16 - 1	8 - 2	10 - 4	12 - 8	14 - 8
	Hem-Fir	No.3	6 - 10	8 - 8	10 - 7	12 - 4	6 - 3	7 - 11	9 - 8	11 - 3
	Southern Pine	SS	9 - 6	12 - 7	16 - 0	19 - 6	9 - 6	12 - 7	16 - 0	19 - 6
	Southern Pine	No.1	9 - 2	12 - 1	14 - 8	17 - 5	9 - 0	11 - 5	13 - 5	15 - 11
	Southern Pine	No.2	8 - 6	10 - 10	12 - 10	15 - 1	7 - 9	9 - 10	11 - 8	13 - 9
	Southern Pine	No.3	6 - 5	8 - 2	9 - 10	11 - 8	5 - 11	7 - 5	9 - 0	10 - 8
	Spruce-Pine Fir	SS	9 - 0	11 - 10	15 - 1	18 - 4	9 - 0	11 - 10	15 - 1	17 - 9
	Spruce-Pine Fir	No.1	8 - 9	11 - 6	14 - 1	16 - 3	8 - 3	10 - 6	12 - 10	14 - 10
	Spruce-Pine Fir	No.2	8 - 9	11 - 6	14 - 1	16 - 3	8 - 3	10 - 6	12 - 10	14 - 10
	Spruce-Pine Fir	No.3	6 - 10	8 - 8	10 - 7	12 - 4	6 - 3	7 - 11	9 - 8	11 - 3
24 in.	Douglas Fir-Larch	SS	9 - 0	11 - 11	15 - 2	18 - 5	9 - 0	11 - 11	15 - 0	17 - 5
	Douglas Fir-Larch	No.1	8 - 8	11 - 0	13 - 5	15 - 7	7 - 11	10 - 0	12 - 3	14 - 3
	Douglas Fir-Larch	No.2	8 - 3	10 - 5	12 - 9	14 - 9	7 - 6	9 - 6	11 - 8	13 - 6
	Douglas Fir-Larch	No.3	6 - 3	8 - 0	9 - 9	11 - 3	5 - 9	7 - 3	8 - 11	10 - 4
	Hem-Fir	SS	8 - 6	11 - 3	14 - 4	17 - 5	8 - 6	11 - 3	14 - 4	16 - 10
	Hem-Fir	No.1	8 - 4	10 - 10	13 - 3	15 - 5	7 - 10	9 - 11	12 - 1	14 - 0
	Hem-Fir	No.2	7 - 11	10 - 2	12 - 5	14 - 4	7 - 4	9 - 3	11 - 4	13 - 1
	Hem-Fir	No.3	6 - 2	7 - 9	9 - 6	11 - 0	5 - 7	7 - 1	8 - 8	10 - 1
	Southern Pine	SS	8 - 10	11 - 8	14 - 11	18 - 1	8 - 10	11 - 8	14 - 11	18 - 0
	Southern Pine	No.1	8 - 6	11 - 3	13 - 1	15 - 7	8 - 1	10 - 3	12 - 0	14 - 3
	Southern Pine	No.2	7 - 7	9 - 8	11 - 5	13 - 6	7 - 0	8 - 10	10 - 5	12 - 4
	Southern Pine	No.3	5 - 9	7 - 3	8 - 10	10 - 5	5 - 3	6 - 8	8 - 1	9 - 6
	Spruce-Pine Fir	SS	8 - 4	11 - 0	14 - 0	17 - 0	8 - 4	11 - 0	13 - 8	15 - 11
	Spruce-Pine Fir	No.1	8 - 1	10 - 3	12 - 7	14 - 7	7 - 5	9 - 5	11 - 6	13 - 4
	Spruce-Pine Fir	No.2	8 - 1	10 - 3	12 - 7	14 - 7	7 - 5	9 - 5	11 - 6	13 - 4
	Spruce-Pine Fir	No.3	6 - 2	7 - 9	9 - 6	11 - 0	5 - 7	7 - 1	8 - 8	10 - 1

Check sources for availability of lumber in lengths greater than 20 feet.

1. Spans checked for live load deflection only.

Copyright © American Wood Council. Downloaded/printed pursuant to License Agreement. No reproduction or transfer authorized.

Table 3.19 Representative Metal Plate Connected Wood Floor Truss Spans

Actual Design Spans Shall Be Obtained from the Truss Manufacturer
(Top Chord Live Load = 40 psf)

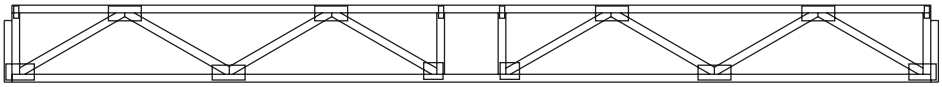

			Top Chord Dead Load = 5 psf Bottom Chord Dead Load = 5 psf		Top Chord Dead Load = 10 psf Bottom Chord Dead Load = 5 psf		Top Chord Dead Load = 10 psf Bottom Chord Dead Load = 10 psf	
			16" o.c.	24" o.c.	16" o.c.	24" o.c.	16" o.c.	24" o.c.
			Representative Floor Truss Spans					
Total Truss Depth	Species and Grade		(ft- in.)	(ft- in.)	(ft- in.)	(ft- in.)	(ft- in.)	(ft- in.)
12 in.	Douglas Fir-Larch	SS	21-0	20-0	21-0	20-0	21-0	20-0
	Douglas Fir-Larch	#1	21-0	19-0	21-0	17-0	19-4	16-7
	Douglas Fir-Larch	#2	20-4	17-0	20-0	16-4	19-0	15-9
	Hem-Fir	SS	18-6	18-6	18-6	18-4	18-4	18-0
	Hem-Fir	#1	18-6	17-0	18-3	16-0	18-0	15-2
	Hem-Fir	#2	18-6	16-0	18-0	14-4	17-9	14-2
	Southern Pine	SS	21-0	20-0	21-0	20-0	21-0	20-0
	Southern Pine	#1	21-0	19-0	21-0	17-7	20-0	17-0
	Southern Pine	#2	20-0	17-0	19-8	16-4	19-0	15-9
	Spruce-Pine-Fir	SS	17-6	14-9	17-6	14-8	17-0	14-4
	Spruce-Pine-Fir	#1	17-0	13-9	16-8	13-6	16-0	13-0
	Spruce-Pine-Fir	#2	16-6	13-9	16-0	12-0	15-6	11-6
16 in.	Douglas Fir-Larch	SS	26-0	26-0	26-0	25-2	26-0	23-0
	Douglas Fir-Larch	#1	26-0	21-4	25-6	20-3	23-4	18-4
	Douglas Fir-Larch	#2	24-6	19-6	23-4	18-8	21-1	16-8
	Hem-Fir	SS	25-0	25-0	25-0	24-0	25-0	22-0
	Hem-Fir	#1	24-6	20-0	24-0	19-0	22-0	17-0
	Hem-Fir	#2	22-6	18-0	21-8	17-2	20-0	15-3
	Southern Pine	SS	26-0	26-0	26-0	25-2	26-0	23-0
	Southern Pine	#1	25-0	22-0	25-9	20-9	24-0	18-9
	Southern Pine	#2	24-0	19-1	23-0	18-2	21-0	16-4
	Spruce-Pine-Fir	SS	24-0	21-3	24-2	20-2	23-2	18-8
	Spruce-Pine-Fir	#1	21-0	16-9	20-0	16-0	18-2	14-3
	Spruce-Pine-Fir	#2	21-0	16-9	20-0	16-0	18-2	14-3
20 in.	Douglas Fir-Larch	SS	26-0	26-0	26-0	26-0	26-0	26-0
	Douglas Fir-Larch	#1	26-0	24-3	26-0	23-0	26-0	20-6
	Douglas Fir-Larch	#2	26-0	22-2	26-0	21-0	24-1	18-9
	Hem-Fir	SS	26-0	26-0	26-0	26-0	26-0	24-9
	Hem-Fir	#1	26-0	22-7	26-0	21-7	25-0	19-4
	Hem-Fir	#2	25-6	20-5	24-7	19-7	22-2	17-3
	Southern Pine	SS	26-0	26-0	26-0	26-0	26-0	26-0
	Southern Pine	#1	26-0	24-6	26-0	23-3	26-0	20-9
	Southern Pine	#2	26-0	21-3	26-0	20-6	24-0	18-4
	Spruce-Pine-Fir	SS	26-0	24-1	26-0	23-0	26-0	21-0
	Spruce-Pine-Fir	#1	23-6	18-9	22-2	18-0	20-6	16-1
	Spruce-Pine-Fir	#2	23-6	18-9	22-2	18-0	20-6	16-1
24 in.	Douglas Fir-Larch	SS	26-0	26-0	26-0	26-0	26-0	26-0
	Douglas Fir-Larch	#1	26-0	26-0	26-0	25-4	26-0	23-0
	Douglas Fir-Larch	#2	26-0	24-3	26-0	23-2	26-0	20-9
	Hem-Fir	SS	26-0	26-0	26-0	26-0	26-0	26-0
	Hem-Fir	#1	26-0	25-0	26-0	24-0	26-0	21-4
	Hem-Fir	#2	26-0	22-8	26-0	21-4	24-9	19-2
	Southern Pine	SS	26-0	26-0	26-0	26-0	26-0	26-0
	Southern Pine	#1	26-0	26-0	26-0	25-9	26-0	23-6
	Southern Pine	#2	26-0	24-0	26-0	23-0	26-0	20-4
	Spruce-Pine-Fir	SS	26-0	26-0	26-0	25-3	26-0	23-4
	Spruce-Pine-Fir	#1	26-0	20-8	24-9	20-0	23-0	17-9
	Spruce-Pine-Fir	#2	26-0	20-8	24-9	20-0	23-0	17-9

See Table 3.19 footnotes.

Copyright © American Wood Council. Downloaded/printed pursuant to License Agreement. No reproduction or transfer authorized.

Footnotes to Table 3.19

- This table provides example spans for the parameters shown and is not intended to be used for actual design purposes. Spans have been determined in accordance with the 2007 edition of the Truss Plate Institute's *National Design Standard for Metal Plate Connected Wood Truss Construction, ANSI/TPI 1-07*, and the 2009 *International Residential Code® (IRC®)*. Truss spans based on different loads, lumber species and grades, truss depths and web configurations are possible. Floor spans greater than 26 feet are possible but are limited by the context of this manual. Contact a truss manufacturer for actual floor truss designs and solutions to each specific application.
- This table applies only to wood floor trusses that are shop-built and designed and manufactured in accordance with ANSI/TPI 1.
- The spans shown in this table apply to floor trusses used in enclosed structures or where the moisture content in use does not exceed 19 percent for an extended period of time.
- All lumber for the floor trusses in this table is 2x4 oriented flatwise. The maximum panel length in these trusses is 30 inches.

Copyright © American Wood Council. Downloaded/printed pursuant to License Agreement. No reproduction or transfer authorized.
AMERICAN WOOD COUNCIL

Table 3.20A1 Maximum Exterior Loadbearing[1] and Non-Loadbearing Stud Lengths for Common Lumber Species Resisting Interior Zone Wind Loads - Stud Deflection Limit = H/180

Exposure B H/180

(Fully Sheathed with a Minimum Sheathing Material)[a]

Wind Speed 3-second gust (mph) (See Figure 1.1)			90			95			100			105		
Stud Spacing (in.)	Species	Grade	2x4	2x6	2x8	2x4	2x6	2x8	2x4	2x6	2x8	2x4	2x6	2x8
			Maximum Allowable Stud Length (ft-in.)[1]											
12	DFL	SS	14-0††	20-0†	20-0†	14-0††	20-0†	20-0†	14-0††	20-0†	20-0†	14-0††	20-0†	20-0†
	DFL	No.1	14-0††	20-0†	20-0†	14-0††	20-0†	20-0†	14-0††	20-0†	20-0†	14-0††	20-0†	20-0†
	DFL	No.2	14-0††	20-0†	20-0†	14-0††	20-0†	20-0†	14-0††	20-0†	20-0†	14-0††	20-0†	20-0†
	DFL	No.3/Stud	14-0††	20-0†	20-0†	14-0††	20-0†	20-0†	14-0††	20-0†	20-0†	13 - 11	20-0†	20-0†
	DFL	Standard	14-0††	-	-	14-0††	-	-	14-0††	-	-	13 - 6	-	-
	HF	SS	14-0††	20-0†	20-0†	14-0††	20-0†	20-0†	14-0††	20-0†	20-0†	14-0††	20-0†	20-0†
	HF	No.1	14-0††	20-0†	20-0†	14-0††	20-0†	20-0†	14-0††	20-0†	20-0†	14-0††	20-0†	20-0†
	HF	No.2	14-0††	20-0†	20-0†	14-0††	20-0†	20-0†	14-0††	20-0†	20-0†	13 - 7	20-0†	20-0†
	HF	No.3/Stud	14-0††	20-0†	20-0†	14-0††	20-0†	20-0†	13 - 8	20-0†	20-0†	13 - 2	20-0†	20-0†
	HF	Standard	14-0††	-	-	14-0††	-	-	13 - 8	-	-	13 - 2	-	-
	SP	SS	14-0††	20-0†	20-0†	14-0††	20-0†	20-0†	14-0††	20-0†	20-0†	14-0††	20-0†	20-0†
	SP	No.1	14-0††	20-0†	20-0†	14-0††	20-0†	20-0†	14-0††	20-0†	20-0†	14-0††	20-0†	20-0†
	SP	No.2	14-0††	20-0†	20-0†	14-0††	20-0†	20-0†	14-0††	20-0†	20-0†	13 - 11	20-0†	20-0†
	SP	No.3	14-0††	20-0†	20-0†	14-0††	20-0†	20-0†	14-0††	20-0†	20-0†	13 - 7	20-0†	20-0†
	SP	Stud	14-0††	20-0†	20-0†	14-0††	20-0†	20-0†	14-0††	20-0†	20-0†	13 - 7	20-0†	20-0†
	SP	Standard	13 - 8	-	-	13 - 7	-	-	12 - 10	-	-	12 - 2	-	-
	SPF	SS	14-0††	20-0†	20-0†	14-0††	20-0†	20-0†	14-0††	20-0†	20-0†	14-0††	20-0†	20-0†
	SPF	No.1	14-0††	20-0†	20-0†	14-0††	20-0†	20-0†	14-0††	20-0†	20-0†	13 - 11	20-0†	20-0†
	SPF	No.2	14-0††	20-0†	20-0†	14-0††	20-0†	20-0†	14-0††	20-0†	20-0†	13 - 11	20-0†	20-0†
	SPF	No.3/Stud	14-0††	20-0†	20-0†	14-0††	20-0†	20-0†	13 - 8	20-0†	20-0†	13 - 2	20-0†	20-0†
	SPF	Standard	14-0††	-	-	14-0††	-	-	13 - 8	-	-	13 - 2	-	-
16	DFL	SS	14-0††	20-0†	20-0†	14-0††	20-0†	20-0†	14-0††	20-0†	20-0†	14-0††	20-0†	20-0†
	DFL	No.1	14-0††	20-0†	20-0†	14-0††	20-0†	20-0†	13 - 11	20-0†	20-0†	13 - 6	20-0†	20-0†
	DFL	No.2	14-0††	20-0†	20-0†	14-0††	20-0†	20-0†	13 - 8	20-0†	20-0†	13 - 2	20-0†	20-0†
	DFL	No.3/Stud	13 - 6	20-0†	20-0†	13 - 6	20-0†	20-0†	13 - 0	20-0†	20-0†	12 - 7	20-0†	20-0†
	DFL	Standard	13 - 0	-	-	12 - 11	-	-	12 - 2	-	-	11 - 7	-	-
	HF	SS	14-0††	20-0†	20-0†	14-0††	20-0†	20-0†	13 - 8	20-0†	20-0†	13 - 2	20-0†	20-0†
	HF	No.1	13 - 10	20-0†	20-0†	13 - 10	20-0†	20-0†	13 - 4	20-0†	20-0†	12 - 11	20-0†	20-0†
	HF	No.2	13 - 2	20-0†	20-0†	13 - 2	20-0†	20-0†	12 - 8	20-0†	20-0†	12 - 3	19 - 8	20-0†
	HF	No.3/Stud	12 - 10	20-0†	20-0†	12 - 9	20-0†	20-0†	12 - 4	19 - 10	20-0†	11 - 11	19 - 2	20-0†
	HF	Standard	12 - 8	-	-	12 - 7	-	-	11 - 11	-	-	11 - 4	-	-
	SP	SS	14-0††	20-0†	20-0†	14-0††	20-0†	20-0†	14-0††	20-0†	20-0†	13 - 9	20-0†	20-0†
	SP	No.1	14-0††	20-0†	20-0†	14-0††	20-0†	20-0†	13 - 8	20-0†	20-0†	13 - 2	20-0†	20-0†
	SP	No.2	13 - 6	20-0†	20-0†	13 - 6	20-0†	20-0†	13 - 0	20-0†	20-0†	12 - 7	20-0†	20-0†
	SP	No.3	13 - 2	20-0†	20-0†	13 - 2	20-0†	20-0†	12 - 8	19 - 10	20-0†	12 - 3	18 - 10	20-0†
	SP	Stud	13 - 2	20-0†	20-0†	13 - 2	20-0†	20-0†	12 - 8	19 - 10	20-0†	12 - 3	18 - 10	20-0†
	SP	Standard	11 - 10	-	-	11 - 8	-	-	11 - 0	-	-	10 - 5	-	-
	SPF	SS	13 - 10	20-0†	20-0†	13 - 10	20-0†	20-0†	13 - 4	20-0†	20-0†	12 - 11	20-0†	20-0†
	SPF	No.1	13 - 6	20-0†	20-0†	13 - 6	20-0†	20-0†	13 - 0	20-0†	20-0†	12 - 7	20-0†	20-0†
	SPF	No.2	13 - 6	20-0†	20-0†	13 - 6	20-0†	20-0†	13 - 0	20-0†	20-0†	12 - 7	20-0†	20-0†
	SPF	No.3/Stud	12 - 10	20-0†	20-0†	12 - 9	20-0†	20-0†	12 - 4	19 - 10	20-0†	11 - 11	19 - 2	20-0†
	SPF	Standard	12 - 8	-	-	12 - 7	-	-	11 - 11	-	-	11 - 4	-	-
24	DFL	SS	13 - 1	20-0†	20-0†	13 - 0	20-0†	20-0†	12 - 7	20-0†	20-0†	12 - 2	19 - 6	20-0†
	DFL	No.1	12 - 7	19 - 10	20-0†	12 - 6	19 - 10	20-0†	12 - 1	19 - 5	20-0†	11 - 8	18 - 9	20-0†
	DFL	No.2	12 - 4	19 - 5	20-0†	12 - 3	19 - 5	20-0†	11 - 10	19 - 0	20-0†	11 - 5	18 - 5	20-0†
	DFL	No.3/Stud	11 - 10	18 - 2	20-0†	11 - 9	18 - 2	20-0†	11 - 4	17 - 6	20-0†	10 - 11	16 - 7	20-0†
	DFL	Standard	10 - 7	-	-	10 - 5	-	-	9 - 10	-	-	9 - 4	-	-
	HF	SS	12 - 4	19 - 5	20-0†	12 - 3	19 - 5	20-0†	11 - 10	19 - 0	20-0†	11 - 5	18 - 5	20-0†
	HF	No.1	12 - 1	19 - 0	20-0†	12 - 0	19 - 0	20-0†	11 - 7	18 - 7	20-0†	11 - 2	18 - 0	20-0†
	HF	No.2	11 - 6	18 - 2	20-0†	11 - 5	18 - 2	20-0†	11 - 0	17 - 8	20-0†	10 - 8	17 - 1	20-0†
	HF	No.3/Stud	11 - 3	17 - 8	20-0†	11 - 1	17 - 8	20-0†	10 - 9	17 - 0	20-0†	10 - 4	16 - 2	20-0†
	HF	Standard	10 - 4	-	-	10 - 2	-	-	9 - 7	-	-	9 - 1	-	-
	SP	SS	12 - 10	20-0†	20-0†	12 - 9	20-0†	20-0†	12 - 4	19 - 10	20-0†	11 - 11	19 - 2	20-0†
	SP	No.1	12 - 4	19 - 5	20-0†	12 - 3	19 - 5	20-0†	11 - 10	19 - 0	20-0†	11 - 5	18 - 5	20-0†
	SP	No.2	11 - 10	18 - 7	20-0†	11 - 9	18 - 7	20-0†	11 - 4	18 - 2	20-0†	10 - 11	17 - 7	20-0†
	SP	No.3	11 - 3	16 - 8	20-0†	11 - 1	16 - 8	20-0†	10 - 6	15 - 11	20-0†	10 - 0	15 - 2	19 - 5
	SP	Stud	11 - 3	16 - 8	20-0†	11 - 1	16 - 8	20-0†	10 - 6	15 - 11	20-0†	10 - 0	15 - 2	19 - 5
	SP	Standard	9 - 8	-	-	9 - 4	-	-	8 - 10	-	-	8 - 5	-	-
	SPF	SS	12 - 1	19 - 0	20-0†	12 - 0	19 - 0	20-0†	11 - 7	18 - 7	20-0†	11 - 2	18 - 0	20-0†
	SPF	No.1	11 - 10	18 - 7	20-0†	11 - 9	18 - 7	20-0†	11 - 4	18 - 2	20-0†	10 - 11	17 - 7	20-0†
	SPF	No.2	11 - 10	18 - 7	20-0†	11 - 9	18 - 7	20-0†	11 - 4	18 - 2	20-0†	10 - 11	17 - 7	20-0†
	SPF	No.3/Stud	11 - 3	17 - 8	20-0†	11 - 1	17 - 8	20-0†	10 - 9	17 - 0	20-0†	10 - 4	16 - 2	20-0†
	SPF	Standard	10 - 4	-	-	10 - 2	-	-	9 - 7	-	-	9 - 1	-	-

See Table 3.20A footnotes.

Copyright © American Wood Council. Downloaded/printed pursuant to License Agreement. No reproduction or transfer authorized.

Table 3.20A1 (Cont.) Maximum Exterior Loadbearing[1] and Non-Loadbearing Stud Lengths for Common Lumber Species Resisting Interior Zone Wind Loads - Stud Deflection Limit = H/180

Exposure B H/180

(Fully Sheathed with a Minimum Sheathing Material)[a]

Wind Speed 3-second gust (mph) (See Figure 1.1)			110			115			120			130			140		
Stud Spacing (in.)	Species	Grade	2x4	2x6	2x8	2x4	2x6	2x8	2x4	2x6	2x8	2x4	2x6	2x8	2x4	2x6	2x8
			Maximum Allowable Stud Length (ft-in.)[1]														
12	DFL	SS	14-0††	20-0†	20-0†	14-0††	20-0†	20-0†	14-0††	20-0†	20-0†	13 - 4	20-0†	20-0†	12 - 8	20-0†	20-0†
	DFL	No.1	14-0††	20-0†	20-0†	14 - 0	20-0†	20-0†	13 - 7	20-0†	20-0†	12 - 10	20-0†	20-0†	12 - 2	19 - 7	20-0†
	DFL	No.2	14-0††	20-0†	20-0†	13 - 8	20-0†	20-0†	13 - 3	20-0†	20-0†	12 - 7	20-0†	20-0†	11 - 11	19 - 2	20-0†
	DFL	No.3/Stud	13 - 6	20-0†	20-0†	13 - 1	20-0†	20-0†	12 - 8	20-0†	20-0†	12 - 0	19 - 2	20-0†	11 - 5	17 - 8	20-0†
	DFL	Standard	12 - 10	-	-	12 - 3	-	-	11 - 9	-	-	10 - 9	-	-	9 - 11	-	-
	HF	SS	14-0††	20-0†	20-0†	13 - 8	20-0†	20-0†	13 - 3	20-0†	20-0†	12 - 7	20-0†	20-0†	11 - 11	19 - 2	20-0†
	HF	No.1	13 - 10	20-0†	20-0†	13 - 5	20-0†	20-0†	13 - 0	20-0†	20-0†	12 - 3	19 - 9	20-0†	11 - 8	18 - 9	20-0†
	HF	No.2	13 - 2	20-0†	20-0†	12 - 9	20-0†	20-0†	12 - 4	19 - 10	20-0†	11 - 8	18 - 9	20-0†	11 - 1	17 - 10	20-0†
	HF	No.3/Stud	12 - 9	20-0†	20-0†	12 - 5	19 - 10	20-0†	12 - 0	19 - 3	20-0†	11 - 4	18 - 3	20-0†	10 - 9	17 - 3	20-0†
	HF	Standard	12 - 7	-	-	12 - 0	-	-	11 - 5	-	-	10 - 6	-	-	9 - 8	-	-
	SP	SS	14-0††	20-0†	20-0†	14-0††	20-0†	20-0†	13 - 10	20-0†	20-0†	13 - 1	20-0†	20-0†	12 - 5	20 - 0	20-0†
	SP	No.1	14-0††	20-0†	20-0†	13 - 8	20-0†	20-0†	13 - 3	20-0†	20-0†	12 - 7	20-0†	20-0†	11 - 11	19 - 2	20-0†
	SP	No.2	13 - 6	20-0†	20-0†	13 - 1	20-0†	20-0†	12 - 8	20-0†	20-0†	12 - 0	19 - 3	20-0†	11 - 5	18 - 3	20-0†
	SP	No.3	13 - 2	20-0†	20-0†	12 - 9	19 - 11	20-0†	12 - 4	19 - 0	20-0†	11 - 6	17 - 5	20-0†	10 - 7	16 - 1	20-0†
	SP	Stud	13 - 2	20-0†	20-0†	12 - 9	19 - 11	20-0†	12 - 4	19 - 0	20-0†	11 - 6	17 - 5	20-0†	10 - 7	16 - 1	20-0†
	SP	Standard	11 - 7	-	-	11 - 1	-	-	10 - 7	-	-	9 - 8	-	-	9 - 0	-	-
	SPF	SS	13 - 10	20-0†	20-0†	13 - 5	20-0†	20-0†	13 - 0	20-0†	20-0†	12 - 3	19 - 9	20-0†	11 - 8	18 - 9	20-0†
	SPF	No.1	13 - 6	20-0†	20-0†	13 - 1	20-0†	20-0†	12 - 8	20-0†	20-0†	12 - 0	19 - 3	20-0†	11 - 5	18 - 3	20-0†
	SPF	No.2	13 - 6	20-0†	20-0†	13 - 1	20-0†	20-0†	12 - 8	20-0†	20-0†	12 - 0	19 - 3	20-0†	11 - 5	18 - 3	20-0†
	SPF	No.3/Stud	12 - 9	20-0†	20-0†	12 - 5	19 - 10	20-0†	12 - 0	19 - 3	20-0†	11 - 4	18 - 3	20-0†	10 - 9	17 - 3	20-0†
	SPF	Standard	12 - 7	-	-	12 - 0	-	-	11 - 5	-	-	10 - 6	-	-	9 - 8	-	-
16	DFL	SS	13 - 7	20-0†	20-0†	13 - 2	20-0†	20-0†	12 - 9	20-0†	20-0†	12 - 1	19 - 4	20-0†	11 - 5	18 - 5	20-0†
	DFL	No.1	13 - 0	20-0†	20-0†	12 - 8	20-0†	20-0†	12 - 3	19 - 8	20-0†	11 - 7	18 - 8	20-0†	11 - 0	17 - 8	20-0†
	DFL	No.2	12 - 9	20-0†	20-0†	12 - 5	19 - 10	20-0†	12 - 0	19 - 3	20-0†	11 - 4	18 - 3	20-0†	10 - 9	17 - 4	20-0†
	DFL	No.3/Stud	12 - 2	19 - 7	20-0†	11 - 10	18 - 8	20-0†	11 - 6	17 - 10	20-0†	10 - 10	16 - 5	20-0†	10 - 1	15 - 2	19 - 6
	DFL	Standard	11 - 0	-	-	10 - 6	-	-	10 - 0	-	-	9 - 3	-	-	8 - 6	-	-
	HF	SS	12 - 9	20-0†	20-0†	12 - 5	19 - 10	20-0†	12 - 0	19 - 3	20-0†	11 - 4	18 - 3	20-0†	10 - 9	17 - 4	20-0†
	HF	No.1	12 - 6	20-0†	20-0†	12 - 1	19 - 5	20-0†	11 - 9	18 - 10	20-0†	11 - 1	17 - 10	20-0†	10 - 7	16 - 11	20-0†
	HF	No.2	11 - 10	19 - 1	20-0†	11 - 6	18 - 6	20-0†	11 - 2	17 - 11	20-0†	10 - 7	17 - 0	20-0†	10 - 0	16 - 1	20-0†
	HF	No.3/Stud	11 - 7	18 - 6	20-0†	11 - 2	18 - 0	20-0†	10 - 10	17 - 5	20-0†	10 - 3	16 - 0	20-0†	9 - 9	14 - 9	19 - 0
	HF	Standard	10 - 9	-	-	10 - 3	-	-	9 - 10	-	-	9 - 0	-	-	8 - 4	-	-
	SP	SS	13 - 4	20-0†	20-0†	12 - 11	20-0†	20-0†	12 - 6	20-0†	20-0†	11 - 10	19 - 0	20-0†	11 - 3	18 - 1	20-0†
	SP	No.1	12 - 9	20-0†	20-0†	12 - 5	19 - 10	20-0†	12 - 0	19 - 3	20-0†	11 - 4	18 - 3	20-0†	10 - 9	17 - 4	20-0†
	SP	No.2	12 - 2	19 - 7	20-0†	11 - 10	19 - 0	20-0†	11 - 6	18 - 5	20-0†	10 - 10	17 - 5	20-0†	10 - 4	16 - 6	20-0†
	SP	No.3	11 - 9	17 - 11	20-0†	11 - 3	17 - 1	20-0†	10 - 9	16 - 4	20-0†	9 - 10	15 - 0	19 - 2	9 - 1	13 - 10	17 - 8
	SP	Stud	11 - 9	17 - 11	20-0†	11 - 3	17 - 1	20-0†	10 - 9	16 - 4	20-0†	9 - 10	15 - 0	19 - 2	9 - 1	13 - 10	17 - 8
	SP	Standard	9 - 11	-	-	9 - 6	-	-	9 - 1	-	-	8 - 4	-	-	-	-	-
	SPF	SS	12 - 6	20-0†	20-0†	12 - 1	19 - 5	20-0†	11 - 9	18 - 10	20-0†	11 - 1	17 - 10	20-0†	10 - 7	16 - 11	20-0†
	SPF	No.1	12 - 2	19 - 7	20-0†	11 - 10	19 - 0	20-0†	11 - 6	18 - 5	20-0†	10 - 10	17 - 5	20-0†	10 - 4	16 - 6	20-0†
	SPF	No.2	12 - 2	19 - 7	20-0†	11 - 10	19 - 0	20-0†	11 - 6	18 - 5	20-0†	10 - 10	17 - 5	20-0†	10 - 4	16 - 6	20-0†
	SPF	No.3/Stud	11 - 7	18 - 6	20-0†	11 - 2	18 - 0	20-0†	10 - 10	17 - 5	20-0†	10 - 3	16 - 0	20-0†	9 - 9	14 - 9	19 - 0
	SPF	Standard	10 - 9	-	-	10 - 3	-	-	9 - 10	-	-	9 - 0	-	-	8 - 4	-	-
24	DFL	SS	11 - 9	18 - 11	20-0†	11 - 5	18 - 4	20-0†	11 - 1	17 - 9	20-0†	10 - 6	16 - 10	20-0†	9 - 11	16 - 0	20-0†
	DFL	No.1	11 - 4	18 - 2	20-0†	11 - 0	17 - 7	20-0†	10 - 8	17 - 1	20-0†	10 - 1	16 - 2	20-0†	9 - 7	15 - 4	20-0†
	DFL	No.2	11 - 1	17 - 10	20-0†	10 - 9	17 - 3	20-0†	10 - 5	16 - 9	20-0†	9 - 10	15 - 10	20-0†	9 - 4	15 - 0	20-0†
	DFL	No.3/Stud	10 - 6	15 - 9	20-0†	10 - 0	15 - 1	19 - 5	9 - 7	14 - 4	18 - 6	8 - 9	13 - 2	17 - 0	8 - 1	12 - 2	15 - 8
	DFL	Standard	8 - 10	-	-	8 - 6	-	-	8 - 1	-	-	-	-	-	-	-	-
	HF	SS	11 - 1	17 - 10	20-0†	10 - 9	17 - 3	20-0†	10 - 5	16 - 9	20-0†	9 - 10	15 - 10	20-0†	9 - 4	15 - 0	20-0†
	HF	No.1	10 - 10	17 - 5	20-0†	10 - 6	16 - 10	20-0†	10 - 2	16 - 4	20-0†	9 - 8	15 - 6	20-0†	9 - 2	14 - 8	19 - 8
	HF	No.2	10 - 4	16 - 7	20-0†	10 - 0	16 - 0	20-0†	9 - 8	15 - 7	20-0†	9 - 2	14 - 9	19 - 8	8 - 9	14 - 0	18 - 8
	HF	No.3/Stud	10 - 0	15 - 4	19 - 10	9 - 9	14 - 8	18 - 11	9 - 4	14 - 0	18 - 1	8 - 7	12 - 10	16 - 7	7 - 11	11 - 10	15 - 3
	HF	Standard	8 - 8	-	-	8 - 3	-	-	7 - 11	-	-	-	-	-	-	-	-
	SP	SS	11 - 7	18 - 6	20-0†	11 - 2	18 - 0	20-0†	10 - 10	17 - 5	20-0†	10 - 3	16 - 6	20-0†	9 - 9	15 - 8	20-0†
	SP	No.1	11 - 1	17 - 10	20-0†	10 - 9	17 - 3	20-0†	10 - 5	16 - 9	20-0†	9 - 10	15 - 10	20-0†	9 - 4	15 - 0	20-0†
	SP	No.2	10 - 7	17 - 0	20-0†	10 - 3	16 - 6	20-0†	10 - 0	16 - 0	20-0†	9 - 5	15 - 1	20-0†	8 - 11	14 - 4	19 - 2
	SP	No.3	9 - 6	14 - 5	18 - 5	9 - 0	13 - 9	17 - 7	8 - 8	13 - 1	16 - 10	7 - 11	12 - 0	15 - 5	-	11 - 1	14 - 3
	SP	Stud	9 - 6	14 - 5	18 - 5	9 - 0	13 - 9	17 - 7	8 - 8	13 - 1	16 - 10	7 - 11	12 - 0	15 - 5	-	11 - 1	14 - 3
	SP	Standard	8 - 0	-	-	-	-	-	-	-	-	-	-	-	-	-	-
	SPF	SS	10 - 10	17 - 5	20-0†	10 - 6	16 - 10	20-0†	10 - 2	16 - 4	20-0†	9 - 8	15 - 6	20-0†	9 - 2	14 - 8	19 - 8
	SPF	No.1	10 - 7	17 - 0	20-0†	10 - 3	16 - 6	20-0†	10 - 0	16 - 0	20-0†	9 - 5	15 - 1	20-0†	8 - 11	14 - 4	19 - 2
	SPF	No.2	10 - 7	17 - 0	20-0†	10 - 3	16 - 6	20-0†	10 - 0	16 - 0	20-0†	9 - 5	15 - 1	20-0†	8 - 11	14 - 4	19 - 2
	SPF	No.3/Stud	10 - 0	15 - 4	19 - 10	9 - 9	14 - 8	18 - 11	9 - 4	14 - 0	18 - 1	8 - 7	12 - 10	16 - 7	7 - 11	11 - 10	15 - 3
	SPF	Standard	8 - 8	-	-	8 - 3	-	-	7 - 11	-	-	-	-	-	-	-	-

See Table 3.20A footnotes.

Copyright © American Wood Council. Downloaded/printed pursuant to License Agreement. No reproduction or transfer authorized.

Table 3.20A1 (Cont.) **Maximum Exterior Loadbearing[1] and Non-Loadbearing Stud Lengths for Common Lumber Species Resisting Interior Zone Wind Loads - Stud Deflection Limit = H/180**

(Fully Sheathed with a Minimum Sheathing Material)[a]

Exposure B H/180

Wind Speed 3-second gust (mph) (See Figure 1.1)			150			160			170			180			195		
Stud Spacing (in.)	Species	Grade	2x4	2x6	2x8	2x4	2x6	2x8	2x4	2x6	2x8	2x4	2x6	2x8	2x4	2x6	2x8
			Maximum Allowable Stud Length (ft-in.)[1]														
12	DFL	SS	12 - 1	19 - 5	20-0†	11 - 6	18 - 6	20-0†	11 - 1	17 - 9	20-0†	10 - 8	17 - 1	20-0†	10 - 1	16 - 2	20-0†
	DFL	No.1	11 - 7	18 - 8	20-0†	11 - 1	17 - 10	20-0†	10 - 8	17 - 1	20-0†	10 - 3	16 - 5	20-0†	9 - 8	15 - 6	20-0†
	DFL	No.2	11 - 4	18 - 3	20-0†	10 - 10	17 - 5	20-0†	10 - 5	16 - 9	20-0†	10 - 0	16 - 1	20-0†	9 - 6	15 - 2	20-0†
	DFL	No.3/Stud	10 - 10	16 - 5	20-0†	10 - 2	15 - 4	19 - 9	9 - 7	14 - 4	18 - 6	9 - 0	13 - 6	17 - 5	8 - 3	12 - 5	16 - 0
	DFL	Standard	9 - 3	-	-	8 - 7	-	-	8 - 1	-	-	-	-	-	-	-	-
	HF	SS	11 - 4	18 - 3	20-0†	10 - 10	17 - 5	20-0†	10 - 5	16 - 9	20-0†	10 - 0	16 - 1	20-0†	9 - 6	15 - 2	20-0†
	HF	No.1	11 - 1	17 - 10	20-0†	10 - 8	17 - 1	20-0†	10 - 2	16 - 4	20-0†	9 - 9	15 - 9	20-0†	9 - 3	14 - 10	19 - 10
	HF	No.2	10 - 7	17 - 0	20-0†	10 - 1	16 - 3	20-0†	9 - 8	15 - 7	20-0†	9 - 4	14 - 11	20 - 0	8 - 10	14 - 2	18 - 11
	HF	No.3/Stud	10 - 3	16 - 0	20-0†	9 - 10	14 - 11	19 - 3	9 - 4	14 - 0	18 - 0	8 - 9	13 - 2	16 - 11	8 - 0	12 - 1	15 - 7
	HF	Standard	9 - 0	-	-	8 - 5	-	-	7 - 11	-	-	-	-	-	-	-	-
	SP	SS	11 - 10	19 - 0	20-0†	11 - 4	18 - 2	20-0†	10 - 10	17 - 5	20-0†	10 - 5	16 - 9	20-0†	9 - 10	15 - 10	20-0†
	SP	No.1	11 - 4	18 - 3	20-0†	10 - 10	17 - 5	20-0†	10 - 5	16 - 9	20-0†	10 - 0	16 - 1	20-0†	9 - 6	15 - 2	20-0†
	SP	No.2	10 - 10	17 - 5	20-0†	10 - 4	16 - 8	20-0†	9 - 11	16 - 0	20-0†	9 - 7	15 - 4	20-0†	9 - 0	14 - 6	19 - 4
	SP	No.3	9 - 10	15 - 0	19 - 2	9 - 2	14 - 0	17 - 11	8 - 7	13 - 1	16 - 9	8 - 1	12 - 4	15 - 9	-	11 - 4	14 - 6
	SP	Stud	9 - 10	15 - 0	19 - 2	9 - 2	14 - 0	17 - 11	8 - 7	13 - 1	16 - 9	8 - 1	12 - 4	15 - 9	-	11 - 4	14 - 6
	SP	Standard	8 - 4	-	-	7 - 9	-	-	-	-	-	-	-	-	-	-	-
	SPF	SS	11 - 1	17 - 10	20-0†	10 - 8	17 - 1	20-0†	10 - 2	16 - 4	20-0†	9 - 9	15 - 9	20-0†	9 - 3	14 - 10	19 - 10
	SPF	No.1	10 - 10	17 - 5	20-0†	10 - 4	16 - 8	20-0†	9 - 11	16 - 0	20-0†	9 - 7	15 - 4	20-0†	9 - 0	14 - 6	19 - 4
	SPF	No.2	10 - 10	17 - 5	20-0†	10 - 4	16 - 8	20-0†	9 - 11	16 - 0	20-0†	9 - 7	15 - 4	20-0†	9 - 0	14 - 6	19 - 4
	SPF	No.3/Stud	10 - 3	16 - 0	20-0†	9 - 10	14 - 11	19 - 3	9 - 4	14 - 0	18 - 0	8 - 9	13 - 2	16 - 11	8 - 0	12 - 1	15 - 7
	SPF	Standard	9 - 0	-	-	8 - 5	-	-	7 - 11	-	-	-	-	-	-	-	-
16	DFL	SS	10 - 11	17 - 6	20-0†	10 - 5	16 - 9	20-0†	10 - 0	16 - 1	20-0†	9 - 7	15 - 5	20-0†	9 - 1	14 - 7	19 - 6
	DFL	No.1	10 - 6	16 - 10	20-0†	10 - 0	16 - 1	20-0†	9 - 8	15 - 5	20-0†	9 - 3	14 - 10	19 - 10	8 - 9	14 - 0	18 - 9
	DFL	No.2	10 - 3	16 - 6	20-0†	9 - 10	15 - 9	20-0†	9 - 5	15 - 1	20-0†	9 - 1	14 - 6	19 - 5	8 - 7	13 - 9	18 - 3
	DFL	No.3/Stud	9 - 4	14 - 1	18 - 1	8 - 9	13 - 1	16 - 11	8 - 2	12 - 4	15 - 10	-	11 - 7	14 - 11	-	10 - 7	13 - 8
	DFL	Standard	7 - 11	-	-	-	-	-	-	-	-	-	-	-	-	-	-
	HF	SS	10 - 3	16 - 6	20-0†	9 - 10	15 - 9	20-0†	9 - 5	15 - 1	20-0†	9 - 1	14 - 6	19 - 5	8 - 7	13 - 9	18 - 4
	HF	No.1	10 - 1	16 - 2	20-0†	9 - 7	15 - 5	20-0†	9 - 3	14 - 9	19 - 9	8 - 10	14 - 2	19 - 0	8 - 5	13 - 5	17 - 11
	HF	No.2	9 - 7	15 - 4	20-0†	9 - 2	14 - 8	19 - 7	8 - 9	14 - 1	18 - 9	8 - 5	13 - 6	18 - 1	8 - 0	12 - 9	17 - 1
	HF	No.3/Stud	9 - 1	13 - 8	17 - 8	8 - 6	12 - 9	16 - 6	8 - 0	12 - 0	15 - 5	-	11 - 3	14 - 6	-	10 - 4	13 - 4
	HF	Standard	-	-	-	-	-	-	-	-	-	-	-	-	-	-	-
	SP	SS	10 - 9	17 - 2	20-0†	10 - 3	16 - 5	20-0†	9 - 10	15 - 9	20-0†	9 - 5	15 - 2	20-0†	8 - 11	14 - 4	19 - 2
	SP	No.1	10 - 3	16 - 6	20-0†	9 - 10	15 - 9	20-0†	9 - 5	15 - 1	20-0†	9 - 1	14 - 6	19 - 5	8 - 7	13 - 9	18 - 4
	SP	No.2	9 - 10	15 - 9	20-0†	9 - 5	15 - 1	20-0†	9 - 0	14 - 5	19 - 3	8 - 8	13 - 10	18 - 4	8 - 2	13 - 0	16 - 10
	SP	No.3	8 - 5	12 - 10	16 - 5	7 - 11	12 - 0	15 - 4	-	11 - 3	14 - 4	-	10 - 7	13 - 6	-	9 - 8	12 - 5
	SP	Stud	8 - 5	12 - 10	16 - 5	7 - 11	12 - 0	15 - 4	-	11 - 3	14 - 4	-	10 - 7	13 - 6	-	9 - 8	12 - 5
	SP	Standard	-	-	-	-	-	-	-	-	-	-	-	-	-	-	-
	SPF	SS	10 - 1	16 - 2	20-0†	9 - 7	15 - 5	20-0†	9 - 3	14 - 9	19 - 9	8 - 10	14 - 2	19 - 0	8 - 5	13 - 5	17 - 11
	SPF	No.1	9 - 10	15 - 9	20-0†	9 - 5	15 - 1	20-0†	9 - 0	14 - 5	19 - 3	8 - 8	13 - 10	18 - 6	8 - 2	13 - 1	17 - 6
	SPF	No.2	9 - 10	15 - 9	20-0†	9 - 5	15 - 1	20-0†	9 - 0	14 - 5	19 - 3	8 - 8	13 - 10	18 - 6	8 - 2	13 - 1	17 - 6
	SPF	No.3/Stud	9 - 1	13 - 8	17 - 8	8 - 6	12 - 9	16 - 6	8 - 0	12 - 0	15 - 5	-	11 - 3	14 - 6	-	10 - 4	13 - 4
	SPF	Standard	-	-	-	-	-	-	-	-	-	-	-	-	-	-	-
24	DFL	SS	9 - 6	15 - 3	20-0†	9 - 1	14 - 6	19 - 5	8 - 8	13 - 11	18 - 7	8 - 4	13 - 5	17 - 11	7 - 11	12 - 8	16 - 11
	DFL	No.1	9 - 1	14 - 8	19 - 7	8 - 9	14 - 0	18 - 8	8 - 4	13 - 5	17 - 11	8 - 0	12 - 11	16 - 11	-	12 - 1	15 - 7
	DFL	No.2	8 - 11	14 - 4	19 - 2	8 - 6	13 - 8	18 - 2	8 - 2	13 - 2	17 - 0	7 - 10	12 - 5	16 - 0	-	11 - 5	14 - 8
	DFL	No.3/Stud	-	11 - 4	14 - 7	-	10 - 7	13 - 7	-	9 - 11	12 - 9	-	9 - 4	12 - 0	-	8 - 7	11 - 0
	DFL	Standard	-	-	-	-	-	-	-	-	-	-	-	-	-	-	-
	HF	SS	8 - 11	14 - 4	19 - 2	8 - 6	13 - 8	18 - 4	8 - 2	13 - 2	17 - 6	7 - 10	12 - 7	16 - 10	-	11 - 11	15 - 11
	HF	No.1	8 - 9	14 - 0	18 - 9	8 - 4	13 - 5	17 - 11	8 - 0	12 - 10	17 - 2	-	12 - 4	16 - 6	-	11 - 8	15 - 4
	HF	No.2	8 - 4	13 - 4	17 - 10	7 - 11	12 - 9	17 - 0	-	12 - 3	16 - 4	-	11 - 9	15 - 6	-	11 - 1	14 - 3
	HF	No.3/Stud	-	11 - 0	14 - 2	-	10 - 3	13 - 3	-	9 - 8	12 - 5	-	9 - 1	11 - 8	-	8 - 4	10 - 9
	HF	Standard	-	-	-	-	-	-	-	-	-	-	-	-	-	-	-
	SP	SS	9 - 4	14 - 11	19 - 11	8 - 11	14 - 3	19 - 1	8 - 6	13 - 8	18 - 3	8 - 2	13 - 2	17 - 7	7 - 9	12 - 5	16 - 7
	SP	No.1	8 - 11	14 - 4	19 - 2	8 - 6	13 - 8	18 - 4	8 - 2	13 - 2	17 - 6	7 - 10	12 - 7	16 - 10	-	11 - 11	15 - 11
	SP	No.2	8 - 6	13 - 8	17 - 11	8 - 2	13 - 0	16 - 9	7 - 10	12 - 2	15 - 8	-	11 - 5	14 - 9	-	10 - 6	13 - 6
	SP	No.3	-	10 - 4	13 - 3	-	9 - 8	12 - 4	-	9 - 0	11 - 7	-	8 - 6	10 - 10	-	7 - 10	10 - 0
	SP	Stud	-	10 - 4	13 - 3	-	9 - 8	12 - 4	-	9 - 0	11 - 7	-	8 - 6	10 - 10	-	7 - 10	10 - 0
	SP	Standard	-	-	-	-	-	-	-	-	-	-	-	-	-	-	-
	SPF	SS	8 - 9	14 - 0	18 - 9	8 - 4	13 - 5	17 - 11	8 - 0	12 - 10	17 - 2	-	12 - 4	16 - 6	-	11 - 8	15 - 7
	SPF	No.1	8 - 6	13 - 8	18 - 3	8 - 2	13 - 1	17 - 5	7 - 10	12 - 6	16 - 9	-	12 - 0	15 - 9	-	11 - 3	14 - 6
	SPF	No.2	8 - 6	13 - 8	18 - 3	8 - 2	13 - 1	17 - 5	7 - 10	12 - 6	16 - 9	-	12 - 0	15 - 9	-	11 - 3	14 - 6
	SPF	No.3/Stud	-	11 - 0	14 - 2	-	10 - 3	13 - 3	-	9 - 8	12 - 5	-	9 - 1	11 - 8	-	8 - 4	10 - 9
	SPF	Standard	-	-	-	-	-	-	-	-	-	-	-	-	-	-	-

See Table 3.20A footnotes.

Copyright © American Wood Council. Downloaded/printed pursuant to License Agreement. No reproduction or transfer authorized.

Table 3.20A2 Maximum Exterior Loadbearing[1] and Non-Loadbearing Stud Lengths for Common Lumber Species Resisting Interior Zone Wind Loads - Stud Deflection Limit = H/240

Exposure B H/240

(Fully Sheathed with a Minimum Sheathing Material)[a]

Wind Speed 3-second gust (mph) (See Figure 1.1)			90			95			100			105		
Stud Spacing (in.)	Species	Grade	2x4	2x6	2x8	2x4	2x6	2x8	2x4	2x6	2x8	2x4	2x6	2x8
			Maximum Allowable Stud Length (ft-in.)[1]											
12	DFL	SS	14-0††	20-0†	20-0†	14-0††	20-0†	20-0†	14-0††	20-0†	20-0†	14-0††	20-0†	20-0†
	DFL	No.1	14-0††	20-0†	20-0†	14-0††	20-0†	20-0†	13 - 11	20-0†	20-0†	13 - 6	20-0†	20-0†
	DFL	No.2	14-0††	20-0†	20-0†	14-0††	20-0†	20-0†	13 - 8	20-0†	20-0†	13 - 2	20-0†	20-0†
	DFL	No.3/Stud	13 - 6	20-0†	20-0†	13 - 6	20-0†	20-0†	13 - 0	20-0†	20-0†	12 - 7	20-0†	20-0†
	DFL	Standard	13 - 6	-	-	13 - 6	-	-	13 - 0	-	-	12 - 7	-	-
	HF	SS	14-0††	20-0†	20-0†	14-0††	20-0†	20-0†	13 - 8	20-0†	20-0†	13 - 2	20-0†	20-0†
	HF	No.1	13 - 10	20-0†	20-0†	13 - 10	20-0†	20-0†	13 - 4	20-0†	20-0†	12 - 11	20-0†	20-0†
	HF	No.2	13 - 2	20-0†	20-0†	13 - 2	20-0†	20-0†	12 - 8	20-0†	20-0†	12 - 3	19 - 8	20-0†
	HF	No.3/Stud	12 - 10	20-0†	20-0†	12 - 9	20-0†	20-0†	12 - 4	19 - 10	20-0†	11 - 11	19 - 2	20-0†
	HF	Standard	12 - 10	-	-	12 - 9	-	-	12 - 4	-	-	11 - 11	-	-
	SP	SS	14-0††	20-0†	20-0†	14-0††	20-0†	20-0†	14-0††	20-0†	20-0†	13 - 9	20-0†	20-0†
	SP	No.1	14-0††	20-0†	20-0†	14-0††	20-0†	20-0†	13 - 8	20-0†	20-0†	13 - 2	20-0†	20-0†
	SP	No.2	13 - 6	20-0†	20-0†	13 - 6	20-0†	20-0†	13 - 0	20-0†	20-0†	12 - 7	20-0†	20-0†
	SP	No.3	13 - 2	20-0†	20-0†	13 - 2	20-0†	20-0†	12 - 8	20-0†	20-0†	12 - 3	19 - 8	20-0†
	SP	Stud	13 - 2	20-0†	20-0†	13 - 2	20-0†	20-0†	12 - 8	20-0†	20-0†	12 - 3	19 - 8	20-0†
	SP	Standard	12 - 10	-	-	12 - 9	-	-	12 - 4	-	-	11 - 11	-	-
	SPF	SS	13 - 10	20-0†	20-0†	13 - 10	20-0†	20-0†	13 - 4	20-0†	20-0†	12 - 11	20-0†	20-0†
	SPF	No.1	13 - 6	20-0†	20-0†	13 - 6	20-0†	20-0†	13 - 0	20-0†	20-0†	12 - 7	20-0†	20-0†
	SPF	No.2	13 - 6	20-0†	20-0†	13 - 6	20-0†	20-0†	13 - 0	20-0†	20-0†	12 - 7	20-0†	20-0†
	SPF	No.3/Stud	12 - 10	20-0†	20-0†	12 - 9	20-0†	20-0†	12 - 4	19 - 10	20-0†	11 - 11	19 - 2	20-0†
	SPF	Standard	12 - 10	-	-	12 - 9	-	-	12 - 4	-	-	11 - 11	-	-
16	DFL	SS	13 - 7	20-0†	20-0†	13 - 7	20-0†	20-0†	13 - 1	20-0†	20-0†	12 - 8	20-0†	20-0†
	DFL	No.1	13 - 1	20-0†	20-0†	13 - 1	20-0†	20-0†	12 - 7	20-0†	20-0†	12 - 2	19 - 7	20-0†
	DFL	No.2	12 - 10	20-0†	20-0†	12 - 9	20-0†	20-0†	12 - 4	19 - 10	20-0†	11 - 11	19 - 2	20-0†
	DFL	No.3/Stud	12 - 4	19 - 4	20-0†	12 - 2	19 - 4	20-0†	11 - 9	18 - 11	20-0†	11 - 5	18 - 3	20-0†
	DFL	Standard	12 - 4	-	-	12 - 2	-	-	11 - 9	-	-	11 - 5	-	-
	HF	SS	12 - 10	20-0†	20-0†	12 - 9	20-0†	20-0†	12 - 4	19 - 10	20-0†	11 - 11	19 - 2	20-0†
	HF	No.1	12 - 7	19 - 9	20-0†	12 - 6	19 - 9	20-0†	12 - 1	19 - 5	20-0†	11 - 8	18 - 9	20-0†
	HF	No.2	12 - 0	18 - 10	20-0†	11 - 11	18 - 10	20-0†	11 - 6	18 - 5	20-0†	11 - 1	17 - 10	20-0†
	HF	No.3/Stud	11 - 8	18 - 4	20-0†	11 - 7	18 - 4	20-0†	11 - 2	17 - 11	20-0†	10 - 9	17 - 4	20-0†
	HF	Standard	11 - 8	-	-	11 - 7	-	-	11 - 2	-	-	10 - 9	-	-
	SP	SS	13 - 4	20-0†	20-0†	13 - 4	20-0†	20-0†	12 - 10	20-0†	20-0†	12 - 5	20 - 0	20-0†
	SP	No.1	12 - 10	20-0†	20-0†	12 - 9	20-0†	20-0†	12 - 4	19 - 10	20-0†	11 - 11	19 - 2	20-0†
	SP	No.2	12 - 4	19 - 4	20-0†	12 - 2	19 - 4	20-0†	11 - 9	18 - 11	20-0†	11 - 5	18 - 3	20-0†
	SP	No.3	12 - 0	18 - 10	20-0†	11 - 11	18 - 10	20-0†	11 - 6	18 - 5	20-0†	11 - 1	17 - 10	20-0†
	SP	Stud	12 - 0	18 - 10	20-0†	11 - 11	18 - 10	20-0†	11 - 6	18 - 5	20-0†	11 - 1	17 - 10	20-0†
	SP	Standard	11 - 8	-	-	11 - 7	-	-	11 - 0	-	-	10 - 5	-	-
	SPF	SS	12 - 7	19 - 9	20-0†	12 - 6	19 - 9	20-0†	12 - 1	19 - 5	20-0†	11 - 8	18 - 9	20-0†
	SPF	No.1	12 - 4	19 - 4	20-0†	12 - 2	19 - 4	20-0†	11 - 9	18 - 11	20-0†	11 - 5	18 - 3	20-0†
	SPF	No.2	12 - 4	19 - 4	20-0†	12 - 2	19 - 4	20-0†	11 - 9	18 - 11	20-0†	11 - 5	18 - 3	20-0†
	SPF	No.3/Stud	11 - 8	18 - 4	20-0†	11 - 7	18 - 4	20-0†	11 - 2	17 - 11	20-0†	10 - 9	17 - 4	20-0†
	SPF	Standard	11 - 8	-	-	11 - 7	-	-	11 - 2	-	-	10 - 9	-	-
24	DFL	SS	11 - 11	18 - 8	20-0†	11 - 9	18 - 8	20-0†	11 - 5	18 - 3	20-0†	11 - 0	17 - 8	20-0†
	DFL	No.1	11 - 6	18 - 0	20-0†	11 - 4	18 - 0	20-0†	10 - 11	17 - 7	20-0†	10 - 7	17 - 0	20-0†
	DFL	No.2	11 - 3	17 - 8	20-0†	11 - 1	17 - 8	20-0†	10 - 9	17 - 2	20-0†	10 - 4	16 - 7	20-0†
	DFL	No.3/Stud	10 - 9	16 - 11	20-0†	10 - 7	16 - 11	20-0†	10 - 3	16 - 5	20-0†	9 - 11	15 - 10	20-0†
	DFL	Standard	10 - 7	-	-	10 - 5	-	-	9 - 10	-	-	9 - 4	-	-
	HF	SS	11 - 3	17 - 8	20-0†	11 - 1	17 - 8	20-0†	10 - 9	17 - 2	20-0†	10 - 4	16 - 7	20-0†
	HF	No.1	11 - 0	17 - 3	20-0†	10 - 10	17 - 3	20-0†	10 - 6	16 - 10	20-0†	10 - 2	16 - 3	20-0†
	HF	No.2	10 - 6	16 - 6	20-0†	10 - 4	16 - 6	20-0†	10 - 0	16 - 0	20-0†	9 - 8	15 - 6	20-0†
	HF	No.3/Stud	10 - 2	16 - 0	20-0†	10 - 1	16 - 0	20-0†	9 - 8	15 - 7	20-0†	9 - 4	15 - 0	20-0†
	HF	Standard	10 - 2	-	-	10 - 1	-	-	9 - 7	-	-	9 - 1	-	-
	SP	SS	11 - 8	18 - 4	20-0†	11 - 7	18 - 4	20-0†	11 - 2	17 - 11	20-0†	10 - 9	17 - 4	20-0†
	SP	No.1	11 - 3	17 - 8	20-0†	11 - 1	17 - 8	20-0†	10 - 9	17 - 2	20-0†	10 - 4	16 - 7	20-0†
	SP	No.2	10 - 9	16 - 11	20-0†	10 - 7	16 - 11	20-0†	10 - 3	16 - 5	20-0†	9 - 11	15 - 10	20-0†
	SP	No.3	10 - 6	16 - 6	20-0†	10 - 4	16 - 6	20-0†	10 - 0	15 - 11	20-0†	9 - 8	15 - 2	19 - 5
	SP	Stud	10 - 6	16 - 6	20-0†	10 - 4	16 - 6	20-0†	10 - 0	15 - 11	20-0†	9 - 8	15 - 2	19 - 5
	SP	Standard	9 - 8	-	-	9 - 4	-	-	8 - 10	-	-	8 - 5	-	-
	SPF	SS	11 - 0	17 - 3	20-0†	10 - 10	17 - 3	20-0†	10 - 6	16 - 10	20-0†	10 - 2	16 - 3	20-0†
	SPF	No.1	10 - 9	16 - 11	20-0†	10 - 7	16 - 11	20-0†	10 - 3	16 - 5	20-0†	9 - 11	15 - 10	20-0†
	SPF	No.2	10 - 9	16 - 11	20-0†	10 - 7	16 - 11	20-0†	10 - 3	16 - 5	20-0†	9 - 11	15 - 10	20-0†
	SPF	No.3/Stud	10 - 2	16 - 0	20-0†	10 - 1	16 - 0	20-0†	9 - 8	15 - 7	20-0†	9 - 4	15 - 0	20-0†
	SPF	Standard	10 - 2	-	-	10 - 1	-	-	9 - 7	-	-	9 - 1	-	-

See Table 3.20A footnotes.

Copyright © American Wood Council. Downloaded/printed pursuant to License Agreement. No reproduction or transfer authorized.

Table 3.20A2 (Cont.) Maximum Exterior Loadbearing[1] and Non-Loadbearing Stud Lengths for Common Lumber Species Resisting Interior Zone Wind Loads - Stud Deflection Limit = H/240

Exposure B H/240

(Fully Sheathed with a Minimum Sheathing Material)[a]

Wind Speed 3-second gust (mph) (See Figure 1.1)			110			115			120			130			140		
Stud Spacing (in.)	Species	Grade	2x4	2x6	2x8	2x4	2x6	2x8	2x4	2x6	2x8	2x4	2x6	2x8	2x4	2x6	2x8
			Maximum Allowable Stud Length (ft-in.)[1]														
12	DFL	SS	13 - 7	20-0†	20-0†	13 - 2	20-0†	20-0†	12 - 9	20-0†	20-0†	12 - 1	19 - 4	20-0†	11 - 5	18 - 5	20-0†
	DFL	No.1	13 - 0	20-0†	20-0†	12 - 8	20-0†	20-0†	12 - 3	19 - 8	20-0†	11 - 7	18 - 8	20-0†	11 - 0	17 - 8	20-0†
	DFL	No.2	12 - 9	20-0†	20-0†	12 - 5	19 - 10	20-0†	12 - 0	19 - 3	20-0†	11 - 4	18 - 3	20-0†	10 - 9	17 - 4	20-0†
	DFL	No.3/Stud	12 - 2	19 - 7	20-0†	11 - 10	19 - 0	20-0†	11 - 6	18 - 5	20-0†	10 - 10	17 - 5	20-0†	10 - 4	16 - 6	20-0†
	DFL	Standard	12 - 2	-	-	11 - 10	-	-	11 - 6	-	-	10 - 9	-	-	9 - 11	-	-
	HF	SS	12 - 9	20-0†	20-0†	12 - 5	19 - 10	20-0†	12 - 0	19 - 3	20-0†	11 - 4	18 - 3	20-0†	10 - 9	17 - 4	20-0†
	HF	No.1	12 - 6	20-0†	20-0†	12 - 1	19 - 5	20-0†	11 - 9	18 - 10	20-0†	11 - 1	17 - 10	20-0†	10 - 7	16 - 11	20-0†
	HF	No.2	11 - 10	19 - 1	20-0†	11 - 6	18 - 6	20-0†	11 - 2	17 - 11	20-0†	10 - 7	17 - 0	20-0†	10 - 0	16 - 1	20-0†
	HF	No.3/Stud	11 - 7	18 - 6	20-0†	11 - 2	18 - 0	20-0†	10 - 10	17 - 5	20-0†	10 - 3	16 - 6	20-0†	9 - 9	15 - 8	20-0†
	HF	Standard	11 - 7	-	-	11 - 2	-	-	10 - 10	-	-	10 - 3	-	-	9 - 8	-	-
	SP	SS	13 - 4	20-0†	20-0†	12 - 11	20-0†	20-0†	12 - 6	20-0†	20-0†	11 - 10	19 - 0	20-0†	11 - 3	18 - 1	20-0†
	SP	No.1	12 - 9	20-0†	20-0†	12 - 5	19 - 10	20-0†	12 - 0	19 - 3	20-0†	11 - 4	18 - 3	20-0†	10 - 9	17 - 4	20-0†
	SP	No.2	12 - 2	19 - 7	20-0†	11 - 10	19 - 0	20-0†	11 - 6	18 - 5	20-0†	10 - 10	17 - 5	20-0†	10 - 4	16 - 6	20-0†
	SP	No.3	11 - 10	19 - 1	20-0†	11 - 6	18 - 6	20-0†	11 - 2	17 - 11	20-0†	10 - 7	17 - 0	20-0†	10 - 0	16 - 1	20-0†
	SP	Stud	11 - 10	19 - 1	20-0†	11 - 6	18 - 6	20-0†	11 - 2	17 - 11	20-0†	10 - 7	17 - 0	20-0†	10 - 0	16 - 1	20-0†
	SP	Standard	11 - 7	-	-	11 - 1	-	-	10 - 7	-	-	9 - 8	-	-	9 - 0	-	-
	SPF	SS	12 - 6	20-0†	20-0†	12 - 1	19 - 5	20-0†	11 - 9	18 - 10	20-0†	11 - 1	17 - 10	20-0†	10 - 7	16 - 11	20-0†
	SPF	No.1	12 - 2	19 - 7	20-0†	11 - 10	19 - 0	20-0†	11 - 6	18 - 5	20-0†	10 - 10	17 - 5	20-0†	10 - 4	16 - 6	20-0†
	SPF	No.2	12 - 2	19 - 7	20-0†	11 - 10	19 - 0	20-0†	11 - 6	18 - 5	20-0†	10 - 10	17 - 5	20-0†	10 - 4	16 - 6	20-0†
	SPF	No.3/Stud	11 - 7	18 - 6	20-0†	11 - 2	18 - 0	20-0†	10 - 10	17 - 5	20-0†	10 - 3	16 - 6	20-0†	9 - 9	15 - 8	20-0†
	SPF	Standard	11 - 7	-	-	11 - 2	-	-	10 - 10	-	-	10 - 3	-	-	9 - 8	-	-
16	DFL	SS	12 - 3	19 - 8	20-0†	11 - 11	19 - 1	20-0†	11 - 6	18 - 6	20-0†	10 - 11	17 - 6	20-0†	10 - 4	16 - 8	20-0†
	DFL	No.1	11 - 10	18 - 11	20-0†	11 - 5	18 - 4	20-0†	11 - 1	17 - 10	20-0†	10 - 6	16 - 10	20-0†	10 - 0	16 - 0	20-0†
	DFL	No.2	11 - 7	18 - 6	20-0†	11 - 2	18 - 0	20-0†	10 - 10	17 - 5	20-0†	10 - 3	16 - 6	20-0†	9 - 9	15 - 8	20-0†
	DFL	No.3/Stud	11 - 0	17 - 8	20-0†	10 - 8	17 - 2	20-0†	10 - 4	16 - 8	20-0†	9 - 10	15 - 9	20-0†	9 - 4	15 - 0	19 - 6
	DFL	Standard	11 - 0	-	-	10 - 6	-	-	10 - 0	-	-	9 - 3	-	-	8 - 6	-	-
	HF	SS	11 - 7	18 - 6	20-0†	11 - 2	18 - 0	20-0†	10 - 10	17 - 5	20-0†	10 - 3	16 - 6	20-0†	9 - 9	15 - 8	20-0†
	HF	No.1	11 - 3	18 - 2	20-0†	10 - 11	17 - 7	20-0†	10 - 8	17 - 1	20-0†	10 - 1	16 - 2	20-0†	9 - 7	15 - 4	20-0†
	HF	No.2	10 - 9	17 - 3	20-0†	10 - 5	16 - 9	20-0†	10 - 1	16 - 3	20-0†	9 - 7	15 - 4	20-0†	9 - 1	14 - 7	19 - 6
	HF	No.3/Stud	10 - 5	16 - 9	20-0†	10 - 2	16 - 3	20-0†	9 - 10	15 - 9	20-0†	9 - 4	14 - 11	19 - 11	8 - 10	14 - 2	18 - 11
	HF	Standard	10 - 5	-	-	10 - 2	-	-	9 - 10	-	-	9 - 0	-	-	8 - 4	-	-
	SP	SS	12 - 0	19 - 4	20-0†	11 - 8	18 - 9	20-0†	11 - 4	18 - 2	20-0†	10 - 9	17 - 2	20-0†	10 - 2	16 - 4	20-0†
	SP	No.1	11 - 7	18 - 6	20-0†	11 - 2	18 - 0	20-0†	10 - 10	17 - 5	20-0†	10 - 3	16 - 6	20-0†	9 - 9	15 - 8	20-0†
	SP	No.2	11 - 0	17 - 8	20-0†	10 - 8	17 - 2	20-0†	10 - 4	16 - 8	20-0†	9 - 10	15 - 9	20-0†	9 - 4	15 - 0	20 - 0
	SP	No.3	10 - 9	17 - 3	20-0†	10 - 5	16 - 9	20-0†	10 - 1	16 - 3	20-0†	9 - 7	15 - 0	19 - 2	9 - 1	13 - 10	17 - 8
	SP	Stud	10 - 9	17 - 3	20-0†	10 - 5	16 - 9	20-0†	10 - 1	16 - 3	20-0†	9 - 7	15 - 0	19 - 2	9 - 1	13 - 10	17 - 8
	SP	Standard	9 - 11	-	-	9 - 6	-	-	9 - 1	-	-	8 - 4	-	-	-	-	-
	SPF	SS	11 - 3	18 - 2	20-0†	10 - 11	17 - 7	20-0†	10 - 8	17 - 1	20-0†	10 - 1	16 - 2	20-0†	9 - 7	15 - 4	20-0†
	SPF	No.1	11 - 0	17 - 8	20-0†	10 - 8	17 - 2	20-0†	10 - 4	16 - 8	20-0†	9 - 10	15 - 9	20-0†	9 - 4	15 - 0	20 - 0
	SPF	No.2	11 - 0	17 - 8	20-0†	10 - 8	17 - 2	20-0†	10 - 4	16 - 8	20-0†	9 - 10	15 - 9	20-0†	9 - 4	15 - 0	20 - 0
	SPF	No.3/Stud	10 - 5	16 - 9	20-0†	10 - 2	16 - 3	20-0†	9 - 10	15 - 9	20-0†	9 - 4	14 - 11	19 - 11	8 - 10	14 - 2	18 - 11
	SPF	Standard	10 - 5	-	-	10 - 2	-	-	9 - 10	-	-	9 - 0	-	-	8 - 4	-	-
24	DFL	SS	10 - 8	17 - 1	20-0†	10 - 4	16 - 7	20-0†	10 - 0	16 - 1	20-0†	9 - 6	15 - 2	20-0†	9 - 0	14 - 5	19 - 3
	DFL	No.1	10 - 3	16 - 5	20-0†	9 - 11	15 - 11	20-0†	9 - 8	15 - 6	20-0†	9 - 1	14 - 7	19 - 6	8 - 8	13 - 11	18 - 7
	DFL	No.2	10 - 0	16 - 1	20-0†	9 - 9	15 - 7	20-0†	9 - 5	15 - 2	20-0†	8 - 11	14 - 4	19 - 2	8 - 6	13 - 7	18 - 2
	DFL	No.3/Stud	9 - 7	15 - 4	20-0†	9 - 3	14 - 11	19 - 5	9 - 0	14 - 4	18 - 6	8 - 6	13 - 2	17 - 0	8 - 1	12 - 2	15 - 8
	DFL	Standard	8 - 10	-	-	8 - 6	-	-	8 - 1	-	-	-	-	-	-	-	-
	HF	SS	10 - 0	16 - 1	20-0†	9 - 9	15 - 7	20-0†	9 - 5	15 - 2	20-0†	8 - 11	14 - 4	19 - 2	8 - 6	13 - 7	18 - 2
	HF	No.1	9 - 10	15 - 9	20-0†	9 - 6	15 - 3	20-0†	9 - 3	14 - 10	19 - 9	8 - 9	14 - 0	18 - 8	8 - 3	13 - 4	17 - 9
	HF	No.2	9 - 4	15 - 0	20 - 0	9 - 1	14 - 6	19 - 5	8 - 9	14 - 1	18 - 10	8 - 4	13 - 4	17 - 9	7 - 11	12 - 8	16 - 11
	HF	No.3/Stud	9 - 1	14 - 7	19 - 5	8 - 10	14 - 1	18 - 10	8 - 6	13 - 8	18 - 1	8 - 1	12 - 10	16 - 7	-	11 - 10	15 - 3
	HF	Standard	8 - 8	-	-	8 - 3	-	-	7 - 11	-	-	-	-	-	-	-	-
	SP	SS	10 - 5	16 - 9	20-0†	10 - 2	16 - 3	20-0†	9 - 10	15 - 9	20-0†	9 - 4	14 - 11	19 - 11	8 - 10	14 - 2	18 - 11
	SP	No.1	10 - 0	16 - 1	20-0†	9 - 9	15 - 7	20-0†	9 - 5	15 - 2	20-0†	8 - 11	14 - 4	19 - 2	8 - 6	13 - 7	18 - 2
	SP	No.2	9 - 7	15 - 4	20-0†	9 - 3	14 - 11	19 - 11	9 - 0	14 - 5	19 - 4	8 - 6	13 - 8	18 - 3	8 - 1	13 - 0	17 - 4
	SP	No.3	9 - 4	14 - 5	18 - 5	9 - 0	13 - 9	17 - 7	8 - 8	13 - 1	16 - 10	7 - 11	12 - 0	15 - 5	-	11 - 1	14 - 3
	SP	Stud	9 - 4	14 - 5	18 - 5	9 - 0	13 - 9	17 - 7	8 - 8	13 - 1	16 - 10	7 - 11	12 - 0	15 - 5	-	11 - 1	14 - 3
	SP	Standard	8 - 0	-	-	-	-	-	-	-	-	-	-	-	-	-	-
	SPF	SS	9 - 10	15 - 9	20-0†	9 - 6	15 - 3	20-0†	9 - 3	14 - 10	19 - 9	8 - 9	14 - 0	18 - 8	8 - 3	13 - 4	17 - 9
	SPF	No.1	9 - 7	15 - 4	20-0†	9 - 3	14 - 11	19 - 11	9 - 0	14 - 5	19 - 4	8 - 6	13 - 8	18 - 3	8 - 1	13 - 0	17 - 4
	SPF	No.2	9 - 7	15 - 4	20-0†	9 - 3	14 - 11	19 - 11	9 - 0	14 - 5	19 - 4	8 - 6	13 - 8	18 - 3	8 - 1	13 - 0	17 - 4
	SPF	No.3/Stud	9 - 1	14 - 7	19 - 5	8 - 10	14 - 1	18 - 10	8 - 6	13 - 8	18 - 1	8 - 1	12 - 10	16 - 7	-	11 - 10	15 - 3
	SPF	Standard	8 - 8	-	-	8 - 3	-	-	7 - 11	-	-	-	-	-	-	-	-

See Table 3.20A footnotes.

Copyright © American Wood Council. Downloaded/printed pursuant to License Agreement. No reproduction or transfer authorized.

Table 3.20A2 (Cont.) Maximum Exterior Loadbearing[1] and Non-Loadbearing Stud Lengths for Common Lumber Species Resisting Interior Zone Wind Loads - Stud Deflection Limit = H/240

Exposure B H/240

(Fully Sheathed with a Minimum Sheathing Material)[a]

Wind Speed 3-second gust (mph) (See Figure 1.1)			150			160			170			180			195		
Stud Spacing (in.)	Species	Grade	2x4	2x6	2x8	2x4	2x6	2x8	2x4	2x6	2x8	2x4	2x6	2x8	2x4	2x6	2x8
			Maximum Allowable Stud Length (ft-in.)[1]														
12	DFL	SS	10 - 11	17 - 6	20-0†	10 - 5	16 - 9	20-0†	10 - 0	16 - 1	20-0†	9 - 7	15 - 5	20-0†	9 - 1	14 - 7	19 - 6
	DFL	No.1	10 - 6	16 - 10	20-0†	10 - 0	16 - 1	20-0†	9 - 8	15 - 5	20-0†	9 - 3	14 - 10	19 - 10	8 - 9	14 - 0	18 - 9
	DFL	No.2	10 - 3	16 - 6	20-0†	9 - 10	15 - 9	20-0†	9 - 5	15 - 1	20-0†	9 - 1	14 - 6	19 - 5	8 - 7	13 - 9	18 - 4
	DFL	No.3/Stud	9 - 10	15 - 9	20-0†	9 - 5	15 - 1	19 - 9	9 - 0	14 - 4	18 - 6	8 - 8	13 - 6	17 - 5	8 - 2	12 - 5	16 - 0
	DFL	Standard	9 - 3	-	-	8 - 7	-	-	8 - 1	-	-	-	-	-	-	-	-
	HF	SS	10 - 3	16 - 6	20-0†	9 - 10	15 - 9	20-0†	9 - 5	15 - 1	20-0†	9 - 1	14 - 6	19 - 5	8 - 7	13 - 9	18 - 4
	HF	No.1	10 - 1	16 - 2	20-0†	9 - 7	15 - 5	20-0†	9 - 3	14 - 9	19 - 9	8 - 10	14 - 2	19 - 0	8 - 5	13 - 5	17 - 11
	HF	No.2	9 - 7	15 - 4	20-0†	9 - 2	14 - 8	19 - 7	8 - 9	14 - 1	18 - 9	8 - 5	13 - 6	18 - 1	8 - 0	12 - 9	17 - 1
	HF	No.3/Stud	9 - 4	14 - 11	19 - 11	8 - 11	14 - 3	19 - 1	8 - 6	13 - 8	18 - 0	8 - 2	13 - 2	16 - 11	7 - 9	12 - 1	15 - 7
	HF	Standard	9 - 0	-	-	8 - 5	-	-	7 - 11	-	-	-	-	-	-	-	-
	SP	SS	10 - 9	17 - 2	20-0†	10 - 3	16 - 5	20-0†	9 - 10	15 - 9	20-0†	9 - 5	15 - 2	20-0†	8 - 11	14 - 4	19 - 2
	SP	No.1	10 - 3	16 - 6	20-0†	9 - 10	15 - 9	20-0†	9 - 5	15 - 1	20-0†	9 - 1	14 - 6	19 - 5	8 - 7	13 - 9	18 - 4
	SP	No.2	9 - 10	15 - 9	20-0†	9 - 5	15 - 1	20-0†	9 - 0	14 - 5	19 - 3	8 - 8	13 - 10	18 - 6	8 - 2	13 - 1	17 - 6
	SP	No.3	9 - 7	15 - 0	19 - 2	9 - 2	14 - 0	17 - 11	8 - 7	13 - 1	16 - 9	8 - 1	12 - 4	15 - 9	-	11 - 4	14 - 6
	SP	Stud	9 - 7	15 - 0	19 - 2	9 - 2	14 - 0	17 - 11	8 - 7	13 - 1	16 - 9	8 - 1	12 - 4	15 - 9	-	11 - 4	14 - 6
	SP	Standard	8 - 4	-	-	7 - 9	-	-	-	-	-	-	-	-	-	-	-
	SPF	SS	10 - 1	16 - 2	20-0†	9 - 7	15 - 5	20-0†	9 - 3	14 - 9	19 - 9	8 - 10	14 - 2	19 - 0	8 - 5	13 - 5	17 - 11
	SPF	No.1	9 - 10	15 - 9	20-0†	9 - 5	15 - 1	20-0†	9 - 0	14 - 5	19 - 3	8 - 8	13 - 10	18 - 6	8 - 2	13 - 1	17 - 6
	SPF	No.2	9 - 10	15 - 9	20-0†	9 - 5	15 - 1	20-0†	9 - 0	14 - 5	19 - 3	8 - 8	13 - 10	18 - 6	8 - 2	13 - 1	17 - 6
	SPF	No.3/Stud	9 - 4	14 - 11	19 - 11	8 - 11	14 - 3	19 - 1	8 - 6	13 - 8	18 - 0	8 - 2	13 - 2	16 - 11	7 - 9	12 - 1	15 - 7
	SPF	Standard	9 - 0	-	-	8 - 5	-	-	7 - 11	-	-	-	-	-	-	-	-
16	DFL	SS	9 - 11	15 - 10	20-0†	9 - 5	15 - 2	20-0†	9 - 1	14 - 6	19 - 5	8 - 8	14 - 0	18 - 8	8 - 3	13 - 2	17 - 8
	DFL	No.1	9 - 6	15 - 3	20-0†	9 - 1	14 - 7	19 - 6	8 - 9	14 - 0	18 - 8	8 - 4	13 - 5	17 - 11	7 - 11	12 - 8	17 - 0
	DFL	No.2	9 - 4	14 - 11	19 - 11	8 - 11	14 - 3	19 - 1	8 - 6	13 - 8	18 - 3	8 - 2	13 - 2	17 - 7	7 - 9	12 - 5	16 - 7
	DFL	No.3/Stud	8 - 11	14 - 1	18 - 1	8 - 6	13 - 1	16 - 11	8 - 2	12 - 4	15 - 10	-	11 - 7	14 - 11	-	10 - 7	13 - 8
	DFL	Standard	7 - 11	-	-	-	-	-	-	-	-	-	-	-	-	-	-
	HF	SS	9 - 4	14 - 11	19 - 11	8 - 11	14 - 3	19 - 1	8 - 6	13 - 8	18 - 3	8 - 2	13 - 2	17 - 7	7 - 9	12 - 5	16 - 7
	HF	No.1	9 - 1	14 - 7	19 - 6	8 - 8	14 - 0	18 - 8	8 - 4	13 - 4	17 - 10	8 - 0	12 - 10	17 - 2	-	12 - 2	16 - 3
	HF	No.2	8 - 8	13 - 11	18 - 7	8 - 3	13 - 3	17 - 9	7 - 11	12 - 9	17 - 0	-	12 - 3	16 - 4	-	11 - 7	15 - 5
	HF	No.3/Stud	8 - 5	13 - 6	17 - 8	8 - 1	12 - 9	16 - 6	-	12 - 0	15 - 5	-	11 - 3	14 - 6	-	10 - 4	13 - 4
	HF	Standard	-	-	-	-	-	-	-	-	-	-	-	-	-	-	-
	SP	SS	9 - 8	15 - 7	20-0†	9 - 3	14 - 10	19 - 10	8 - 11	14 - 3	19 - 0	8 - 6	13 - 8	18 - 4	8 - 1	12 - 11	17 - 4
	SP	No.1	9 - 4	14 - 11	19 - 11	8 - 11	14 - 3	19 - 1	8 - 6	13 - 8	18 - 3	8 - 2	13 - 2	17 - 7	7 - 9	12 - 5	16 - 7
	SP	No.2	8 - 11	14 - 3	19 - 0	8 - 6	13 - 7	18 - 2	8 - 2	13 - 1	17 - 5	7 - 10	12 - 7	16 - 9	-	11 - 10	15 - 10
	SP	No.3	8 - 5	12 - 10	16 - 5	7 - 11	12 - 0	15 - 4	-	11 - 3	14 - 4	-	10 - 7	13 - 6	-	9 - 8	12 - 5
	SP	Stud	8 - 5	12 - 10	16 - 5	7 - 11	12 - 0	15 - 4	-	11 - 3	14 - 4	-	10 - 7	13 - 6	-	9 - 8	12 - 5
	SP	Standard	-	-	-	-	-	-	-	-	-	-	-	-	-	-	-
	SPF	SS	9 - 1	14 - 7	19 - 6	8 - 8	14 - 0	18 - 8	8 - 4	13 - 4	17 - 10	8 - 0	12 - 10	17 - 2	-	12 - 2	16 - 3
	SPF	No.1	8 - 11	14 - 3	19 - 0	8 - 6	13 - 7	18 - 2	8 - 2	13 - 1	17 - 5	7 - 10	12 - 7	16 - 9	-	11 - 10	15 - 10
	SPF	No.2	8 - 11	14 - 3	19 - 0	8 - 6	13 - 7	18 - 2	8 - 2	13 - 1	17 - 5	7 - 10	12 - 7	16 - 9	-	11 - 10	15 - 10
	SPF	No.3/Stud	8 - 5	13 - 6	17 - 8	8 - 1	12 - 9	16 - 6	-	12 - 0	15 - 5	-	11 - 3	14 - 6	-	10 - 4	13 - 4
	SPF	Standard	-	-	-	-	-	-	-	-	-	-	-	-	-	-	-
24	DFL	SS	8 - 7	13 - 9	18 - 5	8 - 2	13 - 2	17 - 7	7 - 10	12 - 7	16 - 10	-	12 - 1	16 - 2	-	11 - 5	15 - 4
	DFL	No.1	8 - 3	13 - 3	17 - 8	7 - 11	12 - 8	16 - 11	-	12 - 2	16 - 2	-	11 - 8	15 - 7	-	11 - 0	14 - 9
	DFL	No.2	8 - 1	13 - 0	17 - 4	-	12 - 5	16 - 7	-	11 - 10	15 - 10	-	11 - 5	15 - 3	-	10 - 9	14 - 5
	DFL	No.3/Stud	-	11 - 4	14 - 7	-	10 - 7	13 - 7	-	9 - 11	12 - 9	-	9 - 4	12 - 0	-	8 - 7	11 - 0
	DFL	Standard	-	-	-	-	-	-	-	-	-	-	-	-	-	-	-
	HF	SS	8 - 1	13 - 0	17 - 4	-	12 - 5	16 - 7	-	11 - 10	15 - 10	-	11 - 5	15 - 3	-	10 - 9	14 - 5
	HF	No.1	7 - 11	12 - 8	16 - 11	-	12 - 1	16 - 2	-	11 - 7	15 - 6	-	11 - 2	14 - 11	-	10 - 7	14 - 1
	HF	No.2	-	12 - 1	16 - 1	-	11 - 6	15 - 5	-	11 - 1	14 - 9	-	10 - 7	14 - 2	-	10 - 0	13 - 5
	HF	No.3/Stud	-	11 - 0	14 - 2	-	10 - 3	13 - 3	-	9 - 8	12 - 5	-	9 - 1	11 - 8	-	8 - 4	10 - 9
	HF	Standard	-	-	-	-	-	-	-	-	-	-	-	-	-	-	-
	SP	SS	8 - 5	13 - 6	18 - 0	8 - 1	12 - 11	17 - 3	-	12 - 4	16 - 6	-	11 - 11	15 - 11	-	11 - 3	15 - 0
	SP	No.1	8 - 1	13 - 0	17 - 4	-	12 - 5	16 - 7	-	11 - 10	15 - 10	-	11 - 5	15 - 3	-	10 - 9	14 - 5
	SP	No.2	-	12 - 4	16 - 6	-	11 - 10	15 - 9	-	11 - 4	15 - 2	-	10 - 11	14 - 7	-	10 - 4	13 - 6
	SP	No.3	-	10 - 4	13 - 3	-	9 - 8	12 - 4	-	9 - 0	11 - 7	-	8 - 6	10 - 10	-	7 - 10	10 - 0
	SP	Stud	-	10 - 4	13 - 3	-	9 - 8	12 - 4	-	9 - 0	11 - 7	-	8 - 6	10 - 10	-	7 - 10	10 - 0
	SP	Standard	-	-	-	-	-	-	-	-	-	-	-	-	-	-	-
	SPF	SS	7 - 11	12 - 8	16 - 11	-	12 - 1	16 - 2	-	11 - 7	15 - 6	-	11 - 2	14 - 11	-	10 - 7	14 - 1
	SPF	No.1	-	12 - 4	16 - 6	-	11 - 10	15 - 9	-	11 - 4	15 - 2	-	10 - 11	14 - 7	-	10 - 4	13 - 9
	SPF	No.2	-	12 - 4	16 - 6	-	11 - 10	15 - 9	-	11 - 4	15 - 2	-	10 - 11	14 - 7	-	10 - 4	13 - 9
	SPF	No.3/Stud	-	11 - 0	14 - 2	-	10 - 3	13 - 3	-	9 - 8	12 - 5	-	9 - 1	11 - 8	-	8 - 4	10 - 9
	SPF	Standard	-	-	-	-	-	-	-	-	-	-	-	-	-	-	-

See Table 3.20A footnotes.

Copyright © American Wood Council. Downloaded/printed pursuant to License Agreement. No reproduction or transfer authorized.

Table 3.20A3 Maximum Exterior Loadbearing[1] and Non-Loadbearing Stud Lengths for Common Lumber Species Resisting Interior Zone Wind Loads - Stud Deflection Limit = H/360

Exposure B H/360

(Fully Sheathed with a Minimum Sheathing Material)[a]

Wind Speed 3-second gust (mph) (See Figure 1.1)			90			95			100			105		
Stud Spacing (in.)	Species	Grade	2x4	2x6	2x8	2x4	2x6	2x8	2x4	2x6	2x8	2x4	2x6	2x8
			Maximum Allowable Stud Length (ft-in.)[1]											
12	DFL	SS	13 - 1	20-0†	20-0†	13 - 0	20-0†	20-0†	12 - 7	20-0†	20-0†	12 - 2	19 - 6	20-0†
	DFL	No.1	12 - 7	19 - 10	20-0†	12 - 6	19 - 10	20-0†	12 - 1	19 - 5	20-0†	11 - 8	18 - 9	20-0†
	DFL	No.2	12 - 4	19 - 5	20-0†	12 - 3	19 - 5	20-0†	11 - 10	19 - 0	20-0†	11 - 5	18 - 5	20-0†
	DFL	No.3/Stud	11 - 10	18 - 7	20-0†	11 - 9	18 - 7	20-0†	11 - 4	18 - 2	20-0†	10 - 11	17 - 7	20-0†
	DFL	Standard	11 - 10	-	-	11 - 9	-	-	11 - 4	-	-	10 - 11	-	-
	HF	SS	12 - 4	19 - 5	20-0†	12 - 3	19 - 5	20-0†	11 - 10	19 - 0	20-0†	11 - 5	18 - 5	20-0†
	HF	No.1	12 - 1	19 - 0	20-0†	12 - 0	19 - 0	20-0†	11 - 7	18 - 7	20-0†	11 - 2	18 - 0	20-0†
	HF	No.2	11 - 6	18 - 2	20-0†	11 - 5	18 - 2	20-0†	11 - 0	17 - 8	20-0†	10 - 8	17 - 1	20-0†
	HF	No.3/Stud	11 - 3	17 - 8	20-0†	11 - 1	17 - 8	20-0†	10 - 9	17 - 2	20-0†	10 - 4	16 - 7	20-0†
	HF	Standard	11 - 3	-	-	11 - 1	-	-	10 - 9	-	-	10 - 4	-	-
	SP	SS	12 - 10	20-0†	20-0†	12 - 9	20-0†	20-0†	12 - 4	19 - 10	20-0†	11 - 11	19 - 2	20-0†
	SP	No.1	12 - 4	19 - 5	20-0†	12 - 3	19 - 5	20-0†	11 - 10	19 - 0	20-0†	11 - 5	18 - 5	20-0†
	SP	No.2	11 - 10	18 - 7	20-0†	11 - 9	18 - 7	20-0†	11 - 4	18 - 2	20-0†	10 - 11	17 - 7	20-0†
	SP	No.3	11 - 6	18 - 2	20-0†	11 - 5	18 - 2	20-0†	11 - 0	17 - 8	20-0†	10 - 8	17 - 1	20-0†
	SP	Stud	11 - 6	18 - 2	20-0†	11 - 5	18 - 2	20-0†	11 - 0	17 - 8	20-0†	10 - 8	17 - 1	20-0†
	SP	Standard	11 - 3	-	-	11 - 1	-	-	10 - 9	-	-	10 - 4	-	-
	SPF	SS	12 - 1	19 - 0	20-0†	12 - 0	19 - 0	20-0†	11 - 7	18 - 7	20-0†	11 - 2	18 - 0	20-0†
	SPF	No.1	11 - 10	18 - 7	20-0†	11 - 9	18 - 7	20-0†	11 - 4	18 - 2	20-0†	10 - 11	17 - 7	20-0†
	SPF	No.2	11 - 10	18 - 7	20-0†	11 - 9	18 - 7	20-0†	11 - 4	18 - 2	20-0†	10 - 11	17 - 7	20-0†
	SPF	No.3/Stud	11 - 3	17 - 8	20-0†	11 - 1	17 - 8	20-0†	10 - 9	17 - 2	20-0†	10 - 4	16 - 7	20-0†
	SPF	Standard	11 - 3	-	-	11 - 1	-	-	10 - 9	-	-	10 - 4	-	-
16	DFL	SS	11 - 11	18 - 8	20-0†	11 - 9	18 - 8	20-0†	11 - 5	18 - 3	20-0†	11 - 0	17 - 8	20-0†
	DFL	No.1	11 - 6	18 - 0	20-0†	11 - 4	18 - 0	20-0†	10 - 11	17 - 7	20-0†	10 - 7	17 - 0	20-0†
	DFL	No.2	11 - 3	17 - 8	20-0†	11 - 1	17 - 8	20-0†	10 - 9	17 - 2	20-0†	10 - 4	16 - 7	20-0†
	DFL	No.3/Stud	10 - 9	16 - 11	20-0†	10 - 7	16 - 11	20-0†	10 - 3	16 - 5	20-0†	9 - 11	15 - 10	20-0†
	DFL	Standard	10 - 9	-	-	10 - 7	-	-	10 - 3	-	-	9 - 11	-	-
	HF	SS	11 - 3	17 - 8	20-0†	11 - 1	17 - 8	20-0†	10 - 9	17 - 2	20-0†	10 - 4	16 - 7	20-0†
	HF	No.1	11 - 0	17 - 3	20-0†	10 - 10	17 - 3	20-0†	10 - 6	16 - 10	20-0†	10 - 2	16 - 3	20-0†
	HF	No.2	10 - 6	16 - 6	20-0†	10 - 4	16 - 6	20-0†	10 - 0	16 - 0	20-0†	9 - 8	15 - 6	20-0†
	HF	No.3/Stud	10 - 2	16 - 0	20-0†	10 - 1	16 - 0	20-0†	9 - 8	15 - 7	20-0†	9 - 4	15 - 0	20-0†
	HF	Standard	10 - 2	-	-	10 - 1	-	-	9 - 8	-	-	9 - 4	-	-
	SP	SS	11 - 8	18 - 4	20-0†	11 - 7	18 - 4	20-0†	11 - 2	17 - 11	20-0†	10 - 9	17 - 4	20-0†
	SP	No.1	11 - 3	17 - 8	20-0†	11 - 1	17 - 8	20-0†	10 - 9	17 - 2	20-0†	10 - 4	16 - 7	20-0†
	SP	No.2	10 - 9	16 - 11	20-0†	10 - 7	16 - 11	20-0†	10 - 3	16 - 5	20-0†	9 - 11	15 - 10	20-0†
	SP	No.3	10 - 6	16 - 6	20-0†	10 - 4	16 - 6	20-0†	10 - 0	16 - 0	20-0†	9 - 8	15 - 6	20-0†
	SP	Stud	10 - 6	16 - 6	20-0†	10 - 4	16 - 6	20-0†	10 - 0	16 - 0	20-0†	9 - 8	15 - 6	20-0†
	SP	Standard	10 - 2	-	-	10 - 1	-	-	9 - 8	-	-	9 - 4	-	-
	SPF	SS	11 - 0	17 - 3	20-0†	10 - 10	17 - 3	20-0†	10 - 6	16 - 10	20-0†	10 - 2	16 - 3	20-0†
	SPF	No.1	10 - 9	16 - 11	20-0†	10 - 7	16 - 11	20-0†	10 - 3	16 - 5	20-0†	9 - 11	15 - 10	20-0†
	SPF	No.2	10 - 9	16 - 11	20-0†	10 - 7	16 - 11	20-0†	10 - 3	16 - 5	20-0†	9 - 11	15 - 10	20-0†
	SPF	No.3/Stud	10 - 2	16 - 0	20-0†	10 - 1	16 - 0	20-0†	9 - 8	15 - 7	20-0†	9 - 4	15 - 0	20-0†
	SPF	Standard	10 - 2	-	-	10 - 1	-	-	9 - 8	-	-	9 - 4	-	-
24	DFL	SS	10 - 5	16 - 4	20-0†	10 - 3	16 - 4	20-0†	9 - 11	15 - 10	20-0†	9 - 7	15 - 4	20-0†
	DFL	No.1	10 - 0	15 - 9	20-0†	9 - 10	15 - 9	20-0†	9 - 6	15 - 3	20-0†	9 - 2	14 - 9	19 - 8
	DFL	No.2	9 - 10	15 - 5	20-0†	9 - 8	15 - 5	20-0†	9 - 4	14 - 11	19 - 11	9 - 0	14 - 5	19 - 3
	DFL	No.3/Stud	9 - 5	14 - 9	19 - 5	9 - 2	14 - 9	19 - 5	8 - 11	14 - 3	19 - 0	8 - 7	13 - 9	18 - 5
	DFL	Standard	9 - 5	-	-	9 - 2	-	-	8 - 11	-	-	8 - 7	-	-
	HF	SS	9 - 10	15 - 5	20-0†	9 - 8	15 - 5	20-0†	9 - 4	14 - 11	19 - 11	9 - 0	14 - 5	19 - 3
	HF	No.1	9 - 7	15 - 1	19 - 11	9 - 5	15 - 1	19 - 11	9 - 1	14 - 7	19 - 6	8 - 10	14 - 1	18 - 10
	HF	No.2	9 - 2	14 - 5	19 - 0	9 - 0	14 - 5	19 - 0	8 - 8	13 - 11	18 - 7	8 - 4	13 - 5	17 - 11
	HF	No.3/Stud	8 - 11	14 - 0	18 - 6	8 - 9	14 - 0	18 - 6	8 - 5	13 - 6	18 - 0	8 - 2	13 - 1	17 - 5
	HF	Standard	8 - 11	-	-	8 - 9	-	-	8 - 5	-	-	8 - 2	-	-
	SP	SS	10 - 2	16 - 0	20-0†	10 - 1	16 - 0	20-0†	9 - 8	15 - 7	20-0†	9 - 4	15 - 0	20-0†
	SP	No.1	9 - 10	15 - 5	20-0†	9 - 8	15 - 5	20-0†	9 - 4	14 - 11	19 - 11	9 - 0	14 - 5	19 - 3
	SP	No.2	9 - 5	14 - 9	19 - 5	9 - 2	14 - 9	19 - 5	8 - 11	14 - 3	19 - 0	8 - 7	13 - 9	18 - 5
	SP	No.3	9 - 2	14 - 5	19 - 0	9 - 0	14 - 5	19 - 0	8 - 8	13 - 11	18 - 7	8 - 4	13 - 5	17 - 11
	SP	Stud	9 - 2	14 - 5	19 - 0	9 - 0	14 - 5	19 - 0	8 - 8	13 - 11	18 - 7	8 - 4	13 - 5	17 - 11
	SP	Standard	8 - 11	-	-	8 - 9	-	-	8 - 5	-	-	8 - 2	-	-
	SPF	SS	9 - 7	15 - 1	19 - 11	9 - 5	15 - 1	19 - 11	9 - 1	14 - 7	19 - 6	8 - 10	14 - 1	18 - 10
	SPF	No.1	9 - 5	14 - 9	19 - 5	9 - 2	14 - 9	19 - 5	8 - 11	14 - 3	19 - 0	8 - 7	13 - 9	18 - 5
	SPF	No.2	9 - 5	14 - 9	19 - 5	9 - 2	14 - 9	19 - 5	8 - 11	14 - 3	19 - 0	8 - 7	13 - 9	18 - 5
	SPF	No.3/Stud	8 - 11	14 - 0	18 - 6	8 - 9	14 - 0	18 - 6	8 - 5	13 - 6	18 - 0	8 - 2	13 - 1	17 - 5
	SPF	Standard	8 - 11	-	-	8 - 9	-	-	8 - 5	-	-	8 - 2	-	-

See Table 3.20A footnotes.

Copyright © American Wood Council. Downloaded/printed pursuant to License Agreement. No reproduction or transfer authorized.

Table 3.20A3 (Cont.) **Maximum Exterior Loadbearing[1] and Non-Loadbearing Stud Lengths for Common Lumber Species Resisting Interior Zone Wind Loads - Stud Deflection Limit = H/360**

(Fully Sheathed with a Minimum Sheathing Material)[a]

Exposure B H/360

Wind Speed 3-second gust (mph) (See Figure 1.1)			110			115			120			130			140		
Stud Spacing (in.)	Species	Grade	2x4	2x6	2x8	2x4	2x6	2x8	2x4	2x6	2x8	2x4	2x6	2x8	2x4	2x6	2x8
			Maximum Allowable Stud Length (ft-in.)[1]														
12	DFL	SS	11 - 9	18 - 11	20-0†	11 - 5	18 - 4	20-0†	11 - 1	17 - 9	20-0†	10 - 6	16 - 10	20-0†	9 - 11	16 - 0	20-0†
	DFL	No.1	11 - 4	18 - 2	20-0†	11 - 0	17 - 7	20-0†	10 - 8	17 - 1	20-0†	10 - 1	16 - 2	20-0†	9 - 7	15 - 4	20-0†
	DFL	No.2	11 - 1	17 - 10	20-0†	10 - 9	17 - 3	20-0†	10 - 5	16 - 9	20-0†	9 - 10	15 - 10	20-0†	9 - 4	15 - 0	20-0†
	DFL	No.3/Stud	10 - 7	17 - 0	20-0†	10 - 3	16 - 6	20-0†	10 - 0	16 - 0	20-0†	9 - 5	15 - 1	20-0†	8 - 11	14 - 4	19 - 2
	DFL	Standard	10 - 7	-	-	10 - 3	-	-	10 - 0	-	-	9 - 5	-	-	8 - 11	-	-
	HF	SS	11 - 1	17 - 10	20-0†	10 - 9	17 - 3	20-0†	10 - 5	16 - 9	20-0†	9 - 10	15 - 10	20-0†	9 - 4	15 - 0	20-0†
	HF	No.1	10 - 10	17 - 5	20-0†	10 - 6	16 - 10	20-0†	10 - 2	16 - 4	20-0†	9 - 8	15 - 6	20-0†	9 - 2	14 - 8	19 - 8
	HF	No.2	10 - 4	16 - 7	20-0†	10 - 0	16 - 0	20-0†	9 - 8	15 - 7	20-0†	9 - 2	14 - 9	19 - 8	8 - 9	14 - 0	18 - 8
	HF	No.3/Stud	10 - 0	16 - 1	20-0†	9 - 9	15 - 7	20-0†	9 - 5	15 - 2	20-0†	8 - 11	14 - 4	19 - 2	8 - 6	13 - 7	18 - 2
	HF	Standard	10 - 0	-	-	9 - 9	-	-	9 - 5	-	-	8 - 11	-	-	8 - 6	-	-
	SP	SS	11 - 7	18 - 6	20-0†	11 - 2	18 - 0	20-0†	10 - 10	17 - 5	20-0†	10 - 3	16 - 6	20-0†	9 - 9	15 - 8	20-0†
	SP	No.1	11 - 1	17 - 10	20-0†	10 - 9	17 - 3	20-0†	10 - 5	16 - 9	20-0†	9 - 10	15 - 10	20-0†	9 - 4	15 - 0	20-0†
	SP	No.2	10 - 7	17 - 0	20-0†	10 - 3	16 - 6	20-0†	10 - 0	16 - 0	20-0†	9 - 5	15 - 1	20-0†	8 - 11	14 - 4	19 - 2
	SP	No.3	10 - 4	16 - 7	20-0†	10 - 0	16 - 0	20-0†	9 - 8	15 - 7	20-0†	9 - 2	14 - 9	19 - 8	8 - 9	14 - 0	18 - 8
	SP	Stud	10 - 4	16 - 7	20-0†	10 - 0	16 - 0	20-0†	9 - 8	15 - 7	20-0†	9 - 2	14 - 9	19 - 8	8 - 9	14 - 0	18 - 8
	SP	Standard	10 - 0	-	-	9 - 9	-	-	9 - 5	-	-	8 - 11	-	-	8 - 6	-	-
	SPF	SS	10 - 10	17 - 5	20-0†	10 - 6	16 - 10	20-0†	10 - 2	16 - 4	20-0†	9 - 8	15 - 6	20-0†	9 - 2	14 - 8	19 - 8
	SPF	No.1	10 - 7	17 - 0	20-0†	10 - 3	16 - 6	20-0†	10 - 0	16 - 0	20-0†	9 - 5	15 - 1	20-0†	8 - 11	14 - 4	19 - 2
	SPF	No.2	10 - 7	17 - 0	20-0†	10 - 3	16 - 6	20-0†	10 - 0	16 - 0	20-0†	9 - 5	15 - 1	20-0†	8 - 11	14 - 4	19 - 2
	SPF	No.3/Stud	10 - 0	16 - 1	20-0†	9 - 9	15 - 7	20-0†	9 - 5	15 - 2	20-0†	8 - 11	14 - 4	19 - 2	8 - 6	13 - 7	18 - 2
	SPF	Standard	10 - 0	-	-	9 - 9	-	-	9 - 5	-	-	8 - 11	-	-	8 - 6	-	-
16	DFL	SS	10 - 8	17 - 1	20-0†	10 - 4	16 - 7	20-0†	10 - 0	16 - 1	20-0†	9 - 6	15 - 2	20-0†	9 - 0	14 - 5	19 - 3
	DFL	No.1	10 - 3	16 - 5	20-0†	9 - 11	15 - 11	20-0†	9 - 8	15 - 6	20-0†	9 - 1	14 - 7	19 - 6	8 - 8	13 - 11	18 - 7
	DFL	No.2	10 - 0	16 - 1	20-0†	9 - 9	15 - 7	20-0†	9 - 5	15 - 2	20-0†	8 - 11	14 - 4	19 - 2	8 - 6	13 - 7	18 - 2
	DFL	No.3/Stud	9 - 7	15 - 4	20-0†	9 - 3	14 - 11	19 - 11	9 - 0	14 - 5	19 - 4	8 - 6	13 - 8	18 - 3	8 - 1	13 - 0	17 - 4
	DFL	Standard	9 - 7	-	-	9 - 3	-	-	9 - 0	-	-	8 - 6	-	-	8 - 1	-	-
	HF	SS	10 - 0	16 - 1	20-0†	9 - 9	15 - 7	20-0†	9 - 5	15 - 2	20-0†	8 - 11	14 - 4	19 - 2	8 - 6	13 - 7	18 - 2
	HF	No.1	9 - 10	15 - 9	20-0†	9 - 6	15 - 3	20-0†	9 - 3	14 - 10	19 - 9	8 - 9	14 - 0	18 - 8	8 - 3	13 - 4	17 - 9
	HF	No.2	9 - 4	15 - 0	20 - 0	9 - 1	14 - 6	19 - 5	8 - 9	14 - 1	18 - 10	8 - 4	13 - 4	17 - 9	7 - 11	12 - 8	16 - 11
	HF	No.3/Stud	9 - 1	14 - 7	19 - 5	8 - 10	14 - 1	18 - 10	8 - 6	13 - 8	18 - 4	8 - 1	12 - 11	17 - 4	-	12 - 4	16 - 5
	HF	Standard	9 - 1	-	-	8 - 10	-	-	8 - 6	-	-	8 - 1	-	-	-	-	-
	SP	SS	10 - 5	16 - 9	20-0†	10 - 2	16 - 3	20-0†	9 - 10	15 - 9	20-0†	9 - 4	14 - 11	19 - 11	8 - 10	14 - 2	18 - 11
	SP	No.1	10 - 0	16 - 1	20-0†	9 - 9	15 - 7	20-0†	9 - 5	15 - 2	20-0†	8 - 11	14 - 4	19 - 2	8 - 6	13 - 7	18 - 2
	SP	No.2	9 - 7	15 - 4	20-0†	9 - 3	14 - 11	19 - 11	9 - 0	14 - 5	19 - 4	8 - 6	13 - 8	18 - 3	8 - 1	13 - 0	17 - 4
	SP	No.3	9 - 4	15 - 0	20 - 0	9 - 1	14 - 6	19 - 5	8 - 9	14 - 1	18 - 10	8 - 4	13 - 4	17 - 9	7 - 11	12 - 8	16 - 11
	SP	Stud	9 - 4	15 - 0	20 - 0	9 - 1	14 - 6	19 - 5	8 - 9	14 - 1	18 - 10	8 - 4	13 - 4	17 - 9	7 - 11	12 - 8	16 - 11
	SP	Standard	9 - 1	-	-	8 - 10	-	-	8 - 6	-	-	8 - 1	-	-	-	-	-
	SPF	SS	9 - 10	15 - 9	20-0†	9 - 6	15 - 3	20-0†	9 - 3	14 - 10	19 - 9	8 - 9	14 - 0	18 - 8	8 - 3	13 - 4	17 - 9
	SPF	No.1	9 - 7	15 - 4	20-0†	9 - 3	14 - 11	19 - 11	9 - 0	14 - 5	19 - 4	8 - 6	13 - 8	18 - 3	8 - 1	13 - 0	17 - 4
	SPF	No.2	9 - 7	15 - 4	20-0†	9 - 3	14 - 11	19 - 11	9 - 0	14 - 5	19 - 4	8 - 6	13 - 8	18 - 3	8 - 1	13 - 0	17 - 4
	SPF	No.3/Stud	9 - 1	14 - 7	19 - 5	8 - 10	14 - 1	18 - 10	8 - 6	13 - 8	18 - 4	8 - 1	12 - 11	17 - 4	-	12 - 4	16 - 5
	SPF	Standard	9 - 1	-	-	8 - 10	-	-	8 - 6	-	-	8 - 1	-	-	-	-	-
24	DFL	SS	9 - 3	14 - 10	19 - 10	9 - 0	14 - 5	19 - 2	8 - 8	14 - 0	18 - 8	8 - 3	13 - 2	17 - 8	7 - 10	12 - 6	16 - 9
	DFL	No.1	8 - 11	14 - 3	19 - 1	8 - 7	13 - 10	18 - 6	8 - 4	13 - 5	17 - 11	7 - 11	12 - 8	17 - 0	-	12 - 1	16 - 1
	DFL	No.2	8 - 8	14 - 0	18 - 8	8 - 5	13 - 6	18 - 1	8 - 2	13 - 2	17 - 7	7 - 9	12 - 5	16 - 7	-	11 - 10	15 - 9
	DFL	No.3/Stud	8 - 4	13 - 4	17 - 10	8 - 1	12 - 11	17 - 3	7 - 10	12 - 7	16 - 9	-	11 - 10	15 - 10	-	11 - 3	15 - 1
	DFL	Standard	8 - 4	-	-	8 - 1	-	-	7 - 10	-	-	-	-	-	-	-	-
	HF	SS	8 - 8	14 - 0	18 - 8	8 - 5	13 - 6	18 - 1	8 - 2	13 - 2	17 - 7	7 - 9	12 - 5	16 - 7	-	11 - 10	15 - 9
	HF	No.1	8 - 6	13 - 8	18 - 3	8 - 3	13 - 3	17 - 8	8 - 0	12 - 10	17 - 2	-	12 - 2	16 - 3	-	11 - 6	15 - 5
	HF	No.2	8 - 1	13 - 0	17 - 4	7 - 10	12 - 7	16 - 10	-	12 - 3	16 - 4	-	11 - 7	15 - 5	-	11 - 0	14 - 8
	HF	No.3/Stud	7 - 11	12 - 8	16 - 10	-	12 - 3	16 - 4	-	11 - 11	15 - 11	-	11 - 3	15 - 0	-	10 - 8	14 - 3
	HF	Standard	7 - 11	-	-	-	-	-	-	-	-	-	-	-	-	-	-
	SP	SS	9 - 1	14 - 7	19 - 5	8 - 10	14 - 1	18 - 10	8 - 6	13 - 8	18 - 4	8 - 1	12 - 11	17 - 4	-	12 - 4	16 - 5
	SP	No.1	8 - 8	14 - 0	18 - 8	8 - 5	13 - 6	18 - 1	8 - 2	13 - 2	17 - 7	7 - 9	12 - 5	16 - 7	-	11 - 10	15 - 9
	SP	No.2	8 - 4	13 - 4	17 - 10	8 - 1	12 - 11	17 - 3	7 - 10	12 - 7	16 - 9	-	11 - 10	15 - 10	-	11 - 3	15 - 1
	SP	No.3	8 - 1	13 - 0	17 - 4	7 - 10	12 - 7	16 - 10	-	12 - 3	16 - 4	-	11 - 7	15 - 5	-	11 - 0	14 - 3
	SP	Stud	8 - 1	13 - 0	17 - 4	7 - 10	12 - 7	16 - 10	-	12 - 3	16 - 4	-	11 - 7	15 - 5	-	11 - 0	14 - 3
	SP	Standard	7 - 11	-	-	-	-	-	-	-	-	-	-	-	-	-	-
	SPF	SS	8 - 6	13 - 8	18 - 3	8 - 3	13 - 3	17 - 8	8 - 0	12 - 10	17 - 2	-	12 - 2	16 - 3	-	11 - 6	15 - 5
	SPF	No.1	8 - 4	13 - 4	17 - 10	8 - 1	12 - 11	17 - 3	7 - 10	12 - 7	16 - 9	-	11 - 10	15 - 10	-	11 - 3	15 - 1
	SPF	No.2	8 - 4	13 - 4	17 - 10	8 - 1	12 - 11	17 - 3	7 - 10	12 - 7	16 - 9	-	11 - 10	15 - 10	-	11 - 3	15 - 1
	SPF	No.3/Stud	7 - 11	12 - 8	16 - 10	-	12 - 3	16 - 4	-	11 - 11	15 - 11	-	11 - 3	15 - 0	-	10 - 8	14 - 3
	SPF	Standard	7 - 11	-	-	-	-	-	-	-	-	-	-	-	-	-	-

See Table 3.20A footnotes.

Copyright © American Wood Council. Downloaded/printed pursuant to License Agreement. No reproduction or transfer authorized.

Table 3.20A3 (Cont.) **Maximum Exterior Loadbearing[1] and Non-Loadbearing Stud Lengths for Common Lumber Species Resisting Interior Zone Wind Loads - Stud Deflection Limit = H/360**

(Fully Sheathed with a Minimum Sheathing Material)[a]

Exposure B H/360

Wind Speed 3-second gust (mph) (See Figure 1.1)			150			160			170			180			195		
Stud Spacing (in.)	Species	Grade	2x4	2x6	2x8	2x4	2x6	2x8	2x4	2x6	2x8	2x4	2x6	2x8	2x4	2x6	2x8
			Maximum Allowable Stud Length (ft-in.)[1]														
12	DFL	SS	9 - 6	15 - 3	20-0†	9 - 1	14 - 6	19 - 5	8 - 8	13 - 11	18 - 7	8 - 4	13 - 5	17 - 11	7 - 11	12 - 8	16 - 11
	DFL	No.1	9 - 1	14 - 8	19 - 7	8 - 9	14 - 0	18 - 8	8 - 4	13 - 5	17 - 11	8 - 0	12 - 11	17 - 2	-	12 - 2	16 - 3
	DFL	No.2	8 - 11	14 - 4	19 - 2	8 - 6	13 - 8	18 - 4	8 - 2	13 - 2	17 - 6	7 - 10	12 - 7	16 - 10	-	11 - 11	15 - 11
	DFL	No.3/Stud	8 - 6	13 - 8	18 - 3	8 - 2	13 - 1	17 - 5	7 - 10	12 - 6	16 - 9	-	12 - 0	16 - 1	-	11 - 5	15 - 2
	DFL	Standard	8 - 6	-	-	8 - 2	-	-	7 - 10	-	-	-	-	-	-	-	-
	HF	SS	8 - 11	14 - 4	19 - 2	8 - 6	13 - 8	18 - 4	8 - 2	13 - 2	17 - 6	7 - 10	12 - 7	16 - 10	-	11 - 11	15 - 11
	HF	No.1	8 - 9	14 - 0	18 - 9	8 - 4	13 - 5	17 - 11	8 - 0	12 - 10	17 - 2	-	12 - 4	16 - 6	-	11 - 8	15 - 7
	HF	No.2	8 - 4	13 - 4	17 - 10	7 - 11	12 - 9	17 - 0	-	12 - 3	16 - 4	-	11 - 9	15 - 8	-	11 - 1	14 - 10
	HF	No.3/Stud	8 - 1	13 - 0	17 - 4	-	12 - 5	16 - 7	-	11 - 10	15 - 10	-	11 - 5	15 - 3	-	10 - 9	14 - 5
	HF	Standard	8 - 1	-	-	-	-	-	-	-	-	-	-	-	-	-	-
	SP	SS	9 - 4	14 - 11	19 - 11	8 - 11	14 - 3	19 - 1	8 - 6	13 - 8	18 - 3	8 - 2	13 - 2	17 - 7	7 - 9	12 - 5	16 - 7
	SP	No.1	8 - 11	14 - 4	19 - 2	8 - 6	13 - 8	18 - 4	8 - 2	13 - 2	17 - 6	7 - 10	12 - 7	16 - 10	-	11 - 11	15 - 11
	SP	No.2	8 - 6	13 - 8	18 - 3	8 - 2	13 - 1	17 - 5	7 - 10	12 - 6	16 - 9	-	12 - 0	16 - 1	-	11 - 5	15 - 2
	SP	No.3	8 - 4	13 - 4	17 - 10	7 - 11	12 - 9	17 - 0	-	12 - 3	16 - 4	-	11 - 9	15 - 8	-	11 - 1	14 - 6
	SP	Stud	8 - 4	13 - 4	17 - 10	7 - 11	12 - 9	17 - 0	-	12 - 3	16 - 4	-	11 - 9	15 - 8	-	11 - 1	14 - 6
	SP	Standard	8 - 1	-	-	-	-	-	-	-	-	-	-	-	-	-	-
	SPF	SS	8 - 9	14 - 0	18 - 9	8 - 4	13 - 5	17 - 11	8 - 0	12 - 10	17 - 2	-	12 - 4	16 - 6	-	11 - 8	15 - 7
	SPF	No.1	8 - 6	13 - 8	18 - 3	8 - 2	13 - 1	17 - 5	7 - 10	12 - 6	16 - 9	-	12 - 0	16 - 1	-	11 - 5	15 - 2
	SPF	No.2	8 - 6	13 - 8	18 - 3	8 - 2	13 - 1	17 - 5	7 - 10	12 - 6	16 - 9	-	12 - 0	16 - 1	-	11 - 5	15 - 2
	SPF	No.3/Stud	8 - 1	13 - 0	17 - 4	-	12 - 5	16 - 7	-	11 - 10	15 - 10	-	11 - 5	15 - 3	-	10 - 9	14 - 5
	SPF	Standard	8 - 1	-	-	-	-	-	-	-	-	-	-	-	-	-	-
16	DFL	SS	8 - 7	13 - 9	18 - 5	8 - 2	13 - 2	17 - 7	7 - 10	12 - 7	16 - 10	-	12 - 1	16 - 2	-	11 - 5	15 - 4
	DFL	No.1	8 - 3	13 - 3	17 - 8	7 - 11	12 - 8	16 - 11	-	12 - 2	16 - 2	-	11 - 8	15 - 7	-	11 - 0	14 - 9
	DFL	No.2	8 - 1	13 - 0	17 - 4	-	12 - 5	16 - 7	-	11 - 10	15 - 10	-	11 - 5	15 - 3	-	10 - 9	14 - 5
	DFL	No.3/Stud	-	12 - 4	16 - 6	-	11 - 10	15 - 9	-	11 - 4	15 - 2	-	10 - 11	14 - 7	-	10 - 4	13 - 8
	DFL	Standard	-	-	-	-	-	-	-	-	-	-	-	-	-	-	-
	HF	SS	8 - 1	13 - 0	17 - 4	-	12 - 5	16 - 7	-	11 - 10	15 - 10	-	11 - 5	15 - 3	-	10 - 9	14 - 5
	HF	No.1	7 - 11	12 - 8	16 - 11	-	12 - 1	16 - 2	-	11 - 7	15 - 6	-	11 - 2	14 - 11	-	10 - 7	14 - 1
	HF	No.2	-	12 - 1	16 - 1	-	11 - 6	15 - 5	-	11 - 1	14 - 9	-	10 - 7	14 - 2	-	10 - 0	13 - 5
	HF	No.3/Stud	-	11 - 9	15 - 8	-	11 - 2	15 - 0	-	10 - 9	14 - 4	-	10 - 4	13 - 9	-	9 - 9	13 - 0
	HF	Standard	-	-	-	-	-	-	-	-	-	-	-	-	-	-	-
	SP	SS	8 - 5	13 - 6	18 - 0	8 - 1	12 - 11	17 - 3	-	12 - 4	16 - 6	-	11 - 11	15 - 11	-	11 - 3	15 - 0
	SP	No.1	8 - 1	13 - 0	17 - 4	-	12 - 5	16 - 7	-	11 - 10	15 - 10	-	11 - 5	15 - 3	-	10 - 9	14 - 5
	SP	No.2	-	12 - 4	16 - 6	-	11 - 10	15 - 9	-	11 - 4	15 - 2	-	10 - 11	14 - 7	-	10 - 4	13 - 9
	SP	No.3	-	12 - 1	16 - 1	-	11 - 6	15 - 4	-	11 - 1	14 - 4	-	10 - 7	13 - 6	-	9 - 8	12 - 5
	SP	Stud	-	12 - 1	16 - 1	-	11 - 6	15 - 4	-	11 - 1	14 - 4	-	10 - 7	13 - 6	-	9 - 8	12 - 5
	SP	Standard	-	-	-	-	-	-	-	-	-	-	-	-	-	-	-
	SPF	SS	7 - 11	12 - 8	16 - 11	-	12 - 1	16 - 2	-	11 - 7	15 - 6	-	11 - 2	14 - 11	-	10 - 7	14 - 1
	SPF	No.1	-	12 - 4	16 - 6	-	11 - 10	15 - 9	-	11 - 4	15 - 2	-	10 - 11	14 - 7	-	10 - 4	13 - 9
	SPF	No.2	-	12 - 4	16 - 6	-	11 - 10	15 - 9	-	11 - 4	15 - 2	-	10 - 11	14 - 7	-	10 - 4	13 - 9
	SPF	No.3/Stud	-	11 - 9	15 - 8	-	11 - 2	15 - 0	-	10 - 9	14 - 4	-	10 - 4	13 - 9	-	9 - 9	13 - 0
	SPF	Standard	-	-	-	-	-	-	-	-	-	-	-	-	-	-	-
24	DFL	SS	-	11 - 11	15 - 11	-	11 - 5	15 - 3	-	10 - 11	14 - 7	-	10 - 6	14 - 1	-	9 - 11	13 - 3
	DFL	No.1	-	11 - 6	15 - 4	-	11 - 0	14 - 8	-	10 - 6	14 - 1	-	10 - 1	13 - 6	-	9 - 7	12 - 9
	DFL	No.2	-	11 - 3	15 - 0	-	10 - 9	14 - 4	-	10 - 4	13 - 9	-	9 - 11	13 - 3	-	9 - 4	12 - 6
	DFL	No.3/Stud	-	10 - 9	14 - 4	-	10 - 3	13 - 7	-	9 - 10	12 - 9	-	9 - 4	12 - 0	-	8 - 7	11 - 0
	DFL	Standard	-	-	-	-	-	-	-	-	-	-	-	-	-	-	-
	HF	SS	-	11 - 3	15 - 0	-	10 - 9	14 - 4	-	10 - 4	13 - 9	-	9 - 11	13 - 3	-	9 - 4	12 - 6
	HF	No.1	-	11 - 0	14 - 8	-	10 - 6	14 - 0	-	10 - 1	13 - 5	-	9 - 8	12 - 11	-	9 - 2	12 - 3
	HF	No.2	-	10 - 6	14 - 0	-	10 - 0	13 - 4	-	9 - 7	12 - 10	-	9 - 3	12 - 4	-	8 - 9	11 - 8
	HF	No.3/Stud	-	10 - 2	13 - 7	-	9 - 9	13 - 0	-	9 - 4	12 - 5	-	9 - 0	11 - 8	-	8 - 4	10 - 9
	HF	Standard	-	-	-	-	-	-	-	-	-	-	-	-	-	-	-
	SP	SS	-	11 - 9	15 - 8	-	11 - 2	15 - 0	-	10 - 9	14 - 4	-	10 - 4	13 - 9	-	9 - 9	13 - 0
	SP	No.1	-	11 - 3	15 - 0	-	10 - 9	14 - 4	-	10 - 4	13 - 9	-	9 - 11	13 - 3	-	9 - 4	12 - 6
	SP	No.2	-	10 - 9	14 - 4	-	10 - 3	13 - 8	-	9 - 10	13 - 2	-	9 - 5	12 - 7	-	8 - 11	11 - 11
	SP	No.3	-	10 - 4	13 - 3	-	9 - 8	12 - 4	-	9 - 0	11 - 7	-	8 - 6	10 - 10	-	7 - 10	10 - 0
	SP	Stud	-	10 - 4	13 - 3	-	9 - 8	12 - 4	-	9 - 0	11 - 7	-	8 - 6	10 - 10	-	7 - 10	10 - 0
	SP	Standard	-	-	-	-	-	-	-	-	-	-	-	-	-	-	-
	SPF	SS	-	11 - 0	14 - 8	-	10 - 6	14 - 0	-	10 - 1	13 - 5	-	9 - 8	12 - 11	-	9 - 2	12 - 3
	SPF	No.1	-	10 - 9	14 - 4	-	10 - 3	13 - 8	-	9 - 10	13 - 2	-	9 - 5	12 - 7	-	8 - 11	11 - 11
	SPF	No.2	-	10 - 9	14 - 4	-	10 - 3	13 - 8	-	9 - 10	13 - 2	-	9 - 5	12 - 7	-	8 - 11	11 - 11
	SPF	No.3/Stud	-	10 - 2	13 - 7	-	9 - 9	13 - 0	-	9 - 4	12 - 5	-	9 - 0	11 - 8	-	8 - 4	10 - 9
	SPF	Standard	-	-	-	-	-	-	-	-	-	-	-	-	-	-	-

See Table 3.20A footnotes.

Copyright © American Wood Council. Downloaded/printed pursuant to License Agreement. No reproduction or transfer authorized.

Table 3.20A4 Maximum Exterior Loadbearing[1] and Non-Loadbearing Stud Lengths for Common Lumber Species Resisting Interior Zone Wind Loads - Stud Deflection Limit = H/180

Exposure C H/180

(Fully Sheathed with a Minimum Sheathing Material)[a]

Wind Speed 3-second gust (mph) (See Figure 1.1)			90			95			100			105		
Stud Spacing (in.)	Species	Grade	2x4	2x6	2x8	2x4	2x6	2x8	2x4	2x6	2x8	2x4	2x6	2x8
			Maximum Allowable Stud Length (ft-in.)[1]											
12	DFL	SS	14-0††	20-0†	20-0†	14-0††	20-0†	20-0†	14-0††	20-0†	20-0†	13 - 10	20-0†	20-0†
	DFL	No.1	14-0††	20-0†	20-0†	14-0††	20-0†	20-0†	13 - 9	20-0†	20-0†	13 - 3	20-0†	20-0†
	DFL	No.2	14-0††	20-0†	20-0†	13 - 11	20-0†	20-0†	13 - 5	20-0†	20-0†	13 - 0	20-0†	20-0†
	DFL	No.3/Stud	13 - 10	20-0†	20-0†	13 - 4	20-0†	20-0†	12 - 10	20-0†	20-0†	12 - 5	19 - 11	20-0†
	DFL	Standard	13 - 4	-	-	12 - 7	-	-	11 - 11	-	-	11 - 4	-	-
	HF	SS	14-0††	20-0†	20-0†	13 - 11	20-0†	20-0†	13 - 5	20-0†	20-0†	13 - 0	20-0†	20-0†
	HF	No.1	14-0††	20-0†	20-0†	13 - 8	20-0†	20-0†	13 - 2	20-0†	20-0†	12 - 9	20-0†	20-0†
	HF	No.2	13 - 6	20-0†	20-0†	13 - 0	20-0†	20-0†	12 - 6	20-0†	20-0†	12 - 1	19 - 5	20-0†
	HF	No.3/Stud	13 - 1	20-0†	20-0†	12 - 7	20-0†	20-0†	12 - 2	19 - 6	20-0†	11 - 9	18 - 11	20-0†
	HF	Standard	13 - 1	-	-	12 - 4	-	-	11 - 8	-	-	11 - 1	-	-
	SP	SS	14-0††	20-0†	20-0†	14-0††	20-0†	20-0†	14-0††	20-0†	20-0†	13 - 7	20-0†	20-0†
	SP	No.1	14-0††	20-0†	20-0†	13 - 11	20-0†	20-0†	13 - 5	20-0†	20-0†	13 - 0	20-0†	20-0†
	SP	No.2	13 - 10	20-0†	20-0†	13 - 4	20-0†	20-0†	12 - 10	20-0†	20-0†	12 - 5	19 - 11	20-0†
	SP	No.3	13 - 6	20-0†	20-0†	13 - 0	20-0†	20-0†	12 - 6	19 - 5	20-0†	12 - 1	18 - 5	20-0†
	SP	Stud	13 - 6	20-0†	20-0†	13 - 0	20-0†	20-0†	12 - 6	19 - 5	20-0†	12 - 1	18 - 5	20-0†
	SP	Standard	12 - 1	-	-	11 - 5	-	-	10 - 9	-	-	10 - 3	-	-
	SPF	SS	14-0††	20-0†	20-0†	13 - 8	20-0†	20-0†	13 - 2	20-0†	20-0†	12 - 9	20-0†	20-0†
	SPF	No.1	13 - 10	20-0†	20-0†	13 - 4	20-0†	20-0†	12 - 10	20-0†	20-0†	12 - 5	19 - 11	20-0†
	SPF	No.2	13 - 10	20-0†	20-0†	13 - 4	20-0†	20-0†	12 - 10	20-0†	20-0†	12 - 5	19 - 11	20-0†
	SPF	No.3/Stud	13 - 1	20-0†	20-0†	12 - 7	20-0†	20-0†	12 - 2	19 - 6	20-0†	11 - 9	18 - 11	20-0†
	SPF	Standard	13 - 1	-	-	12 - 4	-	-	11 - 8	-	-	11 - 1	-	-
16	DFL	SS	13 - 11	20-0†	20-0†	13 - 5	20-0†	20-0†	12 - 11	20-0†	20-0†	12 - 6	20-0†	20-0†
	DFL	No.1	13 - 4	20-0†	20-0†	12 - 11	20-0†	20-0†	12 - 5	20 - 0	20-0†	12 - 0	19 - 3	20-0†
	DFL	No.2	13 - 1	20-0†	20-0†	12 - 7	20-0†	20-0†	12 - 2	19 - 6	20-0†	11 - 9	18 - 11	20-0†
	DFL	No.3/Stud	12 - 6	20-0†	20-0†	12 - 0	19 - 3	20-0†	11 - 7	18 - 3	20-0†	11 - 3	17 - 3	20-0†
	DFL	Standard	11 - 5	-	-	10 - 10	-	-	10 - 3	-	-	9 - 9	-	-
	HF	SS	13 - 1	20-0†	20-0†	12 - 7	20-0†	20-0†	12 - 2	19 - 6	20-0†	11 - 9	18 - 11	20-0†
	HF	No.1	12 - 10	20-0†	20-0†	12 - 4	19 - 10	20-0†	11 - 11	19 - 1	20-0†	11 - 6	18 - 6	20-0†
	HF	No.2	12 - 2	19 - 7	20-0†	11 - 9	18 - 10	20-0†	11 - 4	18 - 2	20-0†	10 - 11	17 - 7	20-0†
	HF	No.3/Stud	11 - 10	19 - 0	20-0†	11 - 5	18 - 4	20-0†	11 - 0	17 - 8	20-0†	10 - 8	16 - 10	20-0†
	HF	Standard	11 - 2	-	-	10 - 7	-	-	10 - 0	-	-	9 - 6	-	-
	SP	SS	13 - 8	20-0†	20-0†	13 - 2	20-0†	20-0†	12 - 8	20-0†	20-0†	12 - 3	19 - 8	20-0†
	SP	No.1	13 - 1	20-0†	20-0†	12 - 7	20-0†	20-0†	12 - 2	19 - 6	20-0†	11 - 9	18 - 11	20-0†
	SP	No.2	12 - 6	20-0†	20-0†	12 - 0	19 - 4	20-0†	11 - 7	18 - 8	20-0†	11 - 3	18 - 0	20-0†
	SP	No.3	12 - 2	18 - 7	20-0†	11 - 7	17 - 7	20-0†	10 - 11	16 - 7	20-0†	10 - 4	15 - 9	20-0†
	SP	Stud	12 - 2	18 - 7	20-0†	11 - 7	17 - 7	20-0†	10 - 11	16 - 7	20-0†	10 - 4	15 - 9	20-0†
	SP	Standard	10 - 4	-	-	9 - 9	-	-	9 - 3	-	-	8 - 9	-	-
	SPF	SS	12 - 10	20-0†	20-0†	12 - 4	19 - 10	20-0†	11 - 11	19 - 1	20-0†	11 - 6	18 - 6	20-0†
	SPF	No.1	12 - 6	20-0†	20-0†	12 - 0	19 - 4	20-0†	11 - 7	18 - 8	20-0†	11 - 3	18 - 0	20-0†
	SPF	No.2	12 - 6	20-0†	20-0†	12 - 0	19 - 4	20-0†	11 - 7	18 - 8	20-0†	11 - 3	18 - 0	20-0†
	SPF	No.3/Stud	11 - 10	19 - 0	20-0†	11 - 5	18 - 4	20-0†	11 - 0	17 - 8	20-0†	10 - 8	16 - 10	20-0†
	SPF	Standard	11 - 2	-	-	10 - 7	-	-	10 - 0	-	-	9 - 6	-	-
24	DFL	SS	12 - 1	19 - 5	20-0†	11 - 7	18 - 8	20-0†	11 - 3	18 - 0	20-0†	10 - 10	17 - 5	20-0†
	DFL	No.1	11 - 7	18 - 8	20-0†	11 - 2	18 - 0	20-0†	10 - 9	17 - 4	20-0†	10 - 5	16 - 9	20-0†
	DFL	No.2	11 - 4	18 - 3	20-0†	10 - 11	17 - 7	20-0†	10 - 7	17 - 0	20-0†	10 - 3	16 - 5	20-0†
	DFL	No.3/Stud	10 - 10	16 - 5	20-0†	10 - 4	15 - 6	20 - 0	9 - 9	14 - 8	18 - 11	9 - 3	13 - 11	17 - 11
	DFL	Standard	9 - 3	-	-	8 - 8	-	-	8 - 3	-	-	7 - 10	-	-
	HF	SS	11 - 4	18 - 3	20-0†	10 - 11	17 - 7	20-0†	10 - 7	17 - 0	20-0†	10 - 3	16 - 5	20-0†
	HF	No.1	11 - 1	17 - 10	20-0†	10 - 8	17 - 2	20-0†	10 - 4	16 - 7	20-0†	10 - 0	16 - 0	20-0†
	HF	No.2	10 - 7	17 - 0	20-0†	10 - 2	16 - 4	20-0†	9 - 10	15 - 9	20-0†	9 - 6	15 - 3	20-0†
	HF	No.3/Stud	10 - 3	16 - 0	20-0†	9 - 11	15 - 1	19 - 5	9 - 6	14 - 3	18 - 5	9 - 0	13 - 7	17 - 5
	HF	Standard	9 - 0	-	-	8 - 6	-	-	8 - 1	-	-	-	-	-
	SP	SS	11 - 10	19 - 0	20-0†	11 - 5	18 - 4	20-0†	11 - 0	17 - 8	20-0†	10 - 8	17 - 1	20-0†
	SP	No.1	11 - 4	18 - 3	20-0†	10 - 11	17 - 7	20-0†	10 - 7	17 - 0	20-0†	10 - 3	16 - 5	20-0†
	SP	No.2	10 - 10	17 - 5	20-0†	10 - 5	16 - 9	20-0†	10 - 1	16 - 2	20-0†	9 - 9	15 - 8	20-0†
	SP	No.3	9 - 10	15 - 0	19 - 2	9 - 4	14 - 1	18 - 1	8 - 10	13 - 4	17 - 1	8 - 4	12 - 8	16 - 3
	SP	Stud	9 - 10	15 - 0	19 - 2	9 - 4	14 - 1	18 - 1	8 - 10	13 - 4	17 - 1	8 - 4	12 - 8	16 - 3
	SP	Standard	8 - 4	-	-	7 - 10	-	-	-	-	-	-	-	-
	SPF	SS	11 - 1	17 - 10	20-0†	10 - 8	17 - 2	20-0†	10 - 4	16 - 7	20-0†	10 - 0	16 - 0	20-0†
	SPF	No.1	10 - 10	17 - 5	20-0†	10 - 5	16 - 9	20-0†	10 - 1	16 - 2	20-0†	9 - 9	15 - 8	20-0†
	SPF	No.2	10 - 10	17 - 5	20-0†	10 - 5	16 - 9	20-0†	10 - 1	16 - 2	20-0†	9 - 9	15 - 8	20-0†
	SPF	No.3/Stud	10 - 3	16 - 0	20-0†	9 - 11	15 - 1	19 - 5	9 - 6	14 - 3	18 - 5	9 - 0	13 - 7	17 - 5
	SPF	Standard	9 - 0	-	-	8 - 6	-	-	8 - 1	-	-	-	-	-

See Table 3.20A footnotes.

Copyright © American Wood Council. Downloaded/printed pursuant to License Agreement. No reproduction or transfer authorized.

Table 3.20A4 (Cont.) Maximum Exterior Loadbearing[1] and Non-Loadbearing Stud Lengths for Common Lumber Species Resisting Interior Zone Wind Loads - Stud Deflection Limit = H/180

Exposure C H/180

(Fully Sheathed with a Minimum Sheathing Material)[a]

Wind Speed 3-second gust (mph) (See Figure 1.1)			110			115			120			130			140		
Stud Spacing (in.)	Species	Grade	2x4	2x6	2x8	2x4	2x6	2x8	2x4	2x6	2x8	2x4	2x6	2x8	2x4	2x6	2x8
			Maximum Allowable Stud Length (ft-in.)[1]														
12	DFL	SS	13 - 4	20-0†	20-0†	13 - 0	20-0†	20-0†	12 - 7	20-0†	20-0†	11 - 11	19 - 1	20-0†	11 - 4	18 - 2	20-0†
	DFL	No.1	12 - 10	20-0†	20-0†	12 - 6	20-0†	20-0†	12 - 1	19 - 5	20-0†	11 - 5	18 - 4	20-0†	10 - 10	17 - 5	20-0†
	DFL	No.2	12 - 7	20-0†	20-0†	12 - 2	19 - 7	20-0†	11 - 10	19 - 0	20-0†	11 - 2	18 - 0	20-0†	10 - 8	17 - 1	20-0†
	DFL	No.3/Stud	12 - 0	19 - 2	20-0†	11 - 8	18 - 4	20-0†	11 - 4	17 - 6	20-0†	10 - 8	16 - 0	20-0†	9 - 10	14 - 10	19 - 1
	DFL	Standard	10 - 9	-	-	10 - 3	-	-	9 - 10	-	-	9 - 0	-	-	8 - 4	-	-
	HF	SS	12 - 7	20-0†	20-0†	12 - 2	19 - 7	20-0†	11 - 10	19 - 0	20-0†	11 - 2	18 - 0	20-0†	10 - 8	17 - 1	20-0†
	HF	No.1	12 - 4	19 - 9	20-0†	11 - 11	19 - 2	20-0†	11 - 7	18 - 7	20-0†	11 - 0	17 - 7	20-0†	10 - 5	16 - 8	20-0†
	HF	No.2	11 - 8	18 - 10	20-0†	11 - 4	18 - 3	20-0†	11 - 0	17 - 8	20-0†	10 - 5	16 - 9	20-0†	9 - 11	15 - 11	20-0†
	HF	No.3/Stud	11 - 5	18 - 3	20-0†	11 - 0	17 - 9	20-0†	10 - 9	17 - 0	20-0†	10 - 2	15 - 8	20-0†	9 - 7	14 - 5	18 - 7
	HF	Standard	10 - 6	-	-	10 - 0	-	-	9 - 7	-	-	8 - 10	-	-	8 - 2	-	-
	SP	SS	13 - 1	20-0†	20-0†	12 - 9	20-0†	20-0†	12 - 4	19 - 10	20-0†	11 - 8	18 - 9	20-0†	11 - 1	17 - 10	20-0†
	SP	No.1	12 - 7	20-0†	20-0†	12 - 2	19 - 7	20-0†	11 - 10	19 - 0	20-0†	11 - 2	18 - 0	20-0†	10 - 8	17 - 1	20-0†
	SP	No.2	12 - 0	19 - 3	20-0†	11 - 8	18 - 8	20-0†	11 - 4	18 - 2	20-0†	10 - 8	17 - 2	20-0†	10 - 2	16 - 4	20-0†
	SP	No.3	11 - 6	17 - 6	20-0†	11 - 0	16 - 8	20-0†	10 - 6	15 - 11	20-0†	9 - 8	14 - 8	18 - 9	8 - 11	13 - 6	17 - 4
	SP	Stud	11 - 6	17 - 6	20-0†	11 - 0	16 - 8	20-0†	10 - 6	15 - 11	20-0†	9 - 8	14 - 8	18 - 9	8 - 11	13 - 6	17 - 4
	SP	Standard	9 - 9	-	-	9 - 3	-	-	8 - 10	-	-	8 - 2	-	-	-	-	-
	SPF	SS	12 - 4	19 - 9	20-0†	11 - 11	19 - 2	20-0†	11 - 7	18 - 7	20-0†	11 - 0	17 - 7	20-0†	10 - 5	16 - 8	20-0†
	SPF	No.1	12 - 0	19 - 3	20-0†	11 - 8	18 - 8	20-0†	11 - 4	18 - 2	20-0†	10 - 8	17 - 2	20-0†	10 - 2	16 - 4	20-0†
	SPF	No.2	12 - 0	19 - 3	20-0†	11 - 8	18 - 8	20-0†	11 - 4	18 - 2	20-0†	10 - 8	17 - 2	20-0†	10 - 2	16 - 4	20-0†
	SPF	No.3/Stud	11 - 5	18 - 3	20-0†	11 - 0	17 - 9	20-0†	10 - 9	17 - 0	20-0†	10 - 2	15 - 8	20-0†	9 - 7	14 - 5	18 - 7
	SPF	Standard	10 - 6	-	-	10 - 0	-	-	9 - 7	-	-	8 - 10	-	-	8 - 2	-	-
16	DFL	SS	12 - 1	19 - 5	20-0†	11 - 9	18 - 10	20-0†	11 - 5	18 - 3	20-0†	10 - 9	17 - 3	20-0†	10 - 3	16 - 5	20-0†
	DFL	No.1	11 - 8	18 - 8	20-0†	11 - 3	18 - 1	20-0†	10 - 11	17 - 7	20-0†	10 - 4	16 - 7	20-0†	9 - 10	15 - 9	20-0†
	DFL	No.2	11 - 5	18 - 3	20-0†	11 - 0	17 - 9	20-0†	10 - 9	17 - 2	20-0†	10 - 2	16 - 3	20-0†	9 - 7	15 - 5	20-0†
	DFL	No.3/Stud	10 - 10	16 - 5	20-0†	10 - 5	15 - 8	20-0†	10 - 0	15 - 0	19 - 4	9 - 2	13 - 9	17 - 9	8 - 5	12 - 8	16 - 4
	DFL	Standard	9 - 3	-	-	8 - 10	-	-	8 - 5	-	-	-	-	-	-	-	-
	HF	SS	11 - 5	18 - 3	20-0†	11 - 0	17 - 9	20-0†	10 - 9	17 - 2	20-0†	10 - 2	16 - 3	20-0†	9 - 7	15 - 5	20-0†
	HF	No.1	11 - 2	17 - 10	20-0†	10 - 9	17 - 4	20-0†	10 - 6	16 - 10	20-0†	9 - 11	15 - 11	20-0†	9 - 5	15 - 1	20-0†
	HF	No.2	10 - 7	17 - 0	20-0†	10 - 3	16 - 6	20-0†	10 - 0	16 - 0	20-0†	9 - 5	15 - 1	20-0†	9 - 0	14 - 4	19 - 2
	HF	No.3/Stud	10 - 4	16 - 0	20-0†	10 - 0	15 - 3	19 - 8	9 - 8	14 - 7	18 - 10	8 - 11	13 - 5	17 - 3	8 - 3	12 - 4	15 - 11
	HF	Standard	9 - 0	-	-	8 - 7	-	-	8 - 3	-	-	-	-	-	-	-	-
	SP	SS	11 - 10	19 - 1	20-0†	11 - 6	18 - 6	20-0†	11 - 2	17 - 11	20-0†	10 - 7	16 - 11	20-0†	10 - 0	16 - 1	20-0†
	SP	No.1	11 - 5	18 - 3	20-0†	11 - 0	17 - 9	20-0†	10 - 9	17 - 2	20-0†	10 - 2	16 - 3	20-0†	9 - 7	15 - 5	20-0†
	SP	No.2	10 - 10	17 - 5	20-0†	10 - 6	16 - 11	20-0†	10 - 3	16 - 5	20-0†	9 - 8	15 - 6	20-0†	9 - 2	14 - 9	19 - 8
	SP	No.3	9 - 10	15 - 0	19 - 3	9 - 5	14 - 4	18 - 4	9 - 0	13 - 8	17 - 6	8 - 3	12 - 6	16 - 1	-	11 - 7	14 - 10
	SP	Stud	9 - 10	15 - 0	19 - 3	9 - 5	14 - 4	18 - 4	9 - 0	13 - 8	17 - 6	8 - 3	12 - 6	16 - 1	-	11 - 7	14 - 10
	SP	Standard	8 - 4	-	-	8 - 0	-	-	-	-	-	-	-	-	-	-	-
	SPF	SS	11 - 2	17 - 10	20-0†	10 - 9	17 - 4	20-0†	10 - 6	16 - 10	20-0†	9 - 11	15 - 11	20-0†	9 - 5	15 - 1	20-0†
	SPF	No.1	10 - 10	17 - 5	20-0†	10 - 6	16 - 11	20-0†	10 - 3	16 - 5	20-0†	9 - 8	15 - 6	20-0†	9 - 2	14 - 9	19 - 8
	SPF	No.2	10 - 10	17 - 5	20-0†	10 - 6	16 - 11	20-0†	10 - 3	16 - 5	20-0†	9 - 8	15 - 6	20-0†	9 - 2	14 - 9	19 - 8
	SPF	No.3/Stud	10 - 4	16 - 0	20-0†	10 - 0	15 - 3	19 - 8	9 - 8	14 - 7	18 - 10	8 - 11	13 - 5	17 - 3	8 - 3	12 - 4	15 - 11
	SPF	Standard	9 - 0	-	-	8 - 7	-	-	8 - 3	-	-	-	-	-	-	-	-
24	DFL	SS	10 - 6	16 - 10	20-0†	10 - 2	16 - 4	20-0†	9 - 11	15 - 10	20-0†	9 - 4	15 - 0	20-0†	8 - 10	14 - 3	19 - 0
	DFL	No.1	10 - 1	16 - 2	20-0†	9 - 9	15 - 8	20-0†	9 - 6	15 - 3	20-0†	9 - 0	14 - 5	19 - 3	8 - 6	13 - 8	18 - 3
	DFL	No.2	9 - 11	15 - 10	20-0†	9 - 7	15 - 5	20-0†	9 - 4	14 - 11	19 - 11	8 - 10	14 - 1	18 - 10	8 - 4	13 - 5	17 - 7
	DFL	No.3/Stud	8 - 10	13 - 3	17 - 1	8 - 5	12 - 7	16 - 3	8 - 0	12 - 1	15 - 6	-	11 - 1	14 - 3	-	10 - 3	13 - 2
	DFL	Standard	-	-	-	-	-	-	-	-	-	-	-	-	-	-	-
	HF	SS	9 - 11	15 - 10	20-0†	9 - 7	15 - 5	20-0†	9 - 4	14 - 11	19 - 11	8 - 10	14 - 1	18 - 10	8 - 4	13 - 5	17 - 11
	HF	No.1	9 - 8	15 - 6	20-0†	9 - 4	15 - 0	20-0†	9 - 1	14 - 7	19 - 6	8 - 7	13 - 10	18 - 5	8 - 2	13 - 1	17 - 6
	HF	No.2	9 - 2	14 - 9	19 - 9	8 - 11	14 - 4	19 - 1	8 - 8	13 - 11	18 - 7	8 - 2	13 - 2	17 - 6	7 - 9	12 - 6	16 - 8
	HF	No.3/Stud	8 - 7	12 - 11	16 - 7	8 - 2	12 - 3	15 - 10	7 - 10	11 - 9	15 - 2	-	10 - 9	13 - 11	-	10 - 0	12 - 10
	HF	Standard	-	-	-	-	-	-	-	-	-	-	-	-	-	-	-
	SP	SS	10 - 4	16 - 6	20-0†	10 - 0	16 - 0	20-0†	9 - 8	15 - 7	20-0†	9 - 2	14 - 8	19 - 8	8 - 8	14 - 0	18 - 8
	SP	No.1	9 - 11	15 - 10	20-0†	9 - 7	15 - 5	20-0†	9 - 4	14 - 11	19 - 11	8 - 10	14 - 1	18 - 10	8 - 4	13 - 5	17 - 11
	SP	No.2	9 - 5	15 - 2	20-0†	9 - 2	14 - 8	19 - 7	8 - 11	14 - 3	19 - 0	8 - 5	13 - 6	17 - 6	8 - 0	12 - 6	16 - 2
	SP	No.3	7 - 11	12 - 1	15 - 5	-	11 - 6	14 - 9	-	11 - 0	14 - 1	-	10 - 1	12 - 11	-	9 - 4	11 - 11
	SP	Stud	7 - 11	12 - 1	15 - 5	-	11 - 6	14 - 9	-	11 - 0	14 - 1	-	10 - 1	12 - 11	-	9 - 4	11 - 11
	SP	Standard	-	-	-	-	-	-	-	-	-	-	-	-	-	-	-
	SPF	SS	9 - 8	15 - 6	20-0†	9 - 4	15 - 0	20-0†	9 - 1	14 - 7	19 - 6	8 - 7	13 - 10	18 - 5	8 - 2	13 - 1	17 - 6
	SPF	No.1	9 - 5	15 - 2	20-0†	9 - 2	14 - 8	19 - 7	8 - 11	14 - 3	19 - 0	8 - 5	13 - 6	18 - 0	8 - 0	12 - 10	17 - 1
	SPF	No.2	9 - 5	15 - 2	20-0†	9 - 2	14 - 8	19 - 7	8 - 11	14 - 3	19 - 0	8 - 5	13 - 6	18 - 0	8 - 0	12 - 10	17 - 1
	SPF	No.3/Stud	8 - 7	12 - 11	16 - 7	8 - 2	12 - 3	15 - 10	7 - 10	11 - 9	15 - 2	-	10 - 9	13 - 11	-	10 - 0	12 - 10
	SPF	Standard	-	-	-	-	-	-	-	-	-	-	-	-	-	-	-

See Table 3.20A footnotes.

Copyright © American Wood Council. Downloaded/printed pursuant to License Agreement. No reproduction or transfer authorized.

Table 3.20A4 (Cont.) **Maximum Exterior Loadbearing[1] and Non-Loadbearing Stud Lengths for Common Lumber Species Resisting Interior Zone Wind Loads - Stud Deflection Limit = H/180**

Exposure C H/180

(Fully Sheathed with a Minimum Sheathing Material)[a]

Wind Speed 3-second gust (mph) (See Figure 1.1)			150			160			170			180			195		
Stud Spacing (in.)	Species	Grade	2x4	2x6	2x8	2x4	2x6	2x8	2x4	2x6	2x8	2x4	2x6	2x8	2x4	2x6	2x8
			Maximum Allowable Stud Length (ft-in.)[1]														
12	DFL	SS	10 - 9	17 - 3	20-0†	10 - 3	16 - 6	20-0†	9 - 10	15 - 10	20-0†	9 - 6	15 - 3	20-0†	9 - 0	14 - 5	19 - 3
	DFL	No.1	10 - 4	16 - 7	20-0†	9 - 11	15 - 11	20-0†	9 - 6	15 - 3	20-0†	9 - 1	14 - 8	19 - 7	8 - 8	13 - 10	18 - 6
	DFL	No.2	10 - 2	16 - 3	20-0†	9 - 8	15 - 7	20-0†	9 - 4	14 - 11	19 - 11	8 - 11	14 - 4	19 - 2	8 - 5	13 - 7	17 - 10
	DFL	No.3/Stud	9 - 2	13 - 9	17 - 9	8 - 7	12 - 10	16 - 6	8 - 0	12 - 0	15 - 6	-	11 - 4	14 - 7	-	10 - 5	13 - 5
	DFL	Standard	-	-	-	-	-	-	-	-	-	-	-	-	-	-	-
	HF	SS	10 - 2	16 - 3	20-0†	9 - 8	15 - 7	20-0†	9 - 4	14 - 11	19 - 11	8 - 11	14 - 4	19 - 2	8 - 5	13 - 7	18 - 1
	HF	No.1	9 - 11	15 - 11	20-0†	9 - 6	15 - 2	20-0†	9 - 1	14 - 7	19 - 6	8 - 9	14 - 0	18 - 9	8 - 3	13 - 3	17 - 8
	HF	No.2	9 - 5	15 - 2	20-0†	9 - 0	14 - 6	19 - 4	8 - 8	13 - 10	18 - 6	8 - 4	13 - 4	17 - 10	7 - 10	12 - 7	16 - 10
	HF	No.3/Stud	8 - 11	13 - 5	17 - 3	8 - 4	12 - 6	16 - 1	7 - 10	11 - 9	15 - 1	-	11 - 0	14 - 2	-	10 - 1	13 - 0
	HF	Standard	-	-	-	-	-	-	-	-	-	-	-	-	-	-	-
	SP	SS	10 - 7	17 - 0	20-0†	10 - 1	16 - 2	20-0†	9 - 8	15 - 6	20-0†	9 - 4	14 - 11	19 - 11	8 - 10	14 - 1	18 - 10
	SP	No.1	10 - 2	16 - 3	20-0†	9 - 8	15 - 7	20-0†	9 - 4	14 - 11	19 - 11	8 - 11	14 - 4	19 - 2	8 - 5	13 - 7	18 - 1
	SP	No.2	9 - 8	15 - 6	20-0†	9 - 3	14 - 10	19 - 10	8 - 10	14 - 3	19 - 0	8 - 6	13 - 8	17 - 11	8 - 1	12 - 9	16 - 5
	SP	No.3	8 - 3	12 - 7	16 - 1	-	11 - 9	15 - 0	-	11 - 0	14 - 1	-	10 - 4	13 - 3	-	9 - 6	12 - 2
	SP	Stud	8 - 3	12 - 7	16 - 1	-	11 - 9	15 - 0	-	11 - 0	14 - 1	-	10 - 4	13 - 3	-	9 - 6	12 - 2
	SP	Standard	-	-	-	-	-	-	-	-	-	-	-	-	-	-	-
	SPF	SS	9 - 11	15 - 11	20-0†	9 - 6	15 - 2	20-0†	9 - 1	14 - 7	19 - 6	8 - 9	14 - 0	18 - 9	8 - 3	13 - 3	17 - 8
	SPF	No.1	9 - 8	15 - 6	20-0†	9 - 3	14 - 10	19 - 10	8 - 10	14 - 3	19 - 0	8 - 6	13 - 8	18 - 3	8 - 1	12 - 11	17 - 3
	SPF	No.2	9 - 8	15 - 6	20-0†	9 - 3	14 - 10	19 - 10	8 - 10	14 - 3	19 - 0	8 - 6	13 - 8	18 - 3	8 - 1	12 - 11	17 - 3
	SPF	No.3/Stud	8 - 11	13 - 5	17 - 3	8 - 4	12 - 6	16 - 1	7 - 10	11 - 9	15 - 1	-	11 - 0	14 - 2	-	10 - 1	13 - 0
	SPF	Standard	-	-	-	-	-	-	-	-	-	-	-	-	-	-	-
16	DFL	SS	9 - 9	15 - 8	20-0†	9 - 4	14 - 11	20 - 0	8 - 11	14 - 4	19 - 2	8 - 7	13 - 9	18 - 5	8 - 1	13 - 0	17 - 5
	DFL	No.1	9 - 4	15 - 0	20-0†	9 - 0	14 - 4	19 - 2	8 - 7	13 - 9	18 - 5	8 - 3	13 - 3	17 - 8	7 - 10	12 - 6	16 - 2
	DFL	No.2	9 - 2	14 - 9	19 - 8	8 - 9	14 - 1	18 - 9	8 - 5	13 - 6	17 - 9	8 - 1	12 - 11	16 - 8	-	11 - 11	15 - 4
	DFL	No.3/Stud	7 - 10	11 - 10	15 - 2	-	11 - 0	14 - 2	-	10 - 4	13 - 3	-	9 - 8	12 - 6	-	8 - 11	11 - 6
	DFL	Standard	-	-	-	-	-	-	-	-	-	-	-	-	-	-	-
	HF	SS	9 - 2	14 - 9	19 - 8	8 - 9	14 - 1	18 - 9	8 - 5	13 - 6	18 - 0	8 - 1	13 - 0	17 - 4	-	12 - 3	16 - 4
	HF	No.1	9 - 0	14 - 5	19 - 3	8 - 7	13 - 9	18 - 4	8 - 3	13 - 2	17 - 7	7 - 11	12 - 8	16 - 11	-	12 - 0	16 - 0
	HF	No.2	8 - 6	13 - 8	18 - 3	8 - 2	13 - 1	17 - 6	7 - 10	12 - 6	16 - 9	-	12 - 1	16 - 1	-	11 - 5	14 - 10
	HF	No.3/Stud	-	11 - 6	14 - 10	-	10 - 9	13 - 10	-	10 - 1	12 - 11	-	9 - 5	12 - 2	-	8 - 8	11 - 2
	HF	Standard	-	-	-	-	-	-	-	-	-	-	-	-	-	-	-
	SP	SS	9 - 7	15 - 4	20-0†	9 - 2	14 - 8	19 - 7	8 - 9	14 - 1	18 - 9	8 - 5	13 - 6	18 - 0	8 - 0	12 - 9	17 - 1
	SP	No.1	9 - 2	14 - 9	19 - 8	8 - 9	14 - 1	18 - 9	8 - 5	13 - 6	18 - 0	8 - 1	13 - 0	17 - 4	-	12 - 3	16 - 4
	SP	No.2	8 - 9	14 - 1	18 - 8	8 - 4	13 - 5	17 - 5	8 - 0	12 - 8	16 - 4	-	11 - 11	15 - 4	-	10 - 11	14 - 1
	SP	No.3	-	10 - 9	13 - 9	-	10 - 0	12 - 10	-	9 - 5	12 - 1	-	8 - 10	11 - 4	-	8 - 2	10 - 5
	SP	Stud	-	10 - 9	13 - 9	-	10 - 0	12 - 10	-	9 - 5	12 - 1	-	8 - 10	11 - 4	-	8 - 2	10 - 5
	SP	Standard	-	-	-	-	-	-	-	-	-	-	-	-	-	-	-
	SPF	SS	9 - 0	14 - 5	19 - 3	8 - 7	13 - 9	18 - 4	8 - 3	13 - 2	17 - 7	7 - 11	12 - 8	16 - 11	-	12 - 0	16 - 0
	SPF	No.1	8 - 9	14 - 1	18 - 9	8 - 4	13 - 5	17 - 11	8 - 0	12 - 10	17 - 2	-	12 - 4	16 - 5	-	11 - 8	15 - 1
	SPF	No.2	8 - 9	14 - 1	18 - 9	8 - 4	13 - 5	17 - 11	8 - 0	12 - 10	17 - 2	-	12 - 4	16 - 5	-	11 - 8	15 - 1
	SPF	No.3/Stud	-	11 - 6	14 - 10	-	10 - 9	13 - 10	-	10 - 1	12 - 11	-	9 - 5	12 - 2	-	8 - 8	11 - 2
	SPF	Standard	-	-	-	-	-	-	-	-	-	-	-	-	-	-	-
24	DFL	SS	8 - 5	13 - 7	18 - 1	8 - 1	13 - 0	17 - 4	7 - 9	12 - 5	16 - 7	-	11 - 11	15 - 11	-	11 - 4	15 - 1
	DFL	No.1	8 - 2	13 - 1	17 - 3	7 - 9	12 - 6	16 - 1	-	11 - 9	15 - 1	-	11 - 0	14 - 2	-	10 - 1	13 - 0
	DFL	No.2	8 - 0	12 - 8	16 - 4	-	11 - 10	15 - 3	-	11 - 1	14 - 3	-	10 - 5	13 - 5	-	9 - 7	12 - 4
	DFL	No.3/Stud	-	9 - 6	12 - 3	-	8 - 10	11 - 5	-	8 - 4	10 - 8	-	7 - 10	10 - 1	-	-	9 - 3
	DFL	Standard	-	-	-	-	-	-	-	-	-	-	-	-	-	-	-
	HF	SS	8 - 0	12 - 9	17 - 1	-	12 - 3	16 - 4	-	11 - 8	15 - 8	-	11 - 3	15 - 0	-	10 - 8	14 - 2
	HF	No.1	7 - 9	12 - 6	16 - 8	-	11 - 11	15 - 11	-	11 - 5	14 - 11	-	10 - 11	14 - 0	-	10 - 0	12 - 10
	HF	No.2	-	11 - 11	15 - 10	-	11 - 4	14 - 9	-	10 - 9	13 - 10	-	10 - 1	13 - 0	-	9 - 3	11 - 11
	HF	No.3/Stud	-	9 - 3	11 - 11	-	8 - 8	11 - 1	-	8 - 1	10 - 5	-	-	9 - 10	-	-	9 - 0
	HF	Standard	-	-	-	-	-	-	-	-	-	-	-	-	-	-	-
	SP	SS	8 - 4	13 - 4	17 - 9	7 - 11	12 - 9	17 - 0	-	12 - 2	16 - 3	-	11 - 9	15 - 8	-	11 - 1	14 - 10
	SP	No.1	8 - 0	12 - 9	17 - 1	-	12 - 3	16 - 4	-	11 - 8	15 - 5	-	11 - 3	14 - 6	-	10 - 4	13 - 4
	SP	No.2	-	11 - 8	15 - 0	-	10 - 10	14 - 0	-	10 - 2	13 - 2	-	9 - 7	12 - 4	-	8 - 10	11 - 4
	SP	No.3	-	8 - 8	11 - 1	-	8 - 1	10 - 4	-	-	9 - 8	-	-	9 - 1	-	-	8 - 5
	SP	Stud	-	8 - 8	11 - 1	-	8 - 1	10 - 4	-	-	9 - 8	-	-	9 - 1	-	-	8 - 5
	SP	Standard	-	-	-	-	-	-	-	-	-	-	-	-	-	-	-
	SPF	SS	7 - 9	12 - 6	16 - 8	-	11 - 11	15 - 11	-	11 - 5	15 - 3	-	11 - 0	14 - 8	-	10 - 5	13 - 11
	SPF	No.1	-	12 - 2	16 - 1	-	11 - 8	15 - 0	-	10 - 11	14 - 1	-	10 - 3	13 - 3	-	9 - 5	12 - 2
	SPF	No.2	-	12 - 2	16 - 1	-	11 - 8	15 - 0	-	10 - 11	14 - 1	-	10 - 3	13 - 3	-	9 - 5	12 - 2
	SPF	No.3/Stud	-	9 - 3	11 - 11	-	8 - 8	11 - 1	-	8 - 1	10 - 5	-	-	9 - 10	-	-	9 - 0
	SPF	Standard	-	-	-	-	-	-	-	-	-	-	-	-	-	-	-

See Table 3.20A footnotes.

Copyright © American Wood Council. Downloaded/printed pursuant to License Agreement. No reproduction or transfer authorized.

Table 3.20A5 Maximum Exterior Loadbearing[1] and Non-Loadbearing Stud Lengths for Common Lumber Species Resisting Interior Zone Wind Loads - Stud Deflection Limit = H/240

Exposure C H/240

(Fully Sheathed with a Minimum Sheathing Material)[a]

Wind Speed 3-second gust (mph) (See Figure 1.1)			90			95			100			105		
Stud Spacing (in.)	Species	Grade	2x4	2x6	2x8	2x4	2x6	2x8	2x4	2x6	2x8	2x4	2x6	2x8
			Maximum Allowable Stud Length (ft-in.)[1]											
12	DFL	SS	13 - 11	20-0†	20-0†	13 - 5	20-0†	20-0†	12 - 11	20-0†	20-0†	12 - 6	20-0†	20-0†
	DFL	No.1	13 - 4	20-0†	20-0†	12 - 11	20-0†	20-0†	12 - 5	20 - 0	20-0†	12 - 0	19 - 3	20-0†
	DFL	No.2	13 - 1	20-0†	20-0†	12 - 7	20-0†	20-0†	12 - 2	19 - 6	20-0†	11 - 9	18 - 11	20-0†
	DFL	No.3/Stud	12 - 6	20-0†	20-0†	12 - 0	19 - 4	20-0†	11 - 7	18 - 8	20-0†	11 - 3	18 - 0	20-0†
	DFL	Standard	12 - 6	-	-	12 - 0	-	-	11 - 7	-	-	11 - 3	-	-
	HF	SS	13 - 1	20-0†	20-0†	12 - 7	20-0†	20-0†	12 - 2	19 - 6	20-0†	11 - 9	18 - 11	20-0†
	HF	No.1	12 - 10	20-0†	20-0†	12 - 4	19 - 10	20-0†	11 - 11	19 - 1	20-0†	11 - 6	18 - 6	20-0†
	HF	No.2	12 - 2	19 - 7	20-0†	11 - 9	18 - 10	20-0†	11 - 4	18 - 2	20-0†	10 - 11	17 - 7	20-0†
	HF	No.3/Stud	11 - 10	19 - 0	20-0†	11 - 5	18 - 4	20-0†	11 - 0	17 - 8	20-0†	10 - 8	17 - 1	20-0†
	HF	Standard	11 - 10	-	-	11 - 5	-	-	11 - 0	-	-	10 - 8	-	-
	SP	SS	13 - 8	20-0†	20-0†	13 - 2	20-0†	20-0†	12 - 8	20-0†	20-0†	12 - 3	19 - 8	20-0†
	SP	No.1	13 - 1	20-0†	20-0†	12 - 7	20-0†	20-0†	12 - 2	19 - 6	20-0†	11 - 9	18 - 11	20-0†
	SP	No.2	12 - 6	20-0†	20-0†	12 - 0	19 - 4	20-0†	11 - 7	18 - 8	20-0†	11 - 3	18 - 0	20-0†
	SP	No.3	12 - 2	19 - 7	20-0†	11 - 9	18 - 10	20-0†	11 - 4	18 - 2	20-0†	10 - 11	17 - 7	20-0†
	SP	Stud	12 - 2	19 - 7	20-0†	11 - 9	18 - 10	20-0†	11 - 4	18 - 2	20-0†	10 - 11	17 - 7	20-0†
	SP	Standard	11 - 10	-	-	11 - 5	-	-	10 - 9	-	-	10 - 3	-	-
	SPF	SS	12 - 10	20-0†	20-0†	12 - 4	19 - 10	20-0†	11 - 11	19 - 1	20-0†	11 - 6	18 - 6	20-0†
	SPF	No.1	12 - 6	20-0†	20-0†	12 - 0	19 - 4	20-0†	11 - 7	18 - 8	20-0†	11 - 3	18 - 0	20-0†
	SPF	No.2	12 - 6	20-0†	20-0†	12 - 0	19 - 4	20-0†	11 - 7	18 - 8	20-0†	11 - 3	18 - 0	20-0†
	SPF	No.3/Stud	11 - 10	19 - 0	20-0†	11 - 5	18 - 4	20-0†	11 - 0	17 - 8	20-0†	10 - 8	17 - 1	20-0†
	SPF	Standard	11 - 10	-	-	11 - 5	-	-	11 - 0	-	-	10 - 8	-	-
16	DFL	SS	12 - 7	20-0†	20-0†	12 - 1	19 - 5	20-0†	11 - 8	18 - 9	20-0†	11 - 4	18 - 2	20-0†
	DFL	No.1	12 - 1	19 - 5	20-0†	11 - 8	18 - 8	20-0†	11 - 3	18 - 1	20-0†	10 - 10	17 - 5	20-0†
	DFL	No.2	11 - 10	19 - 0	20-0†	11 - 5	18 - 4	20-0†	11 - 0	17 - 8	20-0†	10 - 8	17 - 1	20-0†
	DFL	No.3/Stud	11 - 4	18 - 2	20-0†	10 - 11	17 - 6	20-0†	10 - 6	16 - 10	20-0†	10 - 2	16 - 4	20-0†
	DFL	Standard	11 - 4	-	-	10 - 10	-	-	10 - 3	-	-	9 - 9	-	-
	HF	SS	11 - 10	19 - 0	20-0†	11 - 5	18 - 4	20-0†	11 - 0	17 - 8	20-0†	10 - 8	17 - 1	20-0†
	HF	No.1	11 - 7	18 - 7	20-0†	11 - 2	17 - 11	20-0†	10 - 9	17 - 3	20-0†	10 - 5	16 - 8	20-0†
	HF	No.2	11 - 0	17 - 8	20-0†	10 - 7	17 - 0	20-0†	10 - 3	16 - 5	20-0†	9 - 11	15 - 11	20-0†
	HF	No.3/Stud	10 - 9	17 - 2	20-0†	10 - 4	16 - 7	20-0†	10 - 0	16 - 0	20-0†	9 - 7	15 - 5	20-0†
	HF	Standard	10 - 9	-	-	10 - 4	-	-	10 - 0	-	-	9 - 6	-	-
	SP	SS	12 - 4	19 - 10	20-0†	11 - 11	19 - 1	20-0†	11 - 6	18 - 5	20-0†	11 - 1	17 - 10	20-0†
	SP	No.1	11 - 10	19 - 0	20-0†	11 - 5	18 - 4	20-0†	11 - 0	17 - 8	20-0†	10 - 8	17 - 1	20-0†
	SP	No.2	11 - 4	18 - 2	20-0†	10 - 11	17 - 6	20-0†	10 - 6	16 - 10	20-0†	10 - 2	16 - 4	20-0†
	SP	No.3	11 - 0	17 - 8	20-0†	10 - 7	17 - 0	20-0†	10 - 3	16 - 5	20-0†	9 - 11	15 - 9	20-0†
	SP	Stud	11 - 0	17 - 8	20-0†	10 - 7	17 - 0	20-0†	10 - 3	16 - 5	20-0†	9 - 11	15 - 9	20-0†
	SP	Standard	10 - 4	-	-	9 - 9	-	-	9 - 3	-	-	8 - 9	-	-
	SPF	SS	11 - 7	18 - 7	20-0†	11 - 2	17 - 11	20-0†	10 - 9	17 - 3	20-0†	10 - 5	16 - 8	20-0†
	SPF	No.1	11 - 4	18 - 2	20-0†	10 - 11	17 - 6	20-0†	10 - 6	16 - 10	20-0†	10 - 2	16 - 4	20-0†
	SPF	No.2	11 - 4	18 - 2	20-0†	10 - 11	17 - 6	20-0†	10 - 6	16 - 10	20-0†	10 - 2	16 - 4	20-0†
	SPF	No.3/Stud	10 - 9	17 - 2	20-0†	10 - 4	16 - 7	20-0†	10 - 0	16 - 0	20-0†	9 - 7	15 - 5	20-0†
	SPF	Standard	10 - 9	-	-	10 - 4	-	-	10 - 0	-	-	9 - 6	-	-
24	DFL	SS	10 - 11	17 - 6	20-0†	10 - 6	16 - 11	20-0†	10 - 2	16 - 3	20-0†	9 - 10	15 - 9	20-0†
	DFL	No.1	10 - 6	16 - 10	20-0†	10 - 1	16 - 3	20-0†	9 - 9	15 - 8	20-0†	9 - 5	15 - 2	20-0†
	DFL	No.2	10 - 3	16 - 6	20-0†	9 - 11	15 - 11	20-0†	9 - 7	15 - 4	20-0†	9 - 3	14 - 10	19 - 10
	DFL	No.3/Stud	9 - 10	15 - 9	20-0†	9 - 5	15 - 2	20 - 0	9 - 1	14 - 8	18 - 11	8 - 10	13 - 11	17 - 11
	DFL	Standard	9 - 3	-	-	8 - 8	-	-	8 - 3	-	-	7 - 10	-	-
	HF	SS	10 - 3	16 - 6	20-0†	9 - 11	15 - 11	20-0†	9 - 7	15 - 4	20-0†	9 - 3	14 - 10	19 - 10
	HF	No.1	10 - 1	16 - 2	20-0†	9 - 8	15 - 6	20-0†	9 - 4	15 - 0	20-0†	9 - 0	14 - 6	19 - 4
	HF	No.2	9 - 7	15 - 4	20-0†	9 - 3	14 - 9	19 - 9	8 - 11	14 - 3	19 - 1	8 - 7	13 - 9	18 - 5
	HF	No.3/Stud	9 - 4	14 - 11	19 - 11	9 - 0	14 - 4	19 - 2	8 - 8	13 - 10	18 - 5	8 - 4	13 - 5	17 - 5
	HF	Standard	9 - 0	-	-	8 - 6	-	-	8 - 1	-	-	-	-	-
	SP	SS	10 - 9	17 - 2	20-0†	10 - 4	16 - 7	20-0†	10 - 0	16 - 0	20-0†	9 - 7	15 - 5	20-0†
	SP	No.1	10 - 3	16 - 6	20-0†	9 - 11	15 - 11	20-0†	9 - 7	15 - 4	20-0†	9 - 3	14 - 10	19 - 10
	SP	No.2	9 - 10	15 - 9	20-0†	9 - 5	15 - 2	20-0†	9 - 1	14 - 8	19 - 7	8 - 10	14 - 2	18 - 11
	SP	No.3	9 - 7	15 - 0	19 - 2	9 - 3	14 - 1	18 - 1	8 - 10	13 - 4	17 - 1	8 - 4	12 - 8	16 - 3
	SP	Stud	9 - 7	15 - 0	19 - 2	9 - 3	14 - 1	18 - 1	8 - 10	13 - 4	17 - 1	8 - 4	12 - 8	16 - 3
	SP	Standard	8 - 4	-	-	7 - 10	-	-	-	-	-	-	-	-
	SPF	SS	10 - 1	16 - 2	20-0†	9 - 8	15 - 6	20-0†	9 - 4	15 - 0	20-0†	9 - 0	14 - 6	19 - 4
	SPF	No.1	9 - 10	15 - 9	20-0†	9 - 5	15 - 2	20-0†	9 - 1	14 - 8	19 - 7	8 - 10	14 - 2	18 - 11
	SPF	No.2	9 - 10	15 - 9	20-0†	9 - 5	15 - 2	20-0†	9 - 1	14 - 8	19 - 7	8 - 10	14 - 2	18 - 11
	SPF	No.3/Stud	9 - 4	14 - 11	19 - 11	9 - 0	14 - 4	19 - 2	8 - 8	13 - 10	18 - 5	8 - 4	13 - 5	17 - 5
	SPF	Standard	9 - 0	-	-	8 - 6	-	-	8 - 1	-	-	-	-	-

See Table 3.20A footnotes.

Copyright © American Wood Council. Downloaded/printed pursuant to License Agreement. No reproduction or transfer authorized.

Table 3.20A5 (Cont.) **Maximum Exterior Loadbearing[1] and Non-Loadbearing Stud Lengths for Common Lumber Species Resisting Interior Zone Wind Loads - Stud Deflection Limit = H/240**

Exposure C H/240

(Fully Sheathed with a Minimum Sheathing Material)[a]

Wind Speed 3-second gust (mph) (See Figure 1.1)			110			115			120			130			140		
Stud Spacing (in.)	Species	Grade	2x4	2x6	2x8	2x4	2x6	2x8	2x4	2x6	2x8	2x4	2x6	2x8	2x4	2x6	2x8
			Maximum Allowable Stud Length (ft-in.)[1]														
12	DFL	SS	12 - 1	19 - 5	20-0†	11 - 9	18 - 10	20-0†	11 - 5	18 - 3	20-0†	10 - 9	17 - 3	20-0†	10 - 3	16 - 5	20-0†
	DFL	No.1	11 - 8	18 - 8	20-0†	11 - 3	18 - 1	20-0†	10 - 11	17 - 7	20-0†	10 - 4	16 - 7	20-0†	9 - 10	15 - 9	20-0†
	DFL	No.2	11 - 5	18 - 3	20-0†	11 - 0	17 - 9	20-0†	10 - 9	17 - 2	20-0†	10 - 2	16 - 3	20-0†	9 - 7	15 - 5	20-0†
	DFL	No.3/Stud	10 - 10	17 - 5	20-0†	10 - 6	16 - 11	20-0†	10 - 3	16 - 5	20-0†	9 - 8	15 - 6	20-0†	9 - 2	14 - 9	19 - 1
	DFL	Standard	10 - 9	-	-	10 - 3	-	-	9 - 10	-	-	9 - 0	-	-	8 - 4	-	-
	HF	SS	11 - 5	18 - 3	20-0†	11 - 0	17 - 9	20-0†	10 - 9	17 - 2	20-0†	10 - 2	16 - 3	20-0†	9 - 7	15 - 5	20-0†
	HF	No.1	11 - 2	17 - 10	20-0†	10 - 9	17 - 4	20-0†	10 - 6	16 - 10	20-0†	9 - 11	15 - 11	20-0†	9 - 5	15 - 1	20-0†
	HF	No.2	10 - 7	17 - 0	20-0†	10 - 3	16 - 6	20-0†	10 - 0	16 - 0	20-0†	9 - 5	15 - 1	20-0†	9 - 0	14 - 4	19 - 2
	HF	No.3/Stud	10 - 4	16 - 6	20-0†	10 - 0	16 - 0	20-0†	9 - 8	15 - 7	20-0†	9 - 2	14 - 8	19 - 8	8 - 8	14 - 0	18 - 7
	HF	Standard	10 - 4	-	-	10 - 0	-	-	9 - 7	-	-	8 - 10	-	-	8 - 2	-	-
	SP	SS	11 - 10	19 - 1	20-0†	11 - 6	18 - 6	20-0†	11 - 2	17 - 11	20-0†	10 - 7	16 - 11	20-0†	10 - 0	16 - 1	20-0†
	SP	No.1	11 - 5	18 - 3	20-0†	11 - 0	17 - 9	20-0†	10 - 9	17 - 2	20-0†	10 - 2	16 - 3	20-0†	9 - 7	15 - 5	20-0†
	SP	No.2	10 - 10	17 - 5	20-0†	10 - 6	16 - 11	20-0†	10 - 3	16 - 5	20-0†	9 - 8	15 - 6	20-0†	9 - 2	14 - 9	19 - 8
	SP	No.3	10 - 7	17 - 0	20-0†	10 - 3	16 - 6	20-0†	10 - 0	15 - 11	20-0†	9 - 5	14 - 8	18 - 9	8 - 11	13 - 6	17 - 4
	SP	Stud	10 - 7	17 - 0	20-0†	10 - 3	16 - 6	20-0†	10 - 0	15 - 11	20-0†	9 - 5	14 - 8	18 - 9	8 - 11	13 - 6	17 - 4
	SP	Standard	9 - 9	-	-	9 - 3	-	-	8 - 10	-	-	8 - 2	-	-	-	-	-
	SPF	SS	11 - 2	17 - 10	20-0†	10 - 9	17 - 4	20-0†	10 - 6	16 - 10	20-0†	9 - 11	15 - 11	20-0†	9 - 5	15 - 1	20-0†
	SPF	No.1	10 - 10	17 - 5	20-0†	10 - 6	16 - 11	20-0†	10 - 3	16 - 5	20-0†	9 - 8	15 - 6	20-0†	9 - 2	14 - 9	19 - 8
	SPF	No.2	10 - 10	17 - 5	20-0†	10 - 6	16 - 11	20-0†	10 - 3	16 - 5	20-0†	9 - 8	15 - 6	20-0†	9 - 2	14 - 9	19 - 8
	SPF	No.3/Stud	10 - 4	16 - 6	20-0†	10 - 0	16 - 0	20-0†	9 - 8	15 - 7	20-0†	9 - 2	14 - 8	19 - 8	8 - 8	14 - 0	18 - 7
	SPF	Standard	10 - 4	-	-	10 - 0	-	-	9 - 7	-	-	8 - 10	-	-	8 - 2	-	-
16	DFL	SS	10 - 11	17 - 7	20-0†	10 - 7	17 - 0	20-0†	10 - 3	16 - 6	20-0†	9 - 9	15 - 7	20-0†	9 - 3	14 - 10	19 - 10
	DFL	No.1	10 - 6	16 - 11	20-0†	10 - 2	16 - 4	20-0†	9 - 11	15 - 11	20-0†	9 - 4	15 - 0	20-0†	8 - 11	14 - 3	19 - 1
	DFL	No.2	10 - 4	16 - 6	20-0†	10 - 0	16 - 0	20-0†	9 - 8	15 - 7	20-0†	9 - 2	14 - 8	19 - 8	8 - 8	14 - 0	18 - 8
	DFL	No.3/Stud	9 - 10	15 - 9	20-0†	9 - 6	15 - 4	20-0†	9 - 3	14 - 10	19 - 4	8 - 9	13 - 9	17 - 9	8 - 4	12 - 8	16 - 4
	DFL	Standard	9 - 3	-	-	8 - 10	-	-	8 - 5	-	-	-	-	-	-	-	-
	HF	SS	10 - 4	16 - 6	20-0†	10 - 0	16 - 0	20-0†	9 - 8	15 - 7	20-0†	9 - 2	14 - 8	19 - 8	8 - 8	14 - 0	18 - 8
	HF	No.1	10 - 1	16 - 2	20-0†	9 - 9	15 - 8	20-0†	9 - 6	15 - 2	20-0†	9 - 0	14 - 5	19 - 3	8 - 6	13 - 8	18 - 3
	HF	No.2	9 - 7	15 - 4	20-0†	9 - 3	14 - 11	19 - 11	9 - 0	14 - 6	19 - 4	8 - 6	13 - 8	18 - 3	8 - 1	13 - 0	17 - 4
	HF	No.3/Stud	9 - 4	14 - 11	20 - 0	9 - 0	14 - 6	19 - 4	8 - 9	14 - 1	18 - 9	8 - 4	13 - 4	17 - 3	7 - 11	12 - 4	15 - 11
	HF	Standard	9 - 0	-	-	8 - 7	-	-	8 - 3	-	-	-	-	-	-	-	-
	SP	SS	10 - 9	17 - 3	20-0†	10 - 5	16 - 8	20-0†	10 - 1	16 - 2	20-0†	9 - 7	15 - 4	20-0†	9 - 1	14 - 7	19 - 5
	SP	No.1	10 - 4	16 - 6	20-0†	10 - 0	16 - 0	20-0†	9 - 8	15 - 7	20-0†	9 - 2	14 - 8	19 - 8	8 - 8	14 - 0	18 - 8
	SP	No.2	9 - 10	15 - 9	20-0†	9 - 6	15 - 4	20-0†	9 - 3	14 - 10	19 - 10	8 - 9	14 - 0	18 - 9	8 - 4	13 - 4	17 - 10
	SP	No.3	9 - 7	15 - 0	19 - 3	9 - 3	14 - 4	18 - 4	9 - 0	13 - 8	17 - 6	8 - 3	12 - 6	16 - 1	-	11 - 7	14 - 10
	SP	Stud	9 - 7	15 - 0	19 - 3	9 - 3	14 - 4	18 - 4	9 - 0	13 - 8	17 - 6	8 - 3	12 - 6	16 - 1	-	11 - 7	14 - 10
	SP	Standard	8 - 4	-	-	8 - 0	-	-	-	-	-	-	-	-	-	-	-
	SPF	SS	10 - 1	16 - 2	20-0†	9 - 9	15 - 8	20-0†	9 - 6	15 - 2	20-0†	9 - 0	14 - 5	19 - 3	8 - 6	13 - 8	18 - 3
	SPF	No.1	9 - 10	15 - 9	20-0†	9 - 6	15 - 4	20-0†	9 - 3	14 - 10	19 - 10	8 - 9	14 - 0	18 - 9	8 - 4	13 - 4	17 - 10
	SPF	No.2	9 - 10	15 - 9	20-0†	9 - 6	15 - 4	20-0†	9 - 3	14 - 10	19 - 10	8 - 9	14 - 0	18 - 9	8 - 4	13 - 4	17 - 10
	SPF	No.3/Stud	9 - 4	14 - 11	20 - 0	9 - 0	14 - 6	19 - 4	8 - 9	14 - 1	18 - 9	8 - 4	13 - 4	17 - 3	7 - 11	12 - 4	15 - 11
	SPF	Standard	9 - 0	-	-	8 - 7	-	-	8 - 3	-	-	-	-	-	-	-	-
24	DFL	SS	9 - 6	15 - 3	20-0†	9 - 2	14 - 9	19 - 9	8 - 11	14 - 4	19 - 2	8 - 5	13 - 7	18 - 1	8 - 0	12 - 10	17 - 2
	DFL	No.1	9 - 2	14 - 8	19 - 7	8 - 10	14 - 2	19 - 0	8 - 7	13 - 9	18 - 5	8 - 2	13 - 0	17 - 5	-	12 - 5	16 - 6
	DFL	No.2	8 - 11	14 - 4	19 - 2	8 - 8	13 - 11	18 - 7	8 - 5	13 - 6	18 - 0	8 - 0	12 - 9	17 - 1	-	12 - 1	16 - 2
	DFL	No.3/Stud	8 - 6	13 - 3	17 - 1	8 - 3	12 - 7	16 - 3	8 - 0	12 - 1	15 - 6	-	11 - 1	14 - 3	-	10 - 3	13 - 2
	DFL	Standard	-	-	-	-	-	-	-	-	-	-	-	-	-	-	-
	HF	SS	8 - 11	14 - 4	19 - 2	8 - 8	13 - 11	18 - 7	8 - 5	13 - 6	18 - 0	8 - 0	12 - 9	17 - 1	-	12 - 1	16 - 2
	HF	No.1	8 - 9	14 - 0	18 - 9	8 - 6	13 - 7	18 - 2	8 - 3	13 - 2	17 - 8	7 - 9	12 - 6	16 - 8	-	11 - 10	15 - 10
	HF	No.2	8 - 4	13 - 4	17 - 10	8 - 1	12 - 11	17 - 3	7 - 10	12 - 7	16 - 9	-	11 - 10	15 - 10	-	11 - 3	15 - 1
	HF	No.3/Stud	8 - 1	12 - 11	16 - 7	7 - 10	12 - 3	15 - 10	-	11 - 9	15 - 2	-	10 - 9	13 - 11	-	10 - 0	12 - 10
	HF	Standard	-	-	-	-	-	-	-	-	-	-	-	-	-	-	-
	SP	SS	9 - 4	14 - 11	20 - 0	9 - 0	14 - 6	19 - 4	8 - 9	14 - 1	18 - 9	8 - 4	13 - 4	17 - 9	7 - 11	12 - 8	16 - 10
	SP	No.1	8 - 11	14 - 4	19 - 2	8 - 8	13 - 11	18 - 7	8 - 5	13 - 6	18 - 0	8 - 0	12 - 9	17 - 1	-	12 - 1	16 - 2
	SP	No.2	8 - 6	13 - 8	18 - 3	8 - 3	13 - 3	17 - 9	8 - 0	12 - 11	17 - 3	-	12 - 2	16 - 3	-	11 - 7	15 - 5
	SP	No.3	7 - 11	12 - 1	15 - 5	-	11 - 6	14 - 9	-	11 - 0	14 - 1	-	10 - 1	12 - 11	-	9 - 4	11 - 11
	SP	Stud	7 - 11	12 - 1	15 - 5	-	11 - 6	14 - 9	-	11 - 0	14 - 1	-	10 - 1	12 - 11	-	9 - 4	11 - 11
	SP	Standard	-	-	-	-	-	-	-	-	-	-	-	-	-	-	-
	SPF	SS	8 - 9	14 - 0	18 - 9	8 - 6	13 - 7	18 - 2	8 - 3	13 - 2	17 - 8	7 - 9	12 - 6	16 - 8	-	11 - 10	15 - 10
	SPF	No.1	8 - 6	13 - 8	18 - 3	8 - 3	13 - 3	17 - 9	8 - 0	12 - 11	17 - 3	-	12 - 2	16 - 3	-	11 - 7	15 - 5
	SPF	No.2	8 - 6	13 - 8	18 - 3	8 - 3	13 - 3	17 - 9	8 - 0	12 - 11	17 - 3	-	12 - 2	16 - 3	-	11 - 7	15 - 5
	SPF	No.3/Stud	8 - 1	12 - 11	16 - 7	7 - 10	12 - 3	15 - 10	-	11 - 9	15 - 2	-	10 - 9	13 - 11	-	10 - 0	12 - 10
	SPF	Standard	-	-	-	-	-	-	-	-	-	-	-	-	-	-	-

See Table 3.20A footnotes.

Copyright © American Wood Council. Downloaded/printed pursuant to License Agreement. No reproduction or transfer authorized.

Table 3.20A5 (Cont.) Maximum Exterior Loadbearing[1] and Non-Loadbearing Stud Lengths for Common Lumber Species Resisting Interior Zone Wind Loads - Stud Deflection Limit = H/240

Exposure C H/240

(Fully Sheathed with a Minimum Sheathing Material)[a]

Wind Speed 3-second gust (mph) (See Figure 1.1)			150			160			170			180			195		
Stud Spacing (in.)	Species	Grade	2x4	2x6	2x8	2x4	2x6	2x8	2x4	2x6	2x8	2x4	2x6	2x8	2x4	2x6	2x8
			Maximum Allowable Stud Length (ft-in.)[1]														
12	DFL	SS	9 - 9	15 - 8	20-0†	9 - 4	14 - 11	20 - 0	8 - 11	14 - 4	19 - 2	8 - 7	13 - 9	18 - 5	8 - 1	13 - 0	17 - 5
	DFL	No.1	9 - 4	15 - 0	20-0†	9 - 0	14 - 4	19 - 2	8 - 7	13 - 9	18 - 5	8 - 3	13 - 3	17 - 8	7 - 10	12 - 6	16 - 9
	DFL	No.2	9 - 2	14 - 9	19 - 8	8 - 9	14 - 1	18 - 9	8 - 5	13 - 6	18 - 0	8 - 1	13 - 0	17 - 4	-	12 - 3	16 - 4
	DFL	No.3/Stud	8 - 9	13 - 9	17 - 9	8 - 4	12 - 10	16 - 6	8 - 0	12 - 0	15 - 6	-	11 - 4	14 - 7	-	10 - 5	13 - 5
	DFL	Standard	-	-	-	-	-	-	-	-	-	-	-	-	-	-	-
	HF	SS	9 - 2	14 - 9	19 - 8	8 - 9	14 - 1	18 - 9	8 - 5	13 - 6	18 - 0	8 - 1	13 - 0	17 - 4	-	12 - 3	16 - 4
	HF	No.1	9 - 0	14 - 5	19 - 3	8 - 7	13 - 9	18 - 4	8 - 3	13 - 2	17 - 7	7 - 11	12 - 8	16 - 11	-	12 - 0	16 - 0
	HF	No.2	8 - 6	13 - 8	18 - 3	8 - 2	13 - 1	17 - 6	7 - 10	12 - 6	16 - 9	-	12 - 1	16 - 1	-	11 - 5	15 - 3
	HF	No.3/Stud	8 - 4	13 - 4	17 - 3	7 - 11	12 - 6	16 - 1	-	11 - 9	15 - 1	-	11 - 0	14 - 2	-	10 - 1	13 - 0
	HF	Standard	-	-	-	-	-	-	-	-	-	-	-	-	-	-	-
	SP	SS	9 - 7	15 - 4	20-0†	9 - 2	14 - 8	19 - 7	8 - 9	14 - 1	18 - 9	8 - 5	13 - 6	18 - 0	8 - 0	12 - 9	17 - 1
	SP	No.1	9 - 2	14 - 9	19 - 8	8 - 9	14 - 1	18 - 9	8 - 5	13 - 6	18 - 0	8 - 1	13 - 0	17 - 4	-	12 - 3	16 - 4
	SP	No.2	8 - 9	14 - 1	18 - 9	8 - 4	13 - 5	17 - 11	8 - 0	12 - 10	17 - 2	-	12 - 4	16 - 6	-	11 - 8	15 - 7
	SP	No.3	8 - 3	12 - 7	16 - 1	-	11 - 9	15 - 0	-	11 - 0	14 - 1	-	10 - 4	13 - 3	-	9 - 6	12 - 2
	SP	Stud	8 - 3	12 - 7	16 - 1	-	11 - 9	15 - 0	-	11 - 0	14 - 1	-	10 - 4	13 - 3	-	9 - 6	12 - 2
	SP	Standard	-	-	-	-	-	-	-	-	-	-	-	-	-	-	-
	SPF	SS	9 - 0	14 - 5	19 - 3	8 - 7	13 - 9	18 - 4	8 - 3	13 - 2	17 - 7	7 - 11	12 - 8	16 - 11	-	12 - 0	16 - 0
	SPF	No.1	8 - 9	14 - 1	18 - 9	8 - 4	13 - 5	17 - 11	8 - 0	12 - 10	17 - 2	-	12 - 4	16 - 6	-	11 - 8	15 - 7
	SPF	No.2	8 - 9	14 - 1	18 - 9	8 - 4	13 - 5	17 - 11	8 - 0	12 - 10	17 - 2	-	12 - 4	16 - 6	-	11 - 8	15 - 7
	SPF	No.3/Stud	8 - 4	13 - 4	17 - 3	7 - 11	12 - 6	16 - 1	-	11 - 9	15 - 1	-	11 - 0	14 - 2	-	10 - 1	13 - 0
	SPF	Standard	-	-	-	-	-	-	-	-	-	-	-	-	-	-	-
16	DFL	SS	8 - 10	14 - 2	18 - 11	8 - 5	13 - 6	18 - 1	8 - 1	12 - 11	17 - 4	7 - 9	12 - 5	16 - 7	-	11 - 9	15 - 9
	DFL	No.1	8 - 6	13 - 7	18 - 2	8 - 1	13 - 0	17 - 4	7 - 9	12 - 5	16 - 8	-	12 - 0	16 - 0	-	11 - 4	15 - 1
	DFL	No.2	8 - 4	13 - 4	17 - 9	7 - 11	12 - 9	17 - 0	-	12 - 2	16 - 3	-	11 - 9	15 - 8	-	11 - 1	14 - 10
	DFL	No.3/Stud	7 - 10	11 - 10	15 - 2	-	11 - 0	14 - 2	-	10 - 4	13 - 3	-	9 - 8	12 - 6	-	8 - 11	11 - 6
	DFL	Standard	-	-	-	-	-	-	-	-	-	-	-	-	-	-	-
	HF	SS	8 - 4	13 - 4	17 - 9	7 - 11	12 - 9	17 - 0	-	12 - 2	16 - 3	-	11 - 9	15 - 8	-	11 - 1	14 - 10
	HF	No.1	8 - 1	13 - 0	17 - 5	7 - 9	12 - 5	16 - 7	-	11 - 11	15 - 11	-	11 - 6	15 - 4	-	10 - 10	14 - 6
	HF	No.2	-	12 - 5	16 - 6	-	11 - 10	15 - 10	-	11 - 4	15 - 2	-	10 - 11	14 - 7	-	10 - 4	13 - 9
	HF	No.3/Stud	-	11 - 6	14 - 10	-	10 - 9	13 - 10	-	10 - 1	12 - 11	-	9 - 5	12 - 2	-	8 - 8	11 - 2
	HF	Standard	-	-	-	-	-	-	-	-	-	-	-	-	-	-	-
	SP	SS	8 - 8	13 - 10	18 - 6	8 - 3	13 - 3	17 - 8	7 - 11	12 - 8	17 - 0	-	12 - 3	16 - 4	-	11 - 7	15 - 5
	SP	No.1	8 - 4	13 - 4	17 - 9	7 - 11	12 - 9	17 - 0	-	12 - 2	16 - 3	-	11 - 9	15 - 8	-	11 - 1	14 - 10
	SP	No.2	7 - 11	12 - 8	17 - 0	-	12 - 2	16 - 3	-	11 - 8	15 - 7	-	11 - 2	14 - 11	-	10 - 7	14 - 1
	SP	No.3	-	10 - 9	13 - 9	-	10 - 0	12 - 10	-	9 - 5	12 - 1	-	8 - 10	11 - 4	-	8 - 2	10 - 5
	SP	Stud	-	10 - 9	13 - 9	-	10 - 0	12 - 10	-	9 - 5	12 - 1	-	8 - 10	11 - 4	-	8 - 2	10 - 5
	SP	Standard	-	-	-	-	-	-	-	-	-	-	-	-	-	-	-
	SPF	SS	8 - 1	13 - 0	17 - 5	7 - 9	12 - 5	16 - 7	-	11 - 11	15 - 11	-	11 - 6	15 - 4	-	10 - 10	14 - 6
	SPF	No.1	7 - 11	12 - 8	17 - 0	-	12 - 2	16 - 3	-	11 - 8	15 - 7	-	11 - 2	14 - 11	-	10 - 7	14 - 2
	SPF	No.2	7 - 11	12 - 8	17 - 0	-	12 - 2	16 - 3	-	11 - 8	15 - 7	-	11 - 2	14 - 11	-	10 - 7	14 - 2
	SPF	No.3/Stud	-	11 - 6	14 - 10	-	10 - 9	13 - 10	-	10 - 1	12 - 11	-	9 - 5	12 - 2	-	8 - 8	11 - 2
	SPF	Standard	-	-	-	-	-	-	-	-	-	-	-	-	-	-	-
24	DFL	SS	-	12 - 3	16 - 5	-	11 - 9	15 - 8	-	11 - 3	15 - 0	-	10 - 10	14 - 5	-	10 - 3	13 - 8
	DFL	No.1	-	11 - 10	15 - 9	-	11 - 3	15 - 1	-	10 - 10	14 - 5	-	10 - 5	13 - 11	-	9 - 10	13 - 0
	DFL	No.2	-	11 - 7	15 - 5	-	11 - 1	14 - 9	-	10 - 7	14 - 2	-	10 - 2	13 - 5	-	9 - 7	12 - 4
	DFL	No.3/Stud	-	9 - 6	12 - 3	-	8 - 10	11 - 5	-	8 - 4	10 - 8	-	7 - 10	10 - 1	-	-	9 - 3
	DFL	Standard	-	-	-	-	-	-	-	-	-	-	-	-	-	-	-
	HF	SS	-	11 - 7	15 - 5	-	11 - 1	14 - 9	-	10 - 7	14 - 2	-	10 - 2	13 - 7	-	9 - 7	12 - 10
	HF	No.1	-	11 - 4	15 - 1	-	10 - 10	14 - 5	-	10 - 4	13 - 10	-	9 - 11	13 - 3	-	9 - 5	12 - 7
	HF	No.2	-	10 - 9	14 - 4	-	10 - 3	13 - 9	-	9 - 10	13 - 2	-	9 - 6	12 - 8	-	9 - 0	11 - 11
	HF	No.3/Stud	-	9 - 3	11 - 11	-	8 - 8	11 - 1	-	8 - 1	10 - 5	-	-	9 - 10	-	-	9 - 0
	HF	Standard	-	-	-	-	-	-	-	-	-	-	-	-	-	-	-
	SP	SS	-	12 - 0	16 - 1	-	11 - 6	15 - 4	-	11 - 0	14 - 9	-	10 - 7	14 - 2	-	10 - 0	13 - 5
	SP	No.1	-	11 - 7	15 - 5	-	11 - 1	14 - 9	-	10 - 7	14 - 2	-	10 - 2	13 - 7	-	9 - 7	12 - 10
	SP	No.2	-	11 - 0	14 - 9	-	10 - 7	14 - 0	-	10 - 1	13 - 2	-	9 - 7	12 - 4	-	8 - 10	11 - 4
	SP	No.3	-	8 - 8	11 - 1	-	8 - 1	10 - 4	-	-	9 - 8	-	-	9 - 1	-	-	8 - 5
	SP	Stud	-	8 - 8	11 - 1	-	8 - 1	10 - 4	-	-	9 - 8	-	-	9 - 1	-	-	8 - 5
	SP	Standard	-	-	-	-	-	-	-	-	-	-	-	-	-	-	-
	SPF	SS	-	11 - 4	15 - 1	-	10 - 10	14 - 5	-	10 - 4	13 - 10	-	9 - 11	13 - 3	-	9 - 5	12 - 7
	SPF	No.1	-	11 - 0	14 - 9	-	10 - 7	14 - 1	-	10 - 1	13 - 6	-	9 - 9	13 - 0	-	9 - 2	12 - 2
	SPF	No.2	-	11 - 0	14 - 9	-	10 - 7	14 - 1	-	10 - 1	13 - 6	-	9 - 9	13 - 0	-	9 - 2	12 - 2
	SPF	No.3/Stud	-	9 - 3	11 - 11	-	8 - 8	11 - 1	-	8 - 1	10 - 5	-	-	9 - 10	-	-	9 - 0
	SPF	Standard	-	-	-	-	-	-	-	-	-	-	-	-	-	-	-

See Table 3.20A footnotes.

Copyright © American Wood Council. Downloaded/printed pursuant to License Agreement. No reproduction or transfer authorized.

Table 3.20A6 Maximum Exterior Loadbearing[1] and Non-Loadbearing Stud Lengths for Common Lumber Species Resisting Interior Zone Wind Loads - Stud Deflection Limit = H/360

Exposure C H/360

(Fully Sheathed with a Minimum Sheathing Material)[a]

Wind Speed 3-second gust (mph) (See Figure 1.1)			90			95			100			105		
Stud Spacing (in.)	Species	Grade	2x4	2x6	2x8	2x4	2x6	2x8	2x4	2x6	2x8	2x4	2x6	2x8
			Maximum Allowable Stud Length (ft-in.)[1]											
12	DFL	SS	12 - 1	19 - 5	20-0†	11 - 7	18 - 8	20-0†	11 - 3	18 - 0	20-0†	10 - 10	17 - 5	20-0†
	DFL	No.1	11 - 7	18 - 8	20-0†	11 - 2	18 - 0	20-0†	10 - 9	17 - 4	20-0†	10 - 5	16 - 9	20-0†
	DFL	No.2	11 - 4	18 - 3	20-0†	10 - 11	17 - 7	20-0†	10 - 7	17 - 0	20-0†	10 - 3	16 - 5	20-0†
	DFL	No.3/Stud	10 - 10	17 - 5	20-0†	10 - 5	16 - 9	20-0†	10 - 1	16 - 2	20-0†	9 - 9	15 - 8	20-0†
	DFL	Standard	10 - 10	-	-	10 - 5	-	-	10 - 1	-	-	9 - 9	-	-
	HF	SS	11 - 4	18 - 3	20-0†	10 - 11	17 - 7	20-0†	10 - 7	17 - 0	20-0†	10 - 3	16 - 5	20-0†
	HF	No.1	11 - 1	17 - 10	20-0†	10 - 8	17 - 2	20-0†	10 - 4	16 - 7	20-0†	10 - 0	16 - 0	20-0†
	HF	No.2	10 - 7	17 - 0	20-0†	10 - 2	16 - 4	20-0†	9 - 10	15 - 9	20-0†	9 - 6	15 - 3	20-0†
	HF	No.3/Stud	10 - 3	16 - 6	20-0†	9 - 11	15 - 11	20-0†	9 - 7	15 - 4	20-0†	9 - 3	14 - 10	19 - 10
	HF	Standard	10 - 3	-	-	9 - 11	-	-	9 - 7	-	-	9 - 3	-	-
	SP	SS	11 - 10	19 - 0	20-0†	11 - 5	18 - 4	20-0†	11 - 0	17 - 8	20-0†	10 - 8	17 - 1	20-0†
	SP	No.1	11 - 4	18 - 3	20-0†	10 - 11	17 - 7	20-0†	10 - 7	17 - 0	20-0†	10 - 3	16 - 5	20-0†
	SP	No.2	10 - 10	17 - 5	20-0†	10 - 5	16 - 9	20-0†	10 - 1	16 - 2	20-0†	9 - 9	15 - 8	20-0†
	SP	No.3	10 - 7	17 - 0	20-0†	10 - 2	16 - 4	20-0†	9 - 10	15 - 9	20-0†	9 - 6	15 - 3	20-0†
	SP	Stud	10 - 7	17 - 0	20-0†	10 - 2	16 - 4	20-0†	9 - 10	15 - 9	20-0†	9 - 6	15 - 3	20-0†
	SP	Standard	10 - 3	-	-	9 - 11	-	-	9 - 7	-	-	9 - 3	-	-
	SPF	SS	11 - 1	17 - 10	20-0†	10 - 8	17 - 2	20-0†	10 - 4	16 - 7	20-0†	10 - 0	16 - 0	20-0†
	SPF	No.1	10 - 10	17 - 5	20-0†	10 - 5	16 - 9	20-0†	10 - 1	16 - 2	20-0†	9 - 9	15 - 8	20-0†
	SPF	No.2	10 - 10	17 - 5	20-0†	10 - 5	16 - 9	20-0†	10 - 1	16 - 2	20-0†	9 - 9	15 - 8	20-0†
	SPF	No.3/Stud	10 - 3	16 - 6	20-0†	9 - 11	15 - 11	20-0†	9 - 7	15 - 4	20-0†	9 - 3	14 - 10	19 - 10
	SPF	Standard	10 - 3	-	-	9 - 11	-	-	9 - 7	-	-	9 - 3	-	-
16	DFL	SS	10 - 11	17 - 6	20-0†	10 - 6	16 - 11	20-0†	10 - 2	16 - 3	20-0†	9 - 10	15 - 9	20-0†
	DFL	No.1	10 - 6	16 - 10	20-0†	10 - 1	16 - 3	20-0†	9 - 9	15 - 8	20-0†	9 - 5	15 - 2	20-0†
	DFL	No.2	10 - 3	16 - 6	20-0†	9 - 11	15 - 11	20-0†	9 - 7	15 - 4	20-0†	9 - 3	14 - 10	19 - 10
	DFL	No.3/Stud	9 - 10	15 - 9	20-0†	9 - 5	15 - 2	20-0†	9 - 1	14 - 8	19 - 7	8 - 10	14 - 2	18 - 11
	DFL	Standard	9 - 10	-	-	9 - 5	-	-	9 - 1	-	-	8 - 10	-	-
	HF	SS	10 - 3	16 - 6	20-0†	9 - 11	15 - 11	20-0†	9 - 7	15 - 4	20-0†	9 - 3	14 - 10	19 - 10
	HF	No.1	10 - 1	16 - 2	20-0†	9 - 8	15 - 6	20-0†	9 - 4	15 - 0	20-0†	9 - 0	14 - 6	19 - 4
	HF	No.2	9 - 7	15 - 4	20-0†	9 - 3	14 - 9	19 - 9	8 - 11	14 - 3	19 - 1	8 - 7	13 - 9	18 - 5
	HF	No.3/Stud	9 - 4	14 - 11	19 - 11	9 - 0	14 - 4	19 - 2	8 - 8	13 - 10	18 - 6	8 - 4	13 - 5	17 - 11
	HF	Standard	9 - 4	-	-	9 - 0	-	-	8 - 8	-	-	8 - 4	-	-
	SP	SS	10 - 9	17 - 2	20-0†	10 - 4	16 - 7	20-0†	10 - 0	16 - 0	20-0†	9 - 7	15 - 5	20-0†
	SP	No.1	10 - 3	16 - 6	20-0†	9 - 11	15 - 11	20-0†	9 - 7	15 - 4	20-0†	9 - 3	14 - 10	19 - 10
	SP	No.2	9 - 10	15 - 9	20-0†	9 - 5	15 - 2	20-0†	9 - 1	14 - 8	19 - 7	8 - 10	14 - 2	18 - 11
	SP	No.3	9 - 7	15 - 4	20-0†	9 - 3	14 - 9	19 - 9	8 - 11	14 - 3	19 - 1	8 - 7	13 - 9	18 - 5
	SP	Stud	9 - 7	15 - 4	20-0†	9 - 3	14 - 9	19 - 9	8 - 11	14 - 3	19 - 1	8 - 7	13 - 9	18 - 5
	SP	Standard	9 - 4	-	-	9 - 0	-	-	8 - 8	-	-	8 - 4	-	-
	SPF	SS	10 - 1	16 - 2	20-0†	9 - 8	15 - 6	20-0†	9 - 4	15 - 0	20-0†	9 - 0	14 - 6	19 - 4
	SPF	No.1	9 - 10	15 - 9	20-0†	9 - 5	15 - 2	20-0†	9 - 1	14 - 8	19 - 7	8 - 10	14 - 2	18 - 11
	SPF	No.2	9 - 10	15 - 9	20-0†	9 - 5	15 - 2	20-0†	9 - 1	14 - 8	19 - 7	8 - 10	14 - 2	18 - 11
	SPF	No.3/Stud	9 - 4	14 - 11	19 - 11	9 - 0	14 - 4	19 - 2	8 - 8	13 - 10	18 - 6	8 - 4	13 - 5	17 - 11
	SPF	Standard	9 - 4	-	-	9 - 0	-	-	8 - 8	-	-	8 - 4	-	-
24	DFL	SS	9 - 6	15 - 3	20-0†	9 - 2	14 - 8	19 - 7	8 - 10	14 - 2	18 - 11	8 - 6	13 - 8	18 - 3
	DFL	No.1	9 - 1	14 - 8	19 - 7	8 - 9	14 - 1	18 - 10	8 - 6	13 - 7	18 - 2	8 - 2	13 - 2	17 - 7
	DFL	No.2	8 - 11	14 - 4	19 - 2	8 - 7	13 - 10	18 - 5	8 - 4	13 - 4	17 - 9	8 - 0	12 - 10	17 - 2
	DFL	No.3/Stud	8 - 6	13 - 8	18 - 3	8 - 3	13 - 2	17 - 7	7 - 11	12 - 8	17 - 0	-	12 - 3	16 - 5
	DFL	Standard	8 - 6	-	-	8 - 3	-	-	7 - 11	-	-	-	-	-
	HF	SS	8 - 11	14 - 4	19 - 2	8 - 7	13 - 10	18 - 5	8 - 4	13 - 4	17 - 9	8 - 0	12 - 10	17 - 2
	HF	No.1	8 - 9	14 - 0	18 - 9	8 - 5	13 - 6	18 - 0	8 - 1	13 - 0	17 - 5	7 - 10	12 - 7	16 - 10
	HF	No.2	8 - 4	13 - 4	17 - 10	8 - 0	12 - 10	17 - 2	-	12 - 5	16 - 6	-	12 - 0	16 - 0
	HF	No.3/Stud	8 - 1	13 - 0	17 - 4	7 - 9	12 - 6	16 - 8	-	12 - 0	16 - 1	-	11 - 8	15 - 6
	HF	Standard	8 - 1	-	-	7 - 9	-	-	-	-	-	-	-	-
	SP	SS	9 - 4	14 - 11	19 - 11	9 - 0	14 - 4	19 - 2	8 - 8	13 - 10	18 - 6	8 - 4	13 - 5	17 - 11
	SP	No.1	8 - 11	14 - 4	19 - 2	8 - 7	13 - 10	18 - 5	8 - 4	13 - 4	17 - 9	8 - 0	12 - 10	17 - 2
	SP	No.2	8 - 6	13 - 8	18 - 3	8 - 3	13 - 2	17 - 7	7 - 11	12 - 8	17 - 0	-	12 - 3	16 - 5
	SP	No.3	8 - 4	13 - 4	17 - 10	8 - 0	12 - 10	17 - 2	-	12 - 5	16 - 6	-	12 - 0	16 - 0
	SP	Stud	8 - 4	13 - 4	17 - 10	8 - 0	12 - 10	17 - 2	-	12 - 5	16 - 6	-	12 - 0	16 - 0
	SP	Standard	8 - 1	-	-	7 - 9	-	-	-	-	-	-	-	-
	SPF	SS	8 - 9	14 - 0	18 - 9	8 - 5	13 - 6	18 - 0	8 - 1	13 - 0	17 - 5	7 - 10	12 - 7	16 - 10
	SPF	No.1	8 - 6	13 - 8	18 - 3	8 - 3	13 - 2	17 - 7	7 - 11	12 - 8	17 - 0	-	12 - 3	16 - 5
	SPF	No.2	8 - 6	13 - 8	18 - 3	8 - 3	13 - 2	17 - 7	7 - 11	12 - 8	17 - 0	-	12 - 3	16 - 5
	SPF	No.3/Stud	8 - 1	13 - 0	17 - 4	7 - 9	12 - 6	16 - 8	-	12 - 0	16 - 1	-	11 - 8	15 - 6
	SPF	Standard	8 - 1	-	-	7 - 9	-	-	-	-	-	-	-	-

See Table 3.20A footnotes.

Copyright © American Wood Council. Downloaded/printed pursuant to License Agreement. No reproduction or transfer authorized.

Table 3.20A6 (Cont.) Maximum Exterior Loadbearing[1] and Non-Loadbearing Stud Lengths for Common Lumber Species Resisting Interior Zone Wind Loads - Stud Deflection Limit = H/360

Exposure C H/360

(Fully Sheathed with a Minimum Sheathing Material)[a]

Wind Speed 3-second gust (mph) (See Figure 1.1)			110			115			120			130			140		
Stud Spacing (in.)	Species	Grade	2x4	2x6	2x8	2x4	2x6	2x8	2x4	2x6	2x8	2x4	2x6	2x8	2x4	2x6	2x8
			Maximum Allowable Stud Length (ft-in.)[1]														
12	DFL	SS	10 - 6	16 - 10	20-0†	10 - 2	16 - 4	20-0†	9 - 11	15 - 10	20-0†	9 - 4	15 - 0	20-0†	8 - 10	14 - 3	19 - 0
	DFL	No.1	10 - 1	16 - 2	20-0†	9 - 9	15 - 8	20-0†	9 - 6	15 - 3	20-0†	9 - 0	14 - 5	19 - 3	8 - 6	13 - 8	18 - 3
	DFL	No.2	9 - 11	15 - 10	20-0†	9 - 7	15 - 5	20-0†	9 - 4	14 - 11	19 - 11	8 - 10	14 - 1	18 - 10	8 - 4	13 - 5	17 - 11
	DFL	No.3/Stud	9 - 5	15 - 2	20-0†	9 - 2	14 - 8	19 - 7	8 - 11	14 - 3	19 - 0	8 - 5	13 - 6	18 - 0	8 - 0	12 - 10	17 - 1
	DFL	Standard	9 - 5	-	-	9 - 2	-	-	8 - 11	-	-	8 - 5	-	-	8 - 0	-	-
	HF	SS	9 - 11	15 - 10	20-0†	9 - 7	15 - 5	20-0†	9 - 4	14 - 11	19 - 11	8 - 10	14 - 1	18 - 10	8 - 4	13 - 5	17 - 11
	HF	No.1	9 - 8	15 - 6	20-0†	9 - 4	15 - 0	20-0†	9 - 1	14 - 7	19 - 6	8 - 7	13 - 10	18 - 5	8 - 2	13 - 1	17 - 6
	HF	No.2	9 - 2	14 - 9	19 - 9	8 - 11	14 - 4	19 - 1	8 - 8	13 - 11	18 - 7	8 - 2	13 - 2	17 - 6	7 - 9	12 - 6	16 - 8
	HF	No.3/Stud	8 - 11	14 - 4	19 - 2	8 - 8	13 - 11	18 - 7	8 - 5	13 - 6	18 - 0	8 - 0	12 - 9	17 - 1	-	12 - 1	16 - 2
	HF	Standard	8 - 11	-	-	8 - 8	-	-	8 - 5	-	-	8 - 0	-	-	-	-	-
	SP	SS	10 - 4	16 - 6	20-0†	10 - 0	16 - 0	20-0†	9 - 8	15 - 7	20-0†	9 - 2	14 - 8	19 - 8	8 - 8	14 - 0	18 - 8
	SP	No.1	9 - 11	15 - 10	20-0†	9 - 7	15 - 5	20-0†	9 - 4	14 - 11	19 - 11	8 - 10	14 - 1	18 - 10	8 - 4	13 - 5	17 - 11
	SP	No.2	9 - 5	15 - 2	20-0†	9 - 2	14 - 8	19 - 7	8 - 11	14 - 3	19 - 0	8 - 5	13 - 6	18 - 0	8 - 0	12 - 10	17 - 1
	SP	No.3	9 - 2	14 - 9	19 - 9	8 - 11	14 - 4	19 - 1	8 - 8	13 - 11	18 - 7	8 - 2	13 - 2	17 - 6	7 - 9	12 - 6	16 - 8
	SP	Stud	9 - 2	14 - 9	19 - 9	8 - 11	14 - 4	19 - 1	8 - 8	13 - 11	18 - 7	8 - 2	13 - 2	17 - 6	7 - 9	12 - 6	16 - 8
	SP	Standard	8 - 11	-	-	8 - 8	-	-	8 - 5	-	-	8 - 0	-	-	-	-	-
	SPF	SS	9 - 8	15 - 6	20-0†	9 - 4	15 - 0	20-0†	9 - 1	14 - 7	19 - 6	8 - 7	13 - 10	18 - 5	8 - 2	13 - 1	17 - 6
	SPF	No.1	9 - 5	15 - 2	20-0†	9 - 2	14 - 8	19 - 7	8 - 11	14 - 3	19 - 0	8 - 5	13 - 6	18 - 0	8 - 0	12 - 10	17 - 1
	SPF	No.2	9 - 5	15 - 2	20-0†	9 - 2	14 - 8	19 - 7	8 - 11	14 - 3	19 - 0	8 - 5	13 - 6	18 - 0	8 - 0	12 - 10	17 - 1
	SPF	No.3/Stud	8 - 11	14 - 4	19 - 2	8 - 8	13 - 11	18 - 7	8 - 5	13 - 6	18 - 0	8 - 0	12 - 9	17 - 1	-	12 - 1	16 - 2
	SPF	Standard	8 - 11	-	-	8 - 8	-	-	8 - 5	-	-	8 - 0	-	-	-	-	-
16	DFL	SS	9 - 6	15 - 3	20-0†	9 - 2	14 - 9	19 - 9	8 - 11	14 - 4	19 - 2	8 - 5	13 - 7	18 - 1	8 - 0	12 - 10	17 - 2
	DFL	No.1	9 - 2	14 - 8	19 - 7	8 - 10	14 - 2	19 - 0	8 - 7	13 - 9	18 - 5	8 - 2	13 - 0	17 - 5	-	12 - 5	16 - 6
	DFL	No.2	8 - 11	14 - 4	19 - 2	8 - 8	13 - 11	18 - 7	8 - 5	13 - 6	18 - 0	8 - 0	12 - 9	17 - 1	-	12 - 1	16 - 2
	DFL	No.3/Stud	8 - 6	13 - 8	18 - 3	8 - 3	13 - 3	17 - 9	8 - 0	12 - 11	17 - 3	-	12 - 2	16 - 3	-	11 - 7	15 - 5
	DFL	Standard	8 - 6	-	-	8 - 3	-	-	8 - 0	-	-	-	-	-	-	-	-
	HF	SS	8 - 11	14 - 4	19 - 2	8 - 8	13 - 11	18 - 7	8 - 5	13 - 6	18 - 0	8 - 0	12 - 9	17 - 1	-	12 - 1	16 - 2
	HF	No.1	8 - 9	14 - 0	18 - 9	8 - 6	13 - 7	18 - 2	8 - 3	13 - 2	17 - 8	7 - 9	12 - 6	16 - 8	-	11 - 10	15 - 10
	HF	No.2	8 - 4	13 - 4	17 - 10	8 - 1	12 - 11	17 - 3	7 - 10	12 - 7	16 - 9	-	11 - 10	15 - 10	-	11 - 3	15 - 1
	HF	No.3/Stud	8 - 1	13 - 0	17 - 4	7 - 10	12 - 7	16 - 10	-	12 - 3	16 - 4	-	11 - 7	15 - 5	-	11 - 0	14 - 8
	HF	Standard	8 - 1	-	-	7 - 10	-	-	-	-	-	-	-	-	-	-	-
	SP	SS	9 - 4	14 - 11	20 - 0	9 - 0	14 - 6	19 - 4	8 - 9	14 - 1	18 - 9	8 - 4	13 - 4	17 - 9	7 - 11	12 - 8	16 - 10
	SP	No.1	8 - 11	14 - 4	19 - 2	8 - 8	13 - 11	18 - 7	8 - 5	13 - 6	18 - 0	8 - 0	12 - 9	17 - 1	-	12 - 1	16 - 2
	SP	No.2	8 - 6	13 - 8	18 - 3	8 - 3	13 - 3	17 - 9	8 - 0	12 - 11	17 - 3	-	12 - 2	16 - 3	-	11 - 7	15 - 5
	SP	No.3	8 - 4	13 - 4	17 - 10	8 - 1	12 - 11	17 - 3	7 - 10	12 - 7	16 - 9	-	11 - 10	15 - 10	-	11 - 3	14 - 10
	SP	Stud	8 - 4	13 - 4	17 - 10	8 - 1	12 - 11	17 - 3	7 - 10	12 - 7	16 - 9	-	11 - 10	15 - 10	-	11 - 3	14 - 10
	SP	Standard	8 - 1	-	-	7 - 10	-	-	-	-	-	-	-	-	-	-	-
	SPF	SS	8 - 9	14 - 0	18 - 9	8 - 6	13 - 7	18 - 2	8 - 3	13 - 2	17 - 8	7 - 9	12 - 6	16 - 8	-	11 - 10	15 - 10
	SPF	No.1	8 - 6	13 - 8	18 - 3	8 - 3	13 - 3	17 - 9	8 - 0	12 - 11	17 - 3	-	12 - 2	16 - 3	-	11 - 7	15 - 5
	SPF	No.2	8 - 6	13 - 8	18 - 3	8 - 3	13 - 3	17 - 9	8 - 0	12 - 11	17 - 3	-	12 - 2	16 - 3	-	11 - 7	15 - 5
	SPF	No.3/Stud	8 - 1	13 - 0	17 - 4	7 - 10	12 - 7	16 - 10	-	12 - 3	16 - 4	-	11 - 7	15 - 5	-	11 - 0	14 - 8
	SPF	Standard	8 - 1	-	-	7 - 10	-	-	-	-	-	-	-	-	-	-	-
24	DFL	SS	8 - 3	13 - 3	17 - 8	8 - 0	12 - 10	17 - 1	7 - 9	12 - 5	16 - 7	-	11 - 9	15 - 9	-	11 - 2	14 - 11
	DFL	No.1	7 - 11	12 - 9	17 - 0	-	12 - 4	16 - 6	-	12 - 0	16 - 0	-	11 - 4	15 - 1	-	10 - 9	14 - 4
	DFL	No.2	7 - 9	12 - 5	16 - 8	-	12 - 1	16 - 1	-	11 - 9	15 - 8	-	11 - 1	14 - 10	-	10 - 6	14 - 1
	DFL	No.3/Stud	-	11 - 11	15 - 10	-	11 - 6	15 - 5	-	11 - 2	14 - 11	-	10 - 7	14 - 2	-	10 - 1	13 - 2
	DFL	Standard	-	-	-	-	-	-	-	-	-	-	-	-	-	-	-
	HF	SS	7 - 9	12 - 5	16 - 8	-	12 - 1	16 - 1	-	11 - 9	15 - 8	-	11 - 1	14 - 10	-	10 - 6	14 - 1
	HF	No.1	-	12 - 2	16 - 3	-	11 - 10	15 - 9	-	11 - 6	15 - 4	-	10 - 10	14 - 6	-	10 - 3	13 - 9
	HF	No.2	-	11 - 7	15 - 6	-	11 - 3	15 - 0	-	10 - 11	14 - 7	-	10 - 4	13 - 9	-	9 - 9	13 - 1
	HF	No.3/Stud	-	11 - 3	15 - 1	-	10 - 11	14 - 7	-	10 - 7	14 - 2	-	10 - 0	13 - 5	-	9 - 6	12 - 9
	HF	Standard	-	-	-	-	-	-	-	-	-	-	-	-	-	-	-
	SP	SS	8 - 1	13 - 0	17 - 4	7 - 10	12 - 7	16 - 10	-	12 - 3	16 - 4	-	11 - 7	15 - 5	-	11 - 0	14 - 8
	SP	No.1	7 - 9	12 - 5	16 - 8	-	12 - 1	16 - 1	-	11 - 9	15 - 8	-	11 - 1	14 - 10	-	10 - 6	14 - 1
	SP	No.2	-	11 - 11	15 - 10	-	11 - 6	15 - 5	-	11 - 2	14 - 11	-	10 - 7	14 - 2	-	10 - 1	13 - 5
	SP	No.3	-	11 - 7	15 - 5	-	11 - 3	14 - 9	-	10 - 11	14 - 1	-	10 - 1	12 - 11	-	9 - 4	11 - 11
	SP	Stud	-	11 - 7	15 - 5	-	11 - 3	14 - 9	-	10 - 11	14 - 1	-	10 - 1	12 - 11	-	9 - 4	11 - 11
	SP	Standard	-	-	-	-	-	-	-	-	-	-	-	-	-	-	-
	SPF	SS	-	12 - 2	16 - 3	-	11 - 10	15 - 9	-	11 - 6	15 - 4	-	10 - 10	14 - 6	-	10 - 3	13 - 9
	SPF	No.1	-	11 - 11	15 - 10	-	11 - 6	15 - 5	-	11 - 2	14 - 11	-	10 - 7	14 - 2	-	10 - 1	13 - 5
	SPF	No.2	-	11 - 11	15 - 10	-	11 - 6	15 - 5	-	11 - 2	14 - 11	-	10 - 7	14 - 2	-	10 - 1	13 - 5
	SPF	No.3/Stud	-	11 - 3	15 - 1	-	10 - 11	14 - 7	-	10 - 7	14 - 2	-	10 - 0	13 - 5	-	9 - 6	12 - 9
	SPF	Standard	-	-	-	-	-	-	-	-	-	-	-	-	-	-	-

See Table 3.20A footnotes.

Copyright © American Wood Council. Downloaded/printed pursuant to License Agreement. No reproduction or transfer authorized.

Table 3.20A6 (Cont.) Maximum Exterior Loadbearing[1] and Non-Loadbearing Stud Lengths for Common Lumber Species Resisting Interior Zone Wind Loads - Stud Deflection Limit = H/360

Exposure C H/360

(Fully Sheathed with a Minimum Sheathing Material)[a]

Wind Speed 3-second gust (mph) (See Figure 1.1)			150			160			170			180			195		
Stud Spacing (in.)	Species	Grade	2x4	2x6	2x8	2x4	2x6	2x8	2x4	2x6	2x8	2x4	2x6	2x8	2x4	2x6	2x8
			Maximum Allowable Stud Length (ft-in.)[1]														
12	DFL	SS	8 - 5	13 - 7	18 - 1	8 - 1	13 - 0	17 - 4	7 - 9	12 - 5	16 - 7	-	11 - 11	15 - 11	-	11 - 4	15 - 1
	DFL	No.1	8 - 2	13 - 1	17 - 5	7 - 9	12 - 6	16 - 8	-	12 - 0	16 - 0	-	11 - 6	15 - 4	-	10 - 10	14 - 6
	DFL	No.2	8 - 0	12 - 9	17 - 1	-	12 - 3	16 - 4	-	11 - 8	15 - 8	-	11 - 3	15 - 0	-	10 - 8	14 - 2
	DFL	No.3/Stud	-	12 - 2	16 - 3	-	11 - 8	15 - 7	-	11 - 2	14 - 11	-	10 - 9	14 - 4	-	10 - 2	13 - 5
	DFL	Standard	-	-	-	-	-	-	-	-	-	-	-	-	-	-	-
	HF	SS	8 - 0	12 - 9	17 - 1	-	12 - 3	16 - 4	-	11 - 8	15 - 8	-	11 - 3	15 - 0	-	10 - 8	14 - 2
	HF	No.1	7 - 9	12 - 6	16 - 8	-	11 - 11	15 - 11	-	11 - 5	15 - 3	-	11 - 0	14 - 8	-	10 - 5	13 - 11
	HF	No.2	-	11 - 11	15 - 10	-	11 - 4	15 - 2	-	10 - 11	14 - 6	-	10 - 6	14 - 0	-	9 - 11	13 - 3
	HF	No.3/Stud	-	11 - 7	15 - 5	-	11 - 1	14 - 9	-	10 - 7	14 - 2	-	10 - 2	13 - 7	-	9 - 7	12 - 10
	HF	Standard	-	-	-	-	-	-	-	-	-	-	-	-	-	-	-
	SP	SS	8 - 4	13 - 4	17 - 9	7 - 11	12 - 9	17 - 0	-	12 - 2	16 - 3	-	11 - 9	15 - 8	-	11 - 1	14 - 10
	SP	No.1	8 - 0	12 - 9	17 - 1	-	12 - 3	16 - 4	-	11 - 8	15 - 8	-	11 - 3	15 - 0	-	10 - 8	14 - 2
	SP	No.2	-	12 - 2	16 - 3	-	11 - 8	15 - 7	-	11 - 2	14 - 11	-	10 - 9	14 - 4	-	10 - 2	13 - 7
	SP	No.3	-	11 - 11	15 - 10	-	11 - 4	15 - 0	-	10 - 11	14 - 1	-	10 - 4	13 - 3	-	9 - 6	12 - 2
	SP	Stud	-	11 - 11	15 - 10	-	11 - 4	15 - 0	-	10 - 11	14 - 1	-	10 - 4	13 - 3	-	9 - 6	12 - 2
	SP	Standard	-	-	-	-	-	-	-	-	-	-	-	-	-	-	-
	SPF	SS	7 - 9	12 - 6	16 - 8	-	11 - 11	15 - 11	-	11 - 5	15 - 3	-	11 - 0	14 - 8	-	10 - 5	13 - 11
	SPF	No.1	-	12 - 2	16 - 3	-	11 - 8	15 - 7	-	11 - 2	14 - 11	-	10 - 9	14 - 4	-	10 - 2	13 - 7
	SPF	No.2	-	12 - 2	16 - 3	-	11 - 8	15 - 7	-	11 - 2	14 - 11	-	10 - 9	14 - 4	-	10 - 2	13 - 7
	SPF	No.3/Stud	-	11 - 7	15 - 5	-	11 - 1	14 - 9	-	10 - 7	14 - 2	-	10 - 2	13 - 7	-	9 - 7	12 - 10
	SPF	Standard	-	-	-	-	-	-	-	-	-	-	-	-	-	-	-
16	DFL	SS	-	12 - 3	16 - 5	-	11 - 9	15 - 8	-	11 - 3	15 - 0	-	10 - 10	14 - 5	-	10 - 3	13 - 8
	DFL	No.1	-	11 - 10	15 - 9	-	11 - 3	15 - 1	-	10 - 10	14 - 5	-	10 - 5	13 - 11	-	9 - 10	13 - 1
	DFL	No.2	-	11 - 7	15 - 5	-	11 - 1	14 - 9	-	10 - 7	14 - 2	-	10 - 2	13 - 7	-	9 - 7	12 - 10
	DFL	No.3/Stud	-	11 - 0	14 - 9	-	10 - 7	14 - 1	-	10 - 1	13 - 3	-	9 - 8	12 - 6	-	8 - 11	11 - 6
	DFL	Standard	-	-	-	-	-	-	-	-	-	-	-	-	-	-	-
	HF	SS	-	11 - 7	15 - 5	-	11 - 1	14 - 9	-	10 - 7	14 - 2	-	10 - 2	13 - 7	-	9 - 7	12 - 10
	HF	No.1	-	11 - 4	15 - 1	-	10 - 10	14 - 5	-	10 - 4	13 - 10	-	9 - 11	13 - 3	-	9 - 5	12 - 7
	HF	No.2	-	10 - 9	14 - 4	-	10 - 3	13 - 9	-	9 - 10	13 - 2	-	9 - 6	12 - 8	-	9 - 0	11 - 11
	HF	No.3/Stud	-	10 - 5	14 - 0	-	10 - 0	13 - 4	-	9 - 7	12 - 9	-	9 - 2	12 - 2	-	8 - 8	11 - 2
	HF	Standard	-	-	-	-	-	-	-	-	-	-	-	-	-	-	-
	SP	SS	-	12 - 0	16 - 1	-	11 - 6	15 - 4	-	11 - 0	14 - 9	-	10 - 7	14 - 2	-	10 - 0	13 - 5
	SP	No.1	-	11 - 7	15 - 5	-	11 - 1	14 - 9	-	10 - 7	14 - 2	-	10 - 2	13 - 7	-	9 - 7	12 - 10
	SP	No.2	-	11 - 0	14 - 9	-	10 - 7	14 - 1	-	10 - 1	13 - 6	-	9 - 9	13 - 0	-	9 - 2	12 - 3
	SP	No.3	-	10 - 9	13 - 9	-	10 - 0	12 - 10	-	9 - 5	12 - 1	-	8 - 10	11 - 4	-	8 - 2	10 - 5
	SP	Stud	-	10 - 9	13 - 9	-	10 - 0	12 - 10	-	9 - 5	12 - 1	-	8 - 10	11 - 4	-	8 - 2	10 - 5
	SP	Standard	-	-	-	-	-	-	-	-	-	-	-	-	-	-	-
	SPF	SS	-	11 - 4	15 - 1	-	10 - 10	14 - 5	-	10 - 4	13 - 10	-	9 - 11	13 - 3	-	9 - 5	12 - 7
	SPF	No.1	-	11 - 0	14 - 9	-	10 - 7	14 - 1	-	10 - 1	13 - 6	-	9 - 9	13 - 0	-	9 - 2	12 - 3
	SPF	No.2	-	11 - 0	14 - 9	-	10 - 7	14 - 1	-	10 - 1	13 - 6	-	9 - 9	13 - 0	-	9 - 2	12 - 3
	SPF	No.3/Stud	-	10 - 5	14 - 0	-	10 - 0	13 - 4	-	9 - 7	12 - 9	-	9 - 2	12 - 2	-	8 - 8	11 - 2
	SPF	Standard	-	-	-	-	-	-	-	-	-	-	-	-	-	-	-
24	DFL	SS	-	10 - 8	14 - 3	-	10 - 2	13 - 7	-	9 - 9	13 - 0	-	9 - 5	12 - 6	-	8 - 10	11 - 10
	DFL	No.1	-	10 - 3	13 - 8	-	9 - 10	13 - 1	-	9 - 5	12 - 6	-	9 - 0	12 - 1	-	8 - 6	11 - 5
	DFL	No.2	-	10 - 0	13 - 5	-	9 - 7	12 - 10	-	9 - 2	12 - 3	-	8 - 10	11 - 10	-	8 - 4	11 - 2
	DFL	No.3/Stud	-	9 - 6	12 - 3	-	8 - 10	11 - 5	-	8 - 4	10 - 8	-	7 - 10	10 - 1	-	-	9 - 3
	DFL	Standard	-	-	-	-	-	-	-	-	-	-	-	-	-	-	-
	HF	SS	-	10 - 0	13 - 5	-	9 - 7	12 - 10	-	9 - 2	12 - 3	-	8 - 10	11 - 10	-	8 - 4	11 - 2
	HF	No.1	-	9 - 10	13 - 1	-	9 - 5	12 - 6	-	9 - 0	12 - 0	-	8 - 8	11 - 6	-	8 - 2	10 - 11
	HF	No.2	-	9 - 4	12 - 5	-	8 - 11	11 - 11	-	8 - 7	11 - 5	-	8 - 3	11 - 0	-	7 - 9	10 - 4
	HF	No.3/Stud	-	9 - 1	11 - 11	-	8 - 8	11 - 1	-	8 - 1	10 - 5	-	-	9 - 10	-	-	9 - 0
	HF	Standard	-	-	-	-	-	-	-	-	-	-	-	-	-	-	-
	SP	SS	-	10 - 5	14 - 0	-	10 - 0	13 - 4	-	9 - 7	12 - 9	-	9 - 2	12 - 3	-	8 - 8	11 - 7
	SP	No.1	-	10 - 0	13 - 5	-	9 - 7	12 - 10	-	9 - 2	12 - 3	-	8 - 10	11 - 10	-	8 - 4	11 - 2
	SP	No.2	-	9 - 7	12 - 9	-	9 - 2	12 - 3	-	8 - 9	11 - 9	-	8 - 5	11 - 3	-	8 - 0	10 - 8
	SP	No.3	-	8 - 8	11 - 1	-	8 - 1	10 - 4	-	-	9 - 8	-	-	9 - 1	-	-	8 - 5
	SP	Stud	-	8 - 8	11 - 1	-	8 - 1	10 - 4	-	-	9 - 8	-	-	9 - 1	-	-	8 - 5
	SP	Standard	-	-	-	-	-	-	-	-	-	-	-	-	-	-	-
	SPF	SS	-	9 - 10	13 - 1	-	9 - 5	12 - 6	-	9 - 0	12 - 0	-	8 - 8	11 - 6	-	8 - 2	10 - 11
	SPF	No.1	-	9 - 7	12 - 9	-	9 - 2	12 - 3	-	8 - 9	11 - 9	-	8 - 5	11 - 3	-	8 - 0	10 - 8
	SPF	No.2	-	9 - 7	12 - 9	-	9 - 2	12 - 3	-	8 - 9	11 - 9	-	8 - 5	11 - 3	-	8 - 0	10 - 8
	SPF	No.3/Stud	-	9 - 1	11 - 11	-	8 - 8	11 - 1	-	8 - 1	10 - 5	-	-	9 - 10	-	-	9 - 0
	SPF	Standard	-	-	-	-	-	-	-	-	-	-	-	-	-	-	-

See Table 3.20A footnotes.

Copyright © American Wood Council. Downloaded/printed pursuant to License Agreement. No reproduction or transfer authorized.

Table 3.20A Footnotes

† Allowable stud length exceeds 20 feet.

†† Maximum stud length for 2x4's is limited to 14 feet per Table 3.20C.

- Lumber grade not available or allowable stud length is less than 7 ft - 9 in. (for 8 ft wall height).

a Maximum stud lengths in Table 3.20A are based on interior zone loads and assume that all studs are covered on the inside with a minimum of 1/2 inch gypsum wallboard. To address additional end zone loading requirements, studs within 4 feet of corners shall be sheathed on the exterior side with a minimum of 3/8 inch wood structural panel sheathing or the end zone stud spacings shall be multiplied by 0.80 for framing located within 4 feet of corners to account for the additional end zone loading requirements. The additional bending capacity provided by the wood structural panels or reduced stud spacing is assumed to be sufficient to resist the additional end zone loading requirements.

1 Exterior studs shall be limited to a height between horizontal supports per Table 3.20C. DFL = Douglas Fir-Larch, HF = Hem-Fir, SP = Southern Pine, SPF = Spruce-Pine-Fir.

Copyright © American Wood Council. Downloaded/printed pursuant to License Agreement. No reproduction or transfer authorized.
AMERICAN WOOD COUNCIL

Table 3.20B1 Maximum Exterior Loadbearing[1] and Non-Loadbearing Stud Lengths for Common Lumber Species Resisting Interior Zone Wind Loads - Stud Deflection Limit = H/180

(Fully Sheathed with a Minimum of 3/8" Wood Structural Panels)[a]

Exposure B H/180 3/8" WSP

Wind Speed 3-second gust (mph) (See Figure 1.1)			90			95			100			105		
Stud Spacing (in.)	Species	Grade	2x4	2x6	2x8	2x4	2x6	2x8	2x4	2x6	2x8	2x4	2x6	2x8
			Maximum Allowable Stud Length (ft-in.)[1]											
12	DFL	SS	14-0††	20-0†	20-0†	14-0††	20-0†	20-0†	14-0††	20-0†	20-0†	14-0††	20-0†	20-0†
	DFL	No.1	14-0††	20-0†	20-0†	14-0††	20-0†	20-0†	14-0††	20-0†	20-0†	14-0††	20-0†	20-0†
	DFL	No.2	14-0††	20-0†	20-0†	14-0††	20-0†	20-0†	14-0††	20-0†	20-0†	14-0††	20-0†	20-0†
	DFL	No.3/Stud	14-0††	20-0†	20-0†	14-0††	20-0†	20-0†	14-0††	20-0†	20-0†	14-0††	20-0†	20-0†
	DFL	Standard	14-0††	-	-	14-0††	-	-	14-0††	-	-	14-0††	-	-
	HF	SS	14-0††	20-0†	20-0†	14-0††	20-0†	20-0†	14-0††	20-0†	20-0†	14-0††	20-0†	20-0†
	HF	No.1	14-0††	20-0†	20-0†	14-0††	20-0†	20-0†	14-0††	20-0†	20-0†	14-0††	20-0†	20-0†
	HF	No.2	14-0††	20-0†	20-0†	14-0††	20-0†	20-0†	14-0††	20-0†	20-0†	14-0††	20-0†	20-0†
	HF	No.3/Stud	14-0††	20-0†	20-0†	14-0††	20-0†	20-0†	14-0††	20-0†	20-0†	14-0††	20-0†	20-0†
	HF	Standard	14-0††	-	-	14-0††	-	-	14-0††	-	-	14-0††	-	-
	SP	SS	14-0††	20-0†	20-0†	14-0††	20-0†	20-0†	14-0††	20-0†	20-0†	14-0††	20-0†	20-0†
	SP	No.1	14-0††	20-0†	20-0†	14-0††	20-0†	20-0†	14-0††	20-0†	20-0†	14-0††	20-0†	20-0†
	SP	No.2	14-0††	20-0†	20-0†	14-0††	20-0†	20-0†	14-0††	20-0†	20-0†	14-0††	20-0†	20-0†
	SP	No.3	14-0††	20-0†	20-0†	14-0††	20-0†	20-0†	14-0††	20-0†	20-0†	14-0††	20-0†	20-0†
	SP	Stud	14-0††	20-0†	20-0†	14-0††	20-0†	20-0†	14-0††	20-0†	20-0†	14-0††	20-0†	20-0†
	SP	Standard	14-0††	-	-	14-0††	-	-	14-0††	-	-	14-0††	-	-
	SPF	SS	14-0††	20-0†	20-0†	14-0††	20-0†	20-0†	14-0††	20-0†	20-0†	14-0††	20-0†	20-0†
	SPF	No.1	14-0††	20-0†	20-0†	14-0††	20-0†	20-0†	14-0††	20-0†	20-0†	14-0††	20-0†	20-0†
	SPF	No.2	14-0††	20-0†	20-0†	14-0††	20-0†	20-0†	14-0††	20-0†	20-0†	14-0††	20-0†	20-0†
	SPF	No.3/Stud	14-0††	20-0†	20-0†	14-0††	20-0†	20-0†	14-0††	20-0†	20-0†	14-0††	20-0†	20-0†
	SPF	Standard	14-0††	-	-	14-0††	-	-	14-0††	-	-	14-0††	-	-
16	DFL	SS	14-0††	20-0†	20-0†	14-0††	20-0†	20-0†	14-0††	20-0†	20-0†	14-0††	20-0†	20-0†
	DFL	No.1	14-0††	20-0†	20-0†	14-0††	20-0†	20-0†	14-0††	20-0†	20-0†	14-0††	20-0†	20-0†
	DFL	No.2	14-0††	20-0†	20-0†	14-0††	20-0†	20-0†	14-0††	20-0†	20-0†	14-0††	20-0†	20-0†
	DFL	No.3/Stud	14-0††	20-0†	20-0†	14-0††	20-0†	20-0†	14-0††	20-0†	20-0†	14-0††	20-0†	20-0†
	DFL	Standard	14-0††	-	-	14-0††	-	-	14-0††	-	-	13 - 4	-	-
	HF	SS	14-0††	20-0†	20-0†	14-0††	20-0†	20-0†	14-0††	20-0†	20-0†	14-0††	20-0†	20-0†
	HF	No.1	14-0††	20-0†	20-0†	14-0††	20-0†	20-0†	14-0††	20-0†	20-0†	14-0††	20-0†	20-0†
	HF	No.2	14-0††	20-0†	20-0†	14-0††	20-0†	20-0†	14-0††	20-0†	20-0†	14-0††	20-0†	20-0†
	HF	No.3/Stud	14-0††	20-0†	20-0†	14-0††	20-0†	20-0†	14-0††	20-0†	20-0†	13 - 9	20-0†	20-0†
	HF	Standard	14-0††	-	-	14-0††	-	-	13 - 9	-	-	13 - 0	-	-
	SP	SS	14-0††	20-0†	20-0†	14-0††	20-0†	20-0†	14-0††	20-0†	20-0†	14-0††	20-0†	20-0†
	SP	No.1	14-0††	20-0†	20-0†	14-0††	20-0†	20-0†	14-0††	20-0†	20-0†	14-0††	20-0†	20-0†
	SP	No.2	14-0††	20-0†	20-0†	14-0††	20-0†	20-0†	14-0††	20-0†	20-0†	14-0††	20-0†	20-0†
	SP	No.3	14-0††	20-0†	20-0†	14-0††	20-0†	20-0†	14-0††	20-0†	20-0†	14-0††	20-0†	20-0†
	SP	Stud	14-0††	20-0†	20-0†	14-0††	20-0†	20-0†	14-0††	20-0†	20-0†	14-0††	20-0†	20-0†
	SP	Standard	13 - 6	-	-	13 - 5	-	-	12 - 8	-	-	12 - 1	-	-
	SPF	SS	14-0††	20-0†	20-0†	14-0††	20-0†	20-0†	14-0††	20-0†	20-0†	14-0††	20-0†	20-0†
	SPF	No.1	14-0††	20-0†	20-0†	14-0††	20-0†	20-0†	14-0††	20-0†	20-0†	14-0††	20-0†	20-0†
	SPF	No.2	14-0††	20-0†	20-0†	14-0††	20-0†	20-0†	14-0††	20-0†	20-0†	14-0††	20-0†	20-0†
	SPF	No.3/Stud	14-0††	20-0†	20-0†	14-0††	20-0†	20-0†	14-0††	20-0†	20-0†	13 - 9	20-0†	20-0†
	SPF	Standard	14-0††	-	-	14-0††	-	-	13 - 9	-	-	13 - 0	-	-
24	DFL	SS	14-0††	20-0†	20-0†	14-0††	20-0†	20-0†	14-0††	20-0†	20-0†	14-0††	20-0†	20-0†
	DFL	No.1	14-0††	20-0†	20-0†	14-0††	20-0†	20-0†	13 - 11	20-0†	20-0†	13 - 6	20-0†	20-0†
	DFL	No.2	14-0††	20-0†	20-0†	14-0††	20-0†	20-0†	13 - 8	20-0†	20-0†	13 - 2	20-0†	20-0†
	DFL	No.3/Stud	13 - 6	19 - 8	20-0†	13 - 6	19 - 8	20-0†	13 - 0	19 - 1	20-0†	12 - 7	18 - 1	20-0†
	DFL	Standard	12 - 1	-	-	12 - 0	-	-	11 - 4	-	-	10 - 9	-	-
	HF	SS	14-0††	20-0†	20-0†	14-0††	20-0†	20-0†	13 - 8	20-0†	20-0†	13 - 2	20-0†	20-0†
	HF	No.1	13 - 10	20-0†	20-0†	13 - 10	20-0†	20-0†	13 - 4	20-0†	20-0†	12 - 11	20 - 0	20-0†
	HF	No.2	13 - 2	20-0†	20-0†	13 - 2	20-0†	20-0†	12 - 8	19 - 8	20-0†	12 - 3	19 - 0	20-0†
	HF	No.3/Stud	12 - 10	19 - 2	20-0†	12 - 9	19 - 2	20-0†	12 - 4	18 - 7	20-0†	11 - 11	17 - 7	20-0†
	HF	Standard	11 - 10	-	-	11 - 8	-	-	11 - 1	-	-	10 - 6	-	-
	SP	SS	14-0††	20-0†	20-0†	14-0††	20-0†	20-0†	14-0††	20-0†	20-0†	13 - 9	20-0†	20-0†
	SP	No.1	14-0††	20-0†	20-0†	14-0††	20-0†	20-0†	13 - 8	20-0†	20-0†	13 - 2	20-0†	20-0†
	SP	No.2	13 - 6	20-0†	20-0†	13 - 6	20-0†	20-0†	13 - 0	20-0†	20-0†	12 - 7	19 - 6	20-0†
	SP	No.3	12 - 11	18 - 1	20-0†	12 - 9	18 - 1	20-0†	12 - 1	17 - 5	20-0†	11 - 6	16 - 6	20-0†
	SP	Stud	12 - 11	18 - 1	20-0†	12 - 9	18 - 1	20-0†	12 - 1	17 - 5	20-0†	11 - 6	16 - 6	20-0†
	SP	Standard	11 - 0	-	-	10 - 10	-	-	10 - 3	-	-	9 - 8	-	-
	SPF	SS	13 - 10	20-0†	20-0†	13 - 10	20-0†	20-0†	13 - 4	20-0†	20-0†	12 - 11	20 - 0	20-0†
	SPF	No.1	13 - 6	20-0†	20-0†	13 - 6	20-0†	20-0†	13 - 0	20-0†	20-0†	12 - 7	19 - 6	20-0†
	SPF	No.2	13 - 6	20-0†	20-0†	13 - 6	20-0†	20-0†	13 - 0	20-0†	20-0†	12 - 7	19 - 6	20-0†
	SPF	No.3/Stud	12 - 10	19 - 2	20-0†	12 - 9	19 - 2	20-0†	12 - 4	18 - 7	20-0†	11 - 11	17 - 7	20-0†
	SPF	Standard	11 - 10	-	-	11 - 8	-	-	11 - 1	-	-	10 - 6	-	-

See Table 3.20B footnotes.

Copyright © American Wood Council. Downloaded/printed pursuant to License Agreement. No reproduction or transfer authorized.

Table 3.20B1 (Cont.) **Maximum Exterior Loadbearing[1] and Non-Loadbearing Stud Lengths for Common Lumber Species Resisting Interior Zone Wind Loads - Stud Deflection Limit = H/180**

(Fully Sheathed with a Minimum of 3/8" Wood Structural Panels)[a]

Exposure B H/180 3/8" WSP

Wind Speed 3-second gust (mph) (See Figure 1.1)			110			115			120			130			140		
Stud Spacing (in.)	Species	Grade	2x4	2x6	2x8	2x4	2x6	2x8	2x4	2x6	2x8	2x4	2x6	2x8	2x4	2x6	2x8
			Maximum Allowable Stud Length (ft-in.)[1]														
12	DFL	SS	14-0††	20-0†	20-0†	14-0††	20-0†	20-0†	14-0††	20-0†	20-0†	14-0††	20-0†	20-0†	14-0††	20-0†	20-0†
	DFL	No.1	14-0††	20-0†	20-0†	14-0††	20-0†	20-0†	14-0††	20-0†	20-0†	14-0††	20-0†	20-0†	14-0††	20-0†	20-0†
	DFL	No.2	14-0††	20-0†	20-0†	14-0††	20-0†	20-0†	14-0††	20-0†	20-0†	14-0††	20-0†	20-0†	13 - 9	20-0†	20-0†
	DFL	No.3/Stud	14-0††	20-0†	20-0†	14-0††	20-0†	20-0†	14-0††	20-0†	20-0†	13 - 10	20-0†	20-0†	13 - 1	19 - 3	20-0†
	DFL	Standard	14-0††	-	-	14-0††	-	-	13 - 6	-	-	12 - 5	-	-	11 - 5	-	-
	HF	SS	14-0††	20-0†	20-0†	14-0††	20-0†	20-0†	14-0††	20-0†	20-0†	14-0††	20-0†	20-0†	13 - 9	20-0†	20-0†
	HF	No.1	14-0††	20-0†	20-0†	14-0††	20-0†	20-0†	14-0††	20-0†	20-0†	14-0††	20-0†	20-0†	13 - 5	20-0†	20-0†
	HF	No.2	14-0††	20-0†	20-0†	14-0††	20-0†	20-0†	14-0††	20-0†	20-0†	13 - 5	20-0†	20-0†	12 - 9	19 - 9	20-0†
	HF	No.3/Stud	14-0††	20-0†	20-0†	14-0††	20-0†	20-0†	13 - 10	20-0†	20-0†	13 - 1	20-0†	20-0†	12 - 5	18 - 9	20-0†
	HF	Standard	14-0††	-	-	13 - 10	-	-	13 - 2	-	-	12 - 1	-	-	11 - 2	-	-
	SP	SS	14-0††	20-0†	20-0†	14-0††	20-0†	20-0†	14-0††	20-0†	20-0†	14-0††	20-0†	20-0†	14-0††	20-0†	20-0†
	SP	No.1	14-0††	20-0†	20-0†	14-0††	20-0†	20-0†	14-0††	20-0†	20-0†	14-0††	20-0†	20-0†	13 - 9	20-0†	20-0†
	SP	No.2	14-0††	20-0†	20-0†	14-0††	20-0†	20-0†	14-0††	20-0†	20-0†	13 - 10	20-0†	20-0†	13 - 1	20-0†	20-0†
	SP	No.3	14-0††	20-0†	20-0†	14-0††	20-0†	20-0†	14-0††	20-0†	20-0†	13 - 3	19 - 0	20-0†	12 - 3	17 - 7	20-0†
	SP	Stud	14-0††	20-0†	20-0†	14-0††	20-0†	20-0†	14-0††	20-0†	20-0†	13 - 3	19 - 0	20-0†	12 - 3	17 - 7	20-0†
	SP	Standard	13 - 5	-	-	12 - 9	-	-	12 - 2	-	-	11 - 2	-	-	10 - 4	-	-
	SPF	SS	14-0††	20-0†	20-0†	14-0††	20-0†	20-0†	14-0††	20-0†	20-0†	14-0††	20-0†	20-0†	13 - 5	20-0†	20-0†
	SPF	No.1	14-0††	20-0†	20-0†	14-0††	20-0†	20-0†	14-0††	20-0†	20-0†	13 - 10	20-0†	20-0†	13 - 1	20-0†	20-0†
	SPF	No.2	14-0††	20-0†	20-0†	14-0††	20-0†	20-0†	14-0††	20-0†	20-0†	13 - 10	20-0†	20-0†	13 - 1	20-0†	20-0†
	SPF	No.3/Stud	14-0††	20-0†	20-0†	14-0††	20-0†	20-0†	13 - 10	20-0†	20-0†	13 - 1	20-0†	20-0†	12 - 5	18 - 9	20-0†
	SPF	Standard	14-0††	-	-	13 - 10	-	-	13 - 2	-	-	12 - 1	-	-	11 - 2	-	-
16	DFL	SS	14-0††	20-0†	20-0†	14-0††	20-0†	20-0†	14-0††	20-0†	20-0†	13 - 11	20-0†	20-0†	13 - 2	20-0†	20-0†
	DFL	No.1	14-0††	20-0†	20-0†	14-0††	20-0†	20-0†	14-0††	20-0†	20-0†	13 - 4	20-0†	20-0†	12 - 8	19 - 8	20-0†
	DFL	No.2	14-0††	20-0†	20-0†	14-0††	20-0†	20-0†	13 - 10	20-0†	20-0†	13 - 1	20-0†	20-0†	12 - 5	19 - 3	20-0†
	DFL	No.3/Stud	14-0††	20-0†	20-0†	13 - 7	20-0†	20-0†	13 - 3	19 - 6	20-0†	12 - 6	17 - 10	20-0†	11 - 7	16 - 6	20-0†
	DFL	Standard	12 - 8	-	-	12 - 1	-	-	11 - 7	-	-	10 - 7	-	-	9 - 10	-	-
	HF	SS	14-0††	20-0†	20-0†	14-0††	20-0†	20-0†	13 - 10	20-0†	20-0†	13 - 1	20-0†	20-0†	12 - 5	19 - 3	20-0†
	HF	No.1	14-0††	20-0†	20-0†	13 - 11	20-0†	20-0†	13 - 6	20-0†	20-0†	12 - 10	19 - 10	20-0†	12 - 2	18 - 10	20-0†
	HF	No.2	13 - 8	20-0†	20-0†	13 - 3	20-0†	20-0†	12 - 10	19 - 11	20-0†	12 - 2	18 - 10	20-0†	11 - 7	17 - 11	20-0†
	HF	No.3/Stud	13 - 4	20-0†	20-0†	12 - 11	19 - 10	20-0†	12 - 6	19 - 0	20-0†	11 - 10	17 - 5	20-0†	11 - 3	16 - 1	19 - 11
	HF	Standard	12 - 5	-	-	11 - 10	-	-	11 - 4	-	-	10 - 4	-	-	9 - 7	-	-
	SP	SS	14-0††	20-0†	20-0†	14-0††	20-0†	20-0†	14-0††	20-0†	20-0†	13 - 8	20-0†	20-0†	12 - 11	20-0†	20-0†
	SP	No.1	14-0††	20-0†	20-0†	14-0††	20-0†	20-0†	13 - 10	20-0†	20-0†	13 - 1	20-0†	20-0†	12 - 5	19 - 3	20-0†
	SP	No.2	14-0††	20-0†	20-0†	13 - 7	20-0†	20-0†	13 - 3	20-0†	20-0†	12 - 6	19 - 4	20-0†	11 - 10	18 - 4	20-0†
	SP	No.3	13 - 7	19 - 6	20-0†	12 - 11	18 - 7	20-0†	12 - 4	17 - 9	20-0†	11 - 4	16 - 4	20-0†	10 - 6	15 - 1	18 - 6
	SP	Stud	13 - 7	19 - 6	20-0†	12 - 11	18 - 7	20-0†	12 - 4	17 - 9	20-0†	11 - 4	16 - 4	20-0†	10 - 6	15 - 1	18 - 6
	SP	Standard	11 - 6	-	-	10 - 11	-	-	10 - 5	-	-	9 - 7	-	-	8 - 10	-	-
	SPF	SS	14-0††	20-0†	20-0†	13 - 11	20-0†	20-0†	13 - 6	20-0†	20-0†	12 - 10	19 - 10	20-0†	12 - 2	18 - 10	20-0†
	SPF	No.1	14-0††	20-0†	20-0†	13 - 7	20-0†	20-0†	13 - 3	20-0†	20-0†	12 - 6	19 - 4	20-0†	11 - 10	18 - 4	20-0†
	SPF	No.2	14-0††	20-0†	20-0†	13 - 7	20-0†	20-0†	13 - 3	20-0†	20-0†	12 - 6	19 - 4	20-0†	11 - 10	18 - 4	20-0†
	SPF	No.3/Stud	13 - 4	20-0†	20-0†	12 - 11	19 - 10	20-0†	12 - 6	19 - 0	20-0†	11 - 10	17 - 5	20-0†	11 - 3	16 - 1	19 - 11
	SPF	Standard	12 - 5	-	-	11 - 10	-	-	11 - 4	-	-	10 - 4	-	-	9 - 7	-	-
24	DFL	SS	13 - 7	20-0†	20-0†	13 - 2	20-0†	20-0†	12 - 9	19 - 9	20-0†	12 - 1	18 - 8	20-0†	11 - 5	17 - 9	20-0†
	DFL	No.1	13 - 0	20-0†	20-0†	12 - 8	19 - 7	20-0†	12 - 3	19 - 0	20-0†	11 - 7	18 - 0	20-0†	11 - 0	17 - 1	20-0†
	DFL	No.2	12 - 9	19 - 9	20-0†	12 - 5	19 - 2	20-0†	12 - 0	18 - 7	20-0†	11 - 4	17 - 7	20-0†	10 - 9	16 - 8	20-0†
	DFL	No.3/Stud	12 - 1	17 - 2	20-0†	11 - 6	16 - 5	20-0†	11 - 0	15 - 8	19 - 4	10 - 1	14 - 4	17 - 9	9 - 4	13 - 3	16 - 5
	DFL	Standard	10 - 3	-	-	9 - 9	-	-	9 - 4	-	-	8 - 7	-	-	7 - 11	-	-
	HF	SS	12 - 9	19 - 9	20-0†	12 - 5	19 - 2	20-0†	12 - 0	18 - 7	20-0†	11 - 4	17 - 7	20-0†	10 - 9	16 - 8	20-0†
	HF	No.1	12 - 6	19 - 4	20-0†	12 - 1	18 - 9	20-0†	11 - 9	18 - 2	20-0†	11 - 1	17 - 2	20-0†	10 - 7	16 - 4	20-0†
	HF	No.2	11 - 10	18 - 5	20-0†	11 - 6	17 - 10	20-0†	11 - 2	17 - 4	20-0†	10 - 7	16 - 4	20-0†	10 - 0	15 - 6	20-0†
	HF	No.3/Stud	11 - 7	16 - 9	20-0†	11 - 2	16 - 0	19 - 9	10 - 9	15 - 3	18 - 10	9 - 10	14 - 0	17 - 4	9 - 1	12 - 11	16 - 0
	HF	Standard	10 - 0	-	-	9 - 6	-	-	9 - 1	-	-	8 - 4	-	-	-	-	-
	SP	SS	13 - 4	20-0†	20-0†	12 - 11	20 - 0	20-0†	12 - 6	19 - 5	20-0†	11 - 10	18 - 4	20-0†	11 - 3	17 - 5	20-0†
	SP	No.1	12 - 9	19 - 9	20-0†	12 - 5	19 - 2	20-0†	12 - 0	18 - 7	20-0†	11 - 4	17 - 7	20-0†	10 - 9	16 - 8	20-0†
	SP	No.2	12 - 2	18 - 10	20-0†	11 - 10	18 - 3	20-0†	11 - 6	17 - 9	20-0†	10 - 10	16 - 9	20-0†	10 - 4	15 - 11	20-0†
	SP	No.3	10 - 11	15 - 8	19 - 3	10 - 5	15 - 0	18 - 5	9 - 11	14 - 3	17 - 7	9 - 2	13 - 1	16 - 1	8 - 5	12 - 1	14 - 11
	SP	Stud	10 - 11	15 - 8	19 - 3	10 - 5	15 - 0	18 - 5	9 - 11	14 - 3	17 - 7	9 - 2	13 - 1	16 - 1	8 - 5	12 - 1	14 - 11
	SP	Standard	9 - 3	-	-	8 - 10	-	-	8 - 5	-	-	-	-	-	-	-	-
	SPF	SS	12 - 6	19 - 4	20-0†	12 - 1	18 - 9	20-0†	11 - 9	18 - 2	20-0†	11 - 1	17 - 2	20-0†	10 - 7	16 - 4	20-0†
	SPF	No.1	12 - 2	18 - 10	20-0†	11 - 10	18 - 3	20-0†	11 - 6	17 - 9	20-0†	10 - 10	16 - 9	20-0†	10 - 4	15 - 11	20-0†
	SPF	No.2	12 - 2	18 - 10	20-0†	11 - 10	18 - 3	20-0†	11 - 6	17 - 9	20-0†	10 - 10	16 - 9	20-0†	10 - 4	15 - 11	20-0†
	SPF	No.3/Stud	11 - 7	16 - 9	20-0†	11 - 2	16 - 0	19 - 9	10 - 9	15 - 3	18 - 10	9 - 10	14 - 0	17 - 4	9 - 1	12 - 11	16 - 0
	SPF	Standard	10 - 0	-	-	9 - 6	-	-	9 - 1	-	-	8 - 4	-	-	-	-	-

See Table 3.20B footnotes.

Copyright © American Wood Council. Downloaded/printed pursuant to License Agreement. No reproduction or transfer authorized.

Table 3.20B1 (Cont.) **Maximum Exterior Loadbearing[1] and Non-Loadbearing Stud Lengths for Common Lumber Species Resisting Interior Zone Wind Loads - Stud Deflection Limit = H/180**

(Fully Sheathed with a Minimum of 3/8" Wood Structural Panels)[a]

Exposure B H/180 3/8" WSP

Wind Speed 3-second gust (mph) (See Figure 1.1)			150			160			170			180			195		
Stud Spacing (in.)	Species	Grade	2x4	2x6	2x8	2x4	2x6	2x8	2x4	2x6	2x8	2x4	2x6	2x8	2x4	2x6	2x8
			Maximum Allowable Stud Length (ft-in.)[1]														
12	DFL	SS	13 - 11	20-0†	20-0†	13 - 3	20-0†	20-0†	12 - 9	19 - 9	20-0†	12 - 3	18 - 11	20-0†	11 - 7	17 - 11	20-0†
	DFL	No.1	13 - 4	20-0†	20-0†	12 - 9	19 - 9	20-0†	12 - 3	19 - 0	20-0†	11 - 9	18 - 3	20-0†	11 - 2	17 - 3	20-0†
	DFL	No.2	13 - 1	20-0†	20-0†	12 - 6	19 - 5	20-0†	12 - 0	18 - 7	20-0†	11 - 6	17 - 10	20-0†	10 - 11	16 - 10	20-0†
	DFL	No.3/Stud	12 - 6	17 - 11	20-0†	11 - 9	16 - 8	20-0†	11 - 0	15 - 8	19 - 4	10 - 4	14 - 8	18 - 2	9 - 6	13 - 6	16 - 8
	DFL	Standard	10 - 8	-	-	9 - 11	-	-	9 - 4	-	-	8 - 9	-	-	8 - 0	-	-
	HF	SS	13 - 1	20-0†	20-0†	12 - 6	19 - 5	20-0†	12 - 0	18 - 7	20-0†	11 - 6	17 - 10	20-0†	10 - 11	16 - 10	20-0†
	HF	No.1	12 - 10	19 - 10	20-0†	12 - 3	18 - 11	20-0†	11 - 9	18 - 2	20-0†	11 - 3	17 - 5	20-0†	10 - 8	16 - 6	20-0†
	HF	No.2	12 - 2	18 - 10	20-0†	11 - 8	18 - 0	20-0†	11 - 2	17 - 3	20-0†	10 - 9	16 - 7	20-0†	10 - 2	15 - 8	20-0†
	HF	No.3/Stud	11 - 10	17 - 5	20-0†	11 - 4	16 - 3	20-0†	10 - 9	15 - 3	18 - 10	10 - 1	14 - 4	17 - 9	9 - 3	13 - 2	16 - 3
	HF	Standard	10 - 5	-	-	9 - 8	-	-	9 - 1	-	-	8 - 7	-	-	7 - 10	-	-
	SP	SS	13 - 8	20-0†	20-0†	13 - 1	20-0†	20-0†	12 - 6	19 - 4	20-0†	12 - 0	18 - 7	20-0†	11 - 4	17 - 7	20-0†
	SP	No.1	13 - 1	20-0†	20-0†	12 - 6	19 - 5	20-0†	12 - 0	18 - 7	20-0†	11 - 6	17 - 10	20-0†	10 - 11	16 - 10	20-0†
	SP	No.2	12 - 6	19 - 4	20-0†	11 - 11	18 - 6	20-0†	11 - 5	17 - 9	20-0†	11 - 0	17 - 0	20-0†	10 - 5	16 - 1	20-0†
	SP	No.3	11 - 4	16 - 4	20-0†	10 - 7	15 - 3	18 - 9	9 - 11	14 - 3	17 - 6	9 - 4	13 - 5	16 - 6	8 - 7	12 - 4	15 - 2
	SP	Stud	11 - 4	16 - 4	20-0†	10 - 7	15 - 3	18 - 9	9 - 11	14 - 3	17 - 6	9 - 4	13 - 5	16 - 6	8 - 7	12 - 4	15 - 2
	SP	Standard	9 - 7	-	-	9 - 0	-	-	8 - 5	-	-	7 - 11	-	-	-	-	-
	SPF	SS	12 - 10	19 - 10	20-0†	12 - 3	18 - 11	20-0†	11 - 9	18 - 2	20-0†	11 - 3	17 - 5	20-0†	10 - 8	16 - 6	20-0†
	SPF	No.1	12 - 6	19 - 4	20-0†	11 - 11	18 - 6	20-0†	11 - 5	17 - 9	20-0†	11 - 0	17 - 0	20-0†	10 - 5	16 - 1	20-0†
	SPF	No.2	12 - 6	19 - 4	20-0†	11 - 11	18 - 6	20-0†	11 - 5	17 - 9	20-0†	11 - 0	17 - 0	20-0†	10 - 5	16 - 1	20-0†
	SPF	No.3/Stud	11 - 10	17 - 5	20-0†	11 - 4	16 - 3	20-0†	10 - 9	15 - 3	18 - 10	10 - 1	14 - 4	17 - 9	9 - 3	13 - 2	16 - 3
	SPF	Standard	10 - 5	-	-	9 - 8	-	-	9 - 1	-	-	8 - 7	-	-	7 - 10	-	-
16	DFL	SS	12 - 7	19 - 6	20-0†	12 - 0	18 - 7	20-0†	11 - 6	17 - 10	20-0†	11 - 1	17 - 2	20-0†	10 - 6	16 - 2	20-0†
	DFL	No.1	12 - 1	18 - 9	20-0†	11 - 7	17 - 11	20-0†	11 - 1	17 - 2	20-0†	10 - 8	16 - 6	20-0†	10 - 1	15 - 7	20-0†
	DFL	No.2	11 - 10	18 - 4	20-0†	11 - 4	17 - 6	20-0†	10 - 10	16 - 10	20-0†	10 - 5	16 - 2	20-0†	9 - 10	15 - 3	19 - 1
	DFL	No.3/Stud	10 - 9	15 - 4	19 - 0	10 - 1	14 - 4	17 - 8	9 - 5	13 - 5	16 - 7	8 - 11	12 - 7	15 - 7	8 - 2	11 - 7	14 - 4
	DFL	Standard	9 - 1	-	-	8 - 6	-	-	8 - 0	-	-	-	-	-	-	-	-
	HF	SS	11 - 10	18 - 4	20-0†	11 - 4	17 - 6	20-0†	10 - 10	16 - 10	20-0†	10 - 5	16 - 2	20-0†	9 - 10	15 - 3	19 - 10
	HF	No.1	11 - 7	17 - 11	20-0†	11 - 1	17 - 2	20-0†	10 - 7	16 - 5	20-0†	10 - 2	15 - 9	20-0†	9 - 8	14 - 11	19 - 5
	HF	No.2	11 - 0	17 - 1	20-0†	10 - 6	16 - 4	20-0†	10 - 1	15 - 7	20-0†	9 - 8	15 - 0	19 - 6	9 - 2	14 - 2	18 - 5
	HF	No.3/Stud	10 - 6	14 - 11	18 - 6	9 - 10	13 - 11	17 - 3	9 - 2	13 - 1	16 - 2	8 - 8	12 - 3	15 - 2	7 - 11	11 - 3	13 - 11
	HF	Standard	8 - 11	-	-	8 - 4	-	-	7 - 9	-	-	-	-	-	-	-	-
	SP	SS	12 - 4	19 - 1	20-0†	11 - 10	18 - 3	20-0†	11 - 4	17 - 6	20-0†	10 - 10	16 - 10	20-0†	10 - 3	15 - 11	20-0†
	SP	No.1	11 - 10	18 - 4	20-0†	11 - 4	17 - 6	20-0†	10 - 10	16 - 10	20-0†	10 - 5	16 - 2	20-0†	9 - 10	15 - 3	19 - 10
	SP	No.2	11 - 4	17 - 6	20-0†	10 - 10	16 - 9	20-0†	10 - 4	16 - 0	20-0†	10 - 0	15 - 5	19 - 2	9 - 5	14 - 2	17 - 7
	SP	No.3	9 - 9	14 - 0	17 - 2	9 - 1	13 - 1	16 - 0	8 - 6	12 - 3	15 - 0	8 - 0	11 - 6	14 - 2	-	10 - 7	13 - 0
	SP	Stud	9 - 9	14 - 0	17 - 2	9 - 1	13 - 1	16 - 0	8 - 6	12 - 3	15 - 0	8 - 0	11 - 6	14 - 2	-	10 - 7	13 - 0
	SP	Standard	8 - 3	-	-	-	-	-	-	-	-	-	-	-	-	-	-
	SPF	SS	11 - 7	17 - 11	20-0†	11 - 1	17 - 2	20-0†	10 - 7	16 - 5	20-0†	10 - 2	15 - 9	20-0†	9 - 8	14 - 11	19 - 5
	SPF	No.1	11 - 4	17 - 6	20-0†	10 - 10	16 - 9	20-0†	10 - 4	16 - 0	20-0†	10 - 0	15 - 5	20-0†	9 - 5	14 - 7	18 - 10
	SPF	No.2	11 - 4	17 - 6	20-0†	10 - 10	16 - 9	20-0†	10 - 4	16 - 0	20-0†	10 - 0	15 - 5	20-0†	9 - 5	14 - 7	18 - 10
	SPF	No.3/Stud	10 - 6	14 - 11	18 - 6	9 - 10	13 - 11	17 - 3	9 - 2	13 - 1	16 - 2	8 - 8	12 - 3	15 - 2	7 - 11	11 - 3	13 - 11
	SPF	Standard	8 - 11	-	-	8 - 4	-	-	7 - 9	-	-	-	-	-	-	-	-
24	DFL	SS	10 - 11	16 - 11	20-0†	10 - 5	16 - 2	20-0†	10 - 0	15 - 6	20-0†	9 - 7	14 - 10	19 - 4	9 - 1	14 - 1	18 - 3
	DFL	No.1	10 - 6	16 - 3	20-0†	10 - 0	15 - 6	20-0†	9 - 8	14 - 11	18 - 10	9 - 3	14 - 4	17 - 9	8 - 9	13 - 2	16 - 3
	DFL	No.2	10 - 3	15 - 11	20-0†	9 - 10	15 - 2	19 - 0	9 - 5	14 - 5	17 - 10	9 - 1	13 - 6	16 - 9	8 - 7	12 - 5	15 - 4
	DFL	No.3/Stud	8 - 8	12 - 4	15 - 3	8 - 1	11 - 6	14 - 3	-	10 - 9	13 - 4	-	10 - 2	12 - 6	-	9 - 4	11 - 6
	DFL	Standard	-	-	-	-	-	-	-	-	-	-	-	-	-	-	-
	HF	SS	10 - 3	15 - 11	20-0†	9 - 10	15 - 2	19 - 9	9 - 5	14 - 7	19 - 0	9 - 1	14 - 0	18 - 3	8 - 7	13 - 3	17 - 3
	HF	No.1	10 - 1	15 - 7	20-0†	9 - 7	14 - 10	19 - 4	9 - 3	14 - 3	18 - 6	8 - 10	13 - 8	17 - 6	8 - 5	13 - 0	16 - 0
	HF	No.2	9 - 7	14 - 10	19 - 3	9 - 2	14 - 2	18 - 5	8 - 9	13 - 7	17 - 3	8 - 5	13 - 0	16 - 3	8 - 0	12 - 1	14 - 11
	HF	No.3/Stud	8 - 6	12 - 0	14 - 10	7 - 11	11 - 3	13 - 10	-	10 - 6	13 - 0	-	9 - 11	12 - 3	-	9 - 1	11 - 3
	HF	Standard	-	-	-	-	-	-	-	-	-	-	-	-	-	-	-
	SP	SS	10 - 9	16 - 7	20-0†	10 - 3	15 - 10	20-0†	9 - 10	15 - 2	19 - 9	9 - 5	14 - 7	19 - 0	8 - 11	13 - 10	17 - 11
	SP	No.1	10 - 3	15 - 11	20-0†	9 - 10	15 - 2	19 - 9	9 - 5	14 - 7	19 - 0	9 - 1	14 - 0	18 - 1	8 - 7	13 - 3	16 - 7
	SP	No.2	9 - 10	15 - 2	18 - 9	9 - 5	14 - 1	17 - 6	9 - 0	13 - 3	16 - 5	8 - 7	12 - 5	15 - 5	7 - 10	11 - 5	14 - 2
	SP	No.3	7 - 10	11 - 3	13 - 10	-	10 - 6	12 - 11	-	9 - 10	12 - 1	-	9 - 3	11 - 4	-	8 - 6	10 - 5
	SP	Stud	7 - 10	11 - 3	13 - 10	-	10 - 6	12 - 11	-	9 - 10	12 - 1	-	9 - 3	11 - 4	-	8 - 6	10 - 5
	SP	Standard	-	-	-	-	-	-	-	-	-	-	-	-	-	-	-
	SPF	SS	10 - 1	15 - 7	20-0†	9 - 7	14 - 10	19 - 4	9 - 3	14 - 3	18 - 6	8 - 10	13 - 8	17 - 10	8 - 5	12 - 11	16 - 10
	SPF	No.1	9 - 10	15 - 2	19 - 9	9 - 5	14 - 6	18 - 9	9 - 0	13 - 11	17 - 6	8 - 8	13 - 4	16 - 6	8 - 2	12 - 3	15 - 2
	SPF	No.2	9 - 10	15 - 2	19 - 9	9 - 5	14 - 6	18 - 9	9 - 0	13 - 11	17 - 6	8 - 8	13 - 4	16 - 6	8 - 2	12 - 3	15 - 2
	SPF	No.3/Stud	8 - 6	12 - 0	14 - 10	7 - 11	11 - 3	13 - 10	-	10 - 6	13 - 0	-	9 - 11	12 - 3	-	9 - 1	11 - 3
	SPF	Standard	-	-	-	-	-	-	-	-	-	-	-	-	-	-	-

See Table 3.20B footnotes.

Copyright © American Wood Council. Downloaded/printed pursuant to License Agreement. No reproduction or transfer authorized.

Table 3.20B2 Maximum Exterior Loadbearing[1] and Non-Loadbearing Stud Lengths for Common Lumber Species Resisting Interior Zone Wind Loads - Stud Deflection Limit = H/240

(Fully Sheathed with a Minimum of 3/8" Wood Structural Panels)[a]

Exposure B H/240 3/8" WSP

Wind Speed 3-second gust (mph) (See Figure 1.1)			90			95			100			105		
Stud Spacing (in.)	Species	Grade	2x4	2x6	2x8	2x4	2x6	2x8	2x4	2x6	2x8	2x4	2x6	2x8
			Maximum Allowable Stud Length (ft-in.)[1]											
12	DFL	SS	14-0††	20-0†	20-0†	14-0††	20-0†	20-0†	14-0††	20-0†	20-0†	14-0††	20-0†	20-0†
	DFL	No.1	14-0††	20-0†	20-0†	14-0††	20-0†	20-0†	14-0††	20-0†	20-0†	14-0††	20-0†	20-0†
	DFL	No.2	14-0††	20-0†	20-0†	14-0††	20-0†	20-0†	14-0††	20-0†	20-0†	14-0††	20-0†	20-0†
	DFL	No.3/Stud	14-0††	20-0†	20-0†	14-0††	20-0†	20-0†	14-0††	20-0†	20-0†	14-0††	20-0†	20-0†
	DFL	Standard	14-0††	-	-	14-0††	-	-	14-0††	-	-	14-0††	-	-
	HF	SS	14-0††	20-0†	20-0†	14-0††	20-0†	20-0†	14-0††	20-0†	20-0†	14-0††	20-0†	20-0†
	HF	No.1	14-0††	20-0†	20-0†	14-0††	20-0†	20-0†	14-0††	20-0†	20-0†	14-0††	20-0†	20-0†
	HF	No.2	14-0††	20-0†	20-0†	14-0††	20-0†	20-0†	14-0††	20-0†	20-0†	14-0††	20-0†	20-0†
	HF	No.3/Stud	14-0††	20-0†	20-0†	14-0††	20-0†	20-0†	14-0††	20-0†	20-0†	13 - 9	20-0†	20-0†
	HF	Standard	14-0††	-	-	14-0††	-	-	14-0††	-	-	13 - 9	-	-
	SP	SS	14-0††	20-0†	20-0†	14-0††	20-0†	20-0†	14-0††	20-0†	20-0†	14-0††	20-0†	20-0†
	SP	No.1	14-0††	20-0†	20-0†	14-0††	20-0†	20-0†	14-0††	20-0†	20-0†	14-0††	20-0†	20-0†
	SP	No.2	14-0††	20-0†	20-0†	14-0††	20-0†	20-0†	14-0††	20-0†	20-0†	14-0††	20-0†	20-0†
	SP	No.3	14-0††	20-0†	20-0†	14-0††	20-0†	20-0†	14-0††	20-0†	20-0†	14-0††	20-0†	20-0†
	SP	Stud	14-0††	20-0†	20-0†	14-0††	20-0†	20-0†	14-0††	20-0†	20-0†	14-0††	20-0†	20-0†
	SP	Standard	14-0††	-	-	14-0††	-	-	14-0††	-	-	13 - 9	-	-
	SPF	SS	14-0††	20-0†	20-0†	14-0††	20-0†	20-0†	14-0††	20-0†	20-0†	14-0††	20-0†	20-0†
	SPF	No.1	14-0††	20-0†	20-0†	14-0††	20-0†	20-0†	14-0††	20-0†	20-0†	14-0††	20-0†	20-0†
	SPF	No.2	14-0††	20-0†	20-0†	14-0††	20-0†	20-0†	14-0††	20-0†	20-0†	14-0††	20-0†	20-0†
	SPF	No.3/Stud	14-0††	20-0†	20-0†	14-0††	20-0†	20-0†	14-0††	20-0†	20-0†	13 - 9	20-0†	20-0†
	SPF	Standard	14-0††	-	-	14-0††	-	-	14-0††	-	-	13 - 9	-	-
16	DFL	SS	14-0††	20-0†	20-0†	14-0††	20-0†	20-0†	14-0††	20-0†	20-0†	14-0††	20-0†	20-0†
	DFL	No.1	14-0††	20-0†	20-0†	14-0††	20-0†	20-0†	14-0††	20-0†	20-0†	14-0††	20-0†	20-0†
	DFL	No.2	14-0††	20-0†	20-0†	14-0††	20-0†	20-0†	14-0††	20-0†	20-0†	13 - 9	20-0†	20-0†
	DFL	No.3/Stud	14-0††	20-0†	20-0†	14-0††	20-0†	20-0†	13 - 7	20-0†	20-0†	13 - 1	20-0†	20-0†
	DFL	Standard	14-0††	-	-	14-0††	-	-	13 - 7	-	-	13 - 1	-	-
	HF	SS	14-0††	20-0†	20-0†	14-0††	20-0†	20-0†	14-0††	20-0†	20-0†	13 - 9	20-0†	20-0†
	HF	No.1	14-0††	20-0†	20-0†	14-0††	20-0†	20-0†	13 - 11	20-0†	20-0†	13 - 5	20-0†	20-0†
	HF	No.2	13 - 9	20-0†	20-0†	13 - 8	20-0†	20-0†	13 - 3	20-0†	20-0†	12 - 9	19 - 9	20-0†
	HF	No.3/Stud	13 - 4	20-0†	20-0†	13 - 4	20-0†	20-0†	12 - 10	19 - 11	20-0†	12 - 5	19 - 3	20-0†
	HF	Standard	13 - 4	-	-	13 - 4	-	-	12 - 10	-	-	12 - 5	-	-
	SP	SS	14-0††	20-0†	20-0†	14-0††	20-0†	20-0†	14-0††	20-0†	20-0†	14-0††	20-0†	20-0†
	SP	No.1	14-0††	20-0†	20-0†	14-0††	20-0†	20-0†	14-0††	20-0†	20-0†	13 - 9	20-0†	20-0†
	SP	No.2	14-0††	20-0†	20-0†	14-0††	20-0†	20-0†	13 - 7	20-0†	20-0†	13 - 1	20-0†	20-0†
	SP	No.3	13 - 9	20-0†	20-0†	13 - 8	20-0†	20-0†	13 - 3	20-0†	20-0†	12 - 9	19 - 9	20-0†
	SP	Stud	13 - 9	20-0†	20-0†	13 - 8	20-0†	20-0†	13 - 3	20-0†	20-0†	12 - 9	19 - 9	20-0†
	SP	Standard	13 - 4	-	-	13 - 4	-	-	12 - 8	-	-	12 - 1	-	-
	SPF	SS	14-0††	20-0†	20-0†	14-0††	20-0†	20-0†	13 - 11	20-0†	20-0†	13 - 5	20-0†	20-0†
	SPF	No.1	14-0††	20-0†	20-0†	14-0††	20-0†	20-0†	13 - 7	20-0†	20-0†	13 - 1	20-0†	20-0†
	SPF	No.2	14-0††	20-0†	20-0†	14-0††	20-0†	20-0†	13 - 7	20-0†	20-0†	13 - 1	20-0†	20-0†
	SPF	No.3/Stud	13 - 4	20-0†	20-0†	13 - 4	20-0†	20-0†	12 - 10	19 - 11	20-0†	12 - 5	19 - 3	20-0†
	SPF	Standard	13 - 4	-	-	13 - 4	-	-	12 - 10	-	-	12 - 5	-	-
24	DFL	SS	13 - 7	20-0†	20-0†	13 - 7	20-0†	20-0†	13 - 1	20-0†	20-0†	12 - 8	19 - 7	20-0†
	DFL	No.1	13 - 1	19 - 11	20-0†	13 - 1	19 - 11	20-0†	12 - 7	19 - 6	20-0†	12 - 2	18 - 10	20-0†
	DFL	No.2	12 - 10	19 - 6	20-0†	12 - 9	19 - 6	20-0†	12 - 4	19 - 1	20-0†	11 - 11	18 - 6	20-0†
	DFL	No.3/Stud	12 - 4	18 - 8	20-0†	12 - 2	18 - 8	20-0†	11 - 9	18 - 3	20-0†	11 - 5	17 - 7	20-0†
	DFL	Standard	12 - 1	-	-	12 - 0	-	-	11 - 4	-	-	10 - 9	-	-
	HF	SS	12 - 10	19 - 6	20-0†	12 - 9	19 - 6	20-0†	12 - 4	19 - 1	20-0†	11 - 11	18 - 6	20-0†
	HF	No.1	12 - 7	19 - 1	20-0†	12 - 6	19 - 1	20-0†	12 - 1	18 - 8	20-0†	11 - 8	18 - 1	20-0†
	HF	No.2	12 - 0	18 - 2	20-0†	11 - 11	18 - 2	20-0†	11 - 6	17 - 9	20-0†	11 - 1	17 - 2	20-0†
	HF	No.3/Stud	11 - 8	17 - 9	20-0†	11 - 7	17 - 9	20-0†	11 - 2	17 - 3	20-0†	10 - 9	16 - 8	20-0†
	HF	Standard	11 - 8	-	-	11 - 7	-	-	11 - 1	-	-	10 - 6	-	-
	SP	SS	13 - 4	20-0†	20-0†	13 - 4	20-0†	20-0†	12 - 10	19 - 11	20-0†	12 - 5	19 - 3	20-0†
	SP	No.1	12 - 10	19 - 6	20-0†	12 - 9	19 - 6	20-0†	12 - 4	19 - 1	20-0†	11 - 11	18 - 6	20-0†
	SP	No.2	12 - 4	18 - 8	20-0†	12 - 2	18 - 8	20-0†	11 - 9	18 - 3	20-0†	11 - 5	17 - 7	20-0†
	SP	No.3	12 - 0	18 - 1	20-0†	11 - 11	18 - 1	20-0†	11 - 6	17 - 5	20-0†	11 - 1	16 - 6	20-0†
	SP	Stud	12 - 0	18 - 1	20-0†	11 - 11	18 - 1	20-0†	11 - 6	17 - 5	20-0†	11 - 1	16 - 6	20-0†
	SP	Standard	11 - 0	-	-	10 - 10	-	-	10 - 3	-	-	9 - 8	-	-
	SPF	SS	12 - 7	19 - 1	20-0†	12 - 6	19 - 1	20-0†	12 - 1	18 - 8	20-0†	11 - 8	18 - 1	20-0†
	SPF	No.1	12 - 4	18 - 8	20-0†	12 - 2	18 - 8	20-0†	11 - 9	18 - 3	20-0†	11 - 5	17 - 7	20-0†
	SPF	No.2	12 - 4	18 - 8	20-0†	12 - 2	18 - 8	20-0†	11 - 9	18 - 3	20-0†	11 - 5	17 - 7	20-0†
	SPF	No.3/Stud	11 - 8	17 - 9	20-0†	11 - 7	17 - 9	20-0†	11 - 2	17 - 3	20-0†	10 - 9	16 - 8	20-0†
	SPF	Standard	11 - 8	-	-	11 - 7	-	-	11 - 1	-	-	10 - 6	-	-

See Table 3.20B footnotes.

Copyright © American Wood Council. Downloaded/printed pursuant to License Agreement. No reproduction or transfer authorized.

Table 3.20B2 (Cont.) **Maximum Exterior Loadbearing[1] and Non-Loadbearing Stud Lengths for Common Lumber Species Resisting Interior Zone Wind Loads - Stud Deflection Limit = H/240**

(Fully Sheathed with a Minimum of 3/8" Wood Structural Panels)[a]

Exposure B H/240 3/8" WSP

Wind Speed 3-second gust (mph) (See Figure 1.1)			110			115			120			130			140		
Stud Spacing (in.)	Species	Grade	2x4	2x6	2x8	2x4	2x6	2x8	2x4	2x6	2x8	2x4	2x6	2x8	2x4	2x6	2x8
			Maximum Allowable Stud Length (ft-in.)[1]														
12	DFL	SS	14-0††	20-0†	20-0†	14-0††	20-0†	20-0†	14-0††	20-0†	20-0†	13 - 11	20-0†	20-0†	13 - 2	20-0†	20-0†
	DFL	No.1	14-0††	20-0†	20-0†	14-0††	20-0†	20-0†	14-0††	20-0†	20-0†	13 - 4	20-0†	20-0†	12 - 8	19 - 8	20-0†
	DFL	No.2	14-0††	20-0†	20-0†	14-0††	20-0†	20-0†	13 - 10	20-0†	20-0†	13 - 1	20-0†	20-0†	12 - 5	19 - 3	20-0†
	DFL	No.3/Stud	14-0††	20-0†	20-0†	13 - 7	20-0†	20-0†	13 - 3	20-0†	20-0†	12 - 6	19 - 4	20-0†	11 - 10	18 - 4	20-0†
	DFL	Standard	14-0††	-	-	13 - 7	-	-	13 - 3	-	-	12 - 5	-	-	11 - 5	-	-
	HF	SS	14-0††	20-0†	20-0†	14-0††	20-0†	20-0†	13 - 10	20-0†	20-0†	13 - 1	20-0†	20-0†	12 - 5	19 - 3	20-0†
	HF	No.1	14-0††	20-0†	20-0†	13 - 11	20-0†	20-0†	13 - 6	20-0†	20-0†	12 - 10	19 - 10	20-0†	12 - 2	18 - 10	20-0†
	HF	No.2	13 - 8	20-0†	20-0†	13 - 3	20-0†	20-0†	12 - 10	19 - 11	20-0†	12 - 2	18 - 10	20-0†	11 - 7	17 - 11	20-0†
	HF	No.3/Stud	13 - 4	20-0†	20-0†	12 - 11	20 - 0	20-0†	12 - 6	19 - 5	20-0†	11 - 10	18 - 4	20-0†	11 - 3	17 - 5	20-0†
	HF	Standard	13 - 4	-	-	12 - 11	-	-	12 - 6	-	-	11 - 10	-	-	11 - 2	-	-
	SP	SS	14-0††	20-0†	20-0†	14-0††	20-0†	20-0†	14-0††	20-0†	20-0†	13 - 8	20-0†	20-0†	12 - 11	20-0†	20-0†
	SP	No.1	14-0††	20-0†	20-0†	14-0††	20-0†	20-0†	13 - 10	20-0†	20-0†	13 - 1	20-0†	20-0†	12 - 5	19 - 3	20-0†
	SP	No.2	14-0††	20-0†	20-0†	13 - 7	20-0†	20-0†	13 - 3	20-0†	20-0†	12 - 6	19 - 4	20-0†	11 - 10	18 - 4	20-0†
	SP	No.3	13 - 8	20-0†	20-0†	13 - 3	20-0†	20-0†	12 - 10	19 - 11	20-0†	12 - 2	18 - 10	20-0†	11 - 7	17 - 7	20-0†
	SP	Stud	13 - 8	20-0†	20-0†	13 - 3	20-0†	20-0†	12 - 10	19 - 11	20-0†	12 - 2	18 - 10	20-0†	11 - 7	17 - 7	20-0†
	SP	Standard	13 - 4	-	-	12 - 9	-	-	12 - 2	-	-	11 - 2	-	-	10 - 4	-	-
	SPF	SS	14-0††	20-0†	20-0†	13 - 11	20-0†	20-0†	13 - 6	20-0†	20-0†	12 - 10	19 - 10	20-0†	12 - 2	18 - 10	20-0†
	SPF	No.1	14-0††	20-0†	20-0†	13 - 7	20-0†	20-0†	13 - 3	20-0†	20-0†	12 - 6	19 - 4	20-0†	11 - 10	18 - 4	20-0†
	SPF	No.2	14-0††	20-0†	20-0†	13 - 7	20-0†	20-0†	13 - 3	20-0†	20-0†	12 - 6	19 - 4	20-0†	11 - 10	18 - 4	20-0†
	SPF	No.3/Stud	13 - 4	20-0†	20-0†	12 - 11	20 - 0	20-0†	12 - 6	19 - 5	20-0†	11 - 10	18 - 4	20-0†	11 - 3	17 - 5	20-0†
	SPF	Standard	13 - 4	-	-	12 - 11	-	-	12 - 6	-	-	11 - 10	-	-	11 - 2	-	-
16	DFL	SS	14-0††	20-0†	20-0†	13 - 8	20-0†	20-0†	13 - 3	20-0†	20-0†	12 - 7	19 - 5	20-0†	11 - 11	18 - 6	20-0†
	DFL	No.1	13 - 7	20-0†	20-0†	13 - 2	20-0†	20-0†	12 - 9	19 - 9	20-0†	12 - 1	18 - 9	20-0†	11 - 6	17 - 9	20-0†
	DFL	No.2	13 - 4	20-0†	20-0†	12 - 11	20 - 0	20-0†	12 - 6	19 - 5	20-0†	11 - 10	18 - 4	20-0†	11 - 3	17 - 5	20-0†
	DFL	No.3/Stud	12 - 8	19 - 8	20-0†	12 - 4	19 - 1	20-0†	11 - 11	18 - 6	20-0†	11 - 4	17 - 6	20-0†	10 - 9	16 - 6	20-0†
	DFL	Standard	12 - 8	-	-	12 - 1	-	-	11 - 7	-	-	10 - 7	-	-	9 - 10	-	-
	HF	SS	13 - 4	20-0†	20-0†	12 - 11	20 - 0	20-0†	12 - 6	19 - 5	20-0†	11 - 10	18 - 4	20-0†	11 - 3	17 - 5	20-0†
	HF	No.1	13 - 0	20-0†	20-0†	12 - 7	19 - 6	20-0†	12 - 3	18 - 11	20-0†	11 - 7	17 - 11	20-0†	11 - 0	17 - 0	20-0†
	HF	No.2	12 - 4	19 - 2	20-0†	12 - 0	18 - 7	20-0†	11 - 8	18 - 0	20-0†	11 - 0	17 - 0	20-0†	10 - 5	16 - 2	20-0†
	HF	No.3/Stud	12 - 0	18 - 7	20-0†	11 - 8	18 - 1	20-0†	11 - 4	17 - 6	20-0†	10 - 9	16 - 7	20-0†	10 - 2	15 - 9	19 - 11
	HF	Standard	12 - 0	-	-	11 - 8	-	-	11 - 4	-	-	10 - 4	-	-	9 - 7	-	-
	SP	SS	13 - 10	20-0†	20-0†	13 - 5	20-0†	20-0†	13 - 1	20-0†	20-0†	12 - 4	19 - 1	20-0†	11 - 9	18 - 2	20-0†
	SP	No.1	13 - 4	20-0†	20-0†	12 - 11	20 - 0	20-0†	12 - 6	19 - 5	20-0†	11 - 10	18 - 4	20-0†	11 - 3	17 - 5	20-0†
	SP	No.2	12 - 8	19 - 8	20-0†	12 - 4	19 - 1	20-0†	11 - 11	18 - 6	20-0†	11 - 4	17 - 6	20-0†	10 - 9	16 - 7	20-0†
	SP	No.3	12 - 4	19 - 2	20-0†	12 - 0	18 - 7	20-0†	11 - 8	17 - 9	20-0†	11 - 0	16 - 4	20-0†	10 - 5	15 - 1	18 - 6
	SP	Stud	12 - 4	19 - 2	20-0†	12 - 0	18 - 7	20-0†	11 - 8	17 - 9	20-0†	11 - 0	16 - 4	20-0†	10 - 5	15 - 1	18 - 6
	SP	Standard	11 - 6	-	-	10 - 11	-	-	10 - 5	-	-	9 - 7	-	-	8 - 10	-	-
	SPF	SS	13 - 0	20-0†	20-0†	12 - 7	19 - 6	20-0†	12 - 3	18 - 11	20-0†	11 - 7	17 - 11	20-0†	11 - 0	17 - 0	20-0†
	SPF	No.1	12 - 8	19 - 8	20-0†	12 - 4	19 - 1	20-0†	11 - 11	18 - 6	20-0†	11 - 4	17 - 6	20-0†	10 - 9	16 - 7	20-0†
	SPF	No.2	12 - 8	19 - 8	20-0†	12 - 4	19 - 1	20-0†	11 - 11	18 - 6	20-0†	11 - 4	17 - 6	20-0†	10 - 9	16 - 7	20-0†
	SPF	No.3/Stud	12 - 0	18 - 7	20-0†	11 - 8	18 - 1	20-0†	11 - 4	17 - 6	20-0†	10 - 9	16 - 7	20-0†	10 - 2	15 - 9	19 - 11
	SPF	Standard	12 - 0	-	-	11 - 8	-	-	11 - 4	-	-	10 - 4	-	-	9 - 7	-	-
24	DFL	SS	12 - 3	19 - 0	20-0†	11 - 11	18 - 5	20-0†	11 - 6	17 - 10	20-0†	10 - 11	16 - 11	20-0†	10 - 4	16 - 0	20-0†
	DFL	No.1	11 - 10	18 - 3	20-0†	11 - 5	17 - 8	20-0†	11 - 1	17 - 2	20-0†	10 - 6	16 - 3	20-0†	10 - 0	15 - 5	20-0†
	DFL	No.2	11 - 7	17 - 10	20-0†	11 - 2	17 - 4	20-0†	10 - 10	16 - 10	20-0†	10 - 3	15 - 11	20-0†	9 - 9	15 - 1	19 - 8
	DFL	No.3/Stud	11 - 0	17 - 1	20-0†	10 - 8	16 - 5	20-0†	10 - 4	15 - 8	19 - 4	9 - 10	14 - 4	17 - 9	9 - 4	13 - 3	16 - 5
	DFL	Standard	10 - 3	-	-	9 - 9	-	-	9 - 4	-	-	8 - 7	-	-	7 - 11	-	-
	HF	SS	11 - 7	17 - 10	20-0†	11 - 2	17 - 4	20-0†	10 - 10	16 - 10	20-0†	10 - 3	15 - 11	20-0†	9 - 9	15 - 1	19 - 8
	HF	No.1	11 - 3	17 - 6	20-0†	10 - 11	16 - 11	20-0†	10 - 8	16 - 5	20-0†	10 - 1	15 - 7	20-0†	9 - 7	14 - 9	19 - 2
	HF	No.2	10 - 9	16 - 7	20-0†	10 - 5	16 - 1	20-0†	10 - 1	15 - 8	20-0†	9 - 7	14 - 9	19 - 3	9 - 1	14 - 1	18 - 3
	HF	No.3/Stud	10 - 5	16 - 2	20-0†	10 - 2	15 - 8	19 - 9	9 - 10	15 - 2	18 - 10	9 - 4	14 - 0	17 - 4	8 - 10	12 - 11	16 - 0
	HF	Standard	10 - 0	-	-	9 - 6	-	-	9 - 1	-	-	8 - 4	-	-	-	-	-
	SP	SS	12 - 0	18 - 7	20-0†	11 - 8	18 - 1	20-0†	11 - 4	17 - 6	20-0†	10 - 9	16 - 7	20-0†	10 - 2	15 - 9	20-0†
	SP	No.1	11 - 7	17 - 10	20-0†	11 - 2	17 - 4	20-0†	10 - 10	16 - 10	20-0†	10 - 3	15 - 11	20-0†	9 - 9	15 - 1	19 - 8
	SP	No.2	11 - 0	17 - 1	20-0†	10 - 8	16 - 6	20-0†	10 - 4	16 - 1	20-0†	9 - 10	15 - 2	19 - 9	9 - 4	14 - 5	18 - 9
	SP	No.3	10 - 9	15 - 8	19 - 3	10 - 5	15 - 0	18 - 5	9 - 11	14 - 3	17 - 7	9 - 2	13 - 1	16 - 1	8 - 5	12 - 1	14 - 11
	SP	Stud	10 - 9	15 - 8	19 - 3	10 - 5	15 - 0	18 - 5	9 - 11	14 - 3	17 - 7	9 - 2	13 - 1	16 - 1	8 - 5	12 - 1	14 - 11
	SP	Standard	9 - 3	-	-	8 - 10	-	-	8 - 5	-	-	-	-	-	-	-	-
	SPF	SS	11 - 3	17 - 6	20-0†	10 - 11	16 - 11	20-0†	10 - 8	16 - 5	20-0†	10 - 1	15 - 7	20-0†	9 - 7	14 - 9	19 - 2
	SPF	No.1	11 - 0	17 - 1	20-0†	10 - 8	16 - 6	20-0†	10 - 4	16 - 1	20-0†	9 - 10	15 - 2	19 - 9	9 - 4	14 - 5	18 - 9
	SPF	No.2	11 - 0	17 - 1	20-0†	10 - 8	16 - 6	20-0†	10 - 4	16 - 1	20-0†	9 - 10	15 - 2	19 - 9	9 - 4	14 - 5	18 - 9
	SPF	No.3/Stud	10 - 5	16 - 2	20-0†	10 - 2	15 - 8	19 - 9	9 - 10	15 - 2	18 - 10	9 - 4	14 - 0	17 - 4	8 - 10	12 - 11	16 - 0
	SPF	Standard	10 - 0	-	-	9 - 6	-	-	9 - 1	-	-	8 - 4	-	-	-	-	-

See Table 3.20B footnotes.

Copyright © American Wood Council. Downloaded/printed pursuant to License Agreement. No reproduction or transfer authorized.

Table 3.20B2 (Cont.) **Maximum Exterior Loadbearing[1] and Non-Loadbearing Stud Lengths for Common Lumber Species Resisting Interior Zone Wind Loads - Stud Deflection Limit = H/240**

(Fully Sheathed with a Minimum of 3/8" Wood Structural Panels)[a]

Exposure B H/240 3/8" WSP

Wind Speed 3-second gust (mph) (See Figure 1.1)			150			160			170			180			195		
Stud Spacing (in.)	Species	Grade	2x4	2x6	2x8	2x4	2x6	2x8	2x4	2x6	2x8	2x4	2x6	2x8	2x4	2x6	2x8
			Maximum Allowable Stud Length (ft-in.)[1]														
12	DFL	SS	12 - 7	19 - 6	20-0†	12 - 0	18 - 7	20-0†	11 - 6	17 - 10	20-0†	11 - 1	17 - 2	20-0†	10 - 6	16 - 2	20-0†
	DFL	No.1	12 - 1	18 - 9	20-0†	11 - 7	17 - 11	20-0†	11 - 1	17 - 2	20-0†	10 - 8	16 - 6	20-0†	10 - 1	15 - 7	20-0†
	DFL	No.2	11 - 10	18 - 4	20-0†	11 - 4	17 - 6	20-0†	10 - 10	16 - 10	20-0†	10 - 5	16 - 2	20-0†	9 - 10	15 - 3	19 - 10
	DFL	No.3/Stud	11 - 4	17 - 6	20-0†	10 - 10	16 - 8	20-0†	10 - 4	15 - 8	19 - 4	10 - 0	14 - 8	18 - 2	9 - 5	13 - 6	16 - 8
	DFL	Standard	10 - 8	-	-	9 - 11	-	-	9 - 4	-	-	8 - 9	-	-	8 - 0	-	-
	HF	SS	11 - 10	18 - 4	20-0†	11 - 4	17 - 6	20-0†	10 - 10	16 - 10	20-0†	10 - 5	16 - 2	20-0†	9 - 10	15 - 3	19 - 10
	HF	No.1	11 - 7	17 - 11	20-0†	11 - 1	17 - 2	20-0†	10 - 7	16 - 5	20-0†	10 - 2	15 - 9	20-0†	9 - 8	14 - 11	19 - 5
	HF	No.2	11 - 0	17 - 1	20-0†	10 - 6	16 - 4	20-0†	10 - 1	15 - 7	20-0†	9 - 8	15 - 0	19 - 6	9 - 2	14 - 2	18 - 5
	HF	No.3/Stud	10 - 9	16 - 7	20-0†	10 - 3	15 - 10	20-0†	9 - 10	15 - 2	18 - 10	9 - 5	14 - 4	17 - 9	8 - 11	13 - 2	16 - 3
	HF	Standard	10 - 5	-	-	9 - 8	-	-	9 - 1	-	-	8 - 7	-	-	7 - 10	-	-
	SP	SS	12 - 4	19 - 1	20-0†	11 - 10	18 - 3	20-0†	11 - 4	17 - 6	20-0†	10 - 10	16 - 10	20-0†	10 - 3	15 - 11	20-0†
	SP	No.1	11 - 10	18 - 4	20-0†	11 - 4	17 - 6	20-0†	10 - 10	16 - 10	20-0†	10 - 5	16 - 2	20-0†	9 - 10	15 - 3	19 - 10
	SP	No.2	11 - 4	17 - 6	20-0†	10 - 10	16 - 9	20-0†	10 - 4	16 - 0	20-0†	10 - 0	15 - 5	20-0†	9 - 5	14 - 7	18 - 11
	SP	No.3	11 - 0	16 - 4	20-0†	10 - 6	15 - 3	18 - 9	9 - 11	14 - 3	17 - 6	9 - 4	13 - 5	16 - 6	8 - 7	12 - 4	15 - 2
	SP	Stud	11 - 0	16 - 4	20-0†	10 - 6	15 - 3	18 - 9	9 - 11	14 - 3	17 - 6	9 - 4	13 - 5	16 - 6	8 - 7	12 - 4	15 - 2
	SP	Standard	9 - 7	-	-	9 - 0	-	-	8 - 5	-	-	7 - 11	-	-	-	-	-
	SPF	SS	11 - 7	17 - 11	20-0†	11 - 1	17 - 2	20-0†	10 - 7	16 - 5	20-0†	10 - 2	15 - 9	20-0†	9 - 8	14 - 11	19 - 5
	SPF	No.1	11 - 4	17 - 6	20-0†	10 - 10	16 - 9	20-0†	10 - 4	16 - 0	20-0†	10 - 0	15 - 5	20-0†	9 - 5	14 - 7	18 - 11
	SPF	No.2	11 - 4	17 - 6	20-0†	10 - 10	16 - 9	20-0†	10 - 4	16 - 0	20-0†	10 - 0	15 - 5	20-0†	9 - 5	14 - 7	18 - 11
	SPF	No.3/Stud	10 - 9	16 - 7	20-0†	10 - 3	15 - 10	20-0†	9 - 10	15 - 2	18 - 10	9 - 5	14 - 4	17 - 9	8 - 11	13 - 2	16 - 3
	SPF	Standard	10 - 5	-	-	9 - 8	-	-	9 - 1	-	-	8 - 7	-	-	7 - 10	-	-
16	DFL	SS	11 - 5	17 - 7	20-0†	10 - 11	16 - 10	20-0†	10 - 5	16 - 2	20-0†	10 - 0	15 - 6	20-0†	9 - 6	14 - 8	19 - 1
	DFL	No.1	10 - 11	16 - 11	20-0†	10 - 6	16 - 2	20-0†	10 - 0	15 - 6	20-0†	9 - 8	14 - 11	19 - 5	9 - 1	14 - 1	18 - 4
	DFL	No.2	10 - 9	16 - 7	20-0†	10 - 3	15 - 10	20-0†	9 - 10	15 - 2	19 - 9	9 - 5	14 - 7	19 - 0	8 - 11	13 - 10	17 - 11
	DFL	No.3/Stud	10 - 3	15 - 4	19 - 0	9 - 9	14 - 4	17 - 8	9 - 4	13 - 5	16 - 7	8 - 11	12 - 7	15 - 7	8 - 2	11 - 7	14 - 4
	DFL	Standard	9 - 1	-	-	8 - 6	-	-	8 - 0	-	-	-	-	-	-	-	-
	HF	SS	10 - 9	16 - 7	20-0†	10 - 3	15 - 10	20-0†	9 - 10	15 - 2	19 - 9	9 - 5	14 - 7	19 - 0	8 - 11	13 - 10	17 - 11
	HF	No.1	10 - 6	16 - 2	20-0†	10 - 0	15 - 6	20-0†	9 - 7	14 - 10	19 - 4	9 - 3	14 - 3	18 - 7	8 - 9	13 - 6	17 - 7
	HF	No.2	10 - 0	15 - 5	20-0†	9 - 6	14 - 9	19 - 2	9 - 2	14 - 2	18 - 4	8 - 9	13 - 7	17 - 8	8 - 4	12 - 10	16 - 8
	HF	No.3/Stud	9 - 8	14 - 11	18 - 6	9 - 3	13 - 11	17 - 3	8 - 11	13 - 1	16 - 2	8 - 6	12 - 3	15 - 2	7 - 11	11 - 3	13 - 11
	HF	Standard	8 - 11	-	-	8 - 4	-	-	7 - 9	-	-	-	-	-	-	-	-
	SP	SS	11 - 2	17 - 3	20-0†	10 - 8	16 - 6	20-0†	10 - 3	15 - 10	20-0†	9 - 10	15 - 2	19 - 9	9 - 4	14 - 5	18 - 8
	SP	No.1	10 - 9	16 - 7	20-0†	10 - 3	15 - 10	20-0†	9 - 10	15 - 2	19 - 9	9 - 5	14 - 7	19 - 0	8 - 11	13 - 10	17 - 11
	SP	No.2	10 - 3	15 - 10	20-0†	9 - 9	15 - 1	19 - 8	9 - 4	14 - 6	18 - 10	9 - 0	13 - 11	18 - 1	8 - 6	13 - 2	17 - 2
	SP	No.3	9 - 9	14 - 0	17 - 2	9 - 1	13 - 1	16 - 0	8 - 6	12 - 3	15 - 0	8 - 0	11 - 6	14 - 2	-	10 - 7	13 - 0
	SP	Stud	9 - 9	14 - 0	17 - 2	9 - 1	13 - 1	16 - 0	8 - 6	12 - 3	15 - 0	8 - 0	11 - 6	14 - 2	-	10 - 7	13 - 0
	SP	Standard	8 - 3	-	-	-	-	-	-	-	-	-	-	-	-	-	-
	SPF	SS	10 - 6	16 - 2	20-0†	10 - 0	15 - 6	20-0†	9 - 7	14 - 10	19 - 4	9 - 3	14 - 3	18 - 7	8 - 9	13 - 6	17 - 7
	SPF	No.1	10 - 3	15 - 10	20-0†	9 - 9	15 - 1	19 - 8	9 - 4	14 - 6	18 - 10	9 - 0	13 - 11	18 - 1	8 - 6	13 - 2	17 - 2
	SPF	No.2	10 - 3	15 - 10	20-0†	9 - 9	15 - 1	19 - 8	9 - 4	14 - 6	18 - 10	9 - 0	13 - 11	18 - 1	8 - 6	13 - 2	17 - 2
	SPF	No.3/Stud	9 - 8	14 - 11	18 - 6	9 - 3	13 - 11	17 - 3	8 - 11	13 - 1	16 - 2	8 - 6	12 - 3	15 - 2	7 - 11	11 - 3	13 - 11
	SPF	Standard	8 - 11	-	-	8 - 4	-	-	7 - 9	-	-	-	-	-	-	-	-
24	DFL	SS	9 - 11	15 - 3	19 - 10	9 - 5	14 - 7	19 - 0	9 - 1	14 - 0	18 - 2	8 - 8	13 - 5	17 - 6	8 - 3	12 - 9	16 - 6
	DFL	No.1	9 - 6	14 - 8	19 - 1	9 - 1	14 - 1	18 - 3	8 - 9	13 - 6	17 - 6	8 - 4	12 - 11	16 - 10	7 - 11	12 - 3	15 - 11
	DFL	No.2	9 - 4	14 - 5	18 - 9	8 - 11	13 - 9	17 - 11	8 - 6	13 - 2	17 - 2	8 - 2	12 - 8	16 - 6	7 - 9	12 - 0	15 - 4
	DFL	No.3/Stud	8 - 8	12 - 4	15 - 3	8 - 1	11 - 6	14 - 3	-	10 - 9	13 - 4	-	10 - 2	12 - 6	-	9 - 4	11 - 6
	DFL	Standard	-	-	-	-	-	-	-	-	-	-	-	-	-	-	-
	HF	SS	9 - 4	14 - 5	18 - 9	8 - 11	13 - 9	17 - 11	8 - 6	13 - 2	17 - 2	8 - 2	12 - 8	16 - 6	7 - 9	12 - 0	15 - 7
	HF	No.1	9 - 1	14 - 1	18 - 4	8 - 8	13 - 5	17 - 6	8 - 4	12 - 11	16 - 9	8 - 0	12 - 5	16 - 1	-	11 - 9	15 - 3
	HF	No.2	8 - 8	13 - 5	17 - 5	8 - 3	12 - 10	16 - 8	7 - 11	12 - 3	15 - 11	-	11 - 9	15 - 4	-	11 - 2	14 - 6
	HF	No.3/Stud	8 - 5	12 - 0	14 - 10	7 - 11	11 - 3	13 - 10	-	10 - 6	13 - 0	-	9 - 11	12 - 3	-	9 - 1	11 - 3
	HF	Standard	-	-	-	-	-	-	-	-	-	-	-	-	-	-	-
	SP	SS	9 - 8	15 - 0	19 - 6	9 - 3	14 - 4	18 - 8	8 - 11	13 - 9	17 - 10	8 - 6	13 - 2	17 - 2	8 - 1	12 - 6	16 - 3
	SP	No.1	9 - 4	14 - 5	18 - 9	8 - 11	13 - 9	17 - 11	8 - 6	13 - 2	17 - 2	8 - 2	12 - 8	16 - 6	7 - 9	12 - 0	15 - 7
	SP	No.2	8 - 11	13 - 9	17 - 10	8 - 6	13 - 2	17 - 1	8 - 2	12 - 7	16 - 4	7 - 10	12 - 1	15 - 5	-	11 - 5	14 - 2
	SP	No.3	7 - 10	11 - 3	13 - 10	-	10 - 6	12 - 11	-	9 - 10	12 - 1	-	9 - 3	11 - 4	-	8 - 6	10 - 5
	SP	Stud	7 - 10	11 - 3	13 - 10	-	10 - 6	12 - 11	-	9 - 10	12 - 1	-	9 - 3	11 - 4	-	8 - 6	10 - 5
	SP	Standard	-	-	-	-	-	-	-	-	-	-	-	-	-	-	-
	SPF	SS	9 - 1	14 - 1	18 - 4	8 - 8	13 - 5	17 - 6	8 - 4	12 - 11	16 - 9	8 - 0	12 - 5	16 - 1	-	11 - 9	15 - 3
	SPF	No.1	8 - 11	13 - 9	17 - 10	8 - 6	13 - 2	17 - 1	8 - 2	12 - 7	16 - 4	7 - 10	12 - 1	15 - 9	-	11 - 5	14 - 10
	SPF	No.2	8 - 11	13 - 9	17 - 10	8 - 6	13 - 2	17 - 1	8 - 2	12 - 7	16 - 4	7 - 10	12 - 1	15 - 9	-	11 - 5	14 - 10
	SPF	No.3/Stud	8 - 5	12 - 0	14 - 10	7 - 11	11 - 3	13 - 10	-	10 - 6	13 - 0	-	9 - 11	12 - 3	-	9 - 1	11 - 3
	SPF	Standard	-	-	-	-	-	-	-	-	-	-	-	-	-	-	-

See Table 3.20B footnotes.

Copyright © American Wood Council. Downloaded/printed pursuant to License Agreement. No reproduction or transfer authorized.

Table 3.20B3 Maximum Exterior Loadbearing[1] and Non-Loadbearing Stud Lengths for Common Lumber Species Resisting Interior Zone Wind Loads - Stud Deflection Limit = H/360

(Fully Sheathed with a Minimum of 3/8" Wood Structural Panels)[a]

Exposure B H/360 3/8" WSP

Wind Speed 3-second gust (mph) (See Figure 1.1)			90			95			100			105		
Stud Spacing (in.)	Species	Grade	2x4	2x6	2x8	2x4	2x6	2x8	2x4	2x6	2x8	2x4	2x6	2x8
			Maximum Allowable Stud Length (ft-in.)[1]											
12	DFL	SS	14-0††	20-0†	20-0†	14-0††	20-0†	20-0†	14-0††	20-0†	20-0†	14-0††	20-0†	20-0†
	DFL	No.1	14-0††	20-0†	20-0†	14-0††	20-0†	20-0†	13 - 11	20-0†	20-0†	13 - 6	20-0†	20-0†
	DFL	No.2	14-0††	20-0†	20-0†	14-0††	20-0†	20-0†	13 - 8	20-0†	20-0†	13 - 2	20-0†	20-0†
	DFL	No.3/Stud	13 - 6	20-0†	20-0†	13 - 6	20-0†	20-0†	13 - 0	20-0†	20-0†	12 - 7	19 - 6	20-0†
	DFL	Standard	13 - 6	-	-	13 - 6	-	-	13 - 0	-	-	12 - 7	-	-
	HF	SS	14-0††	20-0†	20-0†	14-0††	20-0†	20-0†	13 - 8	20-0†	20-0†	13 - 2	20-0†	20-0†
	HF	No.1	13 - 10	20-0†	20-0†	13 - 10	20-0†	20-0†	13 - 4	20-0†	20-0†	12 - 11	20 - 0	20-0†
	HF	No.2	13 - 2	20-0†	20-0†	13 - 2	20-0†	20-0†	12 - 8	19 - 8	20-0†	12 - 3	19 - 0	20-0†
	HF	No.3/Stud	12 - 10	19 - 6	20-0†	12 - 9	19 - 6	20-0†	12 - 4	19 - 1	20-0†	11 - 11	18 - 6	20-0†
	HF	Standard	12 - 10	-	-	12 - 9	-	-	12 - 4	-	-	11 - 11	-	-
	SP	SS	14-0††	20-0†	20-0†	14-0††	20-0†	20-0†	14-0††	20-0†	20-0†	13 - 9	20-0†	20-0†
	SP	No.1	14-0††	20-0†	20-0†	14-0††	20-0†	20-0†	13 - 8	20-0†	20-0†	13 - 2	20-0†	20-0†
	SP	No.2	13 - 6	20-0†	20-0†	13 - 6	20-0†	20-0†	13 - 0	20-0†	20-0†	12 - 7	19 - 6	20-0†
	SP	No.3	13 - 2	20-0†	20-0†	13 - 2	20-0†	20-0†	12 - 8	19 - 8	20-0†	12 - 3	19 - 0	20-0†
	SP	Stud	13 - 2	20-0†	20-0†	13 - 2	20-0†	20-0†	12 - 8	19 - 8	20-0†	12 - 3	19 - 0	20-0†
	SP	Standard	12 - 10	-	-	12 - 9	-	-	12 - 4	-	-	11 - 11	-	-
	SPF	SS	13 - 10	20-0†	20-0†	13 - 10	20-0†	20-0†	13 - 4	20-0†	20-0†	12 - 11	20 - 0	20-0†
	SPF	No.1	13 - 6	20-0†	20-0†	13 - 6	20-0†	20-0†	13 - 0	20-0†	20-0†	12 - 7	19 - 6	20-0†
	SPF	No.2	13 - 6	20-0†	20-0†	13 - 6	20-0†	20-0†	13 - 0	20-0†	20-0†	12 - 7	19 - 6	20-0†
	SPF	No.3/Stud	12 - 10	19 - 6	20-0†	12 - 9	19 - 6	20-0†	12 - 4	19 - 1	20-0†	11 - 11	18 - 6	20-0†
	SPF	Standard	12 - 10	-	-	12 - 9	-	-	12 - 4	-	-	11 - 11	-	-
16	DFL	SS	13 - 7	20-0†	20-0†	13 - 7	20-0†	20-0†	13 - 1	20-0†	20-0†	12 - 8	19 - 7	20-0†
	DFL	No.1	13 - 1	19 - 11	20-0†	13 - 1	19 - 11	20-0†	12 - 7	19 - 6	20-0†	12 - 2	18 - 10	20-0†
	DFL	No.2	12 - 10	19 - 6	20-0†	12 - 9	19 - 6	20-0†	12 - 4	19 - 1	20-0†	11 - 11	18 - 6	20-0†
	DFL	No.3/Stud	12 - 4	18 - 8	20-0†	12 - 2	18 - 8	20-0†	11 - 9	18 - 3	20-0†	11 - 5	17 - 7	20-0†
	DFL	Standard	12 - 4	-	-	12 - 2	-	-	11 - 9	-	-	11 - 5	-	-
	HF	SS	12 - 10	19 - 6	20-0†	12 - 9	19 - 6	20-0†	12 - 4	19 - 1	20-0†	11 - 11	18 - 6	20-0†
	HF	No.1	12 - 7	19 - 1	20-0†	12 - 6	19 - 1	20-0†	12 - 1	18 - 8	20-0†	11 - 8	18 - 1	20-0†
	HF	No.2	12 - 0	18 - 2	20-0†	11 - 11	18 - 2	20-0†	11 - 6	17 - 9	20-0†	11 - 1	17 - 2	20-0†
	HF	No.3/Stud	11 - 8	17 - 9	20-0†	11 - 7	17 - 9	20-0†	11 - 2	17 - 3	20-0†	10 - 9	16 - 8	20-0†
	HF	Standard	11 - 8	-	-	11 - 7	-	-	11 - 2	-	-	10 - 9	-	-
	SP	SS	13 - 4	20-0†	20-0†	13 - 4	20-0†	20-0†	12 - 10	19 - 11	20-0†	12 - 5	19 - 3	20-0†
	SP	No.1	12 - 10	19 - 6	20-0†	12 - 9	19 - 6	20-0†	12 - 4	19 - 1	20-0†	11 - 11	18 - 6	20-0†
	SP	No.2	12 - 4	18 - 8	20-0†	12 - 2	18 - 8	20-0†	11 - 9	18 - 3	20-0†	11 - 5	17 - 7	20-0†
	SP	No.3	12 - 0	18 - 2	20-0†	11 - 11	18 - 2	20-0†	11 - 6	17 - 9	20-0†	11 - 1	17 - 2	20-0†
	SP	Stud	12 - 0	18 - 2	20-0†	11 - 11	18 - 2	20-0†	11 - 6	17 - 9	20-0†	11 - 1	17 - 2	20-0†
	SP	Standard	11 - 8	-	-	11 - 7	-	-	11 - 2	-	-	10 - 9	-	-
	SPF	SS	12 - 7	19 - 1	20-0†	12 - 6	19 - 1	20-0†	12 - 1	18 - 8	20-0†	11 - 8	18 - 1	20-0†
	SPF	No.1	12 - 4	18 - 8	20-0†	12 - 2	18 - 8	20-0†	11 - 9	18 - 3	20-0†	11 - 5	17 - 7	20-0†
	SPF	No.2	12 - 4	18 - 8	20-0†	12 - 2	18 - 8	20-0†	11 - 9	18 - 3	20-0†	11 - 5	17 - 7	20-0†
	SPF	No.3/Stud	11 - 8	17 - 9	20-0†	11 - 7	17 - 9	20-0†	11 - 2	17 - 3	20-0†	10 - 9	16 - 8	20-0†
	SPF	Standard	11 - 8	-	-	11 - 7	-	-	11 - 2	-	-	10 - 9	-	-
24	DFL	SS	11 - 11	18 - 1	20-0†	11 - 9	18 - 1	20-0†	11 - 5	17 - 7	20-0†	11 - 0	17 - 0	20-0†
	DFL	No.1	11 - 6	17 - 5	20-0†	11 - 4	17 - 5	20-0†	10 - 11	16 - 11	20-0†	10 - 7	16 - 4	20-0†
	DFL	No.2	11 - 3	17 - 1	20-0†	11 - 1	17 - 1	20-0†	10 - 9	16 - 7	20-0†	10 - 4	16 - 0	20-0†
	DFL	No.3/Stud	10 - 9	16 - 4	20-0†	10 - 7	16 - 4	20-0†	10 - 3	15 - 10	20-0†	9 - 11	15 - 3	19 - 11
	DFL	Standard	10 - 9	-	-	10 - 7	-	-	10 - 3	-	-	9 - 11	-	-
	HF	SS	11 - 3	17 - 1	20-0†	11 - 1	17 - 1	20-0†	10 - 9	16 - 7	20-0†	10 - 4	16 - 0	20-0†
	HF	No.1	11 - 0	16 - 8	20-0†	10 - 10	16 - 8	20-0†	10 - 6	16 - 2	20-0†	10 - 2	15 - 8	20-0†
	HF	No.2	10 - 6	15 - 11	20-0†	10 - 4	15 - 11	20-0†	10 - 0	15 - 5	20-0†	9 - 8	14 - 11	19 - 5
	HF	No.3/Stud	10 - 2	15 - 6	19 - 11	10 - 1	15 - 6	19 - 11	9 - 8	15 - 0	19 - 6	9 - 4	14 - 6	18 - 10
	HF	Standard	10 - 2	-	-	10 - 1	-	-	9 - 8	-	-	9 - 4	-	-
	SP	SS	11 - 8	17 - 9	20-0†	11 - 7	17 - 9	20-0†	11 - 2	17 - 3	20-0†	10 - 9	16 - 8	20-0†
	SP	No.1	11 - 3	17 - 1	20-0†	11 - 1	17 - 1	20-0†	10 - 9	16 - 7	20-0†	10 - 4	16 - 0	20-0†
	SP	No.2	10 - 9	16 - 4	20-0†	10 - 7	16 - 4	20-0†	10 - 3	15 - 10	20-0†	9 - 11	15 - 3	19 - 11
	SP	No.3	10 - 6	15 - 11	20-0†	10 - 4	15 - 11	20-0†	10 - 0	15 - 5	20-0†	9 - 8	14 - 11	19 - 5
	SP	Stud	10 - 6	15 - 11	20-0†	10 - 4	15 - 11	20-0†	10 - 0	15 - 5	20-0†	9 - 8	14 - 11	19 - 5
	SP	Standard	10 - 2	-	-	10 - 1	-	-	9 - 8	-	-	9 - 4	-	-
	SPF	SS	11 - 0	16 - 8	20-0†	10 - 10	16 - 8	20-0†	10 - 6	16 - 2	20-0†	10 - 2	15 - 8	20-0†
	SPF	No.1	10 - 9	16 - 4	20-0†	10 - 7	16 - 4	20-0†	10 - 3	15 - 10	20-0†	9 - 11	15 - 3	19 - 11
	SPF	No.2	10 - 9	16 - 4	20-0†	10 - 7	16 - 4	20-0†	10 - 3	15 - 10	20-0†	9 - 11	15 - 3	19 - 11
	SPF	No.3/Stud	10 - 2	15 - 6	19 - 11	10 - 1	15 - 6	19 - 11	9 - 8	15 - 0	19 - 6	9 - 4	14 - 6	18 - 10
	SPF	Standard	10 - 2	-	-	10 - 1	-	-	9 - 8	-	-	9 - 4	-	-

See Table 3.20B footnotes.

Copyright © American Wood Council. Downloaded/printed pursuant to License Agreement. No reproduction or transfer authorized.

Table 3.20B3 (Cont.) **Maximum Exterior Loadbearing[1] and Non-Loadbearing Stud Lengths for Common Lumber Species Resisting Interior Zone Wind Loads - Stud Deflection Limit = H/360**

(Fully Sheathed with a Minimum of 3/8" Wood Structural Panels)[a]

Exposure B H/360 3/8" WSP

Wind Speed 3-second gust (mph) (See Figure 1.1)			110			115			120			130			140		
Stud Spacing (in.)	Species	Grade	2x4	2x6	2x8	2x4	2x6	2x8	2x4	2x6	2x8	2x4	2x6	2x8	2x4	2x6	2x8
			Maximum Allowable Stud Length (ft-in.)[1]														
12	DFL	SS	13 - 7	20-0†	20-0†	13 - 2	20-0†	20-0†	12 - 9	19 - 9	20-0†	12 - 1	18 - 8	20-0†	11 - 5	17 - 9	20-0†
	DFL	No.1	13 - 0	20-0†	20-0†	12 - 8	19 - 7	20-0†	12 - 3	19 - 0	20-0†	11 - 7	18 - 0	20-0†	11 - 0	17 - 1	20-0†
	DFL	No.2	12 - 9	19 - 9	20-0†	12 - 5	19 - 2	20-0†	12 - 0	18 - 7	20-0†	11 - 4	17 - 7	20-0†	10 - 9	16 - 8	20-0†
	DFL	No.3/Stud	12 - 2	18 - 10	20-0†	11 - 10	18 - 3	20-0†	11 - 6	17 - 9	20-0†	10 - 10	16 - 9	20-0†	10 - 4	15 - 11	20-0†
	DFL	Standard	12 - 2	-	-	11 - 10	-	-	11 - 6	-	-	10 - 10	-	-	10 - 4	-	-
	HF	SS	12 - 9	19 - 9	20-0†	12 - 5	19 - 2	20-0†	12 - 0	18 - 7	20-0†	11 - 4	17 - 7	20-0†	10 - 9	16 - 8	20-0†
	HF	No.1	12 - 6	19 - 4	20-0†	12 - 1	18 - 9	20-0†	11 - 9	18 - 2	20-0†	11 - 1	17 - 2	20-0†	10 - 7	16 - 4	20-0†
	HF	No.2	11 - 10	18 - 5	20-0†	11 - 6	17 - 10	20-0†	11 - 2	17 - 4	20-0†	10 - 7	16 - 4	20-0†	10 - 0	15 - 6	20-0†
	HF	No.3/Stud	11 - 7	17 - 10	20-0†	11 - 2	17 - 4	20-0†	10 - 10	16 - 10	20-0†	10 - 3	15 - 11	20-0†	9 - 9	15 - 1	19 - 8
	HF	Standard	11 - 7	-	-	11 - 2	-	-	10 - 10	-	-	10 - 3	-	-	9 - 9	-	-
	SP	SS	13 - 4	20-0†	20-0†	12 - 11	20 - 0	20-0†	12 - 6	19 - 5	20-0†	11 - 10	18 - 4	20-0†	11 - 3	17 - 5	20-0†
	SP	No.1	12 - 9	19 - 9	20-0†	12 - 5	19 - 2	20-0†	12 - 0	18 - 7	20-0†	11 - 4	17 - 7	20-0†	10 - 9	16 - 8	20-0†
	SP	No.2	12 - 2	18 - 10	20-0†	11 - 10	18 - 3	20-0†	11 - 6	17 - 9	20-0†	10 - 10	16 - 9	20-0†	10 - 4	15 - 11	20-0†
	SP	No.3	11 - 10	18 - 5	20-0†	11 - 6	17 - 10	20-0†	11 - 2	17 - 4	20-0†	10 - 7	16 - 4	20-0†	10 - 0	15 - 6	20-0†
	SP	Stud	11 - 10	18 - 5	20-0†	11 - 6	17 - 10	20-0†	11 - 2	17 - 4	20-0†	10 - 7	16 - 4	20-0†	10 - 0	15 - 6	20-0†
	SP	Standard	11 - 7	-	-	11 - 2	-	-	10 - 10	-	-	10 - 3	-	-	9 - 9	-	-
	SPF	SS	12 - 6	19 - 4	20-0†	12 - 1	18 - 9	20-0†	11 - 9	18 - 2	20-0†	11 - 1	17 - 2	20-0†	10 - 7	16 - 4	20-0†
	SPF	No.1	12 - 2	18 - 10	20-0†	11 - 10	18 - 3	20-0†	11 - 6	17 - 9	20-0†	10 - 10	16 - 9	20-0†	10 - 4	15 - 11	20-0†
	SPF	No.2	12 - 2	18 - 10	20-0†	11 - 10	18 - 3	20-0†	11 - 6	17 - 9	20-0†	10 - 10	16 - 9	20-0†	10 - 4	15 - 11	20-0†
	SPF	No.3/Stud	11 - 7	17 - 10	20-0†	11 - 2	17 - 4	20-0†	10 - 10	16 - 10	20-0†	10 - 3	15 - 11	20-0†	9 - 9	15 - 1	19 - 8
	SPF	Standard	11 - 7	-	-	11 - 2	-	-	10 - 10	-	-	10 - 3	-	-	9 - 9	-	-
16	DFL	SS	12 - 3	19 - 0	20-0†	11 - 11	18 - 5	20-0†	11 - 6	17 - 10	20-0†	10 - 11	16 - 11	20-0†	10 - 4	16 - 0	20-0†
	DFL	No.1	11 - 10	18 - 3	20-0†	11 - 5	17 - 8	20-0†	11 - 1	17 - 2	20-0†	10 - 6	16 - 3	20-0†	10 - 0	15 - 5	20-0†
	DFL	No.2	11 - 7	17 - 10	20-0†	11 - 2	17 - 4	20-0†	10 - 10	16 - 10	20-0†	10 - 3	15 - 11	20-0†	9 - 9	15 - 1	19 - 8
	DFL	No.3/Stud	11 - 0	17 - 1	20-0†	10 - 8	16 - 6	20-0†	10 - 4	16 - 1	20-0†	9 - 10	15 - 2	19 - 9	9 - 4	14 - 5	18 - 9
	DFL	Standard	11 - 0	-	-	10 - 8	-	-	10 - 4	-	-	9 - 10	-	-	9 - 4	-	-
	HF	SS	11 - 7	17 - 10	20-0†	11 - 2	17 - 4	20-0†	10 - 10	16 - 10	20-0†	10 - 3	15 - 11	20-0†	9 - 9	15 - 1	19 - 8
	HF	No.1	11 - 3	17 - 6	20-0†	10 - 11	16 - 11	20-0†	10 - 8	16 - 5	20-0†	10 - 1	15 - 7	20-0†	9 - 7	14 - 9	19 - 2
	HF	No.2	10 - 9	16 - 7	20-0†	10 - 5	16 - 1	20-0†	10 - 1	15 - 8	20-0†	9 - 7	14 - 9	19 - 3	9 - 1	14 - 1	18 - 3
	HF	No.3/Stud	10 - 5	16 - 2	20-0†	10 - 2	15 - 8	20-0†	9 - 10	15 - 2	19 - 9	9 - 4	14 - 5	18 - 8	8 - 10	13 - 8	17 - 9
	HF	Standard	10 - 5	-	-	10 - 2	-	-	9 - 10	-	-	9 - 4	-	-	8 - 10	-	-
	SP	SS	12 - 0	18 - 7	20-0†	11 - 8	18 - 1	20-0†	11 - 4	17 - 6	20-0†	10 - 9	16 - 7	20-0†	10 - 2	15 - 9	20-0†
	SP	No.1	11 - 7	17 - 10	20-0†	11 - 2	17 - 4	20-0†	10 - 10	16 - 10	20-0†	10 - 3	15 - 11	20-0†	9 - 9	15 - 1	19 - 8
	SP	No.2	11 - 0	17 - 1	20-0†	10 - 8	16 - 6	20-0†	10 - 4	16 - 1	20-0†	9 - 10	15 - 2	19 - 9	9 - 4	14 - 5	18 - 9
	SP	No.3	10 - 9	16 - 7	20-0†	10 - 5	16 - 1	20-0†	10 - 1	15 - 8	20-0†	9 - 7	14 - 9	19 - 3	9 - 1	14 - 1	18 - 3
	SP	Stud	10 - 9	16 - 7	20-0†	10 - 5	16 - 1	20-0†	10 - 1	15 - 8	20-0†	9 - 7	14 - 9	19 - 3	9 - 1	14 - 1	18 - 3
	SP	Standard	10 - 5	-	-	10 - 2	-	-	9 - 10	-	-	9 - 4	-	-	8 - 10	-	-
	SPF	SS	11 - 3	17 - 6	20-0†	10 - 11	16 - 11	20-0†	10 - 8	16 - 5	20-0†	10 - 1	15 - 7	20-0†	9 - 7	14 - 9	19 - 2
	SPF	No.1	11 - 0	17 - 1	20-0†	10 - 8	16 - 6	20-0†	10 - 4	16 - 1	20-0†	9 - 10	15 - 2	19 - 9	9 - 4	14 - 5	18 - 9
	SPF	No.2	11 - 0	17 - 1	20-0†	10 - 8	16 - 6	20-0†	10 - 4	16 - 1	20-0†	9 - 10	15 - 2	19 - 9	9 - 4	14 - 5	18 - 9
	SPF	No.3/Stud	10 - 5	16 - 2	20-0†	10 - 2	15 - 8	20-0†	9 - 10	15 - 2	19 - 9	9 - 4	14 - 5	18 - 8	8 - 10	13 - 8	17 - 9
	SPF	Standard	10 - 5	-	-	10 - 2	-	-	9 - 10	-	-	9 - 4	-	-	8 - 10	-	-
24	DFL	SS	10 - 8	16 - 6	20-0†	10 - 4	16 - 0	20-0†	10 - 0	15 - 6	20-0†	9 - 6	14 - 8	19 - 1	9 - 0	13 - 11	18 - 1
	DFL	No.1	10 - 3	15 - 10	20-0†	9 - 11	15 - 4	20 - 0	9 - 8	14 - 11	19 - 5	9 - 1	14 - 1	18 - 4	8 - 8	13 - 5	17 - 5
	DFL	No.2	10 - 0	15 - 6	20-0†	9 - 9	15 - 0	19 - 7	9 - 5	14 - 7	19 - 0	8 - 11	13 - 10	17 - 11	8 - 6	13 - 1	17 - 0
	DFL	No.3/Stud	9 - 7	14 - 10	19 - 3	9 - 3	14 - 4	18 - 8	9 - 0	13 - 11	18 - 1	8 - 6	13 - 2	17 - 2	8 - 1	12 - 6	16 - 3
	DFL	Standard	9 - 7	-	-	9 - 3	-	-	9 - 0	-	-	8 - 6	-	-	7 - 11	-	-
	HF	SS	10 - 0	15 - 6	20-0†	9 - 9	15 - 0	19 - 7	9 - 5	14 - 7	19 - 0	8 - 11	13 - 10	17 - 11	8 - 6	13 - 1	17 - 0
	HF	No.1	9 - 10	15 - 2	19 - 9	9 - 6	14 - 8	19 - 1	9 - 3	14 - 3	18 - 7	8 - 9	13 - 6	17 - 7	8 - 3	12 - 10	16 - 8
	HF	No.2	9 - 4	14 - 5	18 - 9	9 - 1	14 - 0	18 - 2	8 - 9	13 - 7	17 - 8	8 - 4	12 - 10	16 - 8	7 - 11	12 - 2	15 - 10
	HF	No.3/Stud	9 - 1	14 - 0	18 - 3	8 - 10	13 - 7	17 - 8	8 - 6	13 - 2	17 - 2	8 - 1	12 - 6	16 - 3	-	11 - 10	15 - 5
	HF	Standard	9 - 1	-	-	8 - 10	-	-	8 - 6	-	-	8 - 1	-	-	-	-	-
	SP	SS	10 - 5	16 - 2	20-0†	10 - 2	15 - 8	20-0†	9 - 10	15 - 2	19 - 9	9 - 4	14 - 5	18 - 8	8 - 10	13 - 8	17 - 9
	SP	No.1	10 - 0	15 - 6	20-0†	9 - 9	15 - 0	19 - 7	9 - 5	14 - 7	19 - 0	8 - 11	13 - 10	17 - 11	8 - 6	13 - 1	17 - 0
	SP	No.2	9 - 7	14 - 10	19 - 3	9 - 3	14 - 4	18 - 8	9 - 0	13 - 11	18 - 1	8 - 6	13 - 2	17 - 2	8 - 1	12 - 6	16 - 3
	SP	No.3	9 - 4	14 - 5	18 - 9	9 - 1	14 - 0	18 - 2	8 - 9	13 - 7	17 - 7	8 - 4	12 - 10	16 - 1	7 - 11	12 - 1	14 - 11
	SP	Stud	9 - 4	14 - 5	18 - 9	9 - 1	14 - 0	18 - 2	8 - 9	13 - 7	17 - 7	8 - 4	12 - 10	16 - 1	7 - 11	12 - 1	14 - 11
	SP	Standard	9 - 1	-	-	8 - 10	-	-	8 - 5	-	-	-	-	-	-	-	-
	SPF	SS	9 - 10	15 - 2	19 - 9	9 - 6	14 - 8	19 - 1	9 - 3	14 - 3	18 - 7	8 - 9	13 - 6	17 - 7	8 - 3	12 - 10	16 - 8
	SPF	No.1	9 - 7	14 - 10	19 - 3	9 - 3	14 - 4	18 - 8	9 - 0	13 - 11	18 - 1	8 - 6	13 - 2	17 - 2	8 - 1	12 - 6	16 - 3
	SPF	No.2	9 - 7	14 - 10	19 - 3	9 - 3	14 - 4	18 - 8	9 - 0	13 - 11	18 - 1	8 - 6	13 - 2	17 - 2	8 - 1	12 - 6	16 - 3
	SPF	No.3/Stud	9 - 1	14 - 0	18 - 3	8 - 10	13 - 7	17 - 8	8 - 6	13 - 2	17 - 2	8 - 1	12 - 6	16 - 3	-	11 - 10	15 - 5
	SPF	Standard	9 - 1	-	-	8 - 10	-	-	8 - 6	-	-	8 - 1	-	-	-	-	-

See Table 3.20B footnotes.

Copyright © American Wood Council. Downloaded/printed pursuant to License Agreement. No reproduction or transfer authorized.

Table 3.20B3 (Cont.) **Maximum Exterior Loadbearing[1] and Non-Loadbearing Stud Lengths for Common Lumber Species Resisting Interior Zone Wind Loads - Stud Deflection Limit = H/360**

(Fully Sheathed with a Minimum of 3/8" Wood Structural Panels)[a]

Exposure B H/360 3/8" WSP

Wind Speed 3-second gust (mph) (See Figure 1.1)			150			160			170			180			195		
Stud Spacing (in.)	Species	Grade	2x4	2x6	2x8	2x4	2x6	2x8	2x4	2x6	2x8	2x4	2x6	2x8	2x4	2x6	2x8
			Maximum Allowable Stud Length (ft-in.)[1]														
12	DFL	SS	10 - 11	16 - 11	20-0†	10 - 5	16 - 2	20-0†	10 - 0	15 - 6	20-0†	9 - 7	14 - 10	19 - 4	9 - 1	14 - 1	18 - 3
	DFL	No.1	10 - 6	16 - 3	20-0†	10 - 0	15 - 6	20-0†	9 - 8	14 - 11	19 - 4	9 - 3	14 - 4	18 - 7	8 - 9	13 - 6	17 - 7
	DFL	No.2	10 - 3	15 - 11	20-0†	9 - 10	15 - 2	19 - 9	9 - 5	14 - 7	19 - 0	9 - 1	14 - 0	18 - 3	8 - 7	13 - 3	17 - 3
	DFL	No.3/Stud	9 - 10	15 - 2	19 - 9	9 - 5	14 - 6	18 - 10	9 - 0	13 - 11	18 - 1	8 - 8	13 - 4	17 - 5	8 - 2	12 - 8	16 - 5
	DFL	Standard	9 - 10	-	-	9 - 5	-	-	9 - 0	-	-	8 - 8	-	-	8 - 0	-	-
	HF	SS	10 - 3	15 - 11	20-0†	9 - 10	15 - 2	19 - 9	9 - 5	14 - 7	19 - 0	9 - 1	14 - 0	18 - 3	8 - 7	13 - 3	17 - 3
	HF	No.1	10 - 1	15 - 7	20-0†	9 - 7	14 - 10	19 - 4	9 - 3	14 - 3	18 - 6	8 - 10	13 - 8	17 - 10	8 - 5	12 - 11	16 - 10
	HF	No.2	9 - 7	14 - 10	19 - 3	9 - 2	14 - 2	18 - 5	8 - 9	13 - 7	17 - 8	8 - 5	13 - 0	16 - 11	8 - 0	12 - 4	16 - 0
	HF	No.3/Stud	9 - 4	14 - 5	18 - 9	8 - 11	13 - 9	17 - 11	8 - 6	13 - 2	17 - 2	8 - 2	12 - 8	16 - 6	7 - 9	12 - 0	15 - 7
	HF	Standard	9 - 4	-	-	8 - 11	-	-	8 - 6	-	-	8 - 2	-	-	7 - 9	-	-
	SP	SS	10 - 9	16 - 7	20-0†	10 - 3	15 - 10	20-0†	9 - 10	15 - 2	19 - 9	9 - 5	14 - 7	19 - 0	8 - 11	13 - 10	17 - 11
	SP	No.1	10 - 3	15 - 11	20-0†	9 - 10	15 - 2	19 - 9	9 - 5	14 - 7	19 - 0	9 - 1	14 - 0	18 - 3	8 - 7	13 - 3	17 - 3
	SP	No.2	9 - 10	15 - 2	19 - 9	9 - 5	14 - 6	18 - 10	9 - 0	13 - 11	18 - 1	8 - 8	13 - 4	17 - 5	8 - 2	12 - 8	16 - 5
	SP	No.3	9 - 7	14 - 10	19 - 3	9 - 2	14 - 2	18 - 5	8 - 9	13 - 7	17 - 6	8 - 5	13 - 0	16 - 6	8 - 0	12 - 4	15 - 2
	SP	Stud	9 - 7	14 - 10	19 - 3	9 - 2	14 - 2	18 - 5	8 - 9	13 - 7	17 - 6	8 - 5	13 - 0	16 - 6	8 - 0	12 - 4	15 - 2
	SP	Standard	9 - 4	-	-	8 - 11	-	-	8 - 5	-	-	7 - 11	-	-	-	-	-
	SPF	SS	10 - 1	15 - 7	20-0†	9 - 7	14 - 10	19 - 4	9 - 3	14 - 3	18 - 6	8 - 10	13 - 8	17 - 10	8 - 5	12 - 11	16 - 10
	SPF	No.1	9 - 10	15 - 2	19 - 9	9 - 5	14 - 6	18 - 10	9 - 0	13 - 11	18 - 1	8 - 8	13 - 4	17 - 5	8 - 2	12 - 8	16 - 5
	SPF	No.2	9 - 10	15 - 2	19 - 9	9 - 5	14 - 6	18 - 10	9 - 0	13 - 11	18 - 1	8 - 8	13 - 4	17 - 5	8 - 2	12 - 8	16 - 5
	SPF	No.3/Stud	9 - 4	14 - 5	18 - 9	8 - 11	13 - 9	17 - 11	8 - 6	13 - 2	17 - 2	8 - 2	12 - 8	16 - 6	7 - 9	12 - 0	15 - 7
	SPF	Standard	9 - 4	-	-	8 - 11	-	-	8 - 6	-	-	8 - 2	-	-	7 - 9	-	-
16	DFL	SS	9 - 11	15 - 3	19 - 10	9 - 5	14 - 7	19 - 0	9 - 1	14 - 0	18 - 2	8 - 8	13 - 5	17 - 6	8 - 3	12 - 9	16 - 6
	DFL	No.1	9 - 6	14 - 8	19 - 1	9 - 1	14 - 1	18 - 3	8 - 9	13 - 6	17 - 6	8 - 4	12 - 11	16 - 10	7 - 11	12 - 3	15 - 11
	DFL	No.2	9 - 4	14 - 5	18 - 9	8 - 11	13 - 9	17 - 11	8 - 6	13 - 2	17 - 2	8 - 2	12 - 8	16 - 6	7 - 9	12 - 0	15 - 7
	DFL	No.3/Stud	8 - 11	13 - 9	17 - 10	8 - 6	13 - 2	17 - 1	8 - 2	12 - 7	16 - 4	7 - 10	12 - 1	15 - 7	-	11 - 5	14 - 4
	DFL	Standard	8 - 11	-	-	8 - 6	-	-	8 - 0	-	-	-	-	-	-	-	-
	HF	SS	9 - 4	14 - 5	18 - 9	8 - 11	13 - 9	17 - 11	8 - 6	13 - 2	17 - 2	8 - 2	12 - 8	16 - 6	7 - 9	12 - 0	15 - 7
	HF	No.1	9 - 1	14 - 1	18 - 4	8 - 8	13 - 5	17 - 6	8 - 4	12 - 11	16 - 9	8 - 0	12 - 5	16 - 1	-	11 - 9	15 - 3
	HF	No.2	8 - 8	13 - 5	17 - 5	8 - 3	12 - 10	16 - 8	7 - 11	12 - 3	15 - 11	-	11 - 9	15 - 4	-	11 - 2	14 - 6
	HF	No.3/Stud	8 - 5	13 - 0	16 - 11	8 - 1	12 - 5	16 - 2	-	11 - 11	15 - 6	-	11 - 6	14 - 11	-	10 - 10	13 - 11
	HF	Standard	8 - 5	-	-	8 - 1	-	-	-	-	-	-	-	-	-	-	-
	SP	SS	9 - 8	15 - 0	19 - 6	9 - 3	14 - 4	18 - 8	8 - 11	13 - 9	17 - 10	8 - 6	13 - 2	17 - 2	8 - 1	12 - 6	16 - 3
	SP	No.1	9 - 4	14 - 5	18 - 9	8 - 11	13 - 9	17 - 11	8 - 6	13 - 2	17 - 2	8 - 2	12 - 8	16 - 6	7 - 9	12 - 0	15 - 7
	SP	No.2	8 - 11	13 - 9	17 - 10	8 - 6	13 - 2	17 - 1	8 - 2	12 - 7	16 - 4	7 - 10	12 - 1	15 - 9	-	11 - 5	14 - 10
	SP	No.3	8 - 8	13 - 5	17 - 2	8 - 3	12 - 10	16 - 0	7 - 11	12 - 3	15 - 0	-	11 - 6	14 - 2	-	10 - 7	13 - 0
	SP	Stud	8 - 8	13 - 5	17 - 2	8 - 3	12 - 10	16 - 0	7 - 11	12 - 3	15 - 0	-	11 - 6	14 - 2	-	10 - 7	13 - 0
	SP	Standard	8 - 3	-	-	-	-	-	-	-	-	-	-	-	-	-	-
	SPF	SS	9 - 1	14 - 1	18 - 4	8 - 8	13 - 5	17 - 6	8 - 4	12 - 11	16 - 9	8 - 0	12 - 5	16 - 1	-	11 - 9	15 - 3
	SPF	No.1	8 - 11	13 - 9	17 - 10	8 - 6	13 - 2	17 - 1	8 - 2	12 - 7	16 - 4	7 - 10	12 - 1	15 - 9	-	11 - 5	14 - 10
	SPF	No.2	8 - 11	13 - 9	17 - 10	8 - 6	13 - 2	17 - 1	8 - 2	12 - 7	16 - 4	7 - 10	12 - 1	15 - 9	-	11 - 5	14 - 10
	SPF	No.3/Stud	8 - 5	13 - 0	16 - 11	8 - 1	12 - 5	16 - 2	-	11 - 11	15 - 6	-	11 - 6	14 - 11	-	10 - 10	13 - 11
	SPF	Standard	8 - 5	-	-	8 - 1	-	-	-	-	-	-	-	-	-	-	-
24	DFL	SS	8 - 7	13 - 3	17 - 3	8 - 2	12 - 8	16 - 6	7 - 10	12 - 2	15 - 10	-	11 - 8	15 - 2	-	11 - 1	14 - 4
	DFL	No.1	8 - 3	12 - 9	16 - 7	7 - 11	12 - 2	15 - 10	-	11 - 8	15 - 2	-	11 - 3	14 - 7	-	10 - 7	13 - 10
	DFL	No.2	8 - 1	12 - 6	16 - 3	-	11 - 11	15 - 6	-	11 - 5	14 - 11	-	11 - 0	14 - 4	-	10 - 5	13 - 6
	DFL	No.3/Stud	-	11 - 11	15 - 3	-	11 - 5	14 - 3	-	10 - 9	13 - 4	-	10 - 2	12 - 6	-	9 - 4	11 - 6
	DFL	Standard	-	-	-	-	-	-	-	-	-	-	-	-	-	-	-
	HF	SS	8 - 1	12 - 6	16 - 3	-	11 - 11	15 - 6	-	11 - 5	14 - 11	-	11 - 0	14 - 4	-	10 - 5	13 - 6
	HF	No.1	7 - 11	12 - 3	15 - 11	-	11 - 8	15 - 2	-	11 - 2	14 - 7	-	10 - 9	14 - 0	-	10 - 2	13 - 3
	HF	No.2	-	11 - 7	15 - 1	-	11 - 1	14 - 5	-	10 - 8	13 - 10	-	10 - 3	13 - 4	-	9 - 8	12 - 7
	HF	No.3/Stud	-	11 - 4	14 - 8	-	10 - 10	13 - 10	-	10 - 4	13 - 0	-	9 - 11	12 - 3	-	9 - 1	11 - 3
	HF	Standard	-	-	-	-	-	-	-	-	-	-	-	-	-	-	-
	SP	SS	8 - 5	13 - 0	16 - 11	8 - 1	12 - 5	16 - 2	-	11 - 11	15 - 6	-	11 - 6	14 - 11	-	10 - 10	14 - 1
	SP	No.1	8 - 1	12 - 6	16 - 3	-	11 - 11	15 - 6	-	11 - 5	14 - 11	-	11 - 0	14 - 4	-	10 - 5	13 - 6
	SP	No.2	-	11 - 11	15 - 6	-	11 - 5	14 - 10	-	10 - 11	14 - 2	-	10 - 6	13 - 8	-	9 - 11	12 - 11
	SP	No.3	-	11 - 3	13 - 10	-	10 - 6	12 - 11	-	9 - 10	12 - 1	-	9 - 3	11 - 4	-	8 - 6	10 - 5
	SP	Stud	-	11 - 3	13 - 10	-	10 - 6	12 - 11	-	9 - 10	12 - 1	-	9 - 3	11 - 4	-	8 - 6	10 - 5
	SP	Standard	-	-	-	-	-	-	-	-	-	-	-	-	-	-	-
	SPF	SS	7 - 11	12 - 3	15 - 11	-	11 - 8	15 - 2	-	11 - 2	14 - 7	-	10 - 9	14 - 0	-	10 - 2	13 - 3
	SPF	No.1	-	11 - 11	15 - 6	-	11 - 5	14 - 10	-	10 - 11	14 - 2	-	10 - 6	13 - 8	-	9 - 11	12 - 11
	SPF	No.2	-	11 - 11	15 - 6	-	11 - 5	14 - 10	-	10 - 11	14 - 2	-	10 - 6	13 - 8	-	9 - 11	12 - 11
	SPF	No.3/Stud	-	11 - 4	14 - 8	-	10 - 10	13 - 10	-	10 - 4	13 - 0	-	9 - 11	12 - 3	-	9 - 1	11 - 3
	SPF	Standard	-	-	-	-	-	-	-	-	-	-	-	-	-	-	-

See Table 3.20B footnotes.

Copyright © American Wood Council. Downloaded/printed pursuant to License Agreement. No reproduction or transfer authorized.

Table 3.20B4 Maximum Exterior Loadbearing[1] and Non-Loadbearing Stud Lengths for Common Lumber Species Resisting Interior Zone Wind Loads - Stud Deflection Limit = H/180

(Fully Sheathed with a Minimum of 3/8" Wood Structural Panels)[a]

Exposure C H/180 3/8" WSP

Wind Speed 3-second gust (mph) (See Figure 1.1)			90			95			100			105		
Stud Spacing (in.)	Species	Grade	2x4	2x6	2x8	2x4	2x6	2x8	2x4	2x6	2x8	2x4	2x6	2x8
			Maximum Allowable Stud Length (ft-in.)[1]											
12	DFL	SS	14-0††	20-0†	20-0†	14-0††	20-0†	20-0†	14-0††	20-0†	20-0†	14-0††	20-0†	20-0†
	DFL	No.1	14-0††	20-0†	20-0†	14-0††	20-0†	20-0†	14-0††	20-0†	20-0†	14-0††	20-0†	20-0†
	DFL	No.2	14-0††	20-0†	20-0†	14-0††	20-0†	20-0†	14-0††	20-0†	20-0†	14-0††	20-0†	20-0†
	DFL	No.3/Stud	14-0††	20-0†	20-0†	14-0††	20-0†	20-0†	14-0††	20-0†	20-0†	14-0††	20-0†	20-0†
	DFL	Standard	14-0††	-	-	14-0††	-	-	13 - 9	-	-	13 - 1	-	-
	HF	SS	14-0††	20-0†	20-0†	14-0††	20-0†	20-0†	14-0††	20-0†	20-0†	14-0††	20-0†	20-0†
	HF	No.1	14-0††	20-0†	20-0†	14-0††	20-0†	20-0†	14-0††	20-0†	20-0†	14-0††	20-0†	20-0†
	HF	No.2	14-0††	20-0†	20-0†	14-0††	20-0†	20-0†	14-0††	20-0†	20-0†	13 - 11	20-0†	20-0†
	HF	No.3/Stud	14-0††	20-0†	20-0†	14-0††	20-0†	20-0†	14-0††	20-0†	20-0†	13 - 7	20-0†	20-0†
	HF	Standard	14-0††	-	-	14-0††	-	-	13 - 5	-	-	12 - 9	-	-
	SP	SS	14-0††	20-0†	20-0†	14-0††	20-0†	20-0†	14-0††	20-0†	20-0†	14-0††	20-0†	20-0†
	SP	No.1	14-0††	20-0†	20-0†	14-0††	20-0†	20-0†	14-0††	20-0†	20-0†	14-0††	20-0†	20-0†
	SP	No.2	14-0††	20-0†	20-0†	14-0††	20-0†	20-0†	14-0††	20-0†	20-0†	14-0††	20-0†	20-0†
	SP	No.3	14-0††	20-0†	20-0†	14-0††	20-0†	20-0†	14-0††	20-0†	20-0†	13 - 11	20-0†	20-0†
	SP	Stud	14-0††	20-0†	20-0†	14-0††	20-0†	20-0†	14-0††	20-0†	20-0†	13 - 11	20-0†	20-0†
	SP	Standard	13 - 11	-	-	13 - 2	-	-	12 - 5	-	-	11 - 10	-	-
	SPF	SS	14-0††	20-0†	20-0†	14-0††	20-0†	20-0†	14-0††	20-0†	20-0†	14-0††	20-0†	20-0†
	SPF	No.1	14-0††	20-0†	20-0†	14-0††	20-0†	20-0†	14-0††	20-0†	20-0†	14-0††	20-0†	20-0†
	SPF	No.2	14-0††	20-0†	20-0†	14-0††	20-0†	20-0†	14-0††	20-0†	20-0†	14-0††	20-0†	20-0†
	SPF	No.3/Stud	14-0††	20-0†	20-0†	14-0††	20-0†	20-0†	14-0††	20-0†	20-0†	13 - 7	20-0†	20-0†
	SPF	Standard	14-0††	-	-	14-0††	-	-	13 - 5	-	-	12 - 9	-	-
16	DFL	SS	14-0††	20-0†	20-0†	14-0††	20-0†	20-0†	14-0††	20-0†	20-0†	14-0††	20-0†	20-0†
	DFL	No.1	14-0††	20-0†	20-0†	14-0††	20-0†	20-0†	14-0††	20-0†	20-0†	13 - 10	20-0†	20-0†
	DFL	No.2	14-0††	20-0†	20-0†	14-0††	20-0†	20-0†	14-0††	20-0†	20-0†	13 - 7	20-0†	20-0†
	DFL	No.3/Stud	14-0††	20-0†	20-0†	13 - 10	20-0†	20-0†	13 - 5	19 - 10	20-0†	12 - 11	18 - 10	20-0†
	DFL	Standard	13 - 3	-	-	12 - 6	-	-	11 - 10	-	-	11 - 2	-	-
	HF	SS	14-0††	20-0†	20-0†	14-0††	20-0†	20-0†	14-0††	20-0†	20-0†	13 - 7	20-0†	20-0†
	HF	No.1	14-0††	20-0†	20-0†	14-0††	20-0†	20-0†	13 - 8	20-0†	20-0†	13 - 3	20-0†	20-0†
	HF	No.2	14-0††	20-0†	20-0†	13 - 6	20-0†	20-0†	13 - 0	20-0†	20-0†	12 - 7	19 - 6	20-0†
	HF	No.3/Stud	13 - 8	20-0†	20-0†	13 - 2	20-0†	20-0†	12 - 8	19 - 4	20-0†	12 - 3	18 - 4	20-0†
	HF	Standard	12 - 11	-	-	12 - 2	-	-	11 - 6	-	-	10 - 11	-	-
	SP	SS	14-0††	20-0†	20-0†	14-0††	20-0†	20-0†	14-0††	20-0†	20-0†	14-0††	20-0†	20-0†
	SP	No.1	14-0††	20-0†	20-0†	14-0††	20-0†	20-0†	14-0††	20-0†	20-0†	13 - 7	20-0†	20-0†
	SP	No.2	14-0††	20-0†	20-0†	13 - 10	20-0†	20-0†	13 - 5	20-0†	20-0†	12 - 11	20-0†	20-0†
	SP	No.3	14-0††	20-0†	20-0†	13 - 4	19 - 2	20-0†	12 - 7	18 - 1	20-0†	12 - 0	17 - 2	20-0†
	SP	Stud	14-0††	20-0†	20-0†	13 - 4	19 - 2	20-0†	12 - 7	18 - 1	20-0†	12 - 0	17 - 2	20-0†
	SP	Standard	11 - 11	-	-	11 - 3	-	-	10 - 8	-	-	10 - 1	-	-
	SPF	SS	14-0††	20-0†	20-0†	14-0††	20-0†	20-0†	13 - 8	20-0†	20-0†	13 - 3	20-0†	20-0†
	SPF	No.1	14-0††	20-0†	20-0†	13 - 10	20-0†	20-0†	13 - 5	20-0†	20-0†	12 - 11	20-0†	20-0†
	SPF	No.2	14-0††	20-0†	20-0†	13 - 10	20-0†	20-0†	13 - 5	20-0†	20-0†	12 - 11	20-0†	20-0†
	SPF	No.3/Stud	13 - 8	20-0†	20-0†	13 - 2	20-0†	20-0†	12 - 8	19 - 4	20-0†	12 - 3	18 - 4	20-0†
	SPF	Standard	12 - 11	-	-	12 - 2	-	-	11 - 6	-	-	10 - 11	-	-
24	DFL	SS	13 - 11	20-0†	20-0†	13 - 5	20-0†	20-0†	12 - 11	20 - 0	20-0†	12 - 6	19 - 4	20-0†
	DFL	No.1	13 - 4	20-0†	20-0†	12 - 11	19 - 11	20-0†	12 - 5	19 - 3	20-0†	12 - 0	18 - 7	20-0†
	DFL	No.2	13 - 1	20-0†	20-0†	12 - 7	19 - 6	20-0†	12 - 2	18 - 10	20-0†	11 - 9	18 - 2	20-0†
	DFL	No.3/Stud	12 - 6	17 - 11	20-0†	11 - 10	16 - 11	20-0†	11 - 3	16 - 0	19 - 9	10 - 8	15 - 2	18 - 9
	DFL	Standard	10 - 8	-	-	10 - 0	-	-	9 - 6	-	-	9 - 0	-	-
	HF	SS	13 - 1	20-0†	20-0†	12 - 7	19 - 6	20-0†	12 - 2	18 - 10	20-0†	11 - 9	18 - 2	20-0†
	HF	No.1	12 - 10	19 - 10	20-0†	12 - 4	19 - 1	20-0†	11 - 11	18 - 5	20-0†	11 - 6	17 - 10	20-0†
	HF	No.2	12 - 2	18 - 10	20-0†	11 - 9	18 - 2	20-0†	11 - 4	17 - 6	20-0†	10 - 11	16 - 11	20-0†
	HF	No.3/Stud	11 - 10	17 - 5	20-0†	11 - 5	16 - 5	20-0†	11 - 0	15 - 7	19 - 3	10 - 5	14 - 9	18 - 3
	HF	Standard	10 - 5	-	-	9 - 10	-	-	9 - 3	-	-	8 - 10	-	-
	SP	SS	13 - 8	20-0†	20-0†	13 - 2	20-0†	20-0†	12 - 8	19 - 7	20-0†	12 - 3	19 - 0	20-0†
	SP	No.1	13 - 1	20-0†	20-0†	12 - 7	19 - 6	20-0†	12 - 2	18 - 10	20-0†	11 - 9	18 - 2	20-0†
	SP	No.2	12 - 6	19 - 4	20-0†	12 - 0	18 - 8	20-0†	11 - 7	18 - 0	20-0†	11 - 3	17 - 4	20-0†
	SP	No.3	11 - 4	16 - 4	20-0†	10 - 9	15 - 5	18 - 11	10 - 2	14 - 7	17 - 11	9 - 8	13 - 10	17 - 0
	SP	Stud	11 - 4	16 - 4	20-0†	10 - 9	15 - 5	18 - 11	10 - 2	14 - 7	17 - 11	9 - 8	13 - 10	17 - 0
	SP	Standard	9 - 7	-	-	9 - 1	-	-	8 - 7	-	-	8 - 2	-	-
	SPF	SS	12 - 10	19 - 10	20-0†	12 - 4	19 - 1	20-0†	11 - 11	18 - 5	20-0†	11 - 6	17 - 10	20-0†
	SPF	No.1	12 - 6	19 - 4	20-0†	12 - 0	18 - 8	20-0†	11 - 7	18 - 0	20-0†	11 - 3	17 - 4	20-0†
	SPF	No.2	12 - 6	19 - 4	20-0†	12 - 0	18 - 8	20-0†	11 - 7	18 - 0	20-0†	11 - 3	17 - 4	20-0†
	SPF	No.3/Stud	11 - 10	17 - 5	20-0†	11 - 5	16 - 5	20-0†	11 - 0	15 - 7	19 - 3	10 - 5	14 - 9	18 - 3
	SPF	Standard	10 - 5	-	-	9 - 10	-	-	9 - 3	-	-	8 - 10	-	-

See Table 3.20B footnotes.

Copyright © American Wood Council. Downloaded/printed pursuant to License Agreement. No reproduction or transfer authorized.

Table 3.20B4 (Cont.) **Maximum Exterior Loadbearing[1] and Non-Loadbearing Stud Lengths for Common Lumber Species Resisting Interior Zone Wind Loads - Stud Deflection Limit = H/180**

(Fully Sheathed with a Minimum of 3/8" Wood Structural Panels)[a]

Exposure C H/180 3/8" WSP

Wind Speed 3-second gust (mph) (See Figure 1.1)			110			115			120			130			140		
Stud Spacing (in.)	Species	Grade	2x4	2x6	2x8	2x4	2x6	2x8	2x4	2x6	2x8	2x4	2x6	2x8	2x4	2x6	2x8
			Maximum Allowable Stud Length (ft-in.)[1]														
12	DFL	SS	14-0††	20-0†	20-0†	14-0††	20-0†	20-0†	14-0††	20-0†	20-0†	13 - 8	20-0†	20-0†	13 - 0	20-0†	20-0†
	DFL	No.1	14-0††	20-0†	20-0†	14-0††	20-0†	20-0†	13 - 11	20-0†	20-0†	13 - 2	20-0†	20-0†	12 - 6	19 - 4	20-0†
	DFL	No.2	14-0††	20-0†	20-0†	14-0††	20-0†	20-0†	13 - 8	20-0†	20-0†	12 - 11	20 - 0	20-0†	12 - 3	19 - 0	20-0†
	DFL	No.3/Stud	13 - 10	20-0†	20-0†	13 - 5	19 - 11	20-0†	13 - 0	19 - 1	20-0†	12 - 4	17 - 6	20-0†	11 - 4	16 - 2	20 - 0
	DFL	Standard	12 - 5	-	-	11 - 10	-	-	11 - 4	-	-	10 - 5	-	-	9 - 7	-	-
	HF	SS	14-0††	20-0†	20-0†	14-0††	20-0†	20-0†	13 - 8	20-0†	20-0†	12 - 11	20 - 0	20-0†	12 - 3	19 - 0	20-0†
	HF	No.1	14-0††	20-0†	20-0†	13 - 9	20-0†	20-0†	13 - 4	20-0†	20-0†	12 - 7	19 - 6	20-0†	12 - 0	18 - 6	20-0†
	HF	No.2	13 - 6	20-0†	20-0†	13 - 1	20-0†	20-0†	12 - 8	19 - 8	20-0†	12 - 0	18 - 7	20-0†	11 - 5	17 - 8	20-0†
	HF	No.3/Stud	13 - 1	20-0†	20-0†	12 - 9	19 - 5	20-0†	12 - 4	18 - 7	20-0†	11 - 8	17 - 0	20-0†	11 - 1	15 - 9	19 - 5
	HF	Standard	12 - 2	-	-	11 - 7	-	-	11 - 1	-	-	10 - 2	-	-	9 - 5	-	-
	SP	SS	14-0††	20-0†	20-0†	14-0††	20-0†	20-0†	14-0††	20-0†	20-0†	13 - 5	20-0†	20-0†	12 - 9	19 - 9	20-0†
	SP	No.1	14-0††	20-0†	20-0†	14-0††	20-0†	20-0†	13 - 8	20-0†	20-0†	12 - 11	20 - 0	20-0†	12 - 3	19 - 0	20-0†
	SP	No.2	13 - 10	20-0†	20-0†	13 - 5	20-0†	20-0†	13 - 0	20-0†	20-0†	12 - 4	19 - 1	20-0†	11 - 8	18 - 1	20-0†
	SP	No.3	13 - 3	19 - 1	20-0†	12 - 8	18 - 2	20-0†	12 - 1	17 - 5	20-0†	11 - 1	15 - 11	19 - 7	10 - 3	14 - 9	18 - 1
	SP	Stud	13 - 3	19 - 1	20-0†	12 - 8	18 - 2	20-0†	12 - 1	17 - 5	20-0†	11 - 1	15 - 11	19 - 7	10 - 3	14 - 9	18 - 1
	SP	Standard	11 - 3	-	-	10 - 8	-	-	10 - 3	-	-	9 - 5	-	-	8 - 8	-	-
	SPF	SS	14-0††	20-0†	20-0†	13 - 9	20-0†	20-0†	13 - 4	20-0†	20-0†	12 - 7	19 - 6	20-0†	12 - 0	18 - 6	20-0†
	SPF	No.1	13 - 10	20-0†	20-0†	13 - 5	20-0†	20-0†	13 - 0	20-0†	20-0†	12 - 4	19 - 1	20-0†	11 - 8	18 - 1	20-0†
	SPF	No.2	13 - 10	20-0†	20-0†	13 - 5	20-0†	20-0†	13 - 0	20-0†	20-0†	12 - 4	19 - 1	20-0†	11 - 8	18 - 1	20-0†
	SPF	No.3/Stud	13 - 1	20-0†	20-0†	12 - 9	19 - 5	20-0†	12 - 4	18 - 7	20-0†	11 - 8	17 - 0	20-0†	11 - 1	15 - 9	19 - 5
	SPF	Standard	12 - 2	-	-	11 - 7	-	-	11 - 1	-	-	10 - 2	-	-	9 - 5	-	-
16	DFL	SS	13 - 11	20-0†	20-0†	13 - 6	20-0†	20-0†	13 - 1	20-0†	20-0†	12 - 5	19 - 2	20-0†	11 - 9	18 - 3	20-0†
	DFL	No.1	13 - 5	20-0†	20-0†	13 - 0	20-0†	20-0†	12 - 7	19 - 6	20-0†	11 - 11	18 - 5	20-0†	11 - 4	17 - 6	20-0†
	DFL	No.2	13 - 1	20-0†	20-0†	12 - 9	19 - 8	20-0†	12 - 4	19 - 1	20-0†	11 - 8	18 - 1	20-0†	11 - 1	17 - 2	20-0†
	DFL	No.3/Stud	12 - 6	17 - 11	20-0†	12 - 0	17 - 1	20-0†	11 - 6	16 - 4	20-0†	10 - 7	15 - 0	18 - 6	9 - 9	13 - 10	17 - 1
	DFL	Standard	10 - 8	-	-	10 - 2	-	-	9 - 9	-	-	8 - 11	-	-	8 - 3	-	-
	HF	SS	13 - 1	20-0†	20-0†	12 - 9	19 - 8	20-0†	12 - 4	19 - 1	20-0†	11 - 8	18 - 1	20-0†	11 - 1	17 - 2	20-0†
	HF	No.1	12 - 10	19 - 10	20-0†	12 - 5	19 - 3	20-0†	12 - 1	18 - 8	20-0†	11 - 5	17 - 8	20-0†	10 - 10	16 - 9	20-0†
	HF	No.2	12 - 2	18 - 11	20-0†	11 - 10	18 - 4	20-0†	11 - 6	17 - 9	20-0†	10 - 10	16 - 10	20-0†	10 - 4	15 - 11	20-0†
	HF	No.3/Stud	11 - 10	17 - 6	20-0†	11 - 6	16 - 8	20-0†	11 - 2	15 - 11	19 - 8	10 - 3	14 - 7	18 - 1	9 - 6	13 - 6	16 - 8
	HF	Standard	10 - 5	-	-	9 - 11	-	-	9 - 6	-	-	8 - 8	-	-	8 - 1	-	-
	SP	SS	13 - 8	20-0†	20-0†	13 - 3	20-0†	20-0†	12 - 10	19 - 11	20-0†	12 - 2	18 - 10	20-0†	11 - 7	17 - 10	20-0†
	SP	No.1	13 - 1	20-0†	20-0†	12 - 9	19 - 8	20-0†	12 - 4	19 - 1	20-0†	11 - 8	18 - 1	20-0†	11 - 1	17 - 2	20-0†
	SP	No.2	12 - 6	19 - 4	20-0†	12 - 2	18 - 9	20-0†	11 - 9	18 - 3	20-0†	11 - 2	17 - 3	20-0†	10 - 7	16 - 4	20-0†
	SP	No.3	11 - 5	16 - 4	20-0†	10 - 10	15 - 7	19 - 2	10 - 4	14 - 11	18 - 4	9 - 6	13 - 8	16 - 10	8 - 10	12 - 7	15 - 6
	SP	Stud	11 - 5	16 - 4	20-0†	10 - 10	15 - 7	19 - 2	10 - 4	14 - 11	18 - 4	9 - 6	13 - 8	16 - 10	8 - 10	12 - 7	15 - 6
	SP	Standard	9 - 7	-	-	9 - 2	-	-	8 - 9	-	-	8 - 1	-	-	-	-	-
	SPF	SS	12 - 10	19 - 10	20-0†	12 - 5	19 - 3	20-0†	12 - 1	18 - 8	20-0†	11 - 5	17 - 8	20-0†	10 - 10	16 - 9	20-0†
	SPF	No.1	12 - 6	19 - 4	20-0†	12 - 2	18 - 9	20-0†	11 - 9	18 - 3	20-0†	11 - 2	17 - 3	20-0†	10 - 7	16 - 4	20-0†
	SPF	No.2	12 - 6	19 - 4	20-0†	12 - 2	18 - 9	20-0†	11 - 9	18 - 3	20-0†	11 - 2	17 - 3	20-0†	10 - 7	16 - 4	20-0†
	SPF	No.3/Stud	11 - 10	17 - 6	20-0†	11 - 6	16 - 8	20-0†	11 - 2	15 - 11	19 - 8	10 - 3	14 - 7	18 - 1	9 - 6	13 - 6	16 - 8
	SPF	Standard	10 - 5	-	-	9 - 11	-	-	9 - 6	-	-	8 - 8	-	-	8 - 1	-	-
24	DFL	SS	12 - 1	18 - 8	20-0†	11 - 9	18 - 2	20-0†	11 - 5	17 - 7	20-0†	10 - 9	16 - 8	20-0†	10 - 3	15 - 10	20-0†
	DFL	No.1	11 - 8	18 - 0	20-0†	11 - 3	17 - 5	20-0†	10 - 11	16 - 11	20-0†	10 - 4	16 - 0	20-0†	9 - 10	15 - 2	19 - 5
	DFL	No.2	11 - 5	17 - 7	20-0†	11 - 0	17 - 1	20-0†	10 - 9	16 - 7	20-0†	10 - 2	15 - 8	19 - 11	9 - 7	14 - 10	18 - 5
	DFL	No.3/Stud	10 - 2	14 - 5	17 - 10	9 - 8	13 - 9	17 - 0	9 - 3	13 - 2	16 - 3	8 - 6	12 - 1	14 - 11	7 - 10	11 - 2	13 - 9
	DFL	Standard	8 - 7	-	-	8 - 2	-	-	7 - 10	-	-	-	-	-	-	-	-
	HF	SS	11 - 5	17 - 7	20-0†	11 - 0	17 - 1	20-0†	10 - 9	16 - 7	20-0†	10 - 2	15 - 8	20-0†	9 - 7	14 - 11	19 - 4
	HF	No.1	11 - 2	17 - 3	20-0†	10 - 9	16 - 8	20-0†	10 - 6	16 - 2	20-0†	9 - 11	15 - 4	19 - 11	9 - 5	14 - 7	18 - 11
	HF	No.2	10 - 7	16 - 5	20-0†	10 - 3	15 - 11	20-0†	10 - 0	15 - 5	20-0†	9 - 5	14 - 7	19 - 0	9 - 0	13 - 10	17 - 10
	HF	No.3/Stud	9 - 11	14 - 1	17 - 4	9 - 5	13 - 5	16 - 7	9 - 0	12 - 10	15 - 10	8 - 3	11 - 9	14 - 6	-	10 - 10	13 - 5
	HF	Standard	8 - 5	-	-	8 - 0	-	-	-	-	-	-	-	-	-	-	-
	SP	SS	11 - 10	18 - 4	20-0†	11 - 6	17 - 10	20-0†	11 - 2	17 - 3	20-0†	10 - 7	16 - 4	20-0†	10 - 0	15 - 6	20-0†
	SP	No.1	11 - 5	17 - 7	20-0†	11 - 0	17 - 1	20-0†	10 - 9	16 - 7	20-0†	10 - 2	15 - 8	20-0†	9 - 7	14 - 11	19 - 4
	SP	No.2	10 - 10	16 - 10	20-0†	10 - 6	16 - 4	20-0†	10 - 3	15 - 10	20 - 0	9 - 8	14 - 10	18 - 4	9 - 2	13 - 8	16 - 11
	SP	No.3	9 - 2	13 - 2	16 - 2	8 - 9	12 - 6	15 - 5	8 - 4	12 - 0	14 - 9	-	11 - 0	13 - 6	-	10 - 2	12 - 6
	SP	Stud	9 - 2	13 - 2	16 - 2	8 - 9	12 - 6	15 - 5	8 - 4	12 - 0	14 - 9	-	11 - 0	13 - 6	-	10 - 2	12 - 6
	SP	Standard	-	-	-	-	-	-	-	-	-	-	-	-	-	-	-
	SPF	SS	11 - 2	17 - 3	20-0†	10 - 9	16 - 8	20-0†	10 - 6	16 - 2	20-0†	9 - 11	15 - 4	19 - 11	9 - 5	14 - 7	18 - 11
	SPF	No.1	10 - 10	16 - 10	20-0†	10 - 6	16 - 4	20-0†	10 - 3	15 - 10	20-0†	9 - 8	15 - 0	19 - 5	9 - 2	14 - 2	18 - 1
	SPF	No.2	10 - 10	16 - 10	20-0†	10 - 6	16 - 4	20-0†	10 - 3	15 - 10	20-0†	9 - 8	15 - 0	19 - 5	9 - 2	14 - 2	18 - 1
	SPF	No.3/Stud	9 - 11	14 - 1	17 - 4	9 - 5	13 - 5	16 - 7	9 - 0	12 - 10	15 - 10	8 - 3	11 - 9	14 - 6	-	10 - 10	13 - 5
	SPF	Standard	8 - 5	-	-	8 - 0	-	-	-	-	-	-	-	-	-	-	-

See Table 3.20B footnotes.

Copyright © American Wood Council. Downloaded/printed pursuant to License Agreement. No reproduction or transfer authorized.

Table 3.20B4 (Cont.) **Maximum Exterior Loadbearing[1] and Non-Loadbearing Stud Lengths for Common Lumber Species Resisting Interior Zone Wind Loads - Stud Deflection Limit = H/180**

(Fully Sheathed with a Minimum of 3/8" Wood Structural Panels)[a]

Exposure C H/180 3/8" WSP

Wind Speed 3-second gust (mph) (See Figure 1.1)			150			160			170			180			195		
Stud Spacing (in.)	Species	Grade	2x4	2x6	2x8	2x4	2x6	2x8	2x4	2x6	2x8	2x4	2x6	2x8	2x4	2x6	2x8
			Maximum Allowable Stud Length (ft-in.)[1]														
12	DFL	SS	12 - 5	19 - 2	20-0†	11 - 10	18 - 4	20-0†	11 - 4	17 - 7	20-0†	10 - 11	16 - 11	20-0†	10 - 4	16 - 0	20-0†
	DFL	No.1	11 - 11	18 - 5	20-0†	11 - 5	17 - 8	20-0†	10 - 11	16 - 11	20-0†	10 - 6	16 - 3	20-0†	9 - 11	15 - 4	19 - 9
	DFL	No.2	11 - 8	18 - 1	20-0†	11 - 2	17 - 3	20-0†	10 - 8	16 - 7	20-0†	10 - 3	15 - 11	20-0†	9 - 9	15 - 1	18 - 8
	DFL	No.3/Stud	10 - 7	15 - 0	18 - 6	9 - 10	14 - 0	17 - 4	9 - 3	13 - 1	16 - 2	8 - 8	12 - 4	15 - 3	8 - 0	11 - 4	14 - 0
	DFL	Standard	8 - 11	-	-	8 - 4	-	-	7 - 10	-	-	-	-	-	-	-	-
	HF	SS	11 - 8	18 - 1	20-0†	11 - 2	17 - 3	20-0†	10 - 8	16 - 7	20-0†	10 - 3	15 - 11	20-0†	9 - 9	15 - 1	19 - 7
	HF	No.1	11 - 5	17 - 8	20-0†	10 - 11	16 - 11	20-0†	10 - 6	16 - 2	20-0†	10 - 1	15 - 7	20-0†	9 - 6	14 - 8	19 - 2
	HF	No.2	10 - 10	16 - 10	20-0†	10 - 5	16 - 1	20-0†	10 - 0	15 - 5	20-0†	9 - 7	14 - 10	19 - 3	9 - 1	14 - 0	18 - 1
	HF	No.3/Stud	10 - 3	14 - 7	18 - 1	9 - 7	13 - 8	16 - 10	9 - 0	12 - 9	15 - 9	8 - 6	12 - 0	14 - 10	7 - 9	11 - 0	13 - 8
	HF	Standard	8 - 9	-	-	8 - 2	-	-	-	-	-	-	-	-	-	-	-
	SP	SS	12 - 2	18 - 10	20-0†	11 - 8	18 - 0	20-0†	11 - 2	17 - 3	20-0†	10 - 9	16 - 7	20-0†	10 - 2	15 - 8	20-0†
	SP	No.1	11 - 8	18 - 1	20-0†	11 - 2	17 - 3	20-0†	10 - 8	16 - 7	20-0†	10 - 3	15 - 11	20-0†	9 - 9	15 - 1	19 - 7
	SP	No.2	11 - 2	17 - 3	20-0†	10 - 8	16 - 6	20-0†	10 - 3	15 - 10	19 - 11	9 - 10	15 - 2	18 - 9	9 - 3	13 - 11	17 - 2
	SP	No.3	9 - 6	13 - 8	16 - 10	8 - 11	12 - 9	15 - 8	8 - 4	12 - 0	14 - 8	7 - 10	11 - 3	13 - 10	-	10 - 4	12 - 8
	SP	Stud	9 - 6	13 - 8	16 - 10	8 - 11	12 - 9	15 - 8	8 - 4	12 - 0	14 - 8	7 - 10	11 - 3	13 - 10	-	10 - 4	12 - 8
	SP	Standard	8 - 1	-	-	-	-	-	-	-	-	-	-	-	-	-	-
	SPF	SS	11 - 5	17 - 8	20-0†	10 - 11	16 - 11	20-0†	10 - 6	16 - 2	20-0†	10 - 1	15 - 7	20-0†	9 - 6	14 - 8	19 - 2
	SPF	No.1	11 - 2	17 - 3	20-0†	10 - 8	16 - 6	20-0†	10 - 3	15 - 10	20-0†	9 - 10	15 - 2	19 - 9	9 - 3	14 - 4	18 - 5
	SPF	No.2	11 - 2	17 - 3	20-0†	10 - 8	16 - 6	20-0†	10 - 3	15 - 10	20-0†	9 - 10	15 - 2	19 - 9	9 - 3	14 - 4	18 - 5
	SPF	No.3/Stud	10 - 3	14 - 7	18 - 1	9 - 7	13 - 8	16 - 10	9 - 0	12 - 9	15 - 9	8 - 6	12 - 0	14 - 10	7 - 9	11 - 0	13 - 8
	SPF	Standard	8 - 9	-	-	8 - 2	-	-	-	-	-	-	-	-	-	-	-
16	DFL	SS	11 - 3	17 - 4	20-0†	10 - 9	16 - 7	20-0†	10 - 3	15 - 11	20-0†	9 - 11	15 - 3	19 - 10	9 - 4	14 - 5	18 - 9
	DFL	No.1	10 - 9	16 - 8	20-0†	10 - 4	16 - 0	20-0†	9 - 11	15 - 4	19 - 8	9 - 6	14 - 8	18 - 6	9 - 0	13 - 8	16 - 11
	DFL	No.2	10 - 7	16 - 4	20-0†	10 - 1	15 - 7	19 - 10	9 - 8	15 - 0	18 - 7	9 - 4	14 - 1	17 - 5	8 - 10	12 - 11	16 - 0
	DFL	No.3/Stud	9 - 1	12 - 10	15 - 11	8 - 5	12 - 0	14 - 10	7 - 11	11 - 3	13 - 11	-	10 - 7	13 - 1	-	9 - 8	12 - 0
	DFL	Standard	-	-	-	-	-	-	-	-	-	-	-	-	-	-	-
	HF	SS	10 - 7	16 - 4	20-0†	10 - 1	15 - 7	20-0†	9 - 8	15 - 0	19 - 6	9 - 4	14 - 5	18 - 9	8 - 10	13 - 7	17 - 8
	HF	No.1	10 - 4	16 - 0	20-0†	9 - 10	15 - 3	19 - 10	9 - 6	14 - 8	19 - 0	9 - 1	14 - 1	18 - 3	8 - 7	13 - 4	16 - 9
	HF	No.2	9 - 10	15 - 2	19 - 9	9 - 5	14 - 6	18 - 11	9 - 0	13 - 11	18 - 0	8 - 8	13 - 5	16 - 11	8 - 2	12 - 7	15 - 6
	HF	No.3/Stud	8 - 10	12 - 6	15 - 6	8 - 3	11 - 8	14 - 5	-	10 - 11	13 - 6	-	10 - 4	12 - 9	-	9 - 5	11 - 8
	HF	Standard	-	-	-	-	-	-	-	-	-	-	-	-	-	-	-
	SP	SS	11 - 0	17 - 0	20-0†	10 - 6	16 - 3	20-0†	10 - 1	15 - 7	20-0†	9 - 8	15 - 0	19 - 6	9 - 2	14 - 2	18 - 5
	SP	No.1	10 - 7	16 - 4	20-0†	10 - 1	15 - 7	20-0†	9 - 8	15 - 0	19 - 6	9 - 4	14 - 5	18 - 9	8 - 10	13 - 7	17 - 4
	SP	No.2	10 - 1	15 - 7	19 - 6	9 - 8	14 - 9	18 - 3	9 - 3	13 - 9	17 - 1	8 - 11	13 - 0	16 - 1	8 - 2	11 - 11	14 - 9
	SP	No.3	8 - 2	11 - 9	14 - 5	-	10 - 11	13 - 5	-	10 - 3	12 - 7	-	9 - 8	11 - 10	-	8 - 10	10 - 11
	SP	Stud	8 - 2	11 - 9	14 - 5	-	10 - 11	13 - 5	-	10 - 3	12 - 7	-	9 - 8	11 - 10	-	8 - 10	10 - 11
	SP	Standard	-	-	-	-	-	-	-	-	-	-	-	-	-	-	-
	SPF	SS	10 - 4	16 - 0	20-0†	9 - 10	15 - 3	19 - 10	9 - 6	14 - 8	19 - 0	9 - 1	14 - 1	18 - 4	8 - 7	13 - 4	17 - 4
	SPF	No.1	10 - 1	15 - 7	20-0†	9 - 8	14 - 11	19 - 5	9 - 3	14 - 3	18 - 3	8 - 11	13 - 9	17 - 2	8 - 5	12 - 9	15 - 9
	SPF	No.2	10 - 1	15 - 7	20-0†	9 - 8	14 - 11	19 - 5	9 - 3	14 - 3	18 - 3	8 - 11	13 - 9	17 - 2	8 - 5	12 - 9	15 - 9
	SPF	No.3/Stud	8 - 10	12 - 6	15 - 6	8 - 3	11 - 8	14 - 5	-	10 - 11	13 - 6	-	10 - 4	12 - 9	-	9 - 5	11 - 8
	SPF	Standard	-	-	-	-	-	-	-	-	-	-	-	-	-	-	-
24	DFL	SS	9 - 9	15 - 1	19 - 7	9 - 4	14 - 5	18 - 9	8 - 11	13 - 10	17 - 11	8 - 7	13 - 3	17 - 3	8 - 1	12 - 6	16 - 4
	DFL	No.1	9 - 4	14 - 6	18 - 1	9 - 0	13 - 8	16 - 10	8 - 7	12 - 9	15 - 9	8 - 3	12 - 0	14 - 10	7 - 9	11 - 0	13 - 8
	DFL	No.2	9 - 2	13 - 10	17 - 1	8 - 9	12 - 11	15 - 11	8 - 5	12 - 1	14 - 11	8 - 0	11 - 4	14 - 0	-	10 - 5	12 - 11
	DFL	No.3/Stud	-	10 - 4	12 - 9	-	9 - 8	11 - 11	-	9 - 1	11 - 2	-	8 - 6	10 - 6	-	7 - 10	9 - 8
	DFL	Standard	-	-	-	-	-	-	-	-	-	-	-	-	-	-	-
	HF	SS	9 - 2	14 - 2	18 - 5	8 - 9	13 - 7	17 - 8	8 - 5	13 - 0	16 - 11	8 - 1	12 - 6	16 - 3	-	11 - 10	15 - 4
	HF	No.1	9 - 0	13 - 10	17 - 10	8 - 7	13 - 3	16 - 7	8 - 3	12 - 7	15 - 7	7 - 11	11 - 10	14 - 8	-	10 - 11	13 - 5
	HF	No.2	8 - 6	13 - 2	16 - 7	8 - 2	12 - 6	15 - 5	7 - 10	11 - 8	14 - 6	-	11 - 0	13 - 7	-	10 - 1	12 - 6
	HF	No.3/Stud	-	10 - 1	12 - 5	-	9 - 5	11 - 7	-	8 - 10	10 - 11	-	8 - 4	10 - 3	-	-	9 - 5
	HF	Standard	-	-	-	-	-	-	-	-	-	-	-	-	-	-	-
	SP	SS	9 - 7	14 - 9	19 - 3	9 - 2	14 - 2	18 - 4	8 - 9	13 - 7	17 - 7	8 - 5	13 - 0	16 - 11	8 - 0	12 - 4	16 - 0
	SP	No.1	9 - 2	14 - 2	18 - 5	8 - 9	13 - 7	17 - 3	8 - 5	13 - 0	16 - 2	8 - 1	12 - 3	15 - 2	-	11 - 3	13 - 11
	SP	No.2	8 - 9	12 - 8	15 - 8	8 - 2	11 - 10	14 - 8	-	11 - 1	13 - 9	-	10 - 5	12 - 11	-	9 - 7	11 - 10
	SP	No.3	-	9 - 5	11 - 7	-	8 - 10	10 - 10	-	8 - 3	10 - 2	-	7 - 9	9 - 6	-	-	8 - 9
	SP	Stud	-	9 - 5	11 - 7	-	8 - 10	10 - 10	-	8 - 3	10 - 2	-	7 - 9	9 - 6	-	-	8 - 9
	SP	Standard	-	-	-	-	-	-	-	-	-	-	-	-	-	-	-
	SPF	SS	9 - 0	13 - 10	18 - 0	8 - 7	13 - 3	17 - 3	8 - 3	12 - 8	16 - 6	7 - 11	12 - 3	15 - 11	-	11 - 7	15 - 0
	SPF	No.1	8 - 9	13 - 6	16 - 10	8 - 4	12 - 8	15 - 8	8 - 0	11 - 11	14 - 8	-	11 - 2	13 - 10	-	10 - 3	12 - 8
	SPF	No.2	8 - 9	13 - 6	16 - 10	8 - 4	12 - 8	15 - 8	8 - 0	11 - 11	14 - 8	-	11 - 2	13 - 10	-	10 - 3	12 - 8
	SPF	No.3/Stud	-	10 - 1	12 - 5	-	9 - 5	11 - 7	-	8 - 10	10 - 11	-	8 - 4	10 - 3	-	-	9 - 5
	SPF	Standard	-	-	-	-	-	-	-	-	-	-	-	-	-	-	-

See Table 3.20B footnotes.

Copyright © American Wood Council. Downloaded/printed pursuant to License Agreement. No reproduction or transfer authorized.

Table 3.20B5 Maximum Exterior Loadbearing[1] and Non-Loadbearing Stud Lengths for Common Lumber Species Resisting Interior Zone Wind Loads - Stud Deflection Limit = H/240

(Fully Sheathed with a Minimum of 3/8" Wood Structural Panels)[a]

Exposure C H/240 3/8" WSP

Wind Speed 3-second gust (mph) (See Figure 1.1)			90			95			100			105		
Stud Spacing (in.)	Species	Grade	2x4	2x6	2x8	2x4	2x6	2x8	2x4	2x6	2x8	2x4	2x6	2x8
			Maximum Allowable Stud Length (ft-in.)[1]											
12	DFL	SS	14-0††	20-0†	20-0†	14-0††	20-0†	20-0†	14-0††	20-0†	20-0†	14-0††	20-0†	20-0†
	DFL	No.1	14-0††	20-0†	20-0†	14-0††	20-0†	20-0†	14-0††	20-0†	20-0†	13 - 10	20-0†	20-0†
	DFL	No.2	14-0††	20-0†	20-0†	14-0††	20-0†	20-0†	14-0††	20-0†	20-0†	13 - 7	20-0†	20-0†
	DFL	No.3/Stud	14-0††	20-0†	20-0†	13 - 10	20-0†	20-0†	13 - 5	20-0†	20-0†	12 - 11	20-0†	20-0†
	DFL	Standard	14-0††	-	-	13 - 10	-	-	13 - 5	-	-	12 - 11	-	-
	HF	SS	14-0††	20-0†	20-0†	14-0††	20-0†	20-0†	14-0††	20-0†	20-0†	13 - 7	20-0†	20-0†
	HF	No.1	14-0††	20-0†	20-0†	14-0††	20-0†	20-0†	13 - 8	20-0†	20-0†	13 - 3	20-0†	20-0†
	HF	No.2	14-0††	20-0†	20-0†	13 - 6	20-0†	20-0†	13 - 0	20-0†	20-0†	12 - 7	19 - 6	20-0†
	HF	No.3/Stud	13 - 8	20-0†	20-0†	13 - 2	20-0†	20-0†	12 - 8	19 - 7	20-0†	12 - 3	19 - 0	20-0†
	HF	Standard	13 - 8	-	-	13 - 2	-	-	12 - 8	-	-	12 - 3	-	-
	SP	SS	14-0††	20-0†	20-0†	14-0††	20-0†	20-0†	14-0††	20-0†	20-0†	14-0††	20-0†	20-0†
	SP	No.1	14-0††	20-0†	20-0†	14-0††	20-0†	20-0†	14-0††	20-0†	20-0†	13 - 7	20-0†	20-0†
	SP	No.2	14-0††	20-0†	20-0†	13 - 10	20-0†	20-0†	13 - 5	20-0†	20-0†	12 - 11	20-0†	20-0†
	SP	No.3	14-0††	20-0†	20-0†	13 - 6	20-0†	20-0†	13 - 0	20-0†	20-0†	12 - 7	19 - 6	20-0†
	SP	Stud	14-0††	20-0†	20-0†	13 - 6	20-0†	20-0†	13 - 0	20-0†	20-0†	12 - 7	19 - 6	20-0†
	SP	Standard	13 - 8	-	-	13 - 2	-	-	12 - 5	-	-	11 - 10	-	-
	SPF	SS	14-0††	20-0†	20-0†	14-0††	20-0†	20-0†	13 - 8	20-0†	20-0†	13 - 3	20-0†	20-0†
	SPF	No.1	14-0††	20-0†	20-0†	13 - 10	20-0†	20-0†	13 - 5	20-0†	20-0†	12 - 11	20-0†	20-0†
	SPF	No.2	14-0††	20-0†	20-0†	13 - 10	20-0†	20-0†	13 - 5	20-0†	20-0†	12 - 11	20-0†	20-0†
	SPF	No.3/Stud	13 - 8	20-0†	20-0†	13 - 2	20-0†	20-0†	12 - 8	19 - 7	20-0†	12 - 3	19 - 0	20-0†
	SPF	Standard	13 - 8	-	-	13 - 2	-	-	12 - 8	-	-	12 - 3	-	-
16	DFL	SS	14-0††	20-0†	20-0†	14 - 0	20-0†	20-0†	13 - 6	20-0†	20-0†	13 - 0	20-0†	20-0†
	DFL	No.1	13 - 11	20-0†	20-0†	13 - 5	20-0†	20-0†	12 - 11	20-0†	20-0†	12 - 6	19 - 4	20-0†
	DFL	No.2	13 - 8	20-0†	20-0†	13 - 2	20-0†	20-0†	12 - 8	19 - 7	20-0†	12 - 3	19 - 0	20-0†
	DFL	No.3/Stud	13 - 0	20-0†	20-0†	12 - 6	19 - 5	20-0†	12 - 1	18 - 9	20-0†	11 - 8	18 - 1	20-0†
	DFL	Standard	13 - 0	-	-	12 - 6	-	-	11 - 10	-	-	11 - 2	-	-
	HF	SS	13 - 8	20-0†	20-0†	13 - 2	20-0†	20-0†	12 - 8	19 - 7	20-0†	12 - 3	19 - 0	20-0†
	HF	No.1	13 - 4	20-0†	20-0†	12 - 10	19 - 11	20-0†	12 - 5	19 - 2	20-0†	12 - 0	18 - 6	20-0†
	HF	No.2	12 - 8	19 - 8	20-0†	12 - 3	18 - 11	20-0†	11 - 9	18 - 3	20-0†	11 - 5	17 - 8	20-0†
	HF	No.3/Stud	12 - 4	19 - 1	20-0†	11 - 11	18 - 5	20-0†	11 - 6	17 - 9	20-0†	11 - 1	17 - 2	20-0†
	HF	Standard	12 - 4	-	-	11 - 11	-	-	11 - 6	-	-	10 - 11	-	-
	SP	SS	14-0††	20-0†	20-0†	13 - 8	20-0†	20-0†	13 - 2	20-0†	20-0†	12 - 9	19 - 9	20-0†
	SP	No.1	13 - 8	20-0†	20-0†	13 - 2	20-0†	20-0†	12 - 8	19 - 7	20-0†	12 - 3	19 - 0	20-0†
	SP	No.2	13 - 0	20-0†	20-0†	12 - 6	19 - 5	20-0†	12 - 1	18 - 9	20-0†	11 - 8	18 - 1	20-0†
	SP	No.3	12 - 8	19 - 8	20-0†	12 - 3	18 - 11	20-0†	11 - 9	18 - 1	20-0†	11 - 5	17 - 2	20-0†
	SP	Stud	12 - 8	19 - 8	20-0†	12 - 3	18 - 11	20-0†	11 - 9	18 - 1	20-0†	11 - 5	17 - 2	20-0†
	SP	Standard	11 - 11	-	-	11 - 3	-	-	10 - 8	-	-	10 - 1	-	-
	SPF	SS	13 - 4	20-0†	20-0†	12 - 10	19 - 11	20-0†	12 - 5	19 - 2	20-0†	12 - 0	18 - 6	20-0†
	SPF	No.1	13 - 0	20-0†	20-0†	12 - 6	19 - 5	20-0†	12 - 1	18 - 9	20-0†	11 - 8	18 - 1	20-0†
	SPF	No.2	13 - 0	20-0†	20-0†	12 - 6	19 - 5	20-0†	12 - 1	18 - 9	20-0†	11 - 8	18 - 1	20-0†
	SPF	No.3/Stud	12 - 4	19 - 1	20-0†	11 - 11	18 - 5	20-0†	11 - 6	17 - 9	20-0†	11 - 1	17 - 2	20-0†
	SPF	Standard	12 - 4	-	-	11 - 11	-	-	11 - 6	-	-	10 - 11	-	-
24	DFL	SS	12 - 7	19 - 6	20-0†	12 - 1	18 - 9	20-0†	11 - 8	18 - 1	20-0†	11 - 4	17 - 6	20-0†
	DFL	No.1	12 - 1	18 - 9	20-0†	11 - 8	18 - 0	20-0†	11 - 3	17 - 5	20-0†	10 - 10	16 - 10	20-0†
	DFL	No.2	11 - 10	18 - 4	20-0†	11 - 5	17 - 8	20-0†	11 - 0	17 - 0	20-0†	10 - 8	16 - 5	20-0†
	DFL	No.3/Stud	11 - 4	17 - 6	20-0†	10 - 11	16 - 10	20-0†	10 - 6	16 - 0	19 - 9	10 - 2	15 - 2	18 - 9
	DFL	Standard	10 - 8	-	-	10 - 0	-	-	9 - 6	-	-	9 - 0	-	-
	HF	SS	11 - 10	18 - 4	20-0†	11 - 5	17 - 8	20-0†	11 - 0	17 - 0	20-0†	10 - 8	16 - 5	20-0†
	HF	No.1	11 - 7	17 - 11	20-0†	11 - 2	17 - 3	20-0†	10 - 9	16 - 8	20-0†	10 - 5	16 - 1	20-0†
	HF	No.2	11 - 0	17 - 1	20-0†	10 - 7	16 - 5	20-0†	10 - 3	15 - 10	20-0†	9 - 11	15 - 4	19 - 11
	HF	No.3/Stud	10 - 9	16 - 7	20-0†	10 - 4	16 - 0	20-0†	10 - 0	15 - 5	19 - 3	9 - 7	14 - 9	18 - 3
	HF	Standard	10 - 5	-	-	9 - 10	-	-	9 - 3	-	-	8 - 10	-	-
	SP	SS	12 - 4	19 - 1	20-0†	11 - 11	18 - 5	20-0†	11 - 6	17 - 9	20-0†	11 - 1	17 - 2	20-0†
	SP	No.1	11 - 10	18 - 4	20-0†	11 - 5	17 - 8	20-0†	11 - 0	17 - 0	20-0†	10 - 8	16 - 5	20-0†
	SP	No.2	11 - 4	17 - 6	20-0†	10 - 11	16 - 10	20-0†	10 - 6	16 - 3	20-0†	10 - 2	15 - 8	20-0†
	SP	No.3	11 - 0	16 - 4	20-0†	10 - 7	15 - 5	18 - 11	10 - 2	14 - 7	17 - 11	9 - 8	13 - 10	17 - 0
	SP	Stud	11 - 0	16 - 4	20-0†	10 - 7	15 - 5	18 - 11	10 - 2	14 - 7	17 - 11	9 - 8	13 - 10	17 - 0
	SP	Standard	9 - 7	-	-	9 - 1	-	-	8 - 7	-	-	8 - 2	-	-
	SPF	SS	11 - 7	17 - 11	20-0†	11 - 2	17 - 3	20-0†	10 - 9	16 - 8	20-0†	10 - 5	16 - 1	20-0†
	SPF	No.1	11 - 4	17 - 6	20-0†	10 - 11	16 - 10	20-0†	10 - 6	16 - 3	20-0†	10 - 2	15 - 8	20-0†
	SPF	No.2	11 - 4	17 - 6	20-0†	10 - 11	16 - 10	20-0†	10 - 6	16 - 3	20-0†	10 - 2	15 - 8	20-0†
	SPF	No.3/Stud	10 - 9	16 - 7	20-0†	10 - 4	16 - 0	20-0†	10 - 0	15 - 5	19 - 3	9 - 7	14 - 9	18 - 3
	SPF	Standard	10 - 5	-	-	9 - 10	-	-	9 - 3	-	-	8 - 10	-	-

See Table 3.20B footnotes.

Copyright © American Wood Council. Downloaded/printed pursuant to License Agreement. No reproduction or transfer authorized.

Table 3.20B5 (Cont.) **Maximum Exterior Loadbearing[1] and Non-Loadbearing Stud Lengths for Common Lumber Species Resisting Interior Zone Wind Loads - Stud Deflection Limit = H/240**

(Fully Sheathed with a Minimum of 3/8" Wood Structural Panels)[a]

Exposure C H/240 3/8" WSP

Wind Speed 3-second gust (mph) (See Figure 1.1)			110			115			120			130			140		
Stud Spacing (in.)	Species	Grade	2x4	2x6	2x8	2x4	2x6	2x8	2x4	2x6	2x8	2x4	2x6	2x8	2x4	2x6	2x8
			Maximum Allowable Stud Length (ft-in.)[1]														
12	DFL	SS	13 - 11	20-0†	20-0†	13 - 6	20-0†	20-0†	13 - 1	20-0†	20-0†	12 - 5	19 - 2	20-0†	11 - 9	18 - 3	20-0†
	DFL	No.1	13 - 5	20-0†	20-0†	13 - 0	20-0†	20-0†	12 - 7	19 - 6	20-0†	11 - 11	18 - 5	20-0†	11 - 4	17 - 6	20-0†
	DFL	No.2	13 - 1	20-0†	20-0†	12 - 9	19 - 8	20-0†	12 - 4	19 - 1	20-0†	11 - 8	18 - 1	20-0†	11 - 1	17 - 2	20-0†
	DFL	No.3/Stud	12 - 6	19 - 4	20-0†	12 - 2	18 - 9	20-0†	11 - 9	18 - 3	20-0†	11 - 2	17 - 3	20-0†	10 - 7	16 - 2	20 - 0
	DFL	Standard	12 - 5	-	-	11 - 10	-	-	11 - 4	-	-	10 - 5	-	-	9 - 7	-	-
	HF	SS	13 - 1	20-0†	20-0†	12 - 9	19 - 8	20-0†	12 - 4	19 - 1	20-0†	11 - 8	18 - 1	20-0†	11 - 1	17 - 2	20-0†
	HF	No.1	12 - 10	19 - 10	20-0†	12 - 5	19 - 3	20-0†	12 - 1	18 - 8	20-0†	11 - 5	17 - 8	20-0†	10 - 10	16 - 9	20-0†
	HF	No.2	12 - 2	18 - 11	20-0†	11 - 10	18 - 4	20-0†	11 - 6	17 - 9	20-0†	10 - 10	16 - 10	20-0†	10 - 4	15 - 11	20-0†
	HF	No.3/Stud	11 - 10	18 - 4	20-0†	11 - 6	17 - 10	20-0†	11 - 2	17 - 3	20-0†	10 - 7	16 - 4	20-0†	10 - 0	15 - 6	19 - 5
	HF	Standard	11 - 10	-	-	11 - 6	-	-	11 - 1	-	-	10 - 2	-	-	9 - 5	-	-
	SP	SS	13 - 8	20-0†	20-0†	13 - 3	20-0†	20-0†	12 - 10	19 - 11	20-0†	12 - 2	18 - 10	20-0†	11 - 7	17 - 10	20-0†
	SP	No.1	13 - 1	20-0†	20-0†	12 - 9	19 - 8	20-0†	12 - 4	19 - 1	20-0†	11 - 8	18 - 1	20-0†	11 - 1	17 - 2	20-0†
	SP	No.2	12 - 6	19 - 4	20-0†	12 - 2	18 - 9	20-0†	11 - 9	18 - 3	20-0†	11 - 2	17 - 3	20-0†	10 - 7	16 - 4	20-0†
	SP	No.3	12 - 2	18 - 11	20-0†	11 - 10	18 - 2	20-0†	11 - 6	17 - 5	20-0†	10 - 10	15 - 11	19 - 7	10 - 3	14 - 9	18 - 1
	SP	Stud	12 - 2	18 - 11	20-0†	11 - 10	18 - 2	20-0†	11 - 6	17 - 5	20-0†	10 - 10	15 - 11	19 - 7	10 - 3	14 - 9	18 - 1
	SP	Standard	11 - 3	-	-	10 - 8	-	-	10 - 3	-	-	9 - 5	-	-	8 - 8	-	-
	SPF	SS	12 - 10	19 - 10	20-0†	12 - 5	19 - 3	20-0†	12 - 1	18 - 8	20-0†	11 - 5	17 - 8	20-0†	10 - 10	16 - 9	20-0†
	SPF	No.1	12 - 6	19 - 4	20-0†	12 - 2	18 - 9	20-0†	11 - 9	18 - 3	20-0†	11 - 2	17 - 3	20-0†	10 - 7	16 - 4	20-0†
	SPF	No.2	12 - 6	19 - 4	20-0†	12 - 2	18 - 9	20-0†	11 - 9	18 - 3	20-0†	11 - 2	17 - 3	20-0†	10 - 7	16 - 4	20-0†
	SPF	No.3/Stud	11 - 10	18 - 4	20-0†	11 - 6	17 - 10	20-0†	11 - 2	17 - 3	20-0†	10 - 7	16 - 4	20-0†	10 - 0	15 - 6	19 - 5
	SPF	Standard	11 - 10	-	-	11 - 6	-	-	11 - 1	-	-	10 - 2	-	-	9 - 5	-	-
16	DFL	SS	12 - 7	19 - 6	20-0†	12 - 3	18 - 11	20-0†	11 - 10	18 - 4	20-0†	11 - 3	17 - 4	20-0†	10 - 8	16 - 6	20-0†
	DFL	No.1	12 - 1	18 - 9	20-0†	11 - 9	18 - 2	20-0†	11 - 5	17 - 8	20-0†	10 - 9	16 - 8	20-0†	10 - 3	15 - 10	20-0†
	DFL	No.2	11 - 10	18 - 4	20-0†	11 - 6	17 - 10	20-0†	11 - 2	17 - 3	20-0†	10 - 7	16 - 4	20-0†	10 - 0	15 - 6	20-0†
	DFL	No.3/Stud	11 - 4	17 - 6	20-0†	11 - 0	17 - 0	20-0†	10 - 8	16 - 4	20-0†	10 - 1	15 - 0	18 - 6	9 - 7	13 - 10	17 - 1
	DFL	Standard	10 - 8	-	-	10 - 2	-	-	9 - 9	-	-	8 - 11	-	-	8 - 3	-	-
	HF	SS	11 - 10	18 - 4	20-0†	11 - 6	17 - 10	20-0†	11 - 2	17 - 3	20-0†	10 - 7	16 - 4	20-0†	10 - 0	15 - 6	20-0†
	HF	No.1	11 - 7	17 - 11	20-0†	11 - 3	17 - 5	20-0†	10 - 11	16 - 11	20-0†	10 - 4	16 - 0	20-0†	9 - 10	15 - 2	19 - 9
	HF	No.2	11 - 0	17 - 1	20-0†	10 - 8	16 - 7	20-0†	10 - 5	16 - 1	20-0†	9 - 10	15 - 2	19 - 9	9 - 4	14 - 5	18 - 9
	HF	No.3/Stud	10 - 9	16 - 7	20-0†	10 - 5	16 - 1	20-0†	10 - 1	15 - 7	19 - 8	9 - 7	14 - 7	18 - 1	9 - 1	13 - 6	16 - 8
	HF	Standard	10 - 5	-	-	9 - 11	-	-	9 - 6	-	-	8 - 8	-	-	8 - 1	-	-
	SP	SS	12 - 4	19 - 2	20-0†	12 - 0	18 - 7	20-0†	11 - 8	18 - 0	20-0†	11 - 0	17 - 0	20-0†	10 - 5	16 - 2	20-0†
	SP	No.1	11 - 10	18 - 4	20-0†	11 - 6	17 - 10	20-0†	11 - 2	17 - 3	20-0†	10 - 7	16 - 4	20-0†	10 - 0	15 - 6	20-0†
	SP	No.2	11 - 4	17 - 6	20-0†	11 - 0	17 - 0	20-0†	10 - 8	16 - 6	20-0†	10 - 1	15 - 7	20-0†	9 - 7	14 - 10	19 - 3
	SP	No.3	11 - 0	16 - 4	20-0†	10 - 8	15 - 7	19 - 2	10 - 4	14 - 11	18 - 4	9 - 6	13 - 8	16 - 10	8 - 10	12 - 7	15 - 6
	SP	Stud	11 - 0	16 - 4	20-0†	10 - 8	15 - 7	19 - 2	10 - 4	14 - 11	18 - 4	9 - 6	13 - 8	16 - 10	8 - 10	12 - 7	15 - 6
	SP	Standard	9 - 7	-	-	9 - 2	-	-	8 - 9	-	-	8 - 1	-	-	-	-	-
	SPF	SS	11 - 7	17 - 11	20-0†	11 - 3	17 - 5	20-0†	10 - 11	16 - 11	20-0†	10 - 4	16 - 0	20-0†	9 - 10	15 - 2	19 - 9
	SPF	No.1	11 - 4	17 - 6	20-0†	11 - 0	17 - 0	20-0†	10 - 8	16 - 6	20-0†	10 - 1	15 - 7	20-0†	9 - 7	14 - 10	19 - 3
	SPF	No.2	11 - 4	17 - 6	20-0†	11 - 0	17 - 0	20-0†	10 - 8	16 - 6	20-0†	10 - 1	15 - 7	20-0†	9 - 7	14 - 10	19 - 3
	SPF	No.3/Stud	10 - 9	16 - 7	20-0†	10 - 5	16 - 1	20-0†	10 - 1	15 - 7	19 - 8	9 - 7	14 - 7	18 - 1	9 - 1	13 - 6	16 - 8
	SPF	Standard	10 - 5	-	-	9 - 11	-	-	9 - 6	-	-	8 - 8	-	-	8 - 1	-	-
24	DFL	SS	10 - 11	16 - 11	20-0†	10 - 7	16 - 5	20-0†	10 - 3	15 - 11	20-0†	9 - 9	15 - 1	19 - 7	9 - 3	14 - 4	18 - 7
	DFL	No.1	10 - 6	16 - 3	20-0†	10 - 2	15 - 9	20-0†	9 - 11	15 - 4	19 - 11	9 - 4	14 - 6	18 - 10	8 - 11	13 - 9	17 - 11
	DFL	No.2	10 - 4	15 - 11	20-0†	10 - 0	15 - 5	20-0†	9 - 8	15 - 0	19 - 6	9 - 2	14 - 2	18 - 5	8 - 8	13 - 6	17 - 6
	DFL	No.3/Stud	9 - 10	14 - 5	17 - 10	9 - 6	13 - 9	17 - 0	9 - 3	13 - 2	16 - 3	8 - 6	12 - 1	14 - 11	7 - 10	11 - 2	13 - 9
	DFL	Standard	8 - 7	-	-	8 - 2	-	-	7 - 10	-	-	-	-	-	-	-	-
	HF	SS	10 - 4	15 - 11	20-0†	10 - 0	15 - 5	20-0†	9 - 8	15 - 0	19 - 6	9 - 2	14 - 2	18 - 5	8 - 8	13 - 6	17 - 6
	HF	No.1	10 - 1	15 - 7	20-0†	9 - 9	15 - 1	19 - 8	9 - 6	14 - 8	19 - 1	9 - 0	13 - 10	18 - 0	8 - 6	13 - 2	17 - 1
	HF	No.2	9 - 7	14 - 10	19 - 3	9 - 3	14 - 4	18 - 8	9 - 0	13 - 11	18 - 2	8 - 6	13 - 2	17 - 2	8 - 1	12 - 6	16 - 3
	HF	No.3/Stud	9 - 4	14 - 1	17 - 4	9 - 0	13 - 5	16 - 7	8 - 9	12 - 10	15 - 10	8 - 3	11 - 9	14 - 6	-	10 - 10	13 - 5
	HF	Standard	8 - 5	-	-	8 - 0	-	-	-	-	-	-	-	-	-	-	-
	SP	SS	10 - 9	16 - 7	20-0†	10 - 5	16 - 1	20-0†	10 - 1	15 - 7	20-0†	9 - 7	14 - 9	19 - 3	9 - 1	14 - 0	18 - 3
	SP	No.1	10 - 4	15 - 11	20-0†	10 - 0	15 - 5	20-0†	9 - 8	15 - 0	19 - 6	9 - 2	14 - 2	18 - 5	8 - 8	13 - 6	17 - 6
	SP	No.2	9 - 10	15 - 2	19 - 9	9 - 6	14 - 9	19 - 2	9 - 3	14 - 4	18 - 7	8 - 9	13 - 6	17 - 7	8 - 4	12 - 10	16 - 8
	SP	No.3	9 - 2	13 - 2	16 - 2	8 - 9	12 - 6	15 - 5	8 - 4	12 - 0	14 - 9	-	11 - 0	13 - 6	-	10 - 2	12 - 6
	SP	Stud	9 - 2	13 - 2	16 - 2	8 - 9	12 - 6	15 - 5	8 - 4	12 - 0	14 - 9	-	11 - 0	13 - 6	-	10 - 2	12 - 6
	SP	Standard	-	-	-	-	-	-	-	-	-	-	-	-	-	-	-
	SPF	SS	10 - 1	15 - 7	20-0†	9 - 9	15 - 1	19 - 8	9 - 6	14 - 8	19 - 1	9 - 0	13 - 10	18 - 0	8 - 6	13 - 2	17 - 1
	SPF	No.1	9 - 10	15 - 2	19 - 9	9 - 6	14 - 9	19 - 2	9 - 3	14 - 4	18 - 7	8 - 9	13 - 6	17 - 7	8 - 4	12 - 10	16 - 8
	SPF	No.2	9 - 10	15 - 2	19 - 9	9 - 6	14 - 9	19 - 2	9 - 3	14 - 4	18 - 7	8 - 9	13 - 6	17 - 7	8 - 4	12 - 10	16 - 8
	SPF	No.3/Stud	9 - 4	14 - 1	17 - 4	9 - 0	13 - 5	16 - 7	8 - 9	12 - 10	15 - 10	8 - 3	11 - 9	14 - 6	-	10 - 10	13 - 5
	SPF	Standard	8 - 5	-	-	8 - 0	-	-	-	-	-	-	-	-	-	-	-

See Table 3.20B footnotes.

Copyright © American Wood Council. Downloaded/printed pursuant to License Agreement. No reproduction or transfer authorized.

Table 3.20B5 (Cont.) **Maximum Exterior Loadbearing[1] and Non-Loadbearing Stud Lengths for Common Lumber Species Resisting Interior Zone Wind Loads - Stud Deflection Limit = H/240**

(Fully Sheathed with a Minimum of 3/8" Wood Structural Panels)[a]

Exposure C H/240 3/8" WSP

Wind Speed 3-second gust (mph) (See Figure 1.1)			150			160			170			180			195		
Stud Spacing (in.)	Species	Grade	2x4	2x6	2x8	2x4	2x6	2x8	2x4	2x6	2x8	2x4	2x6	2x8	2x4	2x6	2x8
			Maximum Allowable Stud Length (ft-in.)[1]														
12	DFL	SS	11 - 3	17 - 4	20-0†	10 - 9	16 - 7	20-0†	10 - 3	15 - 11	20-0†	9 - 11	15 - 3	19 - 10	9 - 4	14 - 5	18 - 9
	DFL	No.1	10 - 9	16 - 8	20-0†	10 - 4	16 - 0	20-0†	9 - 11	15 - 4	19 - 11	9 - 6	14 - 8	19 - 1	9 - 0	13 - 11	18 - 1
	DFL	No.2	10 - 7	16 - 4	20-0†	10 - 1	15 - 7	20-0†	9 - 8	15 - 0	19 - 6	9 - 4	14 - 5	18 - 9	8 - 10	13 - 7	17 - 8
	DFL	No.3/Stud	10 - 1	15 - 0	18 - 6	9 - 8	14 - 0	17 - 4	9 - 3	13 - 1	16 - 2	8 - 8	12 - 4	15 - 3	8 - 0	11 - 4	14 - 0
	DFL	Standard	8 - 11	-	-	8 - 4	-	-	7 - 10	-	-	-	-	-	-	-	-
	HF	SS	10 - 7	16 - 4	20-0†	10 - 1	15 - 7	20-0†	9 - 8	15 - 0	19 - 6	9 - 4	14 - 5	18 - 9	8 - 10	13 - 7	17 - 8
	HF	No.1	10 - 4	16 - 0	20-0†	9 - 10	15 - 3	19 - 10	9 - 6	14 - 8	19 - 0	9 - 1	14 - 1	18 - 4	8 - 7	13 - 4	17 - 4
	HF	No.2	9 - 10	15 - 2	19 - 9	9 - 5	14 - 6	18 - 11	9 - 0	13 - 11	18 - 1	8 - 8	13 - 5	17 - 5	8 - 2	12 - 8	16 - 5
	HF	No.3/Stud	9 - 7	14 - 7	18 - 1	9 - 2	13 - 8	16 - 10	8 - 9	12 - 9	15 - 9	8 - 5	12 - 0	14 - 10	7 - 9	11 - 0	13 - 8
	HF	Standard	8 - 9	-	-	8 - 2	-	-	-	-	-	-	-	-	-	-	-
	SP	SS	11 - 0	17 - 0	20-0†	10 - 6	16 - 3	20-0†	10 - 1	15 - 7	20-0†	9 - 8	15 - 0	19 - 6	9 - 2	14 - 2	18 - 5
	SP	No.1	10 - 7	16 - 4	20-0†	10 - 1	15 - 7	20-0†	9 - 8	15 - 0	19 - 6	9 - 4	14 - 5	18 - 9	8 - 10	13 - 7	17 - 8
	SP	No.2	10 - 1	15 - 7	20-0†	9 - 8	14 - 11	19 - 5	9 - 3	14 - 3	18 - 7	8 - 11	13 - 9	17 - 10	8 - 5	13 - 0	16 - 11
	SP	No.3	9 - 6	13 - 8	16 - 10	8 - 11	12 - 9	15 - 8	8 - 4	12 - 0	14 - 8	7 - 10	11 - 3	13 - 10	-	10 - 4	12 - 8
	SP	Stud	9 - 6	13 - 8	16 - 10	8 - 11	12 - 9	15 - 8	8 - 4	12 - 0	14 - 8	7 - 10	11 - 3	13 - 10	-	10 - 4	12 - 8
	SP	Standard	8 - 1	-	-	-	-	-	-	-	-	-	-	-	-	-	-
	SPF	SS	10 - 4	16 - 0	20-0†	9 - 10	15 - 3	19 - 10	9 - 6	14 - 8	19 - 0	9 - 1	14 - 1	18 - 4	8 - 7	13 - 4	17 - 4
	SPF	No.1	10 - 1	15 - 7	20-0†	9 - 8	14 - 11	19 - 5	9 - 3	14 - 3	18 - 7	8 - 11	13 - 9	17 - 10	8 - 5	13 - 0	16 - 11
	SPF	No.2	10 - 1	15 - 7	20-0†	9 - 8	14 - 11	19 - 5	9 - 3	14 - 3	18 - 7	8 - 11	13 - 9	17 - 10	8 - 5	13 - 0	16 - 11
	SPF	No.3/Stud	9 - 7	14 - 7	18 - 1	9 - 2	13 - 8	16 - 10	8 - 9	12 - 9	15 - 9	8 - 5	12 - 0	14 - 10	7 - 9	11 - 0	13 - 8
	SPF	Standard	8 - 9	-	-	8 - 2	-	-	-	-	-	-	-	-	-	-	-
16	DFL	SS	10 - 2	15 - 8	20-0†	9 - 8	15 - 0	19 - 6	9 - 4	14 - 5	18 - 8	8 - 11	13 - 10	18 - 0	8 - 5	13 - 1	17 - 0
	DFL	No.1	9 - 9	15 - 1	19 - 8	9 - 4	14 - 5	18 - 9	8 - 11	13 - 10	18 - 0	8 - 7	13 - 3	17 - 3	8 - 2	12 - 7	16 - 4
	DFL	No.2	9 - 7	14 - 9	19 - 3	9 - 2	14 - 2	18 - 4	8 - 9	13 - 7	17 - 7	8 - 5	13 - 0	16 - 11	8 - 0	12 - 4	16 - 0
	DFL	No.3/Stud	9 - 1	12 - 10	15 - 11	8 - 5	12 - 0	14 - 10	7 - 11	11 - 3	13 - 11	-	10 - 7	13 - 1	-	9 - 8	12 - 0
	DFL	Standard	-	-	-	-	-	-	-	-	-	-	-	-	-	-	-
	HF	SS	9 - 7	14 - 9	19 - 3	9 - 2	14 - 2	18 - 4	8 - 9	13 - 7	17 - 7	8 - 5	13 - 0	16 - 11	8 - 0	12 - 4	16 - 0
	HF	No.1	9 - 4	14 - 5	18 - 9	8 - 11	13 - 10	18 - 0	8 - 7	13 - 3	17 - 3	8 - 3	12 - 9	16 - 7	7 - 9	12 - 0	15 - 8
	HF	No.2	8 - 11	13 - 9	17 - 10	8 - 6	13 - 2	17 - 1	8 - 2	12 - 7	16 - 5	7 - 10	12 - 1	15 - 9	-	11 - 5	14 - 11
	HF	No.3/Stud	8 - 8	12 - 6	15 - 6	8 - 3	11 - 8	14 - 5	-	10 - 11	13 - 6	-	10 - 4	12 - 9	-	9 - 5	11 - 8
	HF	Standard	-	-	-	-	-	-	-	-	-	-	-	-	-	-	-
	SP	SS	10 - 0	15 - 5	20-0†	9 - 6	14 - 9	19 - 2	9 - 1	14 - 1	18 - 4	8 - 9	13 - 7	17 - 8	8 - 4	12 - 10	16 - 8
	SP	No.1	9 - 7	14 - 9	19 - 3	9 - 2	14 - 2	18 - 4	8 - 9	13 - 7	17 - 7	8 - 5	13 - 0	16 - 11	8 - 0	12 - 4	16 - 0
	SP	No.2	9 - 1	14 - 1	18 - 4	8 - 9	13 - 6	17 - 6	8 - 4	12 - 11	16 - 10	8 - 0	12 - 5	16 - 1	-	11 - 9	14 - 9
	SP	No.3	8 - 2	11 - 9	14 - 5	-	10 - 11	13 - 5	-	10 - 3	12 - 7	-	9 - 8	11 - 10	-	8 - 10	10 - 11
	SP	Stud	8 - 2	11 - 9	14 - 5	-	10 - 11	13 - 5	-	10 - 3	12 - 7	-	9 - 8	11 - 10	-	8 - 10	10 - 11
	SP	Standard	-	-	-	-	-	-	-	-	-	-	-	-	-	-	-
	SPF	SS	9 - 4	14 - 5	18 - 9	8 - 11	13 - 10	18 - 0	8 - 7	13 - 3	17 - 3	8 - 3	12 - 9	16 - 7	7 - 9	12 - 0	15 - 8
	SPF	No.1	9 - 1	14 - 1	18 - 4	8 - 9	13 - 6	17 - 6	8 - 4	12 - 11	16 - 10	8 - 0	12 - 5	16 - 2	-	11 - 9	15 - 3
	SPF	No.2	9 - 1	14 - 1	18 - 4	8 - 9	13 - 6	17 - 6	8 - 4	12 - 11	16 - 10	8 - 0	12 - 5	16 - 2	-	11 - 9	15 - 3
	SPF	No.3/Stud	8 - 8	12 - 6	15 - 6	8 - 3	11 - 8	14 - 5	-	10 - 11	13 - 6	-	10 - 4	12 - 9	-	9 - 5	11 - 8
	SPF	Standard	-	-	-	-	-	-	-	-	-	-	-	-	-	-	-
24	DFL	SS	8 - 10	13 - 7	17 - 9	8 - 5	13 - 0	16 - 11	8 - 1	12 - 6	16 - 3	7 - 9	12 - 0	15 - 7	-	11 - 4	14 - 9
	DFL	No.1	8 - 6	13 - 1	17 - 0	8 - 1	12 - 6	16 - 3	7 - 9	12 - 0	15 - 7	-	11 - 6	14 - 10	-	10 - 11	13 - 8
	DFL	No.2	8 - 4	12 - 10	16 - 8	7 - 11	12 - 3	15 - 11	-	11 - 9	14 - 11	-	11 - 4	14 - 0	-	10 - 5	12 - 11
	DFL	No.3/Stud	-	10 - 4	12 - 9	-	9 - 8	11 - 11	-	9 - 1	11 - 2	-	8 - 6	10 - 6	-	7 - 10	9 - 8
	DFL	Standard	-	-	-	-	-	-	-	-	-	-	-	-	-	-	-
	HF	SS	8 - 4	12 - 10	16 - 8	7 - 11	12 - 3	15 - 11	-	11 - 9	15 - 3	-	11 - 4	14 - 8	-	10 - 8	13 - 11
	HF	No.1	8 - 1	12 - 7	16 - 4	7 - 9	12 - 0	15 - 7	-	11 - 6	14 - 11	-	11 - 1	14 - 4	-	10 - 5	13 - 5
	HF	No.2	-	11 - 11	15 - 6	-	11 - 5	14 - 10	-	10 - 11	14 - 3	-	10 - 6	13 - 7	-	9 - 11	12 - 6
	HF	No.3/Stud	-	10 - 1	12 - 5	-	9 - 5	11 - 7	-	8 - 10	10 - 11	-	8 - 4	10 - 3	-	-	9 - 5
	HF	Standard	-	-	-	-	-	-	-	-	-	-	-	-	-	-	-
	SP	SS	8 - 8	13 - 4	17 - 5	8 - 3	12 - 9	16 - 7	7 - 11	12 - 3	15 - 11	-	11 - 9	15 - 4	-	11 - 2	14 - 6
	SP	No.1	8 - 4	12 - 10	16 - 8	7 - 11	12 - 3	15 - 11	-	11 - 9	15 - 3	-	11 - 4	14 - 8	-	10 - 8	13 - 11
	SP	No.2	7 - 11	12 - 3	15 - 8	-	11 - 8	14 - 8	-	11 - 1	13 - 9	-	10 - 5	12 - 11	-	9 - 7	11 - 10
	SP	No.3	-	9 - 5	11 - 7	-	8 - 10	10 - 10	-	8 - 3	10 - 2	-	7 - 9	9 - 6	-	-	8 - 9
	SP	Stud	-	9 - 5	11 - 7	-	8 - 10	10 - 10	-	8 - 3	10 - 2	-	7 - 9	9 - 6	-	-	8 - 9
	SP	Standard	-	-	-	-	-	-	-	-	-	-	-	-	-	-	-
	SPF	SS	8 - 1	12 - 7	16 - 4	7 - 9	12 - 0	15 - 7	-	11 - 6	14 - 11	-	11 - 1	14 - 4	-	10 - 5	13 - 7
	SPF	No.1	7 - 11	12 - 3	15 - 11	-	11 - 8	15 - 3	-	11 - 3	14 - 7	-	10 - 9	13 - 10	-	10 - 2	12 - 8
	SPF	No.2	7 - 11	12 - 3	15 - 11	-	11 - 8	15 - 3	-	11 - 3	14 - 7	-	10 - 9	13 - 10	-	10 - 2	12 - 8
	SPF	No.3/Stud	-	10 - 1	12 - 5	-	9 - 5	11 - 7	-	8 - 10	10 - 11	-	8 - 4	10 - 3	-	-	9 - 5
	SPF	Standard	-	-	-	-	-	-	-	-	-	-	-	-	-	-	-

See Table 3.20B footnotes.

Copyright © American Wood Council. Downloaded/printed pursuant to License Agreement. No reproduction or transfer authorized.

Table 3.20B6 Maximum Exterior Loadbearing[1] and Non-Loadbearing Stud Lengths for Common Lumber Species Resisting Interior Zone Wind Loads - Stud Deflection Limit = H/360

(Fully Sheathed with a Minimum of 3/8" Wood Structural Panels)[a]

Exposure C H/360 3/8" WSP

Wind Speed 3-second gust (mph) (See Figure 1.1)			90			95			100			105		
Stud Spacing (in.)	Species	Grade	2x4	2x6	2x8	2x4	2x6	2x8	2x4	2x6	2x8	2x4	2x6	2x8
			Maximum Allowable Stud Length (ft-in.)[1]											
12	DFL	SS	13 - 11	20-0†	20-0†	13 - 5	20-0†	20-0†	12 - 11	20 - 0	20-0†	12 - 6	19 - 4	20-0†
	DFL	No.1	13 - 4	20-0†	20-0†	12 - 11	19 - 11	20-0†	12 - 5	19 - 3	20-0†	12 - 0	18 - 7	20-0†
	DFL	No.2	13 - 1	20-0†	20-0†	12 - 7	19 - 6	20-0†	12 - 2	18 - 10	20-0†	11 - 9	18 - 2	20-0†
	DFL	No.3/Stud	12 - 6	19 - 4	20-0†	12 - 0	18 - 8	20-0†	11 - 7	18 - 0	20-0†	11 - 3	17 - 4	20-0†
	DFL	Standard	12 - 6	-	-	12 - 0	-	-	11 - 7	-	-	11 - 3	-	-
	HF	SS	13 - 1	20-0†	20-0†	12 - 7	19 - 6	20-0†	12 - 2	18 - 10	20-0†	11 - 9	18 - 2	20-0†
	HF	No.1	12 - 10	19 - 10	20-0†	12 - 4	19 - 1	20-0†	11 - 11	18 - 5	20-0†	11 - 6	17 - 10	20-0†
	HF	No.2	12 - 2	18 - 10	20-0†	11 - 9	18 - 2	20-0†	11 - 4	17 - 6	20-0†	10 - 11	16 - 11	20-0†
	HF	No.3/Stud	11 - 10	18 - 4	20-0†	11 - 5	17 - 8	20-0†	11 - 0	17 - 0	20-0†	10 - 8	16 - 5	20-0†
	HF	Standard	11 - 10	-	-	11 - 5	-	-	11 - 0	-	-	10 - 8	-	-
	SP	SS	13 - 8	20-0†	20-0†	13 - 2	20-0†	20-0†	12 - 8	19 - 7	20-0†	12 - 3	19 - 0	20-0†
	SP	No.1	13 - 1	20-0†	20-0†	12 - 7	19 - 6	20-0†	12 - 2	18 - 10	20-0†	11 - 9	18 - 2	20-0†
	SP	No.2	12 - 6	19 - 4	20-0†	12 - 0	18 - 8	20-0†	11 - 7	18 - 0	20-0†	11 - 3	17 - 4	20-0†
	SP	No.3	12 - 2	18 - 10	20-0†	11 - 9	18 - 2	20-0†	11 - 4	17 - 6	20-0†	10 - 11	16 - 11	20-0†
	SP	Stud	12 - 2	18 - 10	20-0†	11 - 9	18 - 2	20-0†	11 - 4	17 - 6	20-0†	10 - 11	16 - 11	20-0†
	SP	Standard	11 - 10	-	-	11 - 5	-	-	11 - 0	-	-	10 - 8	-	-
	SPF	SS	12 - 10	19 - 10	20-0†	12 - 4	19 - 1	20-0†	11 - 11	18 - 5	20-0†	11 - 6	17 - 10	20-0†
	SPF	No.1	12 - 6	19 - 4	20-0†	12 - 0	18 - 8	20-0†	11 - 7	18 - 0	20-0†	11 - 3	17 - 4	20-0†
	SPF	No.2	12 - 6	19 - 4	20-0†	12 - 0	18 - 8	20-0†	11 - 7	18 - 0	20-0†	11 - 3	17 - 4	20-0†
	SPF	No.3/Stud	11 - 10	18 - 4	20-0†	11 - 5	17 - 8	20-0†	11 - 0	17 - 0	20-0†	10 - 8	16 - 5	20-0†
	SPF	Standard	11 - 10	-	-	11 - 5	-	-	11 - 0	-	-	10 - 8	-	-
16	DFL	SS	12 - 7	19 - 6	20-0†	12 - 1	18 - 9	20-0†	11 - 8	18 - 1	20-0†	11 - 4	17 - 6	20-0†
	DFL	No.1	12 - 1	18 - 9	20-0†	11 - 8	18 - 0	20-0†	11 - 3	17 - 5	20-0†	10 - 10	16 - 10	20-0†
	DFL	No.2	11 - 10	18 - 4	20-0†	11 - 5	17 - 8	20-0†	11 - 0	17 - 0	20-0†	10 - 8	16 - 5	20-0†
	DFL	No.3/Stud	11 - 4	17 - 6	20-0†	10 - 11	16 - 10	20-0†	10 - 6	16 - 3	20-0†	10 - 2	15 - 8	20-0†
	DFL	Standard	11 - 4	-	-	10 - 11	-	-	10 - 6	-	-	10 - 2	-	-
	HF	SS	11 - 10	18 - 4	20-0†	11 - 5	17 - 8	20-0†	11 - 0	17 - 0	20-0†	10 - 8	16 - 5	20-0†
	HF	No.1	11 - 7	17 - 11	20-0†	11 - 2	17 - 3	20-0†	10 - 9	16 - 8	20-0†	10 - 5	16 - 1	20-0†
	HF	No.2	11 - 0	17 - 1	20-0†	10 - 7	16 - 5	20-0†	10 - 3	15 - 10	20-0†	9 - 11	15 - 4	19 - 11
	HF	No.3/Stud	10 - 9	16 - 7	20-0†	10 - 4	16 - 0	20-0†	10 - 0	15 - 5	20-0†	9 - 7	14 - 11	19 - 4
	HF	Standard	10 - 9	-	-	10 - 4	-	-	10 - 0	-	-	9 - 7	-	-
	SP	SS	12 - 4	19 - 1	20-0†	11 - 11	18 - 5	20-0†	11 - 6	17 - 9	20-0†	11 - 1	17 - 2	20-0†
	SP	No.1	11 - 10	18 - 4	20-0†	11 - 5	17 - 8	20-0†	11 - 0	17 - 0	20-0†	10 - 8	16 - 5	20-0†
	SP	No.2	11 - 4	17 - 6	20-0†	10 - 11	16 - 10	20-0†	10 - 6	16 - 3	20-0†	10 - 2	15 - 8	20-0†
	SP	No.3	11 - 0	17 - 1	20-0†	10 - 7	16 - 5	20-0†	10 - 3	15 - 10	20-0†	9 - 11	15 - 4	19 - 11
	SP	Stud	11 - 0	17 - 1	20-0†	10 - 7	16 - 5	20-0†	10 - 3	15 - 10	20-0†	9 - 11	15 - 4	19 - 11
	SP	Standard	10 - 9	-	-	10 - 4	-	-	10 - 0	-	-	9 - 7	-	-
	SPF	SS	11 - 7	17 - 11	20-0†	11 - 2	17 - 3	20-0†	10 - 9	16 - 8	20-0†	10 - 5	16 - 1	20-0†
	SPF	No.1	11 - 4	17 - 6	20-0†	10 - 11	16 - 10	20-0†	10 - 6	16 - 3	20-0†	10 - 2	15 - 8	20-0†
	SPF	No.2	11 - 4	17 - 6	20-0†	10 - 11	16 - 10	20-0†	10 - 6	16 - 3	20-0†	10 - 2	15 - 8	20-0†
	SPF	No.3/Stud	10 - 9	16 - 7	20-0†	10 - 4	16 - 0	20-0†	10 - 0	15 - 5	20-0†	9 - 7	14 - 11	19 - 4
	SPF	Standard	10 - 9	-	-	10 - 4	-	-	10 - 0	-	-	9 - 7	-	-
24	DFL	SS	10 - 11	16 - 11	20-0†	10 - 6	16 - 3	20-0†	10 - 2	15 - 8	20-0†	9 - 10	15 - 2	19 - 9
	DFL	No.1	10 - 6	16 - 3	20-0†	10 - 1	15 - 8	20-0†	9 - 9	15 - 1	19 - 8	9 - 5	14 - 7	19 - 0
	DFL	No.2	10 - 3	15 - 11	20-0†	9 - 11	15 - 4	19 - 11	9 - 7	14 - 9	19 - 3	9 - 3	14 - 3	18 - 7
	DFL	No.3/Stud	9 - 10	15 - 2	19 - 9	9 - 5	14 - 7	19 - 0	9 - 1	14 - 1	18 - 4	8 - 10	13 - 8	17 - 9
	DFL	Standard	9 - 10	-	-	9 - 5	-	-	9 - 1	-	-	8 - 10	-	-
	HF	SS	10 - 3	15 - 11	20-0†	9 - 11	15 - 4	19 - 11	9 - 7	14 - 9	19 - 3	9 - 3	14 - 3	18 - 7
	HF	No.1	10 - 1	15 - 7	20-0†	9 - 8	15 - 0	19 - 6	9 - 4	14 - 5	18 - 9	9 - 0	14 - 0	18 - 2
	HF	No.2	9 - 7	14 - 10	19 - 3	9 - 3	14 - 3	18 - 6	8 - 11	13 - 9	17 - 10	8 - 7	13 - 3	17 - 3
	HF	No.3/Stud	9 - 4	14 - 5	18 - 9	9 - 0	13 - 10	18 - 0	8 - 8	13 - 4	17 - 5	8 - 4	12 - 11	16 - 10
	HF	Standard	9 - 4	-	-	9 - 0	-	-	8 - 8	-	-	8 - 4	-	-
	SP	SS	10 - 9	16 - 7	20-0†	10 - 4	16 - 0	20-0†	10 - 0	15 - 5	20-0†	9 - 7	14 - 11	19 - 4
	SP	No.1	10 - 3	15 - 11	20-0†	9 - 11	15 - 4	19 - 11	9 - 7	14 - 9	19 - 3	9 - 3	14 - 3	18 - 7
	SP	No.2	9 - 10	15 - 2	19 - 9	9 - 5	14 - 7	19 - 0	9 - 1	14 - 1	18 - 4	8 - 10	13 - 8	17 - 9
	SP	No.3	9 - 7	14 - 10	19 - 3	9 - 3	14 - 3	18 - 6	8 - 11	13 - 9	17 - 10	8 - 7	13 - 3	17 - 0
	SP	Stud	9 - 7	14 - 10	19 - 3	9 - 3	14 - 3	18 - 6	8 - 11	13 - 9	17 - 10	8 - 7	13 - 3	17 - 0
	SP	Standard	9 - 4	-	-	9 - 0	-	-	8 - 7	-	-	8 - 2	-	-
	SPF	SS	10 - 1	15 - 7	20-0†	9 - 8	15 - 0	19 - 6	9 - 4	14 - 5	18 - 9	9 - 0	14 - 0	18 - 2
	SPF	No.1	9 - 10	15 - 2	19 - 9	9 - 5	14 - 7	19 - 0	9 - 1	14 - 1	18 - 4	8 - 10	13 - 8	17 - 9
	SPF	No.2	9 - 10	15 - 2	19 - 9	9 - 5	14 - 7	19 - 0	9 - 1	14 - 1	18 - 4	8 - 10	13 - 8	17 - 9
	SPF	No.3/Stud	9 - 4	14 - 5	18 - 9	9 - 0	13 - 10	18 - 0	8 - 8	13 - 4	17 - 5	8 - 4	12 - 11	16 - 10
	SPF	Standard	9 - 4	-	-	9 - 0	-	-	8 - 8	-	-	8 - 4	-	-

See Table 3.20B footnotes.

Copyright © American Wood Council. Downloaded/printed pursuant to License Agreement. No reproduction or transfer authorized.

Table 3.20B6 (Cont.) **Maximum Exterior Loadbearing[1] and Non-Loadbearing Stud Lengths for Common Lumber Species Resisting Interior Zone Wind Loads - Stud Deflection Limit = H/360**

(Fully Sheathed with a Minimum of 3/8" Wood Structural Panels)[a]

Exposure C H/360 3/8" WSP

Wind Speed 3-second gust (mph) (See Figure 1.1)			110			115			120			130			140		
Stud Spacing (in.)	Species	Grade	2x4	2x6	2x8	2x4	2x6	2x8	2x4	2x6	2x8	2x4	2x6	2x8	2x4	2x6	2x8
			Maximum Allowable Stud Length (ft-in.)[1]														
12	DFL	SS	12 - 1	18 - 8	20-0†	11 - 9	18 - 2	20-0†	11 - 5	17 - 7	20-0†	10 - 9	16 - 8	20-0†	10 - 3	15 - 10	20-0†
	DFL	No.1	11 - 8	18 - 0	20-0†	11 - 3	17 - 5	20-0†	10 - 11	16 - 11	20-0†	10 - 4	16 - 0	20-0†	9 - 10	15 - 2	19 - 9
	DFL	No.2	11 - 5	17 - 7	20-0†	11 - 0	17 - 1	20-0†	10 - 9	16 - 7	20-0†	10 - 2	15 - 8	20-0†	9 - 7	14 - 11	19 - 4
	DFL	No.3/Stud	10 - 10	16 - 10	20-0†	10 - 6	16 - 4	20-0†	10 - 3	15 - 10	20-0†	9 - 8	15 - 0	19 - 5	9 - 2	14 - 2	18 - 6
	DFL	Standard	10 - 10	-	-	10 - 6	-	-	10 - 3	-	-	9 - 8	-	-	9 - 2	-	-
	HF	SS	11 - 5	17 - 7	20-0†	11 - 0	17 - 1	20-0†	10 - 9	16 - 7	20-0†	10 - 2	15 - 8	20-0†	9 - 7	14 - 11	19 - 4
	HF	No.1	11 - 2	17 - 3	20-0†	10 - 9	16 - 8	20-0†	10 - 6	16 - 2	20-0†	9 - 11	15 - 4	19 - 11	9 - 5	14 - 7	18 - 11
	HF	No.2	10 - 7	16 - 5	20-0†	10 - 3	15 - 11	20-0†	10 - 0	15 - 5	20-0†	9 - 5	14 - 7	19 - 0	9 - 0	13 - 10	18 - 0
	HF	No.3/Stud	10 - 4	15 - 11	20-0†	10 - 0	15 - 5	20-0†	9 - 8	15 - 0	19 - 6	9 - 2	14 - 2	18 - 5	8 - 8	13 - 6	17 - 6
	HF	Standard	10 - 4	-	-	10 - 0	-	-	9 - 8	-	-	9 - 2	-	-	8 - 8	-	-
	SP	SS	11 - 10	18 - 4	20-0†	11 - 6	17 - 10	20-0†	11 - 2	17 - 3	20-0†	10 - 7	16 - 4	20-0†	10 - 0	15 - 6	20-0†
	SP	No.1	11 - 5	17 - 7	20-0†	11 - 0	17 - 1	20-0†	10 - 9	16 - 7	20-0†	10 - 2	15 - 8	20-0†	9 - 7	14 - 11	19 - 4
	SP	No.2	10 - 10	16 - 10	20-0†	10 - 6	16 - 4	20-0†	10 - 3	15 - 10	20-0†	9 - 8	15 - 0	19 - 5	9 - 2	14 - 2	18 - 6
	SP	No.3	10 - 7	16 - 5	20-0†	10 - 3	15 - 11	20-0†	10 - 0	15 - 5	20-0†	9 - 5	14 - 7	19 - 0	9 - 0	13 - 10	18 - 0
	SP	Stud	10 - 7	16 - 5	20-0†	10 - 3	15 - 11	20-0†	10 - 0	15 - 5	20-0†	9 - 5	14 - 7	19 - 0	9 - 0	13 - 10	18 - 0
	SP	Standard	10 - 4	-	-	10 - 0	-	-	9 - 8	-	-	9 - 2	-	-	8 - 8	-	-
	SPF	SS	11 - 2	17 - 3	20-0†	10 - 9	16 - 8	20-0†	10 - 6	16 - 2	20-0†	9 - 11	15 - 4	19 - 11	9 - 5	14 - 7	18 - 11
	SPF	No.1	10 - 10	16 - 10	20-0†	10 - 6	16 - 4	20-0†	10 - 3	15 - 10	20-0†	9 - 8	15 - 0	19 - 5	9 - 2	14 - 2	18 - 6
	SPF	No.2	10 - 10	16 - 10	20-0†	10 - 6	16 - 4	20-0†	10 - 3	15 - 10	20-0†	9 - 8	15 - 0	19 - 5	9 - 2	14 - 2	18 - 6
	SPF	No.3/Stud	10 - 4	15 - 11	20-0†	10 - 0	15 - 5	20-0†	9 - 8	15 - 0	19 - 6	9 - 2	14 - 2	18 - 5	8 - 8	13 - 6	17 - 6
	SPF	Standard	10 - 4	-	-	10 - 0	-	-	9 - 8	-	-	9 - 2	-	-	8 - 8	-	-
16	DFL	SS	10 - 11	16 - 11	20-0†	10 - 7	16 - 5	20-0†	10 - 3	15 - 11	20-0†	9 - 9	15 - 1	19 - 7	9 - 3	14 - 4	18 - 7
	DFL	No.1	10 - 6	16 - 3	20-0†	10 - 2	15 - 9	20-0†	9 - 11	15 - 4	19 - 11	9 - 4	14 - 6	18 - 10	8 - 11	13 - 9	17 - 11
	DFL	No.2	10 - 4	15 - 11	20-0†	10 - 0	15 - 5	20-0†	9 - 8	15 - 0	19 - 6	9 - 2	14 - 2	18 - 5	8 - 8	13 - 6	17 - 6
	DFL	No.3/Stud	9 - 10	15 - 2	19 - 9	9 - 6	14 - 9	19 - 2	9 - 3	14 - 4	18 - 7	8 - 9	13 - 6	17 - 7	8 - 4	12 - 10	16 - 8
	DFL	Standard	9 - 10	-	-	9 - 6	-	-	9 - 3	-	-	8 - 9	-	-	8 - 3	-	-
	HF	SS	10 - 4	15 - 11	20-0†	10 - 0	15 - 5	20-0†	9 - 8	15 - 0	19 - 6	9 - 2	14 - 2	18 - 5	8 - 8	13 - 6	17 - 6
	HF	No.1	10 - 1	15 - 7	20-0†	9 - 9	15 - 1	19 - 8	9 - 6	14 - 8	19 - 1	9 - 0	13 - 10	18 - 0	8 - 6	13 - 2	17 - 1
	HF	No.2	9 - 7	14 - 10	19 - 3	9 - 3	14 - 4	18 - 8	9 - 0	13 - 11	18 - 2	8 - 6	13 - 2	17 - 2	8 - 1	12 - 6	16 - 3
	HF	No.3/Stud	9 - 4	14 - 5	18 - 9	9 - 0	14 - 0	18 - 2	8 - 9	13 - 7	17 - 8	8 - 4	12 - 10	16 - 8	7 - 11	12 - 2	15 - 10
	HF	Standard	9 - 4	-	-	9 - 0	-	-	8 - 9	-	-	8 - 4	-	-	7 - 11	-	-
	SP	SS	10 - 9	16 - 7	20-0†	10 - 5	16 - 1	20-0†	10 - 1	15 - 7	20-0†	9 - 7	14 - 9	19 - 3	9 - 1	14 - 0	18 - 3
	SP	No.1	10 - 4	15 - 11	20-0†	10 - 0	15 - 5	20-0†	9 - 8	15 - 0	19 - 6	9 - 2	14 - 2	18 - 5	8 - 8	13 - 6	17 - 6
	SP	No.2	9 - 10	15 - 2	19 - 9	9 - 6	14 - 9	19 - 2	9 - 3	14 - 4	18 - 7	8 - 9	13 - 6	17 - 7	8 - 4	12 - 10	16 - 8
	SP	No.3	9 - 7	14 - 10	19 - 3	9 - 3	14 - 4	18 - 8	9 - 0	13 - 11	18 - 2	8 - 6	13 - 2	16 - 10	8 - 1	12 - 6	15 - 6
	SP	Stud	9 - 7	14 - 10	19 - 3	9 - 3	14 - 4	18 - 8	9 - 0	13 - 11	18 - 2	8 - 6	13 - 2	16 - 10	8 - 1	12 - 6	15 - 6
	SP	Standard	9 - 4	-	-	9 - 0	-	-	8 - 9	-	-	8 - 1	-	-	-	-	-
	SPF	SS	10 - 1	15 - 7	20-0†	9 - 9	15 - 1	19 - 8	9 - 6	14 - 8	19 - 1	9 - 0	13 - 10	18 - 0	8 - 6	13 - 2	17 - 1
	SPF	No.1	9 - 10	15 - 2	19 - 9	9 - 6	14 - 9	19 - 2	9 - 3	14 - 4	18 - 7	8 - 9	13 - 6	17 - 7	8 - 4	12 - 10	16 - 8
	SPF	No.2	9 - 10	15 - 2	19 - 9	9 - 6	14 - 9	19 - 2	9 - 3	14 - 4	18 - 7	8 - 9	13 - 6	17 - 7	8 - 4	12 - 10	16 - 8
	SPF	No.3/Stud	9 - 4	14 - 5	18 - 9	9 - 0	14 - 0	18 - 2	8 - 9	13 - 7	17 - 8	8 - 4	12 - 10	16 - 8	7 - 11	12 - 2	15 - 10
	SPF	Standard	9 - 4	-	-	9 - 0	-	-	8 - 9	-	-	8 - 4	-	-	7 - 11	-	-
24	DFL	SS	9 - 6	14 - 8	19 - 1	9 - 2	14 - 3	18 - 6	8 - 11	13 - 10	18 - 0	8 - 5	13 - 1	17 - 0	8 - 0	12 - 5	16 - 2
	DFL	No.1	9 - 2	14 - 1	18 - 4	8 - 10	13 - 8	17 - 10	8 - 7	13 - 3	17 - 3	8 - 2	12 - 7	16 - 4	-	11 - 11	15 - 6
	DFL	No.2	8 - 11	13 - 10	18 - 0	8 - 8	13 - 5	17 - 5	8 - 5	13 - 0	16 - 11	8 - 0	12 - 4	16 - 0	-	11 - 8	15 - 2
	DFL	No.3/Stud	8 - 6	13 - 2	17 - 2	8 - 3	12 - 10	16 - 8	8 - 0	12 - 5	16 - 2	-	11 - 9	14 - 11	-	11 - 2	13 - 9
	DFL	Standard	8 - 6	-	-	8 - 2	-	-	7 - 10	-	-	-	-	-	-	-	-
	HF	SS	8 - 11	13 - 10	18 - 0	8 - 8	13 - 5	17 - 5	8 - 5	13 - 0	16 - 11	8 - 0	12 - 4	16 - 0	-	11 - 8	15 - 2
	HF	No.1	8 - 9	13 - 6	17 - 7	8 - 6	13 - 1	17 - 1	8 - 3	12 - 9	16 - 7	7 - 9	12 - 0	15 - 8	-	11 - 5	14 - 10
	HF	No.2	8 - 4	12 - 10	16 - 9	8 - 1	12 - 6	16 - 3	7 - 10	12 - 1	15 - 9	-	11 - 5	14 - 11	-	10 - 10	14 - 2
	HF	No.3/Stud	8 - 1	12 - 6	16 - 3	7 - 10	12 - 1	15 - 9	-	11 - 9	15 - 4	-	11 - 2	14 - 6	-	10 - 7	13 - 5
	HF	Standard	8 - 1	-	-	7 - 10	-	-	-	-	-	-	-	-	-	-	-
	SP	SS	9 - 4	14 - 5	18 - 9	9 - 0	14 - 0	18 - 2	8 - 9	13 - 7	17 - 8	8 - 4	12 - 10	16 - 8	7 - 11	12 - 2	15 - 10
	SP	No.1	8 - 11	13 - 10	18 - 0	8 - 8	13 - 5	17 - 5	8 - 5	13 - 0	16 - 11	8 - 0	12 - 4	16 - 0	-	11 - 8	15 - 2
	SP	No.2	8 - 6	13 - 2	17 - 2	8 - 3	12 - 10	16 - 8	8 - 0	12 - 5	16 - 2	-	11 - 9	15 - 3	-	11 - 2	14 - 6
	SP	No.3	8 - 4	12 - 10	16 - 2	8 - 1	12 - 6	15 - 5	7 - 10	12 - 0	14 - 9	-	11 - 0	13 - 6	-	10 - 2	12 - 6
	SP	Stud	8 - 4	12 - 10	16 - 2	8 - 1	12 - 6	15 - 5	7 - 10	12 - 0	14 - 9	-	11 - 0	13 - 6	-	10 - 2	12 - 6
	SP	Standard	-	-	-	-	-	-	-	-	-	-	-	-	-	-	-
	SPF	SS	8 - 9	13 - 6	17 - 7	8 - 6	13 - 1	17 - 1	8 - 3	12 - 9	16 - 7	7 - 9	12 - 0	15 - 8	-	11 - 5	14 - 10
	SPF	No.1	8 - 6	13 - 2	17 - 2	8 - 3	12 - 10	16 - 8	8 - 0	12 - 5	16 - 2	-	11 - 9	15 - 3	-	11 - 2	14 - 6
	SPF	No.2	8 - 6	13 - 2	17 - 2	8 - 3	12 - 10	16 - 8	8 - 0	12 - 5	16 - 2	-	11 - 9	15 - 3	-	11 - 2	14 - 6
	SPF	No.3/Stud	8 - 1	12 - 6	16 - 3	7 - 10	12 - 1	15 - 9	-	11 - 9	15 - 4	-	11 - 2	14 - 6	-	10 - 7	13 - 5
	SPF	Standard	8 - 1	-	-	7 - 10	-	-	-	-	-	-	-	-	-	-	-

See Table 3.20B footnotes.

Copyright © American Wood Council. Downloaded/printed pursuant to License Agreement. No reproduction or transfer authorized.

Table 3.20B6 (Cont.) **Maximum Exterior Loadbearing[1] and Non-Loadbearing Stud Lengths for Common Lumber Species Resisting Interior Zone Wind Loads - Stud Deflection Limit = H/360**

(Fully Sheathed with a Minimum of 3/8" Wood Structural Panels)[a]

Exposure C H/360 3/8" WSP

Wind Speed 3-second gust (mph) (See Figure 1.1)			150			160			170			180			195		
Stud Spacing (in.)	Species	Grade	2x4	2x6	2x8	2x4	2x6	2x8	2x4	2x6	2x8	2x4	2x6	2x8	2x4	2x6	2x8
			Maximum Allowable Stud Length (ft-in.)[1]														
12	DFL	SS	9 - 9	15 - 1	19 - 7	9 - 4	14 - 5	18 - 9	8 - 11	13 - 10	17 - 11	8 - 7	13 - 3	17 - 3	8 - 1	12 - 6	16 - 4
	DFL	No.1	9 - 4	14 - 6	18 - 10	9 - 0	13 - 10	18 - 0	8 - 7	13 - 3	17 - 3	8 - 3	12 - 9	16 - 7	7 - 10	12 - 1	15 - 8
	DFL	No.2	9 - 2	14 - 2	18 - 5	8 - 9	13 - 7	17 - 8	8 - 5	13 - 0	16 - 11	8 - 1	12 - 6	16 - 3	-	11 - 10	15 - 4
	DFL	No.3/Stud	8 - 9	13 - 6	17 - 7	8 - 4	12 - 11	16 - 10	8 - 0	12 - 5	16 - 2	-	11 - 11	15 - 3	-	11 - 3	14 - 0
	DFL	Standard	8 - 9	-	-	8 - 4	-	-	7 - 10	-	-	-	-	-	-	-	-
	HF	SS	9 - 2	14 - 2	18 - 5	8 - 9	13 - 7	17 - 8	8 - 5	13 - 0	16 - 11	8 - 1	12 - 6	16 - 3	-	11 - 10	15 - 4
	HF	No.1	9 - 0	13 - 10	18 - 0	8 - 7	13 - 3	17 - 3	8 - 3	12 - 8	16 - 6	7 - 11	12 - 3	15 - 11	-	11 - 7	15 - 0
	HF	No.2	8 - 6	13 - 2	17 - 2	8 - 2	12 - 7	16 - 5	7 - 10	12 - 1	15 - 9	-	11 - 7	15 - 1	-	11 - 0	14 - 3
	HF	No.3/Stud	8 - 4	12 - 10	16 - 8	7 - 11	12 - 3	15 - 11	-	11 - 9	15 - 3	-	11 - 4	14 - 8	-	10 - 8	13 - 8
	HF	Standard	8 - 4	-	-	7 - 11	-	-	-	-	-	-	-	-	-	-	-
	SP	SS	9 - 7	14 - 9	19 - 3	9 - 2	14 - 2	18 - 4	8 - 9	13 - 7	17 - 7	8 - 5	13 - 0	16 - 11	8 - 0	12 - 4	16 - 0
	SP	No.1	9 - 2	14 - 2	18 - 5	8 - 9	13 - 7	17 - 8	8 - 5	13 - 0	16 - 11	8 - 1	12 - 6	16 - 3	-	11 - 10	15 - 4
	SP	No.2	8 - 9	13 - 6	17 - 7	8 - 4	12 - 11	16 - 10	8 - 0	12 - 5	16 - 2	-	11 - 11	15 - 6	-	11 - 3	14 - 8
	SP	No.3	8 - 6	13 - 2	16 - 10	8 - 2	12 - 7	15 - 8	7 - 10	12 - 0	14 - 8	-	11 - 3	13 - 10	-	10 - 4	12 - 8
	SP	Stud	8 - 6	13 - 2	16 - 10	8 - 2	12 - 7	15 - 8	7 - 10	12 - 0	14 - 8	-	11 - 3	13 - 10	-	10 - 4	12 - 8
	SP	Standard	8 - 1	-	-	-	-	-	-	-	-	-	-	-	-	-	-
	SPF	SS	9 - 0	13 - 10	18 - 0	8 - 7	13 - 3	17 - 3	8 - 3	12 - 8	16 - 6	7 - 11	12 - 3	15 - 11	-	11 - 7	15 - 0
	SPF	No.1	8 - 9	13 - 6	17 - 7	8 - 4	12 - 11	16 - 10	8 - 0	12 - 5	16 - 2	-	11 - 11	15 - 6	-	11 - 3	14 - 8
	SPF	No.2	8 - 9	13 - 6	17 - 7	8 - 4	12 - 11	16 - 10	8 - 0	12 - 5	16 - 2	-	11 - 11	15 - 6	-	11 - 3	14 - 8
	SPF	No.3/Stud	8 - 4	12 - 10	16 - 8	7 - 11	12 - 3	15 - 11	-	11 - 9	15 - 3	-	11 - 4	14 - 8	-	10 - 8	13 - 8
	SPF	Standard	8 - 4	-	-	7 - 11	-	-	-	-	-	-	-	-	-	-	-
16	DFL	SS	8 - 10	13 - 7	17 - 9	8 - 5	13 - 0	16 - 11	8 - 1	12 - 6	16 - 3	7 - 9	12 - 0	15 - 7	-	11 - 4	14 - 9
	DFL	No.1	8 - 6	13 - 1	17 - 0	8 - 1	12 - 6	16 - 3	7 - 9	12 - 0	15 - 7	-	11 - 6	15 - 0	-	10 - 11	14 - 2
	DFL	No.2	8 - 4	12 - 10	16 - 8	7 - 11	12 - 3	15 - 11	-	11 - 9	15 - 3	-	11 - 4	14 - 8	-	10 - 8	13 - 11
	DFL	No.3/Stud	7 - 11	12 - 3	15 - 11	-	11 - 8	14 - 10	-	11 - 3	13 - 11	-	10 - 7	13 - 1	-	9 - 8	12 - 0
	DFL	Standard	-	-	-	-	-	-	-	-	-	-	-	-	-	-	-
	HF	SS	8 - 4	12 - 10	16 - 8	7 - 11	12 - 3	15 - 11	-	11 - 9	15 - 3	-	11 - 4	14 - 8	-	10 - 8	13 - 11
	HF	No.1	8 - 1	12 - 7	16 - 4	7 - 9	12 - 0	15 - 7	-	11 - 6	14 - 11	-	11 - 1	14 - 4	-	10 - 5	13 - 7
	HF	No.2	-	11 - 11	15 - 6	-	11 - 5	14 - 10	-	10 - 11	14 - 3	-	10 - 6	13 - 8	-	9 - 11	12 - 11
	HF	No.3/Stud	-	11 - 7	15 - 1	-	11 - 1	14 - 5	-	10 - 8	13 - 6	-	10 - 3	12 - 9	-	9 - 5	11 - 8
	HF	Standard	-	-	-	-	-	-	-	-	-	-	-	-	-	-	-
	SP	SS	8 - 8	13 - 4	17 - 5	8 - 3	12 - 9	16 - 7	7 - 11	12 - 3	15 - 11	-	11 - 9	15 - 4	-	11 - 2	14 - 6
	SP	No.1	8 - 4	12 - 10	16 - 8	7 - 11	12 - 3	15 - 11	-	11 - 9	15 - 3	-	11 - 4	14 - 8	-	10 - 8	13 - 11
	SP	No.2	7 - 11	12 - 3	15 - 11	-	11 - 8	15 - 3	-	11 - 3	14 - 7	-	10 - 9	14 - 0	-	10 - 2	13 - 3
	SP	No.3	-	11 - 9	14 - 5	-	10 - 11	13 - 5	-	10 - 3	12 - 7	-	9 - 8	11 - 10	-	8 - 10	10 - 11
	SP	Stud	-	11 - 9	14 - 5	-	10 - 11	13 - 5	-	10 - 3	12 - 7	-	9 - 8	11 - 10	-	8 - 10	10 - 11
	SP	Standard	-	-	-	-	-	-	-	-	-	-	-	-	-	-	-
	SPF	SS	8 - 1	12 - 7	16 - 4	7 - 9	12 - 0	15 - 7	-	11 - 6	14 - 11	-	11 - 1	14 - 4	-	10 - 5	13 - 7
	SPF	No.1	7 - 11	12 - 3	15 - 11	-	11 - 8	15 - 3	-	11 - 3	14 - 7	-	10 - 9	14 - 0	-	10 - 2	13 - 3
	SPF	No.2	7 - 11	12 - 3	15 - 11	-	11 - 8	15 - 3	-	11 - 3	14 - 7	-	10 - 9	14 - 0	-	10 - 2	13 - 3
	SPF	No.3/Stud	-	11 - 7	15 - 1	-	11 - 1	14 - 5	-	10 - 8	13 - 6	-	10 - 3	12 - 9	-	9 - 5	11 - 8
	SPF	Standard	-	-	-	-	-	-	-	-	-	-	-	-	-	-	-
24	DFL	SS	-	11 - 10	15 - 4	-	11 - 4	14 - 8	-	10 - 10	14 - 1	-	10 - 5	13 - 6	-	9 - 10	12 - 10
	DFL	No.1	-	11 - 5	14 - 9	-	10 - 10	14 - 2	-	10 - 5	13 - 7	-	10 - 0	13 - 0	-	9 - 6	12 - 4
	DFL	No.2	-	11 - 2	14 - 6	-	10 - 8	13 - 10	-	10 - 2	13 - 3	-	9 - 10	12 - 9	-	9 - 3	12 - 1
	DFL	No.3/Stud	-	10 - 4	12 - 9	-	9 - 8	11 - 11	-	9 - 1	11 - 2	-	8 - 6	10 - 6	-	7 - 10	9 - 8
	DFL	Standard	-	-	-	-	-	-	-	-	-	-	-	-	-	-	-
	HF	SS	-	11 - 2	14 - 6	-	10 - 8	13 - 10	-	10 - 2	13 - 3	-	9 - 10	12 - 9	-	9 - 3	12 - 1
	HF	No.1	-	10 - 11	14 - 2	-	10 - 5	13 - 6	-	10 - 0	13 - 0	-	9 - 7	12 - 6	-	9 - 1	11 - 9
	HF	No.2	-	10 - 4	13 - 6	-	9 - 11	12 - 10	-	9 - 6	12 - 4	-	9 - 1	11 - 10	-	8 - 8	11 - 3
	HF	No.3/Stud	-	10 - 1	12 - 5	-	9 - 5	11 - 7	-	8 - 10	10 - 11	-	8 - 4	10 - 3	-	-	9 - 5
	HF	Standard	-	-	-	-	-	-	-	-	-	-	-	-	-	-	-
	SP	SS	-	11 - 7	15 - 1	-	11 - 1	14 - 5	-	10 - 8	13 - 10	-	10 - 3	13 - 3	-	9 - 8	12 - 7
	SP	No.1	-	11 - 2	14 - 6	-	10 - 8	13 - 10	-	10 - 2	13 - 3	-	9 - 10	12 - 9	-	9 - 3	12 - 1
	SP	No.2	-	10 - 8	13 - 10	-	10 - 2	13 - 3	-	9 - 9	12 - 8	-	9 - 4	12 - 2	-	8 - 10	11 - 6
	SP	No.3	-	9 - 5	11 - 7	-	8 - 10	10 - 10	-	8 - 3	10 - 2	-	7 - 9	9 - 6	-	-	8 - 9
	SP	Stud	-	9 - 5	11 - 7	-	8 - 10	10 - 10	-	8 - 3	10 - 2	-	7 - 9	9 - 6	-	-	8 - 9
	SP	Standard	-	-	-	-	-	-	-	-	-	-	-	-	-	-	-
	SPF	SS	-	10 - 11	14 - 2	-	10 - 5	13 - 6	-	10 - 0	13 - 0	-	9 - 7	12 - 6	-	9 - 1	11 - 9
	SPF	No.1	-	10 - 8	13 - 10	-	10 - 2	13 - 3	-	9 - 9	12 - 8	-	9 - 4	12 - 2	-	8 - 10	11 - 6
	SPF	No.2	-	10 - 8	13 - 10	-	10 - 2	13 - 3	-	9 - 9	12 - 8	-	9 - 4	12 - 2	-	8 - 10	11 - 6
	SPF	No.3/Stud	-	10 - 1	12 - 5	-	9 - 5	11 - 7	-	8 - 10	10 - 11	-	8 - 4	10 - 3	-	-	9 - 5
	SPF	Standard	-	-	-	-	-	-	-	-	-	-	-	-	-	-	-

See Table 3.20B footnotes.

Copyright © American Wood Council. Downloaded/printed pursuant to License Agreement. No reproduction or transfer authorized.

Table 3.20B Footnotes

† Allowable stud length exceeds 20 feet.

†† Maximum stud length for 2x4's is limited to 14 feet per Table 3.20C.

- Lumber grade not available or allowable stud length is less than 7 ft - 9 in. (for 8 ft wall height).

a Maximum stud lengths in Table 3.20B are based on interior zone loads and assume that all studs are covered on the inside with a minimum of 1/2 inch gypsum wallboard, attached in accordance with minimum building code requirements and sheathed on the exterior side with a minimum of 3/8 inch wood structural panel sheathing with all panel joints occurring over studs or blocking and attached using a minimum 8d common nails spaced a maximum of 6" on center at panel edges and 12" on center at intermediate framing members. To address additional end zone loading requirements, end zone stud spacings shall be multiplied by 0.80 for framing located within 4 feet of corners. The additional bending capacity provided by the reduced stud spacing is assumed to be sufficient to resist the additional end zone loading requirements.

1 Exterior studs shall be limited to a height between horizontal supports per Table 3.20C. DFL = Douglas Fir-Larch, HF = Hem-Fir, SP = Southern Pine, SPF = Spruce-Pine-Fir.

Table 3.20C Size, Height, and Spacing Limits for Wood Studs[1, 2]

	2x3	2x4	2x5	2x6	2x8
Loadbearing Studs Supporting	**Maximum Unsupported Stud Length (ft)**				
	-	10	10	10	10
	Maximum Stud Spacing (in. o.c.)				
Roof & Ceiling Only	-	24	24	24	24
1 Floor Only	-	24	24	24	24
Roof, Ceiling, & 1 Floor Only	-	16	16	24	24
2 Floors Only	-	16	16	24	24
Roof, Ceiling, & 2 Floors	-	-	-	16	24
Non-loadbearing Studs	**Maximum Unsupported Stud Length (ft)**				
	10	14	16	20	20
	Maximum Stud Spacing (in. o.c.)				
	16	24	24	24	24

1 Maximum stud lengths in Tables 3.20A and B are based on wind loads. For dead and live loads, stud lengths shall be limited to the requirements in this table.

2 Habitable attics shall be considered an additional floor for purposes of determining gravity and seismic loads in accordance with Section 3.1.3.1.

Copyright © American Wood Council. Downloaded/printed pursuant to License Agreement. No reproduction or transfer authorized.
AMERICAN WOOD COUNCIL

Table 3.21 Top Plate Requirements for Wind Exposures B & C

Building Dimension of Wall Containing Top Plate Splice (ft)	Numer of 16d Common Nails per Each Side of Splice[1,2,3]
12	5
16	6
20	8
24	10
28	11
32	13
36	14
40	16
50	20
60	24
70	28
80	32

1 Tabulated splice top plate to top plate connection shall not have more than 2-16d nails per 6".
2 Tabulated splice assume a building located in Exposure B or C.
3 Top plates shall be a minimum of stud grade material.

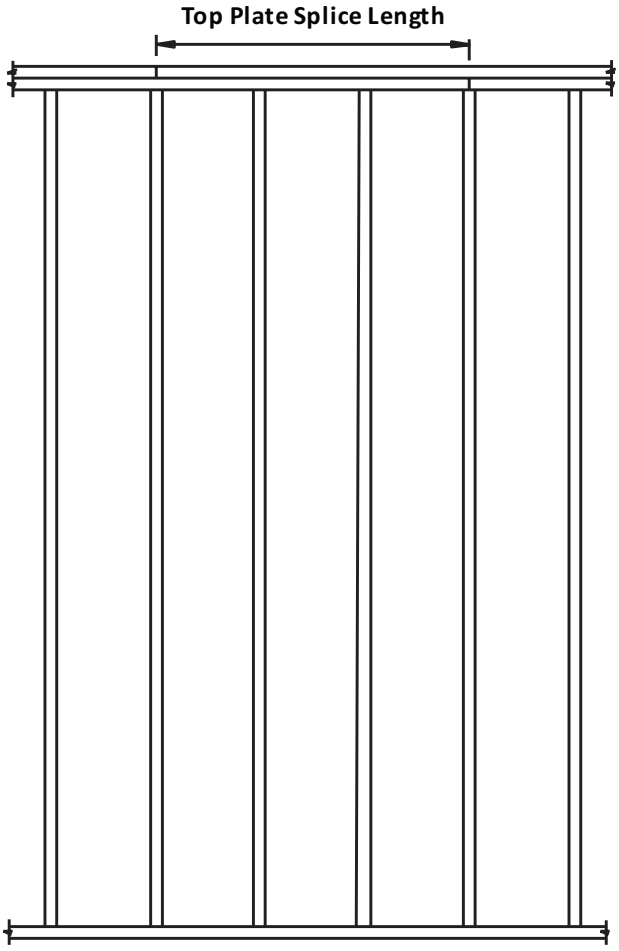

Copyright © American Wood Council. Downloaded/printed pursuant to License Agreement. No reproduction or transfer authorized.

This page left blank intentionally

Copyright © American Wood Council. Downloaded/printed pursuant to License Agreement. No reproduction or transfer authorized.
AMERICAN WOOD COUNCIL

Table 3.22A1 Laterally Unsupported (Dropped) Header Spans for Exterior Loadbearing Walls

Dropped Exterior

(Supporting a Roof and Ceiling)

Dead Load Assumptions: Roof/Ceiling Assembly = 20 psf, L/Δ_{LL}=240

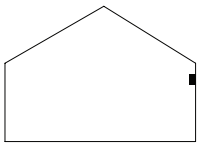

Headers Supporting	Size	Roof Live Load 20 psf			Ground Snow Load 30 psf			50 psf			70 psf		
		Building Width (ft)											
		12	24	36	12	24	36	12	24	36	12	24	36
Roof and Ceiling	Size	Maximum Header/Girder Spans (ft-in.) for Common Lumber Species[1,3,4]											
	1-2x6	4 - 4	3 - 4	2 - 9	3 - 11	3 - 0	2 - 7	3 - 4	2 - 7	2 - 2	3 - 0	2 - 4	2 - 0
	1-2x8	5 - 3	4 - 1	3 - 6	4 - 10	3 - 9	3 - 3	4 - 2	3 - 3	2 - 9	3 - 9	2 - 11	2 - 6
	1-2x10	6 - 0	4 - 9	4 - 0	5 - 7	4 - 5	3 - 9	4 - 10	3 - 10	3 - 3	4 - 4	3 - 5	2 - 11
	1-2x12	6 - 6	5 - 3	4 - 7	6 - 2	5 - 0	4 - 4	5 - 5	4 - 5	3 - 9	4 - 11	4 - 0	3 - 4
	2-2x4	4 - 4	3 - 3	2 - 9	3 - 11	3 - 0	2 - 7	3 - 4	2 - 7	2 - 2	3 - 0	2 - 4	1 - 11
	2-2x6	6 - 2	4 - 10	4 - 1	5 - 8	4 - 5	3 - 9	4 - 11	3 - 10	3 - 3	4 - 5	3 - 5	2 - 11
	2-2x8	7 - 2	5 - 9	4 - 11	6 - 9	5 - 5	4 - 8	5 - 11	4 - 8	4 - 0	5 - 4	4 - 3	3 - 7
	2-2x10	7 - 10	6 - 4	5 - 6	7 - 6	6 - 1	5 - 3	6 - 7	5 - 4	4 - 8	6 - 0	4 - 10	4 - 2
	2-2x12	8 - 5	6 - 10	6 - 0	8 - 1	6 - 7	5 - 10	7 - 2	5 - 11	5 - 2	6 - 6	5 - 5	4 - 9
	3-2x8	8 - 5	6 - 10	5 - 11	8 - 0	6 - 6	5 - 7	7 - 1	5 - 8	4 - 11	6 - 5	5 - 2	4 - 5
	3-2x10	9 - 2	7 - 5	6 - 6	8 - 9	7 - 2	6 - 3	7 - 9	6 - 4	5 - 6	7 - 1	5 - 9	5 - 0
	3-2x12	9 - 9	8 - 0	7 - 0	9 - 4	7 - 8	6 - 9	8 - 4	6 - 10	6 - 1	7 - 8	6 - 3	5 - 7
	4-2x8	9 - 4	7 - 7	6 - 8	8 - 11	7 - 3	6 - 4	7 - 11	6 - 5	5 - 7	7 - 2	5 - 10	5 - 0
	4-2x10	10 - 2	8 - 3	7 - 3	9 - 8	8 - 0	7 - 0	8 - 8	7 - 1	6 - 3	7 - 11	6 - 6	5 - 8
	4-2x12	10 - 10	8 - 10	7 - 9	10 - 4	8 - 7	7 - 6	9 - 3	7 - 8	6 - 9	8 - 6	7 - 0	6 - 2
	Size	Maximum Header/Girder Spans (ft-in.) for Glued Laminated Timber Beams[2,3,4]											
	3.125x5.500	8 - 5	6 - 10	5 - 8	8 - 1	6 - 3	5 - 3	7 - 0	5 - 4	4 - 6	6 - 2	4 - 9	4 - 0
	3.125x6.875	10 - 7	8 - 5	7 - 1	10 - 1	7 - 9	6 - 7	8 - 8	6 - 8	5 - 7	7 - 8	5 - 11	5 - 0
	3.125x8.250	12 - 8	10 - 1	8 - 5	12 - 0	9 - 3	7 - 10	10 - 3	8 - 0	6 - 9	9 - 2	7 - 1	6 - 0
	3.125x9.625	14 - 9	11 - 6	9 - 9	13 - 8	10 - 8	9 - 0	11 - 10	9 - 2	7 - 9	10 - 7	8 - 3	6 - 11
	3.125x11.000	16 - 1	12 - 10	10 - 11	15 - 1	12 - 0	10 - 2	13 - 2	10 - 4	8 - 10	11 - 10	9 - 3	7 - 10
	3.125x12.375	17 - 1	13 - 9	11 - 11	16 - 2	13 - 1	11 - 3	14 - 3	11 - 5	9 - 9	12 - 11	10 - 3	8 - 9
	3.125x13.750	17 - 10	14 - 7	12 - 8	17 - 0	13 - 11	12 - 1	15 - 1	12 - 3	10 - 7	13 - 9	11 - 1	9 - 6
	3.125x15.125	18 - 7	15 - 2	13 - 3	17 - 9	14 - 7	12 - 9	15 - 9	12 - 11	11 - 3	14 - 5	11 - 9	10 - 2
	3.125x16.500	19 - 2	15 - 8	13 - 9	18 - 4	15 - 1	13 - 3	16 - 4	13 - 5	11 - 9	15 - 0	12 - 3	10 - 9
	3.125x17.875	19 - 8	16 - 2	14 - 2	18 - 10	15 - 7	13 - 8	16 - 10	13 - 11	12 - 2	15 - 5	12 - 9	11 - 2
	3.125x19.250	20-0†	16 - 7	14 - 6	19 - 4	16 - 0	14 - 1	17 - 3	14 - 3	12 - 7	15 - 10	13 - 1	11 - 6
	3.125x20.625	20-0†	16 - 11	14 - 11	19 - 9	16 - 4	14 - 5	17 - 8	14 - 7	12 - 11	16 - 3	13 - 5	11 - 10
	3.125x22.000	20-0†	17 - 3	15 - 2	20-0†	16 - 8	14 - 9	18 - 1	14 - 11	13 - 2	16 - 7	13 - 9	12 - 1
	3.125x23.375	20-0†	17 - 7	15 - 6	20-0†	17 - 0	15 - 0	18 - 5	15 - 3	13 - 5	16 - 11	14 - 0	12 - 5
	3.125x24.750	20-0†	17 - 11	15 - 9	20-0†	17 - 4	15 - 4	18 - 9	15 - 6	13 - 9	17 - 2	14 - 3	12 - 8
	5.125x5.500	10 - 0	8 - 3	7 - 4	9 - 7	8 - 0	6 - 9	8 - 7	6 - 11	5 - 9	7 - 11	6 - 1	5 - 2
	5.125x6.875	12 - 5	10 - 4	9 - 2	12 - 0	10 - 0	8 - 5	10 - 9	8 - 7	7 - 3	9 - 11	7 - 8	6 - 5
	5.125x8.250	14 - 11	12 - 5	10 - 11	14 - 4	12 - 0	10 - 1	12 - 11	10 - 3	8 - 8	11 - 10	9 - 2	7 - 8
	5.125x9.625	17 - 5	14 - 5	12 - 9	16 - 9	13 - 11	11 - 9	15 - 1	12 - 0	10 - 1	13 - 9	10 - 8	9 - 0
	5.125x11.000	19 - 11	16 - 6	14 - 6	19 - 2	15 - 10	13 - 5	17 - 3	13 - 8	11 - 6	15 - 8	12 - 2	10 - 3
	5.125x12.375	20-0†	18 - 7	16 - 2	20-0†	17 - 9	15 - 0	19 - 5	15 - 3	12 - 11	17 - 7	13 - 7	11 - 6
	5.125x13.750	20-0†	20-0†	17 - 10	20-0†	19 - 7	16 - 7	20-0†	16 - 10	14 - 3	19 - 4	15 - 1	12 - 9
	5.125x15.125	20-0†	20-0†	19 - 5	20-0†	20-0†	18 - 1	20-0†	18 - 5	15 - 7	20-0†	16 - 5	13 - 11
	5.125x16.500	20-0†	20-0†	20-0†	20-0†	20-0†	19 - 6	20-0†	19 - 10	16 - 11	20-0†	17 - 9	15 - 1
	5.125x17.875	20-0†	20-0†	20-0†	20-0†	20-0†	20-0†	20-0†	20-0†	18 - 1	20-0†	19 - 0	16 - 3
	5.125x19.250	20-0†	20-0†	20-0†	20-0†	20-0†	20-0†	20-0†	20-0†	19 - 3	20-0†	20-0†	17 - 3
	5.125x20.625	20-0†	20-0†	20-0†	20-0†	20-0†	20-0†	20-0†	20-0†	20-0†	20-0†	20-0†	18 - 3
	5.125x22.000	20-0†	20-0†	20-0†	20-0†	20-0†	20-0†	20-0†	20-0†	20-0†	20-0†	20-0†	19 - 1
	5.125x23.375	20-0†	20-0†	20-0†	20-0†	20-0†	20-0†	20-0†	20-0†	20-0†	20-0†	20-0†	19 - 10
	5.125x24.750	20-0†	20-0†	20-0†	20-0†	20-0†	20-0†	20-0†	20-0†	20-0†	20-0†	20-0†	20-0†

† Spans are limited to 20 feet in length.

1 Tabulated spans are based on the lowest F_b, F_v, and E for #2 Grade Douglas Fir-Larch, Hem-Fir, Southern Pine, and Spruce-Pine-Fir. For #3 Grade lumber, spans shall be multiplied by 0.75.

2 Tabulated spans assume 20F combination glulam with a minimum F_{bx}=2,000psi, F_{vx}=210psi, and E=1,500,000psi.

3 The number of jack studs required at each end of the header shall be determined from Table 3.22F.

4 Spans checked for live load deflection only.

Copyright © American Wood Council. Downloaded/printed pursuant to License Agreement. No reproduction or transfer authorized.

Table 3.22A2 Laterally Supported (Raised) Header Spans for Exterior Loadbearing Walls

Raised Exterior

(Supporting a Roof and Ceiling)

Dead Load Assumptions: Roof/Ceiling Assembly = 20 psf, L/Δ_{LL}=240

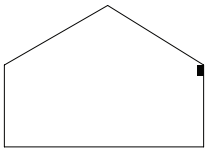

Headers Supporting	Size	Roof Live Load 20 psf			Ground Snow Load 30 psf			50 psf			70 psf		
		Building Width (ft)											
		12	24	36	12	24	36	12	24	36	12	24	36
		Maximum Header/Girder Spans (ft-in.) for Common Lumber Species[1,3,4]											
Roof and Ceiling	1-2x6	4 - 5	3 - 4	2 - 10	4 - 0	3 - 1	2 - 7	3 - 5	2 - 8	2 - 3	3 - 0	2 - 4	2 - 0
	1-2x8	5 - 8	4 - 3	3 - 7	5 - 1	3 - 11	3 - 3	4 - 4	3 - 4	2 - 10	3 - 10	3 - 0	2 - 6
	1-2x10	6 - 8	5 - 1	4 - 3	6 - 0	4 - 8	3 - 11	5 - 2	4 - 0	3 - 4	4 - 7	3 - 6	3 - 0
	1-2x12	7 - 10	5 - 11	5 - 0	7 - 1	5 - 5	4 - 7	6 - 1	4 - 8	3 - 11	5 - 5	4 - 2	3 - 6
	2-2x4	4 - 5	3 - 4	2 - 9	4 - 0	3 - 1	2 - 7	3 - 5	2 - 7	2 - 2	3 - 0	2 - 4	2 - 0
	2-2x6	6 - 7	5 - 0	4 - 2	6 - 0	4 - 7	3 - 10	5 - 1	3 - 11	3 - 3	4 - 6	3 - 6	2 - 11
	2-2x8	8 - 4	6 - 4	5 - 3	7 - 7	5 - 9	4 - 10	6 - 5	5 - 0	4 - 2	5 - 9	4 - 5	3 - 9
	2-2x10	9 - 11	7 - 6	6 - 3	9 - 0	6 - 10	5 - 9	7 - 8	5 - 11	4 - 11	6 - 9	5 - 3	4 - 5
	2-2x12	11 - 8	8 - 10	7 - 4	10 - 7	8 - 1	6 - 10	9 - 0	6 - 11	5 - 10	8 - 0	6 - 2	5 - 2
	3-2x8	10 - 5	7 - 11	6 - 7	9 - 5	7 - 3	6 - 1	8 - 1	6 - 3	5 - 3	7 - 2	5 - 6	4 - 8
	3-2x10	12 - 5	9 - 4	7 - 10	11 - 3	8 - 7	7 - 3	9 - 7	7 - 4	6 - 2	8 - 6	6 - 7	5 - 6
	3-2x12	14 - 7	11 - 0	9 - 3	13 - 2	10 - 1	8 - 6	11 - 3	8 - 8	7 - 4	10 - 0	7 - 9	6 - 6
	4-2x8	12 - 1	9 - 1	7 - 8	10 - 11	8 - 4	7 - 0	9 - 4	7 - 2	6 - 0	8 - 3	6 - 4	5 - 4
	4-2x10	14 - 4	10 - 10	9 - 1	12 - 11	9 - 11	8 - 4	11 - 1	8 - 6	7 - 2	9 - 10	7 - 7	6 - 4
	4-2x12	16 - 10	12 - 9	10 - 8	15 - 3	11 - 8	9 - 10	13 - 0	10 - 0	8 - 5	11 - 7	8 - 11	7 - 6
	Size	Maximum Header/Girder Spans (ft-in.) for Glued Laminated Timber Beams[2,3,4]											
	3.125x5.500	8 - 5	6 - 10	5 - 9	8 - 1	6 - 3	5 - 3	7 - 0	5 - 5	4 - 6	6 - 2	4 - 9	4 - 0
	3.125x6.875	10 - 7	8 - 7	7 - 2	10 - 2	7 - 10	6 - 7	8 - 9	6 - 9	5 - 8	7 - 9	6 - 0	5 - 0
	3.125x8.250	12 - 8	10 - 3	8 - 7	12 - 2	9 - 5	7 - 11	10 - 6	8 - 1	6 - 10	9 - 4	7 - 2	6 - 1
	3.125x9.625	14 - 9	12 - 0	10 - 0	14 - 2	11 - 0	9 - 3	12 - 3	9 - 5	7 - 11	10 - 10	8 - 4	7 - 1
	3.125x11.000	16 - 11	13 - 8	11 - 6	16 - 3	12 - 7	10 - 7	14 - 0	10 - 9	9 - 1	12 - 5	9 - 7	8 - 1
	3.125x12.375	19 - 0	15 - 5	12 - 11	18 - 3	14 - 1	11 - 11	15 - 9	12 - 1	10 - 2	14 - 0	10 - 9	9 - 1
	3.125x13.750	20-0†	17 - 1	14 - 4	20-0†	15 - 8	13 - 2	17 - 6	13 - 5	11 - 4	15 - 6	12 - 0	10 - 1
	3.125x15.125	20-0†	18 - 10	15 - 9	20-0†	17 - 3	14 - 6	19 - 3	14 - 10	12 - 5	17 - 1	13 - 2	11 - 1
	3.125x16.500	20-0†	20-0†	17 - 2	20-0†	18 - 10	15 - 10	20-0†	16 - 2	13 - 7	18 - 7	14 - 4	12 - 1
	3.125x17.875	20-0†	20-0†	18 - 7	20-0†	20-0†	17 - 2	20-0†	17 - 6	14 - 9	20-0†	15 - 7	13 - 1
	3.125x19.250	20-0†	20-0†	20-0†	20-0†	20-0†	18 - 6	20-0†	18 - 10	15 - 10	20-0†	16 - 9	14 - 1
	3.125x20.625	20-0†	20-0†	20-0†	20-0†	20-0†	19 - 10	20-0†	20-0†	17 - 0	20-0†	17 - 11	15 - 1
	3.125x22.000	20-0†	20-0†	20-0†	20-0†	20-0†	20-0†	20-0†	20-0†	18 - 1	20-0†	19 - 1	16 - 1
	3.125x23.375	20-0†	20-0†	20-0†	20-0†	20-0†	20-0†	20-0†	20-0†	19 - 2	20-0†	20-0†	17 - 1
	3.125x24.750	20-0†	20-0†	20-0†	20-0†	20-0†	20-0†	20-0†	20-0†	20-0†	20-0†	20-0†	18 - 1
	5.125x5.500	10 - 0	8 - 3	7 - 4	9 - 7	8 - 0	6 - 9	8 - 7	6 - 11	5 - 10	7 - 11	6 - 2	5 - 2
	5.125x6.875	12 - 5	10 - 4	9 - 2	12 - 0	10 - 0	8 - 5	10 - 9	8 - 7	7 - 3	9 - 11	7 - 8	6 - 5
	5.125x8.250	14 - 11	12 - 5	11 - 0	14 - 4	12 - 0	10 - 2	12 - 11	10 - 4	8 - 8	11 - 11	9 - 2	7 - 9
	5.125x9.625	17 - 5	14 - 5	12 - 10	16 - 9	14 - 0	11 - 10	15 - 1	12 - 1	10 - 2	13 - 11	10 - 9	9 - 0
	5.125x11.000	19 - 11	16 - 6	14 - 8	19 - 2	16 - 0	13 - 6	17 - 3	13 - 9	11 - 7	15 - 11	12 - 3	10 - 4
	5.125x12.375	20-0†	18 - 7	16 - 6	20-0†	18 - 0	15 - 3	19 - 5	15 - 6	13 - 1	17 - 11	13 - 9	11 - 7
	5.125x13.750	20-0†	20-0†	18 - 4	20-0†	20-0†	16 - 11	20-0†	17 - 3	14 - 6	19 - 10	15 - 4	12 - 11
	5.125x15.125	20-0†	20-0†	20 - 0	20-0†	20-0†	18 - 6	20-0†	18 - 10	15 - 11	20-0†	16 - 10	14 - 2
	5.125x16.500	20-0†	20-0†	20-0†	20-0†	20-0†	20-0†	20-0†	20-0†	17 - 3	20-0†	18 - 3	15 - 6
	5.125x17.875	20-0†	20-0†	20-0†	20-0†	20-0†	20-0†	20-0†	20-0†	18 - 7	20-0†	19 - 7	16 - 8
	5.125x19.250	20-0†	20-0†	20-0†	20-0†	20-0†	20-0†	20-0†	20-0†	19 - 11	20-0†	20-0†	17 - 9
	5.125x20.625	20-0†	20-0†	20-0†	20-0†	20-0†	20-0†	20-0†	20-0†	20-0†	20-0†	20-0†	18 - 11
	5.125x22.000	20-0†	20-0†	20-0†	20-0†	20-0†	20-0†	20-0†	20-0†	20-0†	20-0†	20-0†	20-0†
	5.125x23.375	20-0†	20-0†	20-0†	20-0†	20-0†	20-0†	20-0†	20-0†	20-0†	20-0†	20-0†	20-0†
	5.125x24.750	20-0†	20-0†	20-0†	20-0†	20-0†	20-0†	20-0†	20-0†	20-0†	20-0†	20-0†	20-0†

† Spans are limited to 20 feet in length.

1 Tabulated spans are based on the lowest F_b, F_v, and E for #2 Grade Douglas Fir-Larch, Hem-Fir, Southern Pine, and Spruce-Pine-Fir. For #3 Grade lumber, spans shall be multiplied by 0.75.

2 Tabulated spans assume 20F combination glulam with a minimum F_{bx}=2,000psi, F_{vx}=210psi, and E=1,500,000psi.

3 The number of jack studs required at each end of the header shall be determined from Table 3.22F.

4 Spans checked for live load deflection only.

Copyright © American Wood Council. Downloaded/printed pursuant to License Agreement. No reproduction or transfer authorized.

Table 3.22B1 Laterally Unsupported (Dropped) Header Spans for Exterior Loadbearing Walls

Dropped Exterior

(Supporting a Roof, Ceiling, and One Center Bearing Floor) Dead Load Assumptions:

Roof/Ceiling Assembly = 20 psf, Floor Assembly = 10psf, Wall Assembly = 121plf, L/Δ_{LL}=360

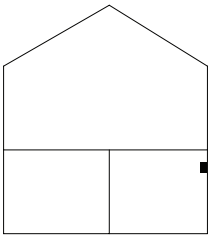

Headers Supporting	Size	Roof Live Load 20 psf			Ground Snow Load 30 psf			50 psf			70 psf		
		Building Width (ft)											
		12	24	36	12	24	36	12	24	36	12	24	36
		Maximum Header/Girder Spans (ft-in.) for Common Lumber Species[1,3,4]											
Roof, Ceiling, and One Center Bearing Floor	1-2x6	3 - 5	2 - 8	2 - 3	3 - 2	2 - 6	2 - 2	2 - 11	2 - 4	2 - 0	2 - 8	2 - 2	1 - 10
	1-2x8	4 - 3	3 - 4	2 - 10	4 - 0	3 - 2	2 - 8	3 - 8	2 - 11	2 - 6	3 - 5	2 - 8	2 - 4
	1-2x10	4 - 10	3 - 11	3 - 4	4 - 8	3 - 9	3 - 2	4 - 4	3 - 5	2 - 11	4 - 0	3 - 2	2 - 9
	1-2x12	5 - 5	4 - 5	3 - 10	5 - 3	4 - 3	3 - 8	4 - 10	3 - 11	3 - 5	4 - 6	3 - 8	3 - 2
	2-2x4	3 - 4	2 - 8	2 - 3	3 - 2	2 - 6	2 - 2	2 - 11	2 - 4	2 - 0	2 - 8	2 - 2	1 - 10
	2-2x6	4 - 11	3 - 11	3 - 4	4 - 8	3 - 8	3 - 2	4 - 4	3 - 5	2 - 11	4 - 0	3 - 2	2 - 8
	2-2x8	5 - 11	4 - 10	4 - 2	5 - 8	4 - 7	3 - 11	5 - 3	4 - 3	3 - 8	4 - 10	3 - 11	3 - 5
	2-2x10	6 - 7	5 - 5	4 - 9	6 - 4	5 - 3	4 - 7	5 - 11	4 - 10	4 - 3	5 - 6	4 - 6	3 - 11
	2-2x12	7 - 1	5 - 11	5 - 3	6 - 10	5 - 9	5 - 1	6 - 5	5 - 5	4 - 9	6 - 1	5 - 1	4 - 6
	3-2x8	7 - 0	5 - 9	5 - 0	6 - 9	5 - 7	4 - 10	6 - 4	5 - 2	4 - 5	5 - 11	4 - 10	4 - 2
	3-2x10	7 - 8	6 - 4	5 - 7	7 - 5	6 - 2	5 - 5	7 - 0	5 - 9	5 - 1	6 - 6	5 - 5	4 - 9
	3-2x12	8 - 2	6 - 10	6 - 1	8 - 0	6 - 8	6 - 0	7 - 6	6 - 3	5 - 7	7 - 0	5 - 11	5 - 3
	4-2x8	7 - 10	6 - 6	5 - 8	7 - 7	6 - 3	5 - 6	7 - 1	5 - 10	5 - 1	6 - 7	5 - 5	4 - 9
	4-2x10	8 - 6	7 - 1	6 - 3	8 - 4	6 - 11	6 - 1	7 - 10	6 - 6	5 - 8	7 - 4	6 - 1	5 - 4
	4-2x12	9 - 1	7 - 7	6 - 9	8 - 11	7 - 5	6 - 7	8 - 4	7 - 0	6 - 2	7 - 10	6 - 7	5 - 10
	Size	Maximum Header/Girder Spans (ft-in.) for Glued Laminated Timber Beams[2,3,4]											
	3.125x5.500	6 - 11	5 - 5	4 - 8	6 - 7	5 - 2	4 - 5	6 - 1	4 - 9	4 - 1	5 - 7	4 - 5	3 - 9
	3.125x6.875	8 - 8	6 - 10	5 - 9	8 - 2	6 - 5	5 - 6	7 - 6	5 - 11	5 - 1	6 - 11	5 - 6	4 - 8
	3.125x8.250	10 - 4	8 - 1	6 - 11	9 - 9	7 - 8	6 - 7	9 - 0	7 - 1	6 - 0	8 - 3	6 - 7	5 - 7
	3.125x9.625	11 - 11	9 - 5	8 - 0	11 - 3	8 - 11	7 - 7	10 - 4	8 - 2	7 - 0	9 - 6	7 - 7	6 - 6
	3.125x11.000	13 - 2	10 - 7	9 - 1	12 - 7	10 - 1	8 - 7	11 - 8	9 - 3	7 - 11	10 - 9	8 - 7	7 - 5
	3.125x12.375	14 - 2	11 - 7	10 - 0	13 - 8	11 - 1	9 - 7	12 - 9	10 - 3	8 - 10	11 - 9	9 - 6	8 - 2
	3.125x13.750	15 - 0	12 - 4	10 - 9	14 - 6	11 - 11	10 - 4	13 - 7	11 - 1	9 - 7	12 - 7	10 - 4	9 - 0
	3.125x15.125	15 - 7	12 - 11	11 - 5	15 - 2	12 - 7	11 - 0	14 - 3	11 - 9	10 - 3	13 - 3	11 - 0	9 - 7
	3.125x16.500	16 - 1	13 - 5	11 - 10	15 - 8	13 - 1	11 - 7	14 - 9	12 - 3	10 - 9	13 - 10	11 - 6	10 - 2
	3.125x17.875	16 - 7	13 - 10	12 - 3	16 - 2	13 - 7	12 - 0	15 - 3	12 - 8	11 - 3	14 - 3	12 - 0	10 - 7
	3.125x19.250	17 - 0	14 - 3	12 - 7	16 - 7	13 - 11	12 - 4	15 - 7	13 - 1	11 - 7	14 - 8	12 - 4	10 - 11
	3.125x20.625	17 - 4	14 - 7	12 - 11	17 - 0	14 - 3	12 - 8	16 - 0	13 - 5	11 - 11	15 - 0	12 - 8	11 - 3
	3.125x22.000	17 - 9	14 - 10	13 - 2	17 - 4	14 - 7	13 - 0	16 - 4	13 - 8	12 - 2	15 - 4	12 - 11	11 - 7
	3.125x23.375	18 - 1	15 - 2	13 - 6	17 - 8	14 - 11	13 - 3	16 - 8	14 - 0	12 - 6	15 - 8	13 - 3	11 - 10
	3.125x24.750	18 - 5	15 - 5	13 - 9	18 - 0	15 - 2	13 - 6	17 - 0	14 - 3	12 - 9	15 - 11	13 - 6	12 - 1
	5.125x5.500	8 - 6	7 - 0	5 - 11	8 - 4	6 - 8	5 - 8	7 - 9	6 - 1	5 - 2	7 - 0	5 - 8	4 - 10
	5.125x6.875	10 - 7	8 - 9	7 - 5	10 - 5	8 - 4	7 - 1	9 - 8	7 - 8	6 - 6	8 - 9	7 - 1	6 - 0
	5.125x8.250	12 - 8	10 - 6	8 - 11	12 - 6	10 - 0	8 - 6	11 - 7	9 - 2	7 - 9	10 - 5	8 - 5	7 - 3
	5.125x9.625	14 - 10	12 - 2	10 - 4	14 - 6	11 - 7	9 - 10	13 - 6	10 - 8	9 - 1	12 - 2	9 - 10	8 - 5
	5.125x11.000	16 - 11	13 - 11	11 - 10	16 - 7	13 - 2	11 - 3	15 - 5	12 - 2	10 - 4	13 - 11	11 - 3	9 - 7
	5.125x12.375	19 - 1	15 - 7	13 - 3	18 - 8	14 - 10	12 - 7	17 - 3	13 - 7	11 - 7	15 - 8	12 - 7	10 - 9
	5.125x13.750	20-0†	17 - 3	14 - 8	20-0†	16 - 4	14 - 0	19 - 0	15 - 1	12 - 10	17 - 5	13 - 11	11 - 11
	5.125x15.125	20-0†	18 - 10	16 - 1	20-0†	17 - 10	15 - 3	20-0†	16 - 5	14 - 0	19 - 0	15 - 3	13 - 1
	5.125x16.500	20-0†	20-0†	17 - 5	20-0†	19 - 3	16 - 6	20-0†	17 - 9	15 - 3	20-0†	16 - 6	14 - 2
	5.125x17.875	20-0†	20-0†	18 - 8	20-0†	20-0†	17 - 9	20-0†	19 - 0	16 - 4	20-0†	17 - 8	15 - 3
	5.125x19.250	20-0†	20-0†	19 - 8	20-0†	20-0†	18 - 10	20-0†	20-0†	17 - 5	20-0†	18 - 10	16 - 3
	5.125x20.625	20-0†	20-0†	20-0†	20-0†	20-0†	19 - 10	20-0†	20-0†	18 - 4	20-0†	19 - 9	17 - 2
	5.125x22.000	20-0†	20-0†	20-0†	20-0†	20-0†	20-0†	20-0†	20-0†	19 - 3	20-0†	20-0†	18 - 0
	5.125x23.375	20-0†	20-0†	20-0†	20-0†	20-0†	20-0†	20-0†	20-0†	20 - 0	20-0†	20-0†	18 - 9
	5.125x24.750	20-0†	20-0†	20-0†	20-0†	20-0†	20-0†	20-0†	20-0†	20-0†	20-0†	20-0†	19 - 5

† Spans are limited to 20 feet in length.

1 Tabulated spans are based on the lowest F_b, F_v, and E for #2 Grade Douglas Fir-Larch, Hem-Fir, Southern Pine, and Spruce-Pine-Fir. For #3 Grade lumber, spans shall be multiplied by 0.75.

2 Tabulated spans assume 20F combination glulam with a minimum F_{bx}=2,000psi, F_{vx}=210psi, and E=1,500,000psi.

3 The number of jack studs required at each end of the header shall be determined from Table 3.22F.

4 Spans checked for live load deflection only.

Copyright © American Wood Council. Downloaded/printed pursuant to License Agreement. No reproduction or transfer authorized.

Table 3.22B2 Laterally Supported (Raised) Header Spans for Exterior Loadbearing Walls

Raised Exterior

(Supporting a Roof, Ceiling, and One Center Bearing Floor) Dead Load Assumptions:

Roof/Ceiling Assembly = 20 psf, Floor Assembly = 10psf, Wall Assembly = 121plf, L/Δ_{LL}=360

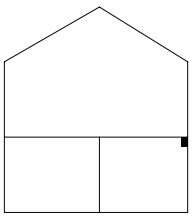

		Roof Live Load			Ground Snow Load								
		20 psf			30 psf			50 psf			70 psf		
		Building Width (ft)											
		12	24	36	12	24	36	12	24	36	12	24	36
Headers Supporting	Size	Maximum Header/Girder Spans (ft-in.) for Common Lumber Species[1,3,4]											
Roof, Ceiling, and One Center Bearing Floor	1-2x6	3 - 5	2 - 8	2 - 3	3 - 3	2 - 7	2 - 2	3 - 0	2 - 4	2 - 0	2 - 9	2 - 2	1 - 10
	1-2x8	4 - 4	3 - 5	2 - 11	4 - 1	3 - 3	2 - 9	3 - 9	3 - 0	2 - 6	3 - 6	2 - 9	2 - 4
	1-2x10	5 - 2	4 - 0	3 - 5	4 - 11	3 - 10	3 - 3	4 - 6	3 - 6	3 - 0	4 - 1	3 - 3	2 - 9
	1-2x12	6 - 1	4 - 9	4 - 0	5 - 9	4 - 6	3 - 10	5 - 3	4 - 2	3 - 6	4 - 10	3 - 10	3 - 3
	2-2x4	3 - 5	2 - 8	2 - 3	3 - 3	2 - 6	2 - 2	3 - 0	2 - 4	2 - 0	2 - 8	2 - 2	1 - 10
	2-2x6	5 - 1	4 - 0	3 - 5	4 - 10	3 - 9	3 - 3	4 - 5	3 - 6	3 - 0	4 - 1	3 - 3	2 - 9
	2-2x8	6 - 5	5 - 1	4 - 3	6 - 1	4 - 10	4 - 1	5 - 7	4 - 5	3 - 9	5 - 2	4 - 1	3 - 6
	2-2x10	7 - 8	6 - 0	5 - 1	7 - 3	5 - 8	4 - 10	6 - 8	5 - 3	4 - 5	6 - 1	4 - 10	4 - 1
	2-2x12	9 - 0	7 - 1	6 - 0	8 - 6	6 - 8	5 - 8	7 - 10	6 - 2	5 - 3	7 - 2	5 - 8	4 - 10
	3-2x8	8 - 1	6 - 4	5 - 4	7 - 8	6 - 0	5 - 1	7 - 0	5 - 6	4 - 8	6 - 5	5 - 1	4 - 4
	3-2x10	9 - 7	7 - 6	6 - 4	9 - 1	7 - 2	6 - 1	8 - 4	6 - 7	5 - 7	7 - 8	6 - 1	5 - 2
	3-2x12	11 - 3	8 - 10	7 - 6	10 - 8	8 - 5	7 - 2	9 - 10	7 - 8	6 - 7	9 - 0	7 - 1	6 - 1
	4-2x8	9 - 4	7 - 4	6 - 2	8 - 10	6 - 11	5 - 11	8 - 1	6 - 4	5 - 5	7 - 5	5 - 11	5 - 0
	4-2x10	11 - 0	8 - 8	7 - 4	10 - 6	8 - 3	7 - 0	9 - 8	7 - 7	6 - 5	8 - 10	7 - 0	6 - 0
	4-2x12	13 - 0	10 - 2	8 - 8	12 - 4	9 - 8	8 - 3	11 - 4	8 - 11	7 - 7	10 - 4	8 - 3	7 - 0
	Size	Maximum Header/Girder Spans (ft-in.) for Glued Laminated Timber Beams[2,3,4]											
	3.125x5.500	7 - 0	5 - 6	4 - 8	6 - 7	5 - 3	4 - 5	6 - 1	4 - 9	4 - 1	5 - 7	4 - 5	3 - 9
	3.125x6.875	8 - 9	6 - 10	5 - 10	8 - 3	6 - 6	5 - 6	7 - 7	6 - 0	5 - 1	7 - 0	5 - 6	4 - 9
	3.125x8.250	10 - 6	8 - 3	7 - 0	9 - 11	7 - 10	6 - 8	9 - 2	7 - 2	6 - 1	8 - 4	6 - 8	5 - 8
	3.125x9.625	12 - 3	9 - 7	8 - 2	11 - 7	9 - 1	7 - 9	10 - 8	8 - 4	7 - 1	9 - 9	7 - 9	6 - 7
	3.125x11.000	14 - 0	10 - 11	9 - 4	13 - 3	10 - 5	8 - 10	12 - 2	9 - 7	8 - 1	11 - 2	8 - 10	7 - 6
	3.125x12.375	15 - 8	12 - 4	10 - 6	14 - 11	11 - 9	10 - 0	13 - 8	10 - 9	9 - 2	12 - 6	9 - 11	8 - 6
	3.125x13.750	17 - 5	13 - 8	11 - 8	16 - 7	13 - 0	11 - 1	15 - 3	12 - 0	10 - 2	13 - 11	11 - 1	9 - 5
	3.125x15.125	19 - 2	15 - 1	12 - 9	18 - 3	14 - 4	12 - 2	16 - 9	13 - 2	11 - 2	15 - 4	12 - 2	10 - 4
	3.125x16.500	20-0†	16 - 5	14 - 0	19 - 10	15 - 8	13 - 3	18 - 3	14 - 4	12 - 2	16 - 9	13 - 3	11 - 4
	3.125x17.875	20-0†	17 - 9	15 - 1	20-0†	16 - 11	14 - 5	19 - 10	15 - 6	13 - 2	18 - 1	14 - 4	12 - 3
	3.125x19.250	20-0†	19 - 2	16 - 3	20-0†	18 - 3	15 - 6	20-0†	16 - 9	14 - 3	19 - 6	15 - 6	13 - 2
	3.125x20.625	20-0†	20-0†	17 - 5	20-0†	19 - 6	16 - 7	20-0†	17 - 11	15 - 3	20-0†	16 - 7	14 - 2
	3.125x22.000	20-0†	20-0†	18 - 7	20-0†	20-0†	17 - 9	20-0†	19 - 1	16 - 3	20-0†	17 - 8	15 - 1
	3.125x23.375	20-0†	20-0†	19 - 8	20-0†	20-0†	18 - 9	20-0†	20-0†	17 - 3	20-0†	18 - 9	16 - 0
	3.125x24.750	20-0†	20-0†	20-0†	20-0†	20-0†	19 - 9	20-0†	20-0†	18 - 2	20-0†	19 - 9	17 - 0
	5.125x5.500	8 - 6	7 - 0	6 - 0	8 - 4	6 - 8	5 - 8	7 - 9	6 - 1	5 - 2	7 - 0	5 - 8	4 - 10
	5.125x6.875	10 - 7	8 - 9	7 - 5	10 - 5	8 - 4	7 - 1	9 - 8	7 - 8	6 - 6	8 - 9	7 - 1	6 - 0
	5.125x8.250	12 - 8	10 - 6	8 - 11	12 - 6	10 - 0	8 - 6	11 - 7	9 - 2	7 - 10	10 - 5	8 - 6	7 - 3
	5.125x9.625	14 - 10	12 - 3	10 - 5	14 - 6	11 - 8	9 - 11	13 - 7	10 - 9	9 - 1	12 - 2	9 - 11	8 - 5
	5.125x11.000	16 - 11	14 - 0	11 - 11	16 - 7	13 - 4	11 - 4	15 - 6	12 - 3	10 - 5	13 - 11	11 - 4	9 - 8
	5.125x12.375	19 - 1	15 - 9	13 - 5	18 - 8	15 - 0	12 - 9	17 - 5	13 - 9	11 - 8	15 - 8	12 - 9	10 - 10
	5.125x13.750	20-0†	17 - 6	14 - 11	20-0†	16 - 8	14 - 2	19 - 4	15 - 4	13 - 0	17 - 5	14 - 2	12 - 1
	5.125x15.125	20-0†	19 - 2	16 - 5	20-0†	18 - 3	15 - 7	20-0†	16 - 10	14 - 4	19 - 2	15 - 7	13 - 3
	5.125x16.500	20-0†	20-0†	17 - 9	20-0†	19 - 9	16 - 11	20-0†	18 - 3	15 - 7	20-0†	16 - 11	14 - 6
	5.125x17.875	20-0†	20-0†	19 - 1	20-0†	20-0†	18 - 2	20-0†	19 - 7	16 - 9	20-0†	18 - 2	15 - 7
	5.125x19.250	20-0†	20-0†	20-0†	20-0†	20-0†	19 - 6	20-0†	20-0†	17 - 11	20-0†	19 - 5	16 - 8
	5.125x20.625	20-0†	20-0†	20-0†	20-0†	20-0†	20-0†	20-0†	20-0†	19 - 1	20-0†	20-0†	17 - 9
	5.125x22.000	20-0†	20-0†	20-0†	20-0†	20-0†	20-0†	20-0†	20-0†	20-0†	20-0†	20-0†	18 - 10
	5.125x23.375	20-0†	20-0†	20-0†	20-0†	20-0†	20-0†	20-0†	20-0†	20-0†	20-0†	20-0†	19 - 11
	5.125x24.750	20-0†	20-0†	20-0†	20-0†	20-0†	20-0†	20-0†	20-0†	20-0†	20-0†	20-0†	20-0†

† Spans are limited to 20 feet in length.

1 Tabulated spans are based on the lowest F_b, F_v, and E for #2 Grade Douglas Fir-Larch, Hem-Fir, Southern Pine, and Spruce-Pine-Fir. For #3 Grade lumber, spans shall be multiplied by 0.75.

2 Tabulated spans assume 20F combination glulam with a minimum F_{bx}=2,000psi, F_{vx}=210psi, and E=1,500,000psi.

3 The number of jack studs required at each end of the header shall be determined from Table 3.22F.

4 Spans checked for live load deflection only.

Copyright © American Wood Council. Downloaded/printed pursuant to License Agreement. No reproduction or transfer authorized.

Table 3.22C1 Laterally Unsupported (Dropped) Header Spans for Exterior Loadbearing Walls

Dropped Exterior

(Supporting a Roof, Ceiling, and One Clear Span Floor) Dead Load Assumptions:

Roof/Ceiling Assembly = 20 psf, Floor Assembly = 10psf, Wall Assembly = 121plf, L/Δ_{LL}=360

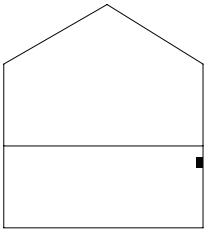

Headers Supporting	Size	Roof Live Load 20 psf			Ground Snow Load 30 psf			50 psf			70 psf		
		Building Width (ft)											
		12	24	36	12	24	36	12	24	36	12	24	36
		Maximum Header/Girder Spans (ft-in.) for Common Lumber Species[1,3,4]											
Roof, Ceiling, and One Clear Span Floor	1-2x6	2 - 11	2 - 3	1 - 10	2 - 11	2 - 3	1 - 10	2 - 9	2 - 1	1 - 9	2 - 7	2 - 0	1 - 8
	1-2x8	3 - 8	2 - 10	2 - 4	3 - 8	2 - 10	2 - 4	3 - 5	2 - 8	2 - 3	3 - 2	2 - 6	2 - 1
	1-2x10	4 - 3	3 - 4	2 - 9	4 - 3	3 - 4	2 - 9	4 - 0	3 - 1	2 - 8	3 - 9	2 - 11	2 - 6
	1-2x12	4 - 11	3 - 10	3 - 3	4 - 10	3 - 10	3 - 3	4 - 6	3 - 7	3 - 1	4 - 4	3 - 5	2 - 11
	2-2x4	2 - 11	2 - 3	1 - 10	2 - 11	2 - 3	1 - 10	2 - 8	2 - 1	1 - 9	2 - 6	2 - 0	1 - 8
	2-2x6	4 - 3	3 - 3	2 - 9	4 - 3	3 - 3	2 - 9	4 - 0	3 - 1	2 - 7	3 - 9	2 - 11	2 - 6
	2-2x8	5 - 3	4 - 1	3 - 6	5 - 2	4 - 1	3 - 6	4 - 11	3 - 10	3 - 3	4 - 7	3 - 8	3 - 1
	2-2x10	6 - 0	4 - 9	4 - 1	5 - 10	4 - 9	4 - 1	5 - 6	4 - 5	3 - 10	5 - 3	4 - 3	3 - 7
	2-2x12	6 - 6	5 - 4	4 - 8	6 - 5	5 - 3	4 - 7	6 - 1	5 - 0	4 - 4	5 - 10	4 - 9	4 - 1
	3-2x8	6 - 5	5 - 0	4 - 3	6 - 3	5 - 0	4 - 3	5 - 11	4 - 8	4 - 0	5 - 7	4 - 5	3 - 10
	3-2x10	7 - 1	5 - 9	4 - 11	6 - 11	5 - 8	4 - 11	6 - 7	5 - 4	4 - 8	6 - 3	5 - 1	4 - 5
	3-2x12	7 - 7	6 - 3	5 - 6	7 - 5	6 - 2	5 - 5	7 - 1	5 - 10	5 - 2	6 - 9	5 - 7	4 - 11
	4-2x8	7 - 3	5 - 9	4 - 11	7 - 0	5 - 8	4 - 11	6 - 8	5 - 4	4 - 7	6 - 4	5 - 1	4 - 4
	4-2x10	7 - 11	6 - 6	5 - 7	7 - 9	6 - 4	5 - 6	7 - 4	6 - 0	5 - 3	7 - 0	5 - 8	5 - 0
	4-2x12	8 - 5	6 - 11	6 - 2	8 - 3	6 - 10	6 - 0	7 - 10	6 - 6	5 - 9	7 - 6	6 - 2	5 - 6
	Size	Maximum Header/Girder Spans (ft-in.) for Glued Laminated Timber Beams[2,3,4]											
	3.125x5.500	6 - 0	4 - 7	3 - 10	6 - 0	4 - 7	3 - 10	5 - 7	4 - 4	3 - 8	5 - 3	4 - 1	3 - 5
	3.125x6.875	7 - 5	5 - 8	4 - 9	7 - 5	5 - 8	4 - 9	6 - 11	5 - 4	4 - 6	6 - 6	5 - 1	4 - 3
	3.125x8.250	8 - 11	6 - 10	5 - 9	8 - 10	6 - 10	5 - 9	8 - 3	6 - 5	5 - 5	7 - 10	6 - 0	5 - 1
	3.125x9.625	10 - 4	7 - 11	6 - 8	10 - 3	7 - 11	6 - 8	9 - 7	7 - 5	6 - 3	9 - 0	7 - 0	5 - 11
	3.125x11.000	11 - 7	9 - 0	7 - 7	11 - 6	9 - 0	7 - 7	10 - 9	8 - 5	7 - 2	10 - 2	7 - 11	6 - 9
	3.125x12.375	12 - 10	10 - 0	8 - 5	12 - 7	9 - 11	8 - 5	11 - 10	9 - 4	7 - 11	11 - 2	8 - 10	7 - 6
	3.125x13.750	13 - 10	10 - 10	9 - 3	13 - 5	10 - 9	9 - 3	12 - 8	10 - 2	8 - 8	12 - 0	9 - 7	8 - 2
	3.125x15.125	14 - 5	11 - 8	10 - 0	14 - 1	11 - 5	9 - 11	13 - 4	10 - 10	9 - 4	12 - 8	10 - 3	8 - 10
	3.125x16.500	14 - 11	12 - 3	10 - 7	14 - 7	12 - 0	10 - 5	13 - 10	11 - 4	9 - 10	13 - 3	10 - 9	9 - 5
	3.125x17.875	15 - 4	12 - 8	11 - 1	15 - 1	12 - 5	10 - 10	14 - 4	11 - 9	10 - 3	13 - 8	11 - 3	9 - 10
	3.125x19.250	15 - 9	13 - 0	11 - 5	15 - 5	12 - 9	11 - 2	14 - 8	12 - 1	10 - 8	14 - 1	11 - 7	10 - 2
	3.125x20.625	16 - 1	13 - 4	11 - 9	15 - 10	13 - 1	11 - 6	15 - 1	12 - 5	11 - 0	14 - 5	11 - 11	10 - 6
	3.125x22.000	16 - 6	13 - 7	12 - 0	16 - 2	13 - 4	11 - 10	15 - 5	12 - 9	11 - 3	14 - 9	12 - 2	10 - 10
	3.125x23.375	16 - 9	13 - 10	12 - 4	16 - 6	13 - 8	12 - 2	15 - 8	13 - 0	11 - 7	15 - 0	12 - 6	11 - 1
	3.125x24.750	17 - 1	14 - 1	12 - 7	16 - 9	13 - 11	12 - 5	16 - 0	13 - 3	11 - 10	15 - 3	12 - 9	11 - 4
	5.125x5.500	7 - 8	5 - 10	4 - 11	7 - 8	5 - 10	4 - 11	7 - 2	5 - 6	4 - 8	6 - 8	5 - 2	4 - 5
	5.125x6.875	9 - 7	7 - 4	6 - 2	9 - 7	7 - 4	6 - 2	8 - 11	6 - 11	5 - 10	8 - 4	6 - 6	5 - 6
	5.125x8.250	11 - 6	8 - 9	7 - 4	11 - 5	8 - 9	7 - 4	10 - 8	8 - 3	7 - 0	10 - 0	7 - 9	6 - 7
	5.125x9.625	13 - 5	10 - 3	8 - 7	13 - 4	10 - 3	8 - 7	12 - 5	9 - 7	8 - 1	11 - 8	9 - 1	7 - 8
	5.125x11.000	15 - 3	11 - 8	9 - 9	15 - 2	11 - 8	9 - 9	14 - 2	11 - 0	9 - 3	13 - 4	10 - 4	8 - 9
	5.125x12.375	17 - 1	13 - 1	11 - 0	17 - 0	13 - 1	11 - 0	15 - 10	12 - 4	10 - 5	15 - 0	11 - 7	9 - 9
	5.125x13.750	18 - 10	14 - 6	12 - 2	18 - 9	14 - 6	12 - 2	17 - 6	13 - 7	11 - 6	16 - 6	12 - 10	10 - 10
	5.125x15.125	20-0†	15 - 10	13 - 4	20-0†	15 - 10	13 - 4	19 - 1	14 - 11	12 - 7	18 - 0	14 - 1	11 - 11
	5.125x16.500	20-0†	17 - 2	14 - 6	20-0†	17 - 2	14 - 6	20-0†	16 - 2	13 - 8	19 - 6	15 - 3	12 - 11
	5.125x17.875	20-0†	18 - 6	15 - 7	20-0†	18 - 5	15 - 7	20-0†	17 - 4	14 - 9	20-0†	16 - 4	13 - 11
	5.125x19.250	20-0†	19 - 8	16 - 8	20-0†	19 - 7	16 - 8	20-0†	18 - 5	15 - 9	20-0†	17 - 5	14 - 10
	5.125x20.625	20-0†	20-0†	17 - 9	20-0†	20-0†	17 - 8	20-0†	19 - 4	16 - 8	20-0†	18 - 4	15 - 9
	5.125x22.000	20-0†	20-0†	18 - 8	20-0†	20-0†	18 - 6	20-0†	20-0†	17 - 6	20-0†	19 - 3	16 - 7
	5.125x23.375	20-0†	20-0†	19 - 6	20-0†	20-0†	19 - 3	20-0†	20-0†	18 - 2	20-0†	20 - 0	17 - 3
	5.125x24.750	20-0†	20-0†	20-0†	20-0†	20-0†	19 - 11	20-0†	20-0†	18 - 10	20-0†	20-0†	17 - 11

† Spans are limited to 20 feet in length.

1 Tabulated spans are based on the lowest F_b, F_v, and E for #2 Grade Douglas Fir-Larch, Hem-Fir, Southern Pine, and Spruce-Pine-Fir. For #3 Grade lumber, spans shall be multiplied by 0.75.

2 Tabulated spans assume 20F combination glulam with a minimum F_{bx}=2,000psi, F_{vx}=210psi, and E=1,500,000psi.

3 The number of jack studs required at each end of the header shall be determined from Table 3.22F.

4 Spans checked for live load deflection only.

Copyright © American Wood Council. Downloaded/printed pursuant to License Agreement. No reproduction or transfer authorized.

Table 3.22C2 Laterally Supported (Raised) Header Spans for Exterior Loadbearing Walls

Raised Exterior

(Supporting a Roof, Ceiling, and One Clear Span Floor) Dead Load Assumptions:

Roof/Ceiling Assembly = 20 psf, Floor Assembly = 10psf, Wall Assembly = 121plf, L/Δ_{LL}=360

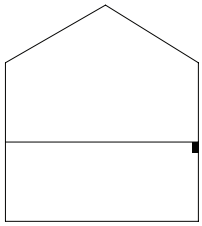

Headers Supporting	Size	Roof Live Load 20 psf			Ground Snow Load 30 psf			Ground Snow Load 50 psf			Ground Snow Load 70 psf		
		Building Width (ft)											
		12	24	36	12	24	36	12	24	36	12	24	36
		Maximum Header/Girder Spans (ft-in.) for Common Lumber Species[1,3,4]											
Roof, Ceiling, and One Clear Span Floor	1-2x6	2 - 11	2 - 3	1 - 11	2 - 11	2 - 3	1 - 11	2 - 9	2 - 1	1 - 9	2 - 7	2 - 0	1 - 8
	1-2x8	3 - 9	2 - 10	2 - 5	3 - 9	2 - 10	2 - 5	3 - 6	2 - 8	2 - 3	3 - 3	2 - 6	2 - 2
	1-2x10	4 - 5	3 - 5	2 - 10	4 - 5	3 - 5	2 - 10	4 - 2	3 - 2	2 - 8	3 - 11	3 - 0	2 - 6
	1-2x12	5 - 3	4 - 0	3 - 4	5 - 2	4 - 0	3 - 4	4 - 10	3 - 9	3 - 2	4 - 7	3 - 6	3 - 0
	2-2x4	2 - 11	2 - 3	1 - 10	2 - 11	2 - 3	1 - 10	2 - 9	2 - 1	1 - 9	2 - 7	2 - 0	1 - 8
	2-2x6	4 - 4	3 - 4	2 - 10	4 - 4	3 - 4	2 - 10	4 - 1	3 - 2	2 - 8	3 - 10	3 - 0	2 - 6
	2-2x8	5 - 6	4 - 3	3 - 7	5 - 6	4 - 3	3 - 7	5 - 2	4 - 0	3 - 4	4 - 10	3 - 9	3 - 2
	2-2x10	6 - 7	5 - 0	4 - 2	6 - 7	5 - 0	4 - 2	6 - 1	4 - 9	4 - 0	5 - 9	4 - 5	3 - 9
	2-2x12	7 - 9	5 - 11	4 - 11	7 - 9	5 - 11	4 - 11	7 - 2	5 - 7	4 - 8	6 - 9	5 - 3	4 - 5
	3-2x8	6 - 11	5 - 3	4 - 5	6 - 11	5 - 3	4 - 5	6 - 5	5 - 0	4 - 2	6 - 1	4 - 8	4 - 0
	3-2x10	8 - 3	6 - 3	5 - 3	8 - 3	6 - 3	5 - 3	7 - 8	5 - 11	5 - 0	7 - 3	5 - 7	4 - 8
	3-2x12	9 - 8	7 - 5	6 - 2	9 - 8	7 - 5	6 - 2	9 - 0	7 - 0	5 - 10	8 - 6	6 - 7	5 - 6
	4-2x8	8 - 0	6 - 1	5 - 1	8 - 0	6 - 1	5 - 1	7 - 5	5 - 9	4 - 10	7 - 0	5 - 5	4 - 7
	4-2x10	9 - 6	7 - 3	6 - 1	9 - 6	7 - 3	6 - 1	8 - 10	6 - 10	5 - 9	8 - 4	6 - 5	5 - 5
	4-2x12	11 - 2	8 - 6	7 - 2	11 - 2	8 - 6	7 - 2	10 - 5	8 - 0	6 - 9	9 - 10	7 - 7	6 - 5
	Size	Maximum Header/Girder Spans (ft-in.) for Glued Laminated Timber Beams[2,3,4]											
	3.125x5.500	6 - 0	4 - 7	3 - 10	6 - 0	4 - 7	3 - 10	5 - 7	4 - 4	3 - 8	5 - 3	4 - 1	3 - 5
	3.125x6.875	7 - 6	5 - 9	4 - 10	7 - 6	5 - 9	4 - 10	7 - 0	5 - 5	4 - 7	6 - 7	5 - 1	4 - 3
	3.125x8.250	9 - 0	6 - 10	5 - 9	9 - 0	6 - 10	5 - 9	8 - 5	6 - 6	5 - 6	7 - 11	6 - 1	5 - 2
	3.125x9.625	10 - 6	8 - 0	6 - 9	10 - 6	8 - 0	6 - 9	9 - 10	7 - 7	6 - 4	9 - 3	7 - 1	6 - 0
	3.125x11.000	12 - 0	9 - 2	7 - 8	12 - 0	9 - 2	7 - 8	11 - 2	8 - 8	7 - 3	10 - 6	8 - 2	6 - 10
	3.125x12.375	13 - 6	10 - 4	8 - 8	13 - 6	10 - 4	8 - 8	12 - 7	9 - 9	8 - 2	11 - 10	9 - 2	7 - 9
	3.125x13.750	15 - 0	11 - 5	9 - 7	15 - 0	11 - 5	9 - 7	14 - 0	10 - 9	9 - 1	13 - 2	10 - 2	8 - 7
	3.125x15.125	16 - 6	12 - 7	10 - 7	16 - 6	12 - 7	10 - 7	15 - 5	11 - 10	10 - 0	14 - 6	11 - 2	9 - 5
	3.125x16.500	18 - 0	13 - 9	11 - 6	18 - 0	13 - 9	11 - 6	16 - 10	12 - 11	10 - 11	15 - 10	12 - 2	10 - 3
	3.125x17.875	19 - 7	14 - 11	12 - 6	19 - 6	14 - 11	12 - 6	18 - 2	14 - 0	11 - 10	17 - 1	13 - 2	11 - 2
	3.125x19.250	20-0†	16 - 0	13 - 5	20-0†	16 - 0	13 - 5	19 - 7	15 - 1	12 - 9	18 - 5	14 - 3	12 - 0
	3.125x20.625	20-0†	17 - 2	14 - 5	20-0†	17 - 2	14 - 5	20-0†	16 - 2	13 - 8	19 - 9	15 - 3	12 - 10
	3.125x22.000	20-0†	18 - 4	15 - 5	20-0†	18 - 4	15 - 5	20-0†	17 - 3	14 - 7	20-0†	16 - 3	13 - 8
	3.125x23.375	20-0†	19 - 5	16 - 4	20-0†	19 - 5	16 - 4	20-0†	18 - 4	15 - 6	20-0†	17 - 3	14 - 7
	3.125x24.750	20-0†	20-0†	17 - 3	20-0†	20-0†	17 - 3	20-0†	19 - 3	16 - 5	20-0†	18 - 2	15 - 5
	5.125x5.500	7 - 8	5 - 10	4 - 11	7 - 8	5 - 10	4 - 11	7 - 2	5 - 6	4 - 8	6 - 8	5 - 2	4 - 5
	5.125x6.875	9 - 8	7 - 4	6 - 2	9 - 7	7 - 4	6 - 2	9 - 0	6 - 11	5 - 10	8 - 4	6 - 6	5 - 6
	5.125x8.250	11 - 7	8 - 10	7 - 5	11 - 6	8 - 10	7 - 5	10 - 9	8 - 3	7 - 0	10 - 0	7 - 10	6 - 7
	5.125x9.625	13 - 6	10 - 3	8 - 7	13 - 5	10 - 3	8 - 7	12 - 6	9 - 8	8 - 2	11 - 8	9 - 1	7 - 8
	5.125x11.000	15 - 5	11 - 9	9 - 10	15 - 4	11 - 9	9 - 10	14 - 4	11 - 1	9 - 4	13 - 4	10 - 5	8 - 9
	5.125x12.375	17 - 4	13 - 2	11 - 1	17 - 3	13 - 2	11 - 1	16 - 1	12 - 5	10 - 6	15 - 0	11 - 9	9 - 10
	5.125x13.750	19 - 2	14 - 8	12 - 4	19 - 2	14 - 8	12 - 4	17 - 11	13 - 10	11 - 8	16 - 8	13 - 0	11 - 0
	5.125x15.125	20-0†	16 - 2	13 - 6	20-0†	16 - 2	13 - 6	19 - 7	15 - 2	12 - 10	18 - 4	14 - 4	12 - 1
	5.125x16.500	20-0†	17 - 6	14 - 9	20-0†	17 - 6	14 - 9	20-0†	16 - 6	14 - 0	20 - 0	15 - 7	13 - 2
	5.125x17.875	20-0†	18 - 10	15 - 11	20-0†	18 - 10	15 - 11	20-0†	17 - 9	15 - 1	20-0†	16 - 9	14 - 3
	5.125x19.250	20-0†	20-0†	17 - 0	20-0†	20-0†	17 - 0	20-0†	19 - 0	16 - 2	20-0†	17 - 11	15 - 3
	5.125x20.625	20-0†	20-0†	18 - 1	20-0†	20-0†	18 - 1	20-0†	20-0†	17 - 2	20-0†	19 - 1	16 - 3
	5.125x22.000	20-0†	20-0†	19 - 2	20-0†	20-0†	19 - 2	20-0†	20-0†	18 - 3	20-0†	20-0†	17 - 2
	5.125x23.375	20-0†	20-0†	20-0†	20-0†	20-0†	20-0†	20-0†	20-0†	19 - 3	20-0†	20-0†	18 - 2
	5.125x24.750	20-0†	20-0†	20-0†	20-0†	20-0†	20-0†	20-0†	20-0†	20-0†	20-0†	20-0†	19 - 2

† Spans are limited to 20 feet in length.

1 Tabulated spans are based on the lowest F_b, F_v, and E for #2 Grade Douglas Fir-Larch, Hem-Fir, Southern Pine, and Spruce-Pine-Fir. For #3 Grade lumber, spans shall be multiplied by 0.75.

2 Tabulated spans assume 20F combination glulam with a minimum F_{bx}=2,000psi, F_{vx}=210psi, and E=1,500,000psi.

3 The number of jack studs required at each end of the header shall be determined from Table 3.22F.

4 Spans checked for live load deflection only.

Copyright © American Wood Council. Downloaded/printed pursuant to License Agreement. No reproduction or transfer authorized.

Table 3.22D1 Laterally Unsupported (Dropped) Header Spans for Exterior Loadbearing Walls

Dropped Exterior

(Supporting a Roof, Ceiling, and Two Center Bearing Floors) Dead Load Assumptions:

Roof/Ceiling Assembly = 20 psf, Floor Assembly = 10psf, Wall Assembly = 121plf, L/Δ_{LL}=360

		Roof Live Load			Ground Snow Load								
		20 psf			30 psf			50 psf			70 psf		
		Building Width (ft)											
		12	24	36	12	24	36	12	24	36	12	24	36
Headers Supporting	Size	Maximum Header/Girder Spans (ft-in.) for Common Lumber Species[1,3,4]											
Roof, Ceiling, and Two Center Bearing Floors	1-2x6	2 - 8	2 - 1	1 - 10	2 - 8	2 - 1	1 - 10	2 - 6	2 - 0	1 - 9	2 - 5	1 - 11	1 - 7
	1-2x8	3 - 4	2 - 8	2 - 3	3 - 4	2 - 8	2 - 3	3 - 2	2 - 6	2 - 2	3 - 0	2 - 5	2 - 1
	1-2x10	3 - 11	3 - 2	2 - 8	3 - 11	3 - 2	2 - 8	3 - 9	3 - 0	2 - 7	3 - 6	2 - 10	2 - 5
	1-2x12	4 - 6	3 - 8	3 - 2	4 - 6	3 - 8	3 - 2	4 - 3	3 - 5	3 - 0	4 - 1	3 - 3	2 - 10
	2-2x4	2 - 8	2 - 1	1 - 9	2 - 8	2 - 1	1 - 9	2 - 6	2 - 0	1 - 8	2 - 5	1 - 11	1 - 7
	2-2x6	3 - 11	3 - 1	2 - 8	3 - 11	3 - 1	2 - 8	3 - 8	3 - 0	2 - 6	3 - 6	2 - 10	2 - 5
	2-2x8	4 - 10	3 - 11	3 - 4	4 - 10	3 - 11	3 - 4	4 - 7	3 - 8	3 - 2	4 - 4	3 - 6	3 - 0
	2-2x10	5 - 7	4 - 6	3 - 11	5 - 6	4 - 6	3 - 11	5 - 2	4 - 3	3 - 8	5 - 0	4 - 1	3 - 6
	2-2x12	6 - 2	5 - 1	4 - 6	6 - 0	5 - 1	4 - 5	5 - 9	4 - 10	4 - 3	5 - 6	4 - 7	4 - 0
	3-2x8	5 - 11	4 - 9	4 - 1	5 - 10	4 - 9	4 - 1	5 - 7	4 - 6	3 - 11	5 - 4	4 - 4	3 - 8
	3-2x10	6 - 8	5 - 6	4 - 9	6 - 6	5 - 5	4 - 9	6 - 2	5 - 2	4 - 6	5 - 11	4 - 11	4 - 3
	3-2x12	7 - 2	6 - 0	5 - 4	7 - 0	5 - 11	5 - 3	6 - 8	5 - 8	5 - 0	6 - 5	5 - 5	4 - 10
	4-2x8	6 - 8	5 - 5	4 - 9	6 - 7	5 - 5	4 - 9	6 - 3	5 - 2	4 - 5	6 - 0	4 - 11	4 - 3
	4-2x10	7 - 5	6 - 2	5 - 5	7 - 3	6 - 1	5 - 4	6 - 11	5 - 9	5 - 1	6 - 8	5 - 6	4 - 10
	4-2x12	7 - 11	6 - 8	6 - 0	7 - 9	6 - 7	5 - 10	7 - 5	6 - 3	5 - 7	7 - 2	6 - 0	5 - 4
	Size	Maximum Header/Girder Spans (ft-in.) for Glued Laminated Timber Beams[2,3,4]											
	3.125x5.500	5 - 5	4 - 4	3 - 8	5 - 5	4 - 4	3 - 8	5 - 2	4 - 1	3 - 6	4 - 11	3 - 11	3 - 4
	3.125x6.875	6 - 9	5 - 5	4 - 7	6 - 9	5 - 5	4 - 7	6 - 5	5 - 2	4 - 5	6 - 1	4 - 10	4 - 2
	3.125x8.250	8 - 1	6 - 5	5 - 6	8 - 1	6 - 5	5 - 6	7 - 8	6 - 2	5 - 3	7 - 4	5 - 10	5 - 0
	3.125x9.625	9 - 5	7 - 6	6 - 5	9 - 5	7 - 6	6 - 5	8 - 11	7 - 1	6 - 1	8 - 6	6 - 9	5 - 9
	3.125x11.000	10 - 8	8 - 6	7 - 3	10 - 8	8 - 6	7 - 3	10 - 1	8 - 1	6 - 11	9 - 7	7 - 8	6 - 6
	3.125x12.375	11 - 9	9 - 5	8 - 1	11 - 8	9 - 5	8 - 1	11 - 1	8 - 11	7 - 8	10 - 7	8 - 6	7 - 3
	3.125x13.750	12 - 9	10 - 4	8 - 11	12 - 6	10 - 3	8 - 11	11 - 11	9 - 9	8 - 5	11 - 5	9 - 3	8 - 0
	3.125x15.125	13 - 6	11 - 1	9 - 7	13 - 2	11 - 0	9 - 7	12 - 7	10 - 5	9 - 1	12 - 1	9 - 11	8 - 7
	3.125x16.500	14 - 0	11 - 9	10 - 3	13 - 8	11 - 6	10 - 1	13 - 1	10 - 11	9 - 7	12 - 7	10 - 5	9 - 2
	3.125x17.875	14 - 5	12 - 2	10 - 9	14 - 2	11 - 11	10 - 7	13 - 6	11 - 4	10 - 0	13 - 0	10 - 10	9 - 7
	3.125x19.250	14 - 10	12 - 6	11 - 1	14 - 7	12 - 3	10 - 11	13 - 11	11 - 9	10 - 5	13 - 5	11 - 3	10 - 0
	3.125x20.625	15 - 2	12 - 9	11 - 5	14 - 11	12 - 7	11 - 3	14 - 3	12 - 0	10 - 9	13 - 9	11 - 7	10 - 4
	3.125x22.000	15 - 6	13 - 1	11 - 8	15 - 3	12 - 11	11 - 7	14 - 7	12 - 4	11 - 0	14 - 0	11 - 10	10 - 7
	3.125x23.375	15 - 9	13 - 4	12 - 0	15 - 6	13 - 2	11 - 10	14 - 10	12 - 7	11 - 4	14 - 4	12 - 2	10 - 10
	3.125x24.750	16 - 1	13 - 7	12 - 3	15 - 10	13 - 5	12 - 1	15 - 2	12 - 11	11 - 7	14 - 7	12 - 5	11 - 1
	5.125x5.500	7 - 0	5 - 6	4 - 9	7 - 0	5 - 6	4 - 9	6 - 8	5 - 3	4 - 6	6 - 4	5 - 0	4 - 3
	5.125x6.875	8 - 9	6 - 11	5 - 11	8 - 9	6 - 11	5 - 11	8 - 4	6 - 7	5 - 8	7 - 10	6 - 3	5 - 4
	5.125x8.250	10 - 6	8 - 3	7 - 1	10 - 6	8 - 3	7 - 1	9 - 11	7 - 11	6 - 9	9 - 5	7 - 6	6 - 5
	5.125x9.625	12 - 2	9 - 8	8 - 3	12 - 2	9 - 8	8 - 3	11 - 7	9 - 2	7 - 10	11 - 0	8 - 8	7 - 5
	5.125x11.000	13 - 11	11 - 0	9 - 5	13 - 11	11 - 0	9 - 5	13 - 2	10 - 6	9 - 0	12 - 6	9 - 11	8 - 6
	5.125x12.375	15 - 7	12 - 4	10 - 7	15 - 7	12 - 4	10 - 7	14 - 9	11 - 9	10 - 1	14 - 0	11 - 2	9 - 6
	5.125x13.750	17 - 3	13 - 8	11 - 8	17 - 3	13 - 8	11 - 8	16 - 4	13 - 0	11 - 2	15 - 6	12 - 4	10 - 7
	5.125x15.125	18 - 10	15 - 0	12 - 10	18 - 10	15 - 0	12 - 10	17 - 10	14 - 3	12 - 3	16 - 11	13 - 6	11 - 7
	5.125x16.500	20-0†	16 - 3	13 - 11	20-0†	16 - 3	13 - 11	19 - 3	15 - 5	13 - 3	18 - 4	14 - 8	12 - 7
	5.125x17.875	20-0†	17 - 6	15 - 0	20-0†	17 - 6	15 - 0	20-0†	16 - 7	14 - 3	19 - 7	15 - 9	13 - 6
	5.125x19.250	20-0†	18 - 8	16 - 1	20-0†	18 - 8	16 - 1	20-0†	17 - 8	15 - 3	20-0†	16 - 9	14 - 5
	5.125x20.625	20-0†	19 - 9	17 - 1	20-0†	19 - 8	17 - 1	20-0†	18 - 8	16 - 2	20-0†	17 - 9	15 - 4
	5.125x22.000	20-0†	20-0†	18 - 0	20-0†	20-0†	18 - 0	20-0†	19 - 6	17 - 0	20-0†	18 - 7	16 - 2
	5.125x23.375	20-0†	20-0†	18 - 10	20-0†	20-0†	18 - 8	20-0†	20-0†	17 - 8	20-0†	19 - 4	16 - 10
	5.125x24.750	20-0†	20-0†	19 - 7	20-0†	20-0†	19 - 4	20-0†	20-0†	18 - 4	20-0†	20 - 0	17 - 6

† Spans are limited to 20 feet in length.

1 Tabulated spans are based on the lowest F_b, F_v, and E for #2 Grade Douglas Fir-Larch, Hem-Fir, Southern Pine, and Spruce-Pine-Fir. For #3 Grade lumber, spans shall be multiplied by 0.75.

2 Tabulated spans assume 20F combination glulam with a minimum F_{bx}=2,000psi, F_{vx}=210psi, and E=1,500,000psi.

3 The number of jack studs required at each end of the header shall be determined from Table 3.22F.

4 Spans checked for live load deflection only.

Copyright © American Wood Council. Downloaded/printed pursuant to License Agreement. No reproduction or transfer authorized.

Table 3.22D2 Laterally Supported (Raised) Header Spans for Exterior Loadbearing Walls

Raised Exterior

(Supporting a Roof, Ceiling, and Two Center Bearing Floors) Dead Load Assumptions:

Roof/Ceiling Assembly = 20 psf, Floor Assembly = 10psf, Wall Assembly = 121plf, L/Δ_{LL}=360

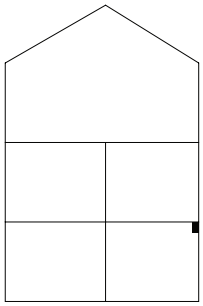

Headers Supporting	Size	Roof Live Load 20 psf			Ground Snow Load 30 psf			Ground Snow Load 50 psf			Ground Snow Load 70 psf		
		Building Width (ft)											
		12	24	36	12	24	36	12	24	36	12	24	36
		Maximum Header/Girder Spans (ft-in.) for Common Lumber Species[1,3,4]											
Roof, Ceiling, and Two Center Bearing Floors	1-2x6	2 - 8	2 - 1	1 - 10	2 - 8	2 - 1	1 - 10	2 - 7	2 - 0	1 - 9	2 - 5	1 - 11	1 - 8
	1-2x8	3 - 5	2 - 8	2 - 4	3 - 5	2 - 8	2 - 4	3 - 3	2 - 7	2 - 2	3 - 1	2 - 5	2 - 1
	1-2x10	4 - 0	3 - 2	2 - 9	4 - 0	3 - 2	2 - 9	3 - 10	3 - 1	2 - 7	3 - 8	2 - 11	2 - 5
	1-2x12	4 - 9	3 - 9	3 - 2	4 - 9	3 - 9	3 - 2	4 - 6	3 - 7	3 - 1	4 - 3	3 - 5	2 - 11
	2-2x4	2 - 8	2 - 1	1 - 9	2 - 8	2 - 1	1 - 9	2 - 6	2 - 0	1 - 8	2 - 5	1 - 11	1 - 7
	2-2x6	4 - 0	3 - 2	2 - 8	4 - 0	3 - 2	2 - 8	3 - 9	3 - 0	2 - 7	3 - 7	2 - 10	2 - 5
	2-2x8	5 - 0	4 - 0	3 - 5	5 - 0	4 - 0	3 - 5	4 - 10	3 - 10	3 - 3	4 - 7	3 - 7	3 - 1
	2-2x10	6 - 0	4 - 9	4 - 0	6 - 0	4 - 9	4 - 0	5 - 8	4 - 6	3 - 10	5 - 5	4 - 3	3 - 8
	2-2x12	7 - 0	5 - 7	4 - 9	7 - 0	5 - 7	4 - 9	6 - 8	5 - 4	4 - 6	6 - 4	5 - 0	4 - 3
	3-2x8	6 - 4	5 - 0	4 - 3	6 - 4	5 - 0	4 - 3	6 - 0	4 - 9	4 - 1	5 - 8	4 - 6	3 - 10
	3-2x10	7 - 6	5 - 11	5 - 1	7 - 6	5 - 11	5 - 1	7 - 1	5 - 8	4 - 10	6 - 9	5 - 4	4 - 7
	3-2x12	8 - 10	7 - 0	5 - 11	8 - 10	7 - 0	5 - 11	8 - 5	6 - 8	5 - 8	8 - 0	6 - 4	5 - 4
	4-2x8	7 - 3	5 - 9	4 - 11	7 - 3	5 - 9	4 - 11	6 - 11	5 - 6	4 - 8	6 - 7	5 - 2	4 - 5
	4-2x10	8 - 8	6 - 10	5 - 10	8 - 8	6 - 10	5 - 10	8 - 3	6 - 6	5 - 7	7 - 10	6 - 2	5 - 3
	4-2x12	10 - 2	8 - 1	6 - 10	10 - 2	8 - 1	6 - 10	9 - 8	7 - 8	6 - 7	9 - 2	7 - 3	6 - 2
	Size	Maximum Header/Girder Spans (ft-in.) for Glued Laminated Timber Beams[2,3,4]											
	3.125x5.500	5 - 6	4 - 4	3 - 8	5 - 6	4 - 4	3 - 8	5 - 2	4 - 2	3 - 6	4 - 11	3 - 11	3 - 4
	3.125x6.875	6 - 10	5 - 5	4 - 7	6 - 10	5 - 5	4 - 7	6 - 6	5 - 2	4 - 5	6 - 2	4 - 11	4 - 2
	3.125x8.250	8 - 2	6 - 6	5 - 6	8 - 2	6 - 6	5 - 6	7 - 10	6 - 2	5 - 3	7 - 5	5 - 10	5 - 0
	3.125x9.625	9 - 7	7 - 7	6 - 6	9 - 7	7 - 7	6 - 6	9 - 1	7 - 3	6 - 2	8 - 8	6 - 10	5 - 10
	3.125x11.000	10 - 11	8 - 8	7 - 5	10 - 11	8 - 8	7 - 5	10 - 5	8 - 3	7 - 1	9 - 10	7 - 10	6 - 8
	3.125x12.375	12 - 4	9 - 9	8 - 4	12 - 4	9 - 9	8 - 4	11 - 9	9 - 3	7 - 11	11 - 1	8 - 9	7 - 6
	3.125x13.750	13 - 8	10 - 10	9 - 3	13 - 8	10 - 10	9 - 3	13 - 0	10 - 4	8 - 10	12 - 4	9 - 9	8 - 4
	3.125x15.125	15 - 1	11 - 11	10 - 2	15 - 1	11 - 11	10 - 2	14 - 4	11 - 4	9 - 8	13 - 7	10 - 9	9 - 2
	3.125x16.500	16 - 5	13 - 0	11 - 1	16 - 5	13 - 0	11 - 1	15 - 7	12 - 5	10 - 7	14 - 10	11 - 9	10 - 0
	3.125x17.875	17 - 9	14 - 1	12 - 0	17 - 9	14 - 1	12 - 0	16 - 11	13 - 5	11 - 5	16 - 0	12 - 8	10 - 10
	3.125x19.250	19 - 2	15 - 2	12 - 11	19 - 2	15 - 2	12 - 11	18 - 3	14 - 5	12 - 4	17 - 3	13 - 8	11 - 8
	3.125x20.625	20-0†	16 - 3	13 - 10	20-0†	16 - 3	13 - 10	19 - 6	15 - 6	13 - 3	18 - 6	14 - 8	12 - 6
	3.125x22.000	20-0†	17 - 4	14 - 9	20-0†	17 - 4	14 - 9	20-0†	16 - 6	14 - 1	19 - 8	15 - 7	13 - 4
	3.125x23.375	20-0†	18 - 4	15 - 8	20-0†	18 - 4	15 - 8	20-0†	17 - 7	15 - 0	20-0†	16 - 7	14 - 2
	3.125x24.750	20-0†	19 - 4	16 - 7	20-0†	19 - 4	16 - 7	20-0†	18 - 6	15 - 10	20-0†	17 - 6	15 - 0
	5.125x5.500	7 - 0	5 - 6	4 - 9	7 - 0	5 - 6	4 - 9	6 - 8	5 - 3	4 - 6	6 - 4	5 - 0	4 - 3
	5.125x6.875	8 - 9	6 - 11	5 - 11	8 - 9	6 - 11	5 - 11	8 - 4	6 - 7	5 - 8	7 - 11	6 - 3	5 - 4
	5.125x8.250	10 - 6	8 - 4	7 - 1	10 - 6	8 - 4	7 - 1	10 - 0	7 - 11	6 - 9	9 - 6	7 - 6	6 - 5
	5.125x9.625	12 - 3	9 - 8	8 - 3	12 - 3	9 - 8	8 - 3	11 - 8	9 - 3	7 - 11	11 - 1	8 - 9	7 - 6
	5.125x11.000	14 - 0	11 - 1	9 - 5	14 - 0	11 - 1	9 - 5	13 - 4	10 - 7	9 - 0	12 - 8	10 - 0	8 - 6
	5.125x12.375	15 - 9	12 - 6	10 - 8	15 - 9	12 - 6	10 - 8	15 - 0	11 - 11	10 - 2	14 - 3	11 - 3	9 - 7
	5.125x13.750	17 - 6	13 - 10	11 - 10	17 - 6	13 - 10	11 - 10	16 - 8	13 - 3	11 - 3	15 - 10	12 - 6	10 - 8
	5.125x15.125	19 - 2	15 - 3	13 - 0	19 - 2	15 - 3	13 - 0	18 - 3	14 - 6	12 - 5	17 - 4	13 - 9	11 - 9
	5.125x16.500	20-0†	16 - 7	14 - 2	20-0†	16 - 7	14 - 2	19 - 9	15 - 10	13 - 6	18 - 9	15 - 0	12 - 10
	5.125x17.875	20-0†	17 - 10	15 - 4	20-0†	17 - 10	15 - 4	20-0†	17 - 0	14 - 8	20-0†	16 - 2	13 - 10
	5.125x19.250	20-0†	19 - 0	16 - 4	20-0†	19 - 0	16 - 4	20-0†	18 - 2	15 - 8	20-0†	17 - 3	14 - 10
	5.125x20.625	20-0†	20-0†	17 - 5	20-0†	20-0†	17 - 5	20-0†	19 - 4	16 - 8	20-0†	18 - 5	15 - 9
	5.125x22.000	20-0†	20-0†	18 - 6	20-0†	20-0†	18 - 6	20-0†	20-0†	17 - 8	20-0†	19 - 6	16 - 9
	5.125x23.375	20-0†	20-0†	19 - 6	20-0†	20-0†	19 - 6	20-0†	20-0†	18 - 8	20-0†	20-0†	17 - 8
	5.125x24.750	20-0†	20-0†	20-0†	20-0†	20-0†	20-0†	20-0†	20-0†	19 - 8	20-0†	20-0†	18 - 7

† Spans are limited to 20 feet in length.

1 Tabulated spans are based on the lowest F_b, F_v, and E for #2 Grade Douglas Fir-Larch, Hem-Fir, Southern Pine, and Spruce-Pine-Fir. For #3 Grade lumber, spans shall be multiplied by 0.75.

2 Tabulated spans assume 20F combination glulam with a minimum F_{bx}=2,000psi, F_{vx}=210psi, and E=1,500,000psi.

3 The number of jack studs required at each end of the header shall be determined from Table 3.22F.

4 Spans checked for live load deflection only.

Copyright © American Wood Council. Downloaded/printed pursuant to License Agreement. No reproduction or transfer authorized.

Table 3.22E1 Laterally Unsupported (Dropped) Header Spans for Exterior Loadbearing Walls

Dropped Exterior

(Supporting a Roof, Ceiling, and Two Clear Span Floors) Dead Load Assumptions:

Roof/Ceiling Assembly = 20 psf, Floor Assembly = 10psf, Wall Assembly = 121plf, L/Δ_{LL}=360

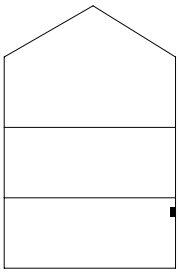

Headers Supporting	Size	Roof Live Load 20 psf			Ground Snow Load 30 psf			Ground Snow Load 50 psf			Ground Snow Load 70 psf		
		Building Width (ft)											
		12	24	36	12	24	36	12	24	36	12	24	36
		Maximum Header/Girder Spans (ft-in.) for Common Lumber Species[1,3,4]											
Roof, Ceiling, and Two Clear Span Floors	1-2x6	2 - 3	1 - 8	1 - 5	2 - 3	1 - 8	1 - 5	2 - 3	1 - 8	1 - 5	2 - 2	1 - 8	1 - 5
	1-2x8	2 - 10	2 - 2	1 - 10	2 - 10	2 - 2	1 - 10	2 - 10	2 - 2	1 - 10	2 - 8	2 - 1	1 - 9
	1-2x10	3 - 4	2 - 6	2 - 2	3 - 4	2 - 6	2 - 2	3 - 4	2 - 6	2 - 2	3 - 2	2 - 6	2 - 1
	1-2x12	3 - 10	3 - 0	2 - 6	3 - 10	3 - 0	2 - 6	3 - 10	3 - 0	2 - 6	3 - 8	2 - 11	2 - 5
	2-2x4	2 - 3	1 - 8	1 - 4	2 - 3	1 - 8	1 - 4	2 - 3	1 - 8	1 - 4	2 - 2	1 - 8	1 - 4
	2-2x6	3 - 3	2 - 6	2 - 1	3 - 3	2 - 6	2 - 1	3 - 3	2 - 6	2 - 1	3 - 2	2 - 5	2 - 1
	2-2x8	4 - 1	3 - 2	2 - 8	4 - 1	3 - 2	2 - 8	4 - 1	3 - 2	2 - 8	3 - 11	3 - 1	2 - 7
	2-2x10	4 - 9	3 - 8	3 - 2	4 - 9	3 - 8	3 - 2	4 - 9	3 - 8	3 - 2	4 - 7	3 - 7	3 - 1
	2-2x12	5 - 4	4 - 3	3 - 8	5 - 4	4 - 3	3 - 8	5 - 3	4 - 3	3 - 8	5 - 1	4 - 1	3 - 6
	3-2x8	5 - 0	3 - 11	3 - 4	5 - 0	3 - 11	3 - 4	5 - 0	3 - 11	3 - 4	4 - 10	3 - 10	3 - 3
	3-2x10	5 - 9	4 - 7	3 - 10	5 - 9	4 - 7	3 - 10	5 - 7	4 - 7	3 - 10	5 - 5	4 - 5	3 - 9
	3-2x12	6 - 4	5 - 2	4 - 5	6 - 4	5 - 2	4 - 5	6 - 2	5 - 1	4 - 5	5 - 11	4 - 11	4 - 3
	4-2x8	5 - 9	4 - 6	3 - 10	5 - 9	4 - 6	3 - 10	5 - 8	4 - 6	3 - 10	5 - 6	4 - 4	3 - 9
	4-2x10	6 - 6	5 - 2	4 - 5	6 - 6	5 - 2	4 - 5	6 - 4	5 - 2	4 - 5	6 - 1	5 - 0	4 - 3
	4-2x12	7 - 1	5 - 9	5 - 0	7 - 1	5 - 9	5 - 0	6 - 10	5 - 8	5 - 0	6 - 7	5 - 6	4 - 10
	Size	Maximum Header/Girder Spans (ft-in.) for Glued Laminated Timber Beams[2,3,4]											
	3.125x5.500	4 - 7	3 - 6	2 - 11	4 - 7	3 - 6	2 - 11	4 - 7	3 - 6	2 - 11	4 - 5	3 - 5	2 - 10
	3.125x6.875	5 - 8	4 - 4	3 - 7	5 - 8	4 - 4	3 - 7	5 - 8	4 - 4	3 - 7	5 - 6	4 - 3	3 - 6
	3.125x8.250	6 - 10	5 - 2	4 - 4	6 - 10	5 - 2	4 - 4	6 - 10	5 - 2	4 - 4	6 - 7	5 - 1	4 - 3
	3.125x9.625	7 - 11	6 - 1	5 - 1	7 - 11	6 - 1	5 - 1	7 - 11	6 - 1	5 - 1	7 - 7	5 - 11	4 - 11
	3.125x11.000	9 - 0	6 - 11	5 - 9	9 - 0	6 - 11	5 - 9	9 - 0	6 - 11	5 - 9	8 - 7	6 - 9	5 - 8
	3.125x12.375	10 - 0	7 - 8	6 - 6	10 - 0	7 - 8	6 - 6	9 - 11	7 - 8	6 - 6	9 - 7	7 - 6	6 - 4
	3.125x13.750	10 - 10	8 - 5	7 - 2	10 - 10	8 - 5	7 - 2	10 - 9	8 - 5	7 - 2	10 - 4	8 - 2	7 - 0
	3.125x15.125	11 - 8	9 - 2	7 - 9	11 - 8	9 - 2	7 - 9	11 - 5	9 - 2	7 - 9	11 - 0	8 - 10	7 - 7
	3.125x16.500	12 - 3	9 - 9	8 - 4	12 - 3	9 - 9	8 - 4	11 - 11	9 - 8	8 - 4	11 - 7	9 - 4	8 - 1
	3.125x17.875	12 - 9	10 - 3	8 - 11	12 - 9	10 - 3	8 - 11	12 - 5	10 - 2	8 - 10	12 - 0	9 - 10	8 - 7
	3.125x19.250	13 - 2	10 - 9	9 - 4	13 - 2	10 - 9	9 - 4	12 - 9	10 - 6	9 - 3	12 - 4	10 - 2	9 - 0
	3.125x20.625	13 - 7	11 - 1	9 - 9	13 - 6	11 - 1	9 - 9	13 - 1	10 - 10	9 - 7	12 - 8	10 - 6	9 - 3
	3.125x22.000	13 - 11	11 - 5	10 - 1	13 - 10	11 - 5	10 - 1	13 - 4	11 - 2	9 - 10	13 - 0	10 - 10	9 - 7
	3.125x23.375	14 - 2	11 - 9	10 - 4	14 - 1	11 - 9	10 - 4	13 - 8	11 - 5	10 - 2	13 - 3	11 - 1	9 - 10
	3.125x24.750	14 - 6	12 - 0	10 - 7	14 - 4	12 - 0	10 - 7	13 - 11	11 - 8	10 - 4	13 - 6	11 - 4	10 - 1
	5.125x5.500	5 - 10	4 - 6	3 - 9	5 - 10	4 - 6	3 - 9	5 - 10	4 - 6	3 - 9	5 - 8	4 - 5	3 - 8
	5.125x6.875	7 - 4	5 - 7	4 - 8	7 - 4	5 - 7	4 - 8	7 - 4	5 - 7	4 - 8	7 - 1	5 - 6	4 - 7
	5.125x8.250	8 - 9	6 - 8	5 - 7	8 - 9	6 - 8	5 - 7	8 - 9	6 - 8	5 - 7	8 - 6	6 - 7	5 - 6
	5.125x9.625	10 - 2	7 - 10	6 - 7	10 - 2	7 - 10	6 - 7	10 - 2	7 - 10	6 - 7	9 - 10	7 - 8	6 - 5
	5.125x11.000	11 - 8	8 - 11	7 - 6	11 - 8	8 - 11	7 - 6	11 - 8	8 - 11	7 - 6	11 - 3	8 - 8	7 - 4
	5.125x12.375	13 - 1	10 - 0	8 - 5	13 - 1	10 - 0	8 - 5	13 - 1	10 - 0	8 - 5	12 - 7	9 - 9	8 - 3
	5.125x13.750	14 - 6	11 - 1	9 - 4	14 - 6	11 - 1	9 - 4	14 - 6	11 - 1	9 - 4	14 - 0	10 - 10	9 - 2
	5.125x15.125	15 - 10	12 - 2	10 - 3	15 - 10	12 - 2	10 - 3	15 - 10	12 - 2	10 - 3	15 - 3	11 - 10	10 - 1
	5.125x16.500	17 - 2	13 - 2	11 - 1	17 - 2	13 - 2	11 - 1	17 - 2	13 - 2	11 - 1	16 - 6	12 - 11	10 - 11
	5.125x17.875	18 - 6	14 - 3	12 - 0	18 - 6	14 - 3	12 - 0	18 - 5	14 - 3	12 - 0	17 - 9	13 - 10	11 - 9
	5.125x19.250	19 - 8	15 - 3	12 - 10	19 - 8	15 - 3	12 - 10	19 - 7	15 - 3	12 - 10	18 - 10	14 - 10	12 - 7
	5.125x20.625	20-0†	16 - 2	13 - 9	20-0†	16 - 2	13 - 9	20-0†	16 - 2	13 - 9	19 - 10	15 - 9	13 - 5
	5.125x22.000	20-0†	17 - 1	14 - 6	20-0†	17 - 1	14 - 6	20-0†	17 - 1	14 - 6	20-0†	16 - 6	14 - 2
	5.125x23.375	20-0†	17 - 11	15 - 3	20-0†	17 - 11	15 - 3	20-0†	17 - 11	15 - 3	20-0†	17 - 3	14 - 10
	5.125x24.750	20-0†	18 - 8	16 - 0	20-0†	18 - 8	16 - 0	20-0†	18 - 6	16 - 0	20-0†	17 - 11	15 - 6

† Spans are limited to 20 feet in length.

1 Tabulated spans are based on the lowest F_b, F_v, and E for #2 Grade Douglas Fir-Larch, Hem-Fir, Southern Pine, and Spruce-Pine-Fir. For #3 Grade lumber, spans shall be multiplied by 0.75.

2 Tabulated spans assume 20F combination glulam with a minimum F_{bx}=2,000psi, F_{vx}=210psi, and E=1,500,000psi.

3 The number of jack studs required at each end of the header shall be determined from Table 3.22F.

4 Spans checked for live load deflection only.

Copyright © American Wood Council. Downloaded/printed pursuant to License Agreement. No reproduction or transfer authorized.

Table 3.22E2 Laterally Supported (Raised) Header Spans for Exterior Loadbearing Walls

Raised Exterior

(Supporting a Roof, Ceiling, and Two Clear Span Floors) Dead Load Assumptions:

Roof/Ceiling Assembly = 20 psf, Floor Assembly = 10psf, Wall Assembly = 121plf, L/Δ_{LL}=360

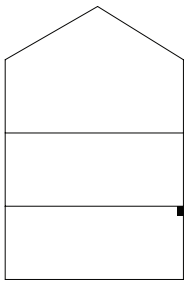

Headers Supporting	Size	Roof Live Load 20 psf			Ground Snow Load 30 psf			Ground Snow Load 50 psf			Ground Snow Load 70 psf		
		Building Width (ft)											
		12	24	36	12	24	36	12	24	36	12	24	36
		Maximum Header/Girder Spans (ft-in.) for Common Lumber Species[1,3,4]											
Roof, Ceiling, and Two Clear Span Floors	1-2x6	2 - 3	1 - 9	1 - 5	2 - 3	1 - 9	1 - 5	2 - 3	1 - 9	1 - 5	2 - 2	1 - 8	1 - 5
	1-2x8	2 - 10	2 - 2	1 - 10	2 - 10	2 - 2	1 - 10	2 - 10	2 - 2	1 - 10	2 - 9	2 - 1	1 - 10
	1-2x10	3 - 4	2 - 7	2 - 2	3 - 4	2 - 7	2 - 2	3 - 4	2 - 7	2 - 2	3 - 3	2 - 6	2 - 2
	1-2x12	4 - 0	3 - 0	2 - 7	4 - 0	3 - 0	2 - 7	4 - 0	3 - 0	2 - 7	3 - 10	3 - 0	2 - 6
	2-2x4	2 - 3	1 - 8	1 - 4	2 - 3	1 - 8	1 - 4	2 - 3	1 - 8	1 - 4	2 - 2	1 - 8	1 - 4
	2-2x6	3 - 4	2 - 6	2 - 2	3 - 4	2 - 6	2 - 2	3 - 4	2 - 6	2 - 2	3 - 3	2 - 6	2 - 1
	2-2x8	4 - 3	3 - 3	2 - 8	4 - 3	3 - 3	2 - 8	4 - 3	3 - 3	2 - 8	4 - 1	3 - 2	2 - 8
	2-2x10	5 - 0	3 - 10	3 - 2	5 - 0	3 - 10	3 - 2	5 - 0	3 - 10	3 - 2	4 - 10	3 - 9	3 - 2
	2-2x12	5 - 11	4 - 6	3 - 9	5 - 11	4 - 6	3 - 9	5 - 11	4 - 6	3 - 9	5 - 8	4 - 5	3 - 9
	3-2x8	5 - 3	4 - 0	3 - 5	5 - 3	4 - 0	3 - 5	5 - 3	4 - 0	3 - 5	5 - 1	3 - 11	3 - 4
	3-2x10	6 - 3	4 - 9	4 - 0	6 - 3	4 - 9	4 - 0	6 - 3	4 - 9	4 - 0	6 - 1	4 - 8	4 - 0
	3-2x12	7 - 5	5 - 8	4 - 9	7 - 5	5 - 8	4 - 9	7 - 5	5 - 8	4 - 9	7 - 2	5 - 6	4 - 8
	4-2x8	6 - 1	4 - 8	3 - 11	6 - 1	4 - 8	3 - 11	6 - 1	4 - 8	3 - 11	5 - 11	4 - 7	3 - 10
	4-2x10	7 - 3	5 - 6	4 - 8	7 - 3	5 - 6	4 - 8	7 - 3	5 - 6	4 - 8	7 - 0	5 - 5	4 - 7
	4-2x12	8 - 6	6 - 6	5 - 6	8 - 6	6 - 6	5 - 6	8 - 6	6 - 6	5 - 6	8 - 3	6 - 4	5 - 4
	Size	Maximum Header/Girder Spans (ft-in.) for Glued Laminated Timber Beams[2,3,4]											
	3.125x5.500	4 - 7	3 - 6	2 - 11	4 - 7	3 - 6	2 - 11	4 - 7	3 - 6	2 - 11	4 - 5	3 - 5	2 - 10
	3.125x6.875	5 - 9	4 - 4	3 - 7	5 - 9	4 - 4	3 - 7	5 - 9	4 - 4	3 - 7	5 - 6	4 - 3	3 - 6
	3.125x8.250	6 - 10	5 - 3	4 - 4	6 - 10	5 - 3	4 - 4	6 - 10	5 - 3	4 - 4	6 - 8	5 - 2	4 - 3
	3.125x9.625	8 - 0	6 - 1	5 - 1	8 - 0	6 - 1	5 - 1	8 - 0	6 - 1	5 - 1	7 - 9	6 - 0	4 - 11
	3.125x11.000	9 - 2	7 - 0	5 - 9	9 - 2	7 - 0	5 - 9	9 - 2	7 - 0	5 - 9	8 - 10	6 - 10	5 - 8
	3.125x12.375	10 - 4	7 - 10	6 - 6	10 - 4	7 - 10	6 - 6	10 - 4	7 - 10	6 - 6	10 - 0	7 - 8	6 - 4
	3.125x13.750	11 - 5	8 - 9	7 - 3	11 - 5	8 - 9	7 - 3	11 - 5	8 - 9	7 - 3	11 - 1	8 - 7	7 - 1
	3.125x15.125	12 - 7	9 - 7	7 - 11	12 - 7	9 - 7	7 - 11	12 - 7	9 - 7	7 - 11	12 - 2	9 - 5	7 - 9
	3.125x16.500	13 - 9	10 - 6	8 - 8	13 - 9	10 - 6	8 - 8	13 - 9	10 - 6	8 - 8	13 - 3	10 - 3	8 - 6
	3.125x17.875	14 - 11	11 - 4	9 - 5	14 - 11	11 - 4	9 - 5	14 - 11	11 - 4	9 - 5	14 - 5	11 - 1	9 - 2
	3.125x19.250	16 - 0	12 - 3	10 - 1	16 - 0	12 - 3	10 - 1	16 - 0	12 - 3	10 - 1	15 - 6	12 - 0	9 - 11
	3.125x20.625	17 - 2	13 - 1	10 - 10	17 - 2	13 - 1	10 - 10	17 - 2	13 - 1	10 - 10	16 - 7	12 - 10	10 - 7
	3.125x22.000	18 - 4	14 - 0	11 - 7	18 - 4	14 - 0	11 - 7	18 - 4	14 - 0	11 - 7	17 - 9	13 - 8	11 - 4
	3.125x23.375	19 - 4	14 - 10	12 - 3	19 - 4	14 - 10	12 - 3	19 - 4	14 - 10	12 - 3	18 - 9	14 - 6	12 - 0
	3.125x24.750	20-0†	15 - 9	13 - 0	20-0†	15 - 9	13 - 0	20-0†	15 - 9	13 - 0	19 - 9	15 - 5	12 - 9
	5.125x5.500	5 - 10	4 - 6	3 - 9	5 - 10	4 - 6	3 - 9	5 - 10	4 - 6	3 - 9	5 - 8	4 - 5	3 - 8
	5.125x6.875	7 - 4	5 - 7	4 - 8	7 - 4	5 - 7	4 - 8	7 - 4	5 - 7	4 - 8	7 - 1	5 - 6	4 - 7
	5.125x8.250	8 - 10	6 - 9	5 - 8	8 - 10	6 - 9	5 - 8	8 - 10	6 - 9	5 - 8	8 - 6	6 - 7	5 - 7
	5.125x9.625	10 - 3	7 - 10	6 - 7	10 - 3	7 - 10	6 - 7	10 - 3	7 - 10	6 - 7	9 - 11	7 - 8	6 - 6
	5.125x11.000	11 - 9	8 - 11	7 - 6	11 - 9	8 - 11	7 - 6	11 - 9	8 - 11	7 - 6	11 - 4	8 - 9	7 - 5
	5.125x12.375	13 - 2	10 - 1	8 - 5	13 - 2	10 - 1	8 - 5	13 - 2	10 - 1	8 - 5	12 - 9	9 - 10	8 - 4
	5.125x13.750	14 - 8	11 - 2	9 - 5	14 - 8	11 - 2	9 - 5	14 - 8	11 - 2	9 - 5	14 - 2	11 - 0	9 - 3
	5.125x15.125	16 - 2	12 - 4	10 - 4	16 - 2	12 - 4	10 - 4	16 - 2	12 - 4	10 - 4	15 - 7	12 - 1	10 - 2
	5.125x16.500	17 - 6	13 - 5	11 - 3	17 - 6	13 - 5	11 - 3	17 - 6	13 - 5	11 - 3	16 - 11	13 - 2	11 - 1
	5.125x17.875	18 - 9	14 - 6	12 - 2	18 - 9	14 - 6	12 - 2	18 - 9	14 - 6	12 - 2	18 - 2	14 - 3	12 - 0
	5.125x19.250	20-0†	15 - 6	13 - 2	20-0†	15 - 6	13 - 2	20-0†	15 - 6	13 - 2	19 - 6	15 - 3	12 - 11
	5.125x20.625	20-0†	16 - 6	14 - 0	20-0†	16 - 6	14 - 0	20-0†	16 - 6	14 - 0	20-0†	16 - 2	13 - 9
	5.125x22.000	20-0†	17 - 6	14 - 10	20-0†	17 - 6	14 - 10	20-0†	17 - 6	14 - 10	20-0†	17 - 2	14 - 7
	5.125x23.375	20-0†	18 - 6	15 - 8	20-0†	18 - 6	15 - 8	20-0†	18 - 6	15 - 8	20-0†	18 - 2	15 - 5
	5.125x24.750	20-0†	19 - 6	16 - 6	20-0†	19 - 6	16 - 6	20-0†	19 - 6	16 - 6	20-0†	19 - 1	16 - 3

† Spans are limited to 20 feet in length.

1 Tabulated spans are based on the lowest F_b, F_v, and E for #2 Grade Douglas Fir-Larch, Hem-Fir, Southern Pine, and Spruce-Pine-Fir. For #3 Grade lumber, spans shall be multiplied by 0.75.

2 Tabulated spans assume 20F combination glulam with a minimum F_{bx}=2,000psi, F_{vx}=210psi, and E=1,500,000psi.

3 The number of jack studs required at each end of the header shall be determined from Table 3.22F.

4 Spans checked for live load deflection only.

Copyright © American Wood Council. Downloaded/printed pursuant to License Agreement. No reproduction or transfer authorized.

Table 3.22F Jack Stud Requirements for Headers in Exterior Loadbearing Walls

		Roof Live Load				Ground Snow Load											
		20 psf				30 psf				50 psf				70 psf			
		Header Width															
		3" (2-2x)	4.5" (3-2x)	5"	6" (4-2x)	3" (2-2x)	4.5" (3-2x)	5"	6" (4-2x)	3" (2-2x)	4.5" (3-2x)	5"	6" (4-2x)	3" (2-2x)	4.5" (3-2x)	5"	6" (4-2x)
Header Supporting	Header Span (ft)	Number of Jack Studs Required at Each End of the Header[1,2,3]															
Roof and Ceiling	2	1	1	1	1	1	1	1	1	1	1	1	1	1	1	1	1
	4	1	1	1	1	1	1	1	1	2	1	1	1	2	2	1	1
	6	2	1	1	1	2	1	1	1	2	2	2	1	3	2	2	2
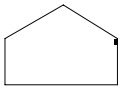	8	2	2	2	1	2	2	2	1	3	2	2	2	4	3	2	2
	10	3	2	2	2	3	2	2	2	4	3	2	2	5	3	3	3
	12	3	2	2	2	3	2	2	2	4	3	3	2	5	4	3	3
	14	4	3	2	2	4	3	2	2	5	4	3	3	6	4	4	3
	16	4	3	3	2	4	3	3	2	6	4	4	3	7	5	4	4
	18	4	3	3	2	5	3	3	3	6	4	4	3	8	5	5	4
	20	5	3	3	3	5	4	3	3	7	5	4	4	9	6	5	5
Roof, Ceiling, and One Center Bearing Floor	2	1	1	1	1	1	1	1	1	1	1	1	1	1	1	1	1
	4	2	1	1	1	2	1	1	1	2	2	1	1	2	2	2	1
	6	2	2	2	1	3	2	2	2	3	2	2	2	3	2	2	2
	8	3	2	2	2	3	2	2	2	4	3	2	2	4	3	3	2
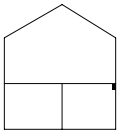	10	4	3	2	2	4	3	3	2	5	3	3	3	5	4	3	3
	12	4	3	3	2	5	3	3	3	5	4	3	3	6	4	4	3
	14	5	4	3	3	5	4	3	3	6	4	4	3	7	5	4	4
	16	6	4	4	3	6	4	4	3	7	5	4	4	8	5	5	4
	18	6	4	4	3	7	5	4	4	8	5	5	4	9	6	6	5
	20	7	5	4	4	7	5	5	4	9	6	5	5	10	7	6	5
Roof, Ceiling, and One Clear Span Floor	2	1	1	1	1	1	1	1	1	2	1	1	1	2	1	1	1
	4	2	2	2	1	2	2	2	1	3	2	2	2	3	2	2	2
	6	3	2	2	2	3	2	2	2	4	3	2	2	4	3	3	2
	8	4	3	3	2	4	3	3	2	5	3	3	3	5	4	3	3
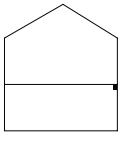	10	5	3	3	3	5	3	3	3	6	4	4	3	6	4	4	3
	12	6	4	4	3	6	4	4	3	7	5	4	4	7	5	5	4
	14	6	4	4	3	7	5	4	4	8	5	5	4	8	6	5	4
	16	7	5	5	4	7	5	5	4	9	6	5	5	10	7	6	5
	18	8	6	5	4	8	6	5	4	10	7	6	5	11	7	7	6
	20	9	6	6	5	9	6	6	5	11	7	7	6	12	8	7	6
Roof, Ceiling, and Two Center Bearing Floors	2	1	1	1	1	1	1	1	1	2	1	1	1	2	1	1	1
	4	2	2	2	1	2	2	2	1	3	2	2	2	3	2	2	2
	6	3	2	2	2	3	2	2	2	4	3	2	2	4	3	3	2
	8	4	3	3	2	4	3	3	2	5	3	3	3	5	4	3	3
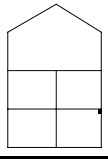	10	5	4	3	3	5	4	3	3	6	4	4	3	6	4	4	3
	12	6	4	4	3	6	4	4	3	7	5	4	4	8	5	5	4
	14	7	5	4	4	7	5	4	4	8	5	5	4	9	6	6	5
	16	8	5	5	4	8	6	5	4	9	6	6	5	10	7	6	5
	18	9	6	5	5	9	6	6	5	10	7	6	5	11	8	7	6
	20	10	7	6	5	10	7	6	5	11	8	7	6	12	8	8	6
Roof, Ceiling, and Two Clear Span Floors	2	2	1	1	1	2	1	1	1	2	1	1	1	2	2	1	1
	4	3	2	2	2	3	2	2	2	3	2	2	2	4	3	2	2
	6	5	3	3	3	5	3	3	3	5	3	3	3	5	4	3	3
	8	6	4	4	3	6	4	4	3	6	4	4	3	7	5	4	4
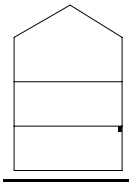	10	7	5	5	4	7	5	5	4	8	5	5	4	8	6	5	4
	12	9	6	5	5	9	6	5	5	9	6	6	5	10	7	6	5
	14	10	7	6	5	10	7	6	5	11	7	7	6	12	8	7	6
	16	11	8	7	6	11	8	7	6	12	8	8	6	13	9	8	7
	18	13	9	8	7	13	9	8	7	14	9	8	7	15	10	9	8
	20	14	9	9	7	14	9	9	7	15	10	9	8	16	11	10	8

1 Jack stud requirements are based on a roof span (W) of 36 feet. For other roof spans, the tabulated number of jack studs required at each end of the header shall be multiplied by (W + 12)/48.

2 Where the number of jack studs equals 1, the header shall be permitted to be supported by a framing anchor attached to the full-height wall stud.

3 An equivalent number of full height studs are permitted to replace jack studs, when adequate gravity connections are provided.

Copyright © American Wood Council. Downloaded/printed pursuant to License Agreement. No reproduction or transfer authorized.
AMERICAN WOOD COUNCIL

Table 3.23A Laterally Unsupported (Dropped) Header Spans for Exterior Loadbearing Walls Resisting Wind Loads

Exposure B Dropped

Wind Speed 3-second gust (mph) (See Figure 1.1)	90	95	100	105	110	115	120	130	140	150	160	170	180	195
Size	**Maximum Header/Girder Spans (ft-in.) for Common Lumber Species[1,2,3,5]**													
1-2x6	6 - 11	6 - 6	6 - 3	5 - 11	5 - 8	5 - 5	5 - 2	4 - 9	4 - 5	4 - 2	3 - 11	3 - 8	3 - 5	3 - 2
1-2x8	7 - 7	7 - 3	6 - 10	6 - 6	6 - 3	6 - 0	5 - 9	5 - 3	4 - 11	4 - 7	4 - 3	4 - 0	3 - 10	3 - 6
1-2x10	8 - 2	7 - 9	7 - 4	7 - 0	6 - 8	6 - 5	6 - 2	5 - 8	5 - 3	4 - 11	4 - 7	4 - 4	4 - 1	3 - 9
1-2x12	8 - 9	8 - 3	7 - 10	7 - 6	7 - 2	6 - 10	6 - 7	6 - 1	5 - 7	5 - 3	4 - 11	4 - 7	4 - 4	4 - 0
2-2x4	8 - 0	7 - 7	7 - 2	6 - 10	6 - 6	6 - 3	6 - 0	5 - 6	5 - 2	4 - 9	4 - 6	4 - 3	4 - 0	3 - 8
2-2x6	9 - 9	9 - 3	8 - 9	8 - 4	8 - 0	7 - 8	7 - 4	6 - 9	6 - 3	5 - 10	5 - 6	5 - 2	4 - 11	4 - 6
2-2x8	10 - 9	10 - 3	9 - 8	9 - 3	8 - 10	8 - 5	8 - 1	7 - 6	6 - 11	6 - 6	6 - 1	5 - 8	5 - 5	5 - 0
2-2x10	11 - 7	11 - 0	10 - 5	9 - 11	9 - 6	9 - 1	8 - 8	8 - 0	7 - 5	6 - 11	6 - 6	6 - 1	5 - 9	5 - 4
2-2x12	12 - 4	11 - 8	11 - 1	10 - 7	10 - 1	9 - 8	9 - 3	8 - 7	7 - 11	7 - 5	6 - 11	6 - 6	6 - 2	5 - 8
3-2x8	13 - 2	12 - 6	11 - 11	11 - 4	10 - 10	10 - 4	9 - 11	9 - 2	8 - 6	7 - 11	7 - 5	7 - 0	6 - 7	6 - 1
3-2x10	14 - 2	13 - 5	12 - 9	12 - 2	11 - 7	11 - 1	10 - 7	9 - 10	9 - 1	8 - 6	8 - 0	7 - 6	7 - 1	6 - 6
3-2x12	15 - 1	14 - 4	13 - 7	13 - 0	12 - 4	11 - 10	11 - 4	10 - 6	9 - 9	9 - 1	8 - 6	8 - 0	7 - 7	7 - 0
4-2x8	15 - 3	14 - 5	13 - 9	13 - 1	12 - 6	11 - 11	11 - 5	10 - 7	9 - 10	9 - 2	8 - 7	8 - 1	7 - 7	7 - 0
4-2x10	16 - 4	15 - 6	14 - 9	14 - 0	13 - 5	12 - 10	12 - 3	11 - 4	10 - 6	9 - 10	9 - 2	8 - 8	8 - 2	7 - 7
4-2x12	17 - 6	16 - 7	15 - 9	15 - 0	14 - 3	13 - 8	13 - 1	12 - 1	11 - 3	10 - 6	9 - 10	9 - 3	8 - 9	8 - 1
Size	**Maximum Header/Girder Spans (ft-in.) for Glued Laminated Timber Beams[1,2,4,5]**													
3.125x5.500	12 - 11	12 - 3	11 - 7	11 - 1	10 - 7	10 - 1	9 - 8	8 - 11	8 - 4	7 - 9	7 - 3	6 - 10	6 - 5	6 - 0
3.125x6.875	14 - 5	13 - 8	13 - 0	12 - 5	11 - 10	11 - 4	10 - 10	10 - 0	9 - 3	8 - 8	8 - 1	7 - 8	7 - 3	6 - 8
3.125x8.250	15 - 10	15 - 0	14 - 3	13 - 7	12 - 11	12 - 5	11 - 10	11 - 0	10 - 2	9 - 6	8 - 11	8 - 4	7 - 11	7 - 4
3.125x9.625	17 - 1	16 - 2	15 - 5	14 - 8	14 - 0	13 - 4	12 - 10	11 - 10	11 - 0	10 - 3	9 - 7	9 - 1	8 - 7	7 - 11
3.125x11.000	18 - 3	17 - 4	16 - 5	15 - 8	14 - 11	14 - 4	13 - 8	12 - 8	11 - 9	11 - 0	10 - 3	9 - 8	9 - 2	8 - 5
3.125x12.375	19 - 4	18 - 4	17 - 5	16 - 7	15 - 10	15 - 2	14 - 6	13 - 5	12 - 5	11 - 7	10 - 11	10 - 3	9 - 8	8 - 11
3.125x13.750	20-0†	19 - 4	18 - 5	17 - 6	16 - 8	16 - 0	15 - 4	14 - 2	13 - 2	12 - 3	11 - 6	10 - 10	10 - 3	9 - 5
3.125x15.125	20-0†	20-0†	19 - 3	18 - 4	17 - 6	16 - 9	16 - 1	14 - 10	13 - 9	12 - 10	12 - 1	11 - 4	10 - 9	9 - 11
3.125x16.500	20-0†	20-0†	20-0†	19 - 2	18 - 4	17 - 6	16 - 9	15 - 6	14 - 5	13 - 5	12 - 7	11 - 10	11 - 2	10 - 4
3.125x17.875	20-0†	20-0†	20-0†	20 - 0	19 - 1	18 - 3	17 - 6	16 - 1	15 - 0	14 - 0	13 - 1	12 - 4	11 - 8	10 - 9
3.125x19.250	20-0†	20-0†	20-0†	20-0†	19 - 9	18 - 11	18 - 1	16 - 9	15 - 6	14 - 6	13 - 7	12 - 10	12 - 1	11 - 2
3.125x20.625	20-0†	20-0†	20-0†	20-0†	20-0†	19 - 7	18 - 9	17 - 4	16 - 1	15 - 0	14 - 1	13 - 3	12 - 6	11 - 7
3.125x22.000	20-0†	20-0†	20-0†	20-0†	20-0†	20-0†	19 - 4	17 - 11	16 - 7	15 - 6	14 - 6	13 - 8	12 - 11	11 - 11
3.125x23.375	20-0†	20-0†	20-0†	20-0†	20-0†	20-0†	20 - 0	18 - 5	17 - 1	16 - 0	15 - 0	14 - 1	13 - 4	12 - 3
3.125x24.750	20-0†	20-0†	20-0†	20-0†	20-0†	20-0†	20-0†	19 - 0	17 - 7	16 - 5	15 - 5	14 - 6	13 - 8	12 - 8
5.125x5.500	20-0†	19 - 6	18 - 7	17 - 8	16 - 11	16 - 2	15 - 6	14 - 3	13 - 3	12 - 5	11 - 7	10 - 11	10 - 4	9 - 6
5.125x6.875	20-0†	20-0†	20-0†	19 - 9	18 - 10	18 - 1	17 - 4	16 - 0	14 - 10	13 - 10	13 - 0	12 - 3	11 - 6	10 - 8
5.125x8.250	20-0†	20-0†	20-0†	20-0†	20-0†	19 - 9	18 - 11	17 - 6	16 - 3	15 - 2	14 - 3	13 - 4	12 - 8	11 - 8
5.125x9.625	20-0†	20-0†	20-0†	20-0†	20-0†	20-0†	20-0†	18 - 11	17 - 6	16 - 4	15 - 4	14 - 5	13 - 8	12 - 7
5.125x11.000	20-0†	20-0†	20-0†	20-0†	20-0†	20-0†	20-0†	20-0†	18 - 9	17 - 6	16 - 5	15 - 5	14 - 7	13 - 6
5.125x12.375	20-0†	20-0†	20-0†	20-0†	20-0†	20-0†	20-0†	20-0†	19 - 11	18 - 7	17 - 5	16 - 5	15 - 6	14 - 3
5.125x13.750	20-0†	20-0†	20-0†	20-0†	20-0†	20-0†	20-0†	20-0†	20-0†	19 - 7	18 - 4	17 - 3	16 - 4	15 - 1
5.125x15.125	20-0†	20-0†	20-0†	20-0†	20-0†	20-0†	20-0†	20-0†	20-0†	20-0†	19 - 3	18 - 1	17 - 1	15 - 9
5.125x16.500	20-0†	20-0†	20-0†	20-0†	20-0†	20-0†	20-0†	20-0†	20-0†	20-0†	20-0†	18 - 11	17 - 10	16 - 6
5.125x17.875	20-0†	20-0†	20-0†	20-0†	20-0†	20-0†	20-0†	20-0†	20-0†	20-0†	20-0†	19 - 8	18 - 7	17 - 2
5.125x19.250	20-0†	20-0†	20-0†	20-0†	20-0†	20-0†	20-0†	20-0†	20-0†	20-0†	20-0†	20-0†	19 - 4	17 - 10
5.125x20.625	20-0†	20-0†	20-0†	20-0†	20-0†	20-0†	20-0†	20-0†	20-0†	20-0†	20-0†	20-0†	20 - 0	18 - 5
5.125x22.000	20-0†	20-0†	20-0†	20-0†	20-0†	20-0†	20-0†	20-0†	20-0†	20-0†	20-0†	20-0†	20-0†	19 - 0
5.125x23.375	20-0†	20-0†	20-0†	20-0†	20-0†	20-0†	20-0†	20-0†	20-0†	20-0†	20-0†	20-0†	20-0†	19 - 8
5.125x24.750	20-0†	20-0†	20-0†	20-0†	20-0†	20-0†	20-0†	20-0†	20-0†	20-0†	20-0†	20-0†	20-0†	20-0†

† Spans are limited to 20 feet in length.

1 Tabulated header spans shall be permitted to be divided by 0.96, for framing not located within 8 feet of building corners.

2 The number of jack studs required at each end of the header shall be determined from Table 3.22F.

3 Tabulated spans are based on the lowest F_b, F_v, and E for #2 Grade Douglas Fir-Larch, Hem-Fir, Southern PIne, and Spruce-Pine-Fir.

4 Tabulated spans assume 20F combination glulam with a minimum F_{by} = 800 psi.

5 The number of full height studs required at each end of the header shall be determined in accordance with Table 3.23C.

Copyright © American Wood Council. Downloaded/printed pursuant to License Agreement. No reproduction or transfer authorized.
AMERICAN WOOD COUNCIL

Table 3.23A Laterally Unsupported (Dropped) Header Spans for Exterior Loadbearing Walls Resisting Wind Loads

Exposure C Dropped

Wind Speed 3-second gust (mph) (See Figure 1.1)	90	95	100	105	110	115	120	130	140	150	160	170	180	195
Size	**Maximum Header/Girder Spans (ft-in.) for Common Lumber Species[1,2,3,5]**													
1-2x6	5 - 10	5 - 7	5 - 3	5 - 0	4 - 9	4 - 7	4 - 5	4 - 1	3 - 9	3 - 6	3 - 4	3 - 1	2 - 11	2 - 8
1-2x8	6 - 6	6 - 2	5 - 10	5 - 7	5 - 3	5 - 1	4 - 10	4 - 6	4 - 2	3 - 11	3 - 8	3 - 5	3 - 3	3 - 0
1-2x10	6 - 11	6 - 7	6 - 3	5 - 11	5 - 8	5 - 5	5 - 2	4 - 10	4 - 6	4 - 2	3 - 11	3 - 8	3 - 6	3 - 2
1-2x12	7 - 5	7 - 0	6 - 8	6 - 4	6 - 1	5 - 10	5 - 7	5 - 2	4 - 9	4 - 5	4 - 2	3 - 11	3 - 8	3 - 5
2-2x4	6 - 9	6 - 5	6 - 1	5 - 10	5 - 7	5 - 4	5 - 1	4 - 8	4 - 4	4 - 1	3 - 10	3 - 7	3 - 5	3 - 2
2-2x6	8 - 3	7 - 10	7 - 5	7 - 1	6 - 9	6 - 6	6 - 3	5 - 9	5 - 4	5 - 0	4 - 8	4 - 5	4 - 2	3 - 10
2-2x8	9 - 2	8 - 8	8 - 3	7 - 10	7 - 6	7 - 2	6 - 10	6 - 4	5 - 11	5 - 6	5 - 2	4 - 10	4 - 7	4 - 3
2-2x10	9 - 10	9 - 4	8 - 10	8 - 5	8 - 0	7 - 8	7 - 4	6 - 10	6 - 4	5 - 11	5 - 6	5 - 2	4 - 11	4 - 6
2-2x12	10 - 6	9 - 11	9 - 5	9 - 0	8 - 7	8 - 2	7 - 10	7 - 3	6 - 9	6 - 3	5 - 11	5 - 7	5 - 3	4 - 10
3-2x8	11 - 2	10 - 7	10 - 1	9 - 7	9 - 2	8 - 9	8 - 5	7 - 9	7 - 2	6 - 9	6 - 4	5 - 11	5 - 7	5 - 2
3-2x10	12 - 0	11 - 5	10 - 10	10 - 4	9 - 10	9 - 5	9 - 0	8 - 4	7 - 9	7 - 3	6 - 9	6 - 4	6 - 0	5 - 7
3-2x12	12 - 10	12 - 2	11 - 7	11 - 0	10 - 6	10 - 1	9 - 7	8 - 11	8 - 3	7 - 8	7 - 3	6 - 10	6 - 5	5 - 11
4-2x8	12 - 11	12 - 3	11 - 8	11 - 1	10 - 7	10 - 1	9 - 8	9 - 0	8 - 4	7 - 9	7 - 3	6 - 10	6 - 6	6 - 0
4-2x10	13 - 11	13 - 2	12 - 6	11 - 11	11 - 4	10 - 10	10 - 5	9 - 7	8 - 11	8 - 4	7 - 10	7 - 4	6 - 11	6 - 5
4-2x12	14 - 10	14 - 0	13 - 4	12 - 8	12 - 1	11 - 7	11 - 1	10 - 3	9 - 6	8 - 11	8 - 4	7 - 10	7 - 5	6 - 10
Size	**Maximum Header/Girder Spans (ft-in.) for Glued Laminated Timber Beams[1,2,4,5]**													
3.125x5.500	11 - 0	10 - 5	9 - 10	9 - 5	9 - 0	8 - 7	8 - 3	7 - 7	7 - 1	6 - 7	6 - 2	5 - 10	5 - 6	5 - 1
3.125x6.875	12 - 3	11 - 7	11 - 0	10 - 6	10 - 0	9 - 7	9 - 2	8 - 6	7 - 11	7 - 4	6 - 11	6 - 6	6 - 2	5 - 8
3.125x8.250	13 - 5	12 - 9	12 - 1	11 - 6	11 - 0	10 - 6	10 - 1	9 - 4	8 - 8	8 - 1	7 - 7	7 - 1	6 - 9	6 - 2
3.125x9.625	14 - 6	13 - 9	13 - 1	12 - 5	11 - 10	11 - 4	10 - 10	10 - 0	9 - 4	8 - 8	8 - 2	7 - 8	7 - 3	6 - 8
3.125x11.000	15 - 6	14 - 8	13 - 11	13 - 3	12 - 8	12 - 2	11 - 7	10 - 9	10 - 0	9 - 4	8 - 9	8 - 2	7 - 9	7 - 2
3.125x12.375	16 - 5	15 - 7	14 - 10	14 - 1	13 - 5	12 - 10	12 - 4	11 - 5	10 - 7	9 - 10	9 - 3	8 - 8	8 - 3	7 - 7
3.125x13.750	17 - 4	16 - 5	15 - 7	14 - 10	14 - 2	13 - 7	13 - 0	12 - 0	11 - 2	10 - 5	9 - 9	9 - 2	8 - 8	8 - 0
3.125x15.125	18 - 2	17 - 3	16 - 4	15 - 7	14 - 10	14 - 3	13 - 8	12 - 7	11 - 8	10 - 11	10 - 3	9 - 7	9 - 1	8 - 5
3.125x16.500	19 - 0	18 - 0	17 - 1	16 - 3	15 - 6	14 - 10	14 - 3	13 - 2	12 - 2	11 - 5	10 - 8	10 - 1	9 - 6	8 - 9
3.125x17.875	19 - 9	18 - 9	17 - 9	16 - 11	16 - 2	15 - 6	14 - 10	13 - 8	12 - 8	11 - 10	11 - 1	10 - 6	9 - 11	9 - 1
3.125x19.250	20-0†	19 - 5	18 - 5	17 - 7	16 - 9	16 - 1	15 - 5	14 - 2	13 - 2	12 - 4	11 - 6	10 - 10	10 - 3	9 - 6
3.125x20.625	20-0†	20-0†	19 - 1	18 - 2	17 - 4	16 - 7	15 - 11	14 - 8	13 - 8	12 - 9	11 - 11	11 - 3	10 - 7	9 - 10
3.125x22.000	20-0†	20-0†	19 - 9	18 - 9	17 - 11	17 - 2	16 - 5	15 - 2	14 - 1	13 - 2	12 - 4	11 - 7	11 - 0	10 - 1
3.125x23.375	20-0†	20-0†	20-0†	19 - 4	18 - 6	17 - 8	16 - 11	15 - 8	14 - 6	13 - 7	12 - 8	12 - 0	11 - 4	10 - 5
3.125x24.750	20-0†	20-0†	20-0†	19 - 11	19 - 0	18 - 2	17 - 5	16 - 1	14 - 11	13 - 11	13 - 1	12 - 4	11 - 7	10 - 9
5.125x5.500	17 - 6	16 - 7	15 - 9	15 - 0	14 - 4	13 - 8	13 - 2	12 - 1	11 - 3	10 - 6	9 - 10	9 - 3	8 - 9	8 - 1
5.125x6.875	19 - 7	18 - 6	17 - 7	16 - 9	16 - 0	15 - 4	14 - 8	13 - 7	12 - 7	11 - 9	11 - 0	10 - 4	9 - 9	9 - 0
5.125x8.250	20-0†	20-0†	19 - 4	18 - 4	17 - 6	16 - 9	16 - 1	14 - 10	13 - 9	12 - 10	12 - 1	11 - 4	10 - 9	9 - 11
5.125x9.625	20-0†	20-0†	20-0†	19 - 10	18 - 11	18 - 1	17 - 4	16 - 0	14 - 11	13 - 11	13 - 0	12 - 3	11 - 7	10 - 8
5.125x11.000	20-0†	20-0†	20-0†	20-0†	20-0†	19 - 4	18 - 7	17 - 2	15 - 11	14 - 10	13 - 11	13 - 1	12 - 5	11 - 5
5.125x12.375	20-0†	20-0†	20-0†	20-0†	20-0†	20-0†	19 - 8	18 - 2	16 - 11	15 - 9	14 - 9	13 - 11	13 - 2	12 - 1
5.125x13.750	20-0†	20-0†	20-0†	20-0†	20-0†	20-0†	20-0†	19 - 2	17 - 9	16 - 7	15 - 7	14 - 8	13 - 10	12 - 9
5.125x15.125	20-0†	20-0†	20-0†	20-0†	20-0†	20-0†	20-0†	20-0†	18 - 8	17 - 5	16 - 4	15 - 4	14 - 6	13 - 5
5.125x16.500	20-0†	20-0†	20-0†	20-0†	20-0†	20-0†	20-0†	20-0†	19 - 6	18 - 2	17 - 1	16 - 1	15 - 2	14 - 0
5.125x17.875	20-0†	20-0†	20-0†	20-0†	20-0†	20-0†	20-0†	20-0†	20-0†	18 - 11	17 - 9	16 - 8	15 - 9	14 - 7
5.125x19.250	20-0†	20-0†	20-0†	20-0†	20-0†	20-0†	20-0†	20-0†	20-0†	19 - 8	18 - 5	17 - 4	16 - 4	15 - 1
5.125x20.625	20-0†	20-0†	20-0†	20-0†	20-0†	20-0†	20-0†	20-0†	20-0†	20-0†	19 - 1	17 - 11	16 - 11	15 - 8
5.125x22.000	20-0†	20-0†	20-0†	20-0†	20-0†	20-0†	20-0†	20-0†	20-0†	20-0†	19 - 8	18 - 6	17 - 6	16 - 2
5.125x23.375	20-0†	20-0†	20-0†	20-0†	20-0†	20-0†	20-0†	20-0†	20-0†	20-0†	20-0†	19 - 1	18 - 0	16 - 8
5.125x24.750	20-0†	20-0†	20-0†	20-0†	20-0†	20-0†	20-0†	20-0†	20-0†	20-0†	20-0†	19 - 8	18 - 7	17 - 2

† Spans are limited to 20 feet in length.

1 Tabulated header spans shall be permitted to be divided by 0.96, for framing not located within 8 feet of building corners.

2 The number of jack studs required at each end of the header shall be determined from Table 3.22F.

3 Tabulated spans are based on the lowest F_b, F_v, and E for #2 Grade Douglas Fir-Larch, Hem-Fir, Southern PIne, and Spruce-Pine-Fir.

4 Tabulated spans assume 20F combination glulam with a minimum F_{by} = 800 psi.

5 The number of full height studs required at each end of the header shall be determined in accordance with Table 3.23C.

Copyright © American Wood Council. Downloaded/printed pursuant to License Agreement. No reproduction or transfer authorized.
AMERICAN WOOD COUNCIL

Table 3.23B Laterally Unsupported (Dropped) Header Spans for Exterior Non-Loadbearing Walls and Window Sill Plate Spans Resisting Wind Loads — Exposure B

Wind Speed 3-second gust (mph) (See Figure 1.1)	90	95	100	105	110	115	120	130	140	150	160	170	180	195
	Maximum Header/Girder Spans for Common Lumber Species[1,2,3,4]													
Size	(ft-in.)	(ft-in.)	(ft-in.)	(ft-in.)	(ft-in.)	(ft-in.)	(ft-in.)	(ft-in.)	(ft-in.)	(ft-in.)	(ft-in.)	(ft-in.)	(ft-in.)	(ft-in.)
1-2x4 (flat)	8 - 3	7 - 9	7 - 5	7 - 1	6 - 9	6 - 5	6 - 2	5 - 8	5 - 3	4 - 11	4 - 8	4 - 4	4 - 1	3 - 10
1-2x6 (flat)	12 - 4	11 - 8	11 - 1	10 - 7	10 - 1	9 - 8	9 - 3	8 - 6	7 - 11	7 - 5	6 - 11	6 - 6	6 - 2	5 - 8
2-2x4 (flat)	12 - 2	11 - 7	11 - 0	10 - 5	10 - 0	9 - 7	9 - 2	8 - 5	7 - 10	7 - 4	6 - 10	6 - 5	6 - 1	5 - 8
2-2x6 (flat)	16 - 0*	16 - 0*	16 - 0*	15 - 8	15 - 0	14 - 4	13 - 8	12 - 8	11 - 9	11 - 0	10 - 3	9 - 8	9 - 2	8 - 5

1 Tabulated header spans shall be permitted to be divided by 0.96, for framing not located within 8 feet of building corners.

2 Tabulated header spans are based on 10 foot wall heights. For other wall heights, H, the tabulated header spans shall be divided by $(H/10)^{1/2}$.

3 Tabulated spans are based on the lowest F_b, F_v, and E for #2 Grade Douglas Fir-Larch, Hem-Fir, Southern PInе, and Spruce-Pine-Fir.

4 The number of full height studs required at each end of the header shall be determined in accordance with Table 3.23C.

* Maximum span limited to 16 ft.

Table 3.23B Laterally Unsupported (Dropped) Header Spans for Exterior Non-Loadbearing Walls and Window Sill Plate Spans Resisting Wind Loads — Exposure C

Wind Speed 3-second gust (mph) (See Figure 1.1)	90	95	100	105	110	115	120	130	140	150	160	170	180	195
	Maximum Header/Girder Spans for Common Lumber Species[1,2,3,4]													
Size	(ft-in.)	(ft-in.)	(ft-in.)	(ft-in.)	(ft-in.)	(ft-in.)	(ft-in.)	(ft-in.)	(ft-in.)	(ft-in.)	(ft-in.)	(ft-in.)	(ft-in.)	(ft-in.)
1-2x4 (flat)	7 - 0	6 - 7	6 - 3	6 - 0	5 - 9	5 - 6	5 - 3	4 - 10	4 - 6	4 - 2	3 - 11	3 - 8	3 - 6	3 - 3
1-2x6 (flat)	10 - 5	9 - 11	9 - 5	9 - 0	8 - 7	8 - 2	7 - 10	7 - 3	6 - 9	6 - 3	5 - 11	5 - 6	5 - 3	4 - 10
2-2x4 (flat)	10 - 4	9 - 10	9 - 4	8 - 10	8 - 6	8 - 1	7 - 9	7 - 2	6 - 8	6 - 3	5 - 10	5 - 6	5 - 2	4 - 9
2-2x6 (flat)	15 - 6	14 - 8	14 - 0	13 - 4	12 - 8	12 - 2	11 - 8	10 - 9	10 - 0	9 - 4	8 - 9	8 - 3	7 - 9	7 - 2

1 Tabulated header spans shall be permitted to be divided by 0.96, for framing not located within 8 feet of building corners.

2 Tabulated header spans are based on 10 foot wall heights. For other wall heights, H, the tabulated header spans shall be divided by $(H/10)^{1/2}$.

3 Tabulated spans are based on the lowest F_b, F_v, and E for #2 Grade Douglas Fir-Larch, Hem-Fir, Southern PInе, and Spruce-Pine-Fir.

4 The number of full height studs required at each end of the header shall be determined in accordance with Table 3.23C.

Copyright © American Wood Council. Downloaded/printed pursuant to License Agreement. No reproduction or transfer authorized.

Table 3.23C Full Height Stud Requirements for Headers or Window Sill Plates in Exterior Walls Resisting Wind Loads

Exposures B & C

Header Span (ft)	Wall Stud Spacing (in.)		
	12	16	24
	Number of Full Height Stud Required at Each End of the Header[1]		
2	1	1	1
4	2	2	1
6	3	3	2
8	4	3	2
10	5	4	3
12	6	5	3
14	7	6	4
16	8	6	4
18	9	7	5
20	10	8	5

1 The number of full height studs required at each end of the header shall be permitted to be reduced in accordance with the requirements of Section 3.4.1.4.2 and Table 3.23D.

Copyright © American Wood Council. Downloaded/printed pursuant to License Agreement. No reproduction or transfer authorized.

Table 3.23D Reduced Full Height Stud Requirements for Headers or Window Sill Plates in Exterior Walls Resisting Wind Loads

Exposures B & C

		Distance from Top Plate Down to Header (a) or Distance from Bottom Plate Up to Window Sill Plate (b) to Wall Height (x/h), where x is the larger of a or b										
		0.0	0.1	0.2	0.3	0.4	0.5	0.6	0.7	0.8	0.9	1.0
Wall Stud Spacing (in.)	Header Span (ft)	Number of Full Height Stud Required at Each End of the Header[1]										
12	2	1	1	1	1	1	1	1	1	1	1	1
	4	1	1	2	2	2	2	2	2	2	1	1
	6	1	2	2	3	3	3	3	3	2	2	1
	8	1	2	3	4	4	4	4	4	3	2	1
	10	1	2	4	5	5	5	5	5	4	2	1
	12	1	3	4	6	6	6	6	6	4	3	1
	14	1	3	5	6	7	7	7	6	5	3	1
	16	1	3	6	7	8	8	8	7	6	3	1
	18	1	4	6	8	9	9	9	8	6	4	1
	20	1	4	7	9	10	10	10	9	7	4	1
16	2	1	1	1	1	1	1	1	1	1	1	1
	4	1	1	1	2	2	2	2	2	1	1	1
	6	1	1	2	2	3	3	3	2	2	1	1
	8	1	2	2	3	3	3	3	3	2	2	1
	10	1	2	3	4	4	4	4	4	3	2	1
	12	1	2	3	4	5	5	5	4	3	2	1
	14	1	2	4	5	6	6	6	5	4	2	1
	16	1	3	4	6	6	6	6	6	4	3	1
	18	1	3	5	6	7	7	7	6	5	3	1
	20	1	3	5	7	8	8	8	7	5	3	1
24	2	1	1	1	1	1	1	1	1	1	1	1
	4	1	1	1	1	1	1	1	1	1	1	1
	6	1	1	1	2	2	2	2	2	1	1	1
	8	1	1	2	2	2	2	2	2	2	1	1
	10	1	1	2	3	3	3	3	3	2	1	1
	12	1	2	2	3	3	3	3	3	2	2	1
	14	1	2	3	3	4	4	4	3	3	2	1
	16	1	2	3	4	4	4	4	4	3	2	1
	18	1	2	3	4	5	5	5	4	3	2	1
	20	1	2	4	5	5	5	5	5	4	2	1

1 The capacity of the connection of the top or bottom plate to each full height stud shall be equal to the unit lateral load (w) given on Table 3.5 times half of the header span (L/2) divided by the required number of full height studs (NFH) selected from 3.23D.

Top or Bottom Plate to Each Full Height Stud Connection = w*(L/2)/NFH

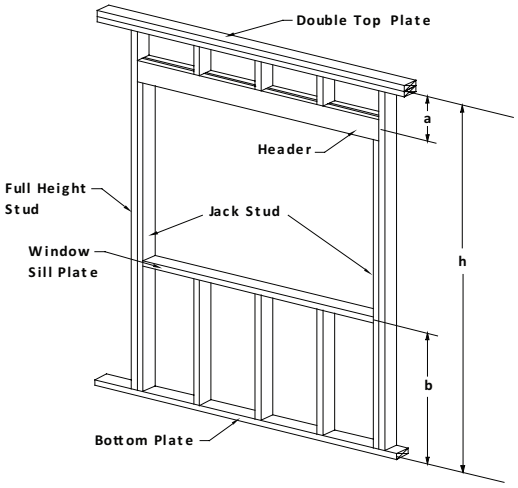

Copyright © American Wood Council. Downloaded/printed pursuant to License Agreement. No reproduction or transfer authorized.

Table 3.24A1 Laterally Unsupported (Dropped) Header Spans for Interior Loadbearing Walls

Dropped Interior

(Supporting One Center Bearing Floor)

Floor Live Load = 40 psf, L/Δ_{LL}=360, Floor Assembly Dead Load = 10 psf

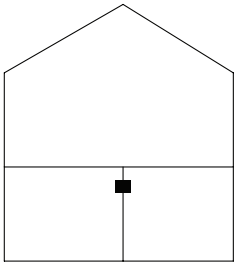

Headers Supporting	Size	Building Width (ft) 12	24	36
		Maximum Header/Girder Spans (ft-in.) for Common Lumber Species[1,3,4,5]		
One Floor Only (Center Bearing)	**1-2x6**	4 - 0	2 - 10	2 - 4
	1-2x8	5 - 0	3 - 7	3 - 0
	1-2x10	5 - 10	4 - 3	3 - 6
	1-2x12	6 - 6	4 - 10	4 - 0
	2-2x4	4 - 0	2 - 10	2 - 4
	2-2x6	5 - 11	4 - 3	3 - 5
	2-2x8	7 - 1	5 - 2	4 - 4
	2-2x10	7 - 11	6 - 0	5 - 0
	2-2x12	8 - 6	6 - 7	5 - 7
	3-2x8	8 - 5	6 - 4	5 - 3
	3-2x10	9 - 3	7 - 1	6 - 0
	3-2x12	9 - 11	7 - 8	6 - 7
	4-2x8	9 - 5	7 - 2	6 - 0
	4-2x10	10 - 3	7 - 11	6 - 9
	4-2x12	11 - 0	8 - 7	7 - 4
	Size	Maximum Header/Girder Spans (ft-in.) for Glued Laminated Timber Beams[2,3,4,5]		
	3.125x5.500	7 - 5	5 - 10	4 - 10
	3.125x6.875	9 - 3	7 - 4	6 - 0
	3.125x8.250	11 - 1	8 - 9	7 - 2
	3.125x9.625	12 - 11	10 - 2	8 - 4
	3.125x11.000	14 - 9	11 - 5	9 - 5
	3.125x12.375	16 - 7	12 - 7	10 - 6
	3.125x13.750	17 - 11	13 - 7	11 - 5
	3.125x15.125	18 - 9	14 - 5	12 - 2
	3.125x16.500	19 - 5	15 - 0	12 - 10
	3.125x17.875	20-0†	15 - 7	13 - 4
	3.125x19.250	20-0†	16 - 0	13 - 9
	3.125x20.625	20-0†	16 - 5	14 - 2
	3.125x22.000	20-0†	16 - 9	14 - 6
	3.125x23.375	20-0†	17 - 1	14 - 9
	3.125x24.750	20-0†	17 - 5	15 - 1
	5.125x5.500	8 - 8	6 - 11	6 - 0
	5.125x6.875	10 - 10	8 - 8	7 - 6
	5.125x8.250	13 - 1	10 - 4	9 - 1
	5.125x9.625	15 - 3	12 - 1	10 - 7
	5.125x11.000	17 - 5	13 - 10	12 - 1
	5.125x12.375	19 - 7	15 - 6	13 - 7
	5.125x13.750	20-0†	17 - 3	15 - 1
	5.125x15.125	20-0†	19 - 0	16 - 7
	5.125x16.5	20-0†	20-0†	18 - 1
	5.125x17.875	20-0†	20-0†	19 - 5

† Spans are limited to 20 feet in length.
1 Tabulated spans are based on the lowest F_b, F_v, and E for #2 Grade Douglas Fir-Larch, Hem-Fir, Southern Pine, and Spruce-Pine-Fir. For #3 Grade lumber, spans shall be multiplied by 0.75.
2 Tabulated spans assume 20F combination glulam with a minimum F_{bx}=2,000psi, F_{vx}=210psi, and E=1,500,000psi.
3 Tabulated spans assume headers supporting single span floor joists. For headers supporting continuous two span floor joists, tabulated spans shall be multiplied by 0.89.
4 The number of jack studs required at each end of the header shall be determined from Table 3.24C.
5 Spans checked for live load deflection only.

Copyright © American Wood Council. Downloaded/printed pursuant to License Agreement. No reproduction or transfer authorized.

Table 3.24A2 Laterally Supported (Raised) Header Spans for Interior Loadbearing Walls

Raised Interior

(Supporting One Center Bearing Floor)

Floor Live Load = 40 psf, L/Δ_{LL}=360, Floor Assembly Dead Load = 10 psf

Headers Supporting	Size	Building Width (ft) 12	24	36
		Maximum Header/Girder Spans (ft-in.) for Common Lumber Species[1,3,4,5]		
One Floor Only (Center Bearing)	1-2x6	4 - 1	2 - 11	2 - 4
	1-2x8	5 - 2	3 - 8	3 - 0
	1-2x10	6 - 2	4 - 4	3 - 7
	1-2x12	7 - 3	5 - 2	4 - 2
	2-2x4	4 - 1	2 - 10	2 - 4
	2-2x6	6 - 1	4 - 4	3 - 6
	2-2x8	7 - 9	5 - 5	4 - 5
	2-2x10	9 - 2	6 - 6	5 - 3
	2-2x12	10 - 9	7 - 7	6 - 3
	3-2x8	9 - 8	6 - 10	5 - 7
	3-2x10	11 - 5	8 - 1	6 - 7
	3-2x12	13 - 6	9 - 6	7 - 9
	4-2x8	11 - 2	7 - 11	6 - 5
	4-2x10	13 - 3	9 - 4	7 - 8
	4-2x12	15 - 7	11 - 0	9 - 0
	Size	Maximum Header/Girder Spans (ft-in.) for Glued Laminated Timber Beams[2,3,4,5]		
	3.125x5.500	7 - 5	5 - 10	4 - 10
	3.125x6.875	9 - 3	7 - 4	6 - 0
	3.125x8.250	11 - 1	8 - 9	7 - 3
	3.125x9.625	12 - 11	10 - 3	8 - 5
	3.125x11.000	14 - 9	11 - 8	9 - 8
	3.125x12.375	16 - 7	13 - 2	10 - 10
	3.125x13.750	18 - 5	14 - 8	12 - 1
	3.125x15.125	20-0†	16 - 1	13 - 3
	3.125x16.500	20-0†	17 - 7	14 - 6
	3.125x17.875	20-0†	19 - 0	15 - 8
	3.125x19.250	20-0†	20-0†	16 - 11
	3.125x20.625	20-0†	20-0†	18 - 1
	5.125x5.500	8 - 8	6 - 11	6 - 0
	5.125x6.875	10 - 10	8 - 8	7 - 6
	5.125x8.25	13 - 1	10 - 4	9 - 1
	5.125x9.625	15 - 3	12 - 1	10 - 7
	5.125x11.000	17 - 5	13 - 10	12 - 1
	5.125x12.375	19 - 7	15 - 6	13 - 7
	5.125x13.750	20-0†	17 - 3	15 - 1
	5.125x15.125	20-0†	19 - 0	16 - 7
	5.125x16.500	20-0†	20-0†	18 - 1
	5.125x17.875	20-0†	20-0†	19 - 7

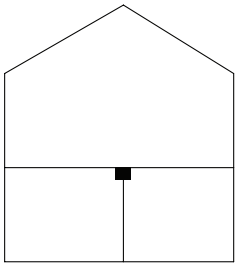

† Spans are limited to 20 feet in length.

1 Tabulated spans are based on the lowest F_b, F_v, and E for #2 Grade Douglas Fir-Larch, Hem-Fir, Southern Pine, and Spruce-Pine-Fir. For #3 Grade lumber, spans shall be multiplied by 0.75.

2 Tabulated spans assume 20F combination glulam with a minimum F_{bx}=2,000psi, F_{vx}=210psi, and E=1,500,000psi.

3 Tabulated spans assume headers supporting single span floor joists. For headers supporting continuous two span floor joists, tabulated spans shall be multiplied by 0.89.

4 The number of jack studs required at each end of the header shall be determined from Table 3.24C.

5 Spans checked for live load deflection only.

Copyright © American Wood Council. Downloaded/printed pursuant to License Agreement. No reproduction or transfer authorized.

Table 3.24B1 Laterally Unsupported (Dropped) Header Spans for Interior Loadbearing Walls

Dropped Interior

(Supporting Two Center Bearing Floors)

Floor Live Load = 40 psf, L/Δ_{LL}=360, Floor Assembly Dead Load = 10 psf

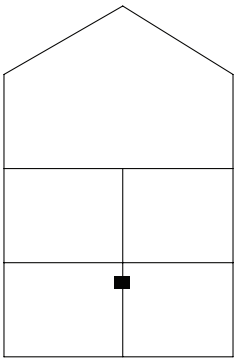

Headers Supporting	Size	Building Width (ft) 12	24	36
		Maximum Header/Girder Spans (ft-in.) for Common Lumber Species[1,3,4,5]		
Two Floors Only (Center Bearing)	1-2x6	2 - 7	1 - 11	1 - 7
	1-2x8	3 - 4	2 - 5	2 - 0
	1-2x10	3 - 10	2 - 11	2 - 5
	1-2x12	4 - 6	3 - 4	2 - 10
	2-2x4	2 - 7	1 - 11	1 - 7
	2-2x6	3 - 10	2 - 10	2 - 5
	2-2x8	4 - 9	3 - 7	3 - 0
	2-2x10	5 - 6	4 - 2	3 - 6
	2-2x12	6 - 1	4 - 9	4 - 1
	3-2x8	5 - 10	4 - 5	3 - 9
	3-2x10	6 - 7	5 - 1	4 - 4
	3-2x12	7 - 2	5 - 8	4 - 11
	4-2x8	6 - 7	5 - 1	4 - 3
	4-2x10	7 - 5	5 - 9	4 - 11
	4-2x12	8 - 0	6 - 4	5 - 6
	Size	Maximum Header/Girder Spans (ft-in.) for Glued Laminated Timber Beams[2,3,4,5]		
	3.125x5.500	5 - 6	4 - 0	3 - 4
	3.125x6.875	6 - 10	5 - 0	4 - 2
	3.125x8.250	8 - 2	6 - 0	5 - 0
	3.125x9.625	9 - 5	6 - 11	5 - 9
	3.125x11.000	10 - 8	7 - 11	6 - 7
	3.125x12.375	11 - 9	8 - 10	7 - 4
	3.125x13.750	12 - 9	9 - 8	8 - 1
	3.125x15.125	13 - 6	10 - 5	8 - 9
	3.125x16.500	14 - 2	11 - 0	9 - 4
	3.125x17.875	14 - 8	11 - 6	9 - 11
	3.125x19.250	15 - 1	12 - 0	10 - 4
	3.125x20.625	15 - 6	12 - 4	10 - 8
	3.125x22.000	15 - 10	12 - 8	11 - 0
	3.125x23.375	16 - 2	12 - 11	11 - 4
	3.125x24.750	16 - 6	13 - 3	11 - 7
	5.125x5.500	6 - 11	5 - 2	4 - 3
	5.125x6.875	8 - 8	6 - 5	5 - 4
	5.125x8.250	10 - 4	7 - 8	6 - 4
	5.125x9.625	12 - 1	9 - 0	7 - 5
	5.125x11.000	13 - 10	10 - 3	8 - 6
	5.125x12.375	15 - 6	11 - 6	9 - 6
	5.125x13.750	17 - 3	12 - 9	10 - 7
	5.125x15.125	18 - 10	14 - 0	11 - 7
	5.125x16.500	20-0†	15 - 2	12 - 7
	5.125x17.875	20-0†	16 - 4	13 - 7
	5.125x19.250	20-0†	17 - 5	14 - 6
	5.125x20.625	20-0†	18 - 6	15 - 6
	5.125x22.000	20-0†	19 - 5	16 - 4
	5.125x23.375	20-0†	20-0†	17 - 2
	5.125x24.75	20-0†	20-0†	17 - 11

† Spans are limited to 20 feet in length.
1 Tabulated spans are based on the lowest F_b, F_v, and E for #2 Grade Douglas Fir-Larch, Hem-Fir, Southern Pine, and Spruce-Pine-Fir. For #3 Grade lumber, spans shall be multiplied by 0.75.
2 Tabulated spans assume 20F combination glulam with a minimum F_{bx}=2,000psi, F_{vx}=210psi, and E=1,500,000psi.
3 Tabulated spans assume headers supporting single span floor joists. For headers supporting continuous two span floor joists, tabulated spans shall be multiplied by 0.89.
4 The number of jack studs required at each end of the header shall be determined from Table 3.24C.
5 Spans checked for live load deflection only.

Copyright © American Wood Council. Downloaded/printed pursuant to License Agreement. No reproduction or transfer authorized.

Table 3.24B2 Laterally Supported (Raised) Header Spans for Interior Loadbearing Walls

(Supporting Two Center Bearing Floors)

Floor Live Load = 40 psf, L/Δ_{LL}=360, Floor Assembly Dead Load = 10 psf

Raised Interior

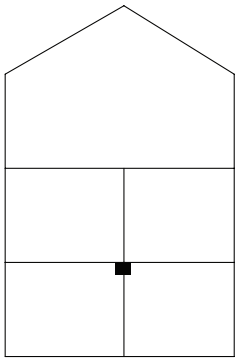

Headers Supporting	Size	Building Width (ft) 12	24	36
		Maximum Header/Girder Spans (ft.-in.) for Common Lumber Species[1,3,4,5]		
Two Floors Only (Center Bearing)	1-2x6	2 - 8	2 - 0	1 - 7
	1-2x8	3 - 4	2 - 6	2 - 1
	1-2x10	4 - 0	2 - 11	2 - 5
	1-2x12	4 - 8	3 - 6	2 - 10
	2-2x4	2 - 7	1 - 11	1 - 7
	2-2x6	3 - 11	2 - 11	2 - 5
	2-2x8	5 - 0	3 - 8	3 - 1
	2-2x10	5 - 11	4 - 4	3 - 7
	2-2x12	6 - 11	5 - 2	4 - 3
	3-2x8	6 - 3	4 - 7	3 - 10
	3-2x10	7 - 5	5 - 6	4 - 6
	3-2x12	8 - 8	6 - 5	5 - 4
	4-2x8	7 - 2	5 - 4	4 - 5
	4-2x10	8 - 6	6 - 4	5 - 3
	4-2x12	10 - 1	7 - 5	6 - 2
	Size	Maximum Header/Girder Spans (ft-in.) for Glued Laminated Timber Beams[2,3,4,5]		
	3.125x5.500	5 - 5	4 - 0	3 - 4
	3.125x6.875	6 - 9	5 - 0	4 - 2
	3.125x8.250	8 - 1	6 - 0	5 - 0
	3.125x9.625	9 - 5	7 - 0	5 - 9
	3.125x11.000	10 - 10	8 - 0	6 - 7
	3.125x12.375	12 - 2	9 - 0	7 - 5
	3.125x13.750	13 - 6	10 - 0	8 - 3
	3.125x15.125	14 - 10	11 - 0	9 - 1
	3.125x16.500	16 - 2	12 - 0	9 - 11
	3.125x17.875	17 - 7	13 - 0	10 - 9
	3.125x19.250	18 - 11	14 - 0	11 - 7
	3.125x20.625	20-0†	15 - 0	12 - 5
	3.125x22.000	20-0†	16 - 0	13 - 3
	3.125x23.375	20-0†	16 - 11	14 - 1
	3.125x24.750	20-0†	17 - 11	14 - 11
	5.125x5.500	6 - 11	5 - 1	4 - 3
	5.125x6.875	8 - 8	6 - 5	5 - 4
	5.125x8.25	10 - 4	7 - 8	6 - 4
	5.125x9.625	12 - 1	8 - 11	7 - 5
	5.125x11.000	13 - 10	10 - 3	8 - 6
	5.125x12.375	15 - 6	11 - 6	9 - 6
	5.125x13.750	17 - 3	12 - 9	10 - 7
	5.125x15.125	18 - 11	14 - 1	11 - 8
	5.125x16.500	20-0†	15 - 4	12 - 8
	5.125x17.875	20-0†	16 - 6	13 - 9
	5.125x19.250	20-0†	17 - 7	14 - 9
	5.125x20.625	20-0†	18 - 9	15 - 8
	5.125x22.000	20-0†	19 - 10	16 - 8
	5.125x23.375	20-0†	20-0†	17 - 7

† Spans are limited to 20 feet in length.

1 Tabulated spans are based on the lowest F_b, F_v, and E for #2 Grade Douglas Fir-Larch, Hem-Fir, Southern Pine, and Spruce-Pine-Fir. For #3 Grade lumber, spans shall be multiplied by 0.75.

2 Tabulated spans assume 20F combination glulam with a minimum F_{bx}=2,000psi, F_{vx}=210psi, and E=1,500,000psi.

3 Tabulated spans assume headers supporting single span floor joists. For headers supporting continuous two span floor joists, tabulated spans shall be multiplied by 0.89.

4 The number of jack studs required at each end of the header shall be determined from Table 3.24C.

5 Spans checked for live load deflection only.

Copyright © American Wood Council. Downloaded/printed pursuant to License Agreement. No reproduction or transfer authorized.

Table 3.24C Jack Stud Requirements for Headers in Interior Loadbearing Walls

		Roof Span (ft)											
		12				24				36			
		Header Width											
		3" (2-2x)	4.5" (3-2x)	5"	6" (4-2x)	3" (2-2x)	4.5" (3-2x)	5"	6" (4-2x)	3" (2-2x)	4.5" (3-2x)	5"	6" (4-2x)
Header Supporting	**Header Span (ft)**	**Number of Jack Studs Required at Each End of the Header[1,2]**											
One Floor Only (Center Bearing)	**2**	1	1	1	1	1	1	1	1	1	1	1	1
	4	1	1	1	1	1	1	1	1	1	1	1	1
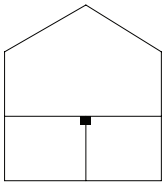	**6**	1	1	1	1	1	1	1	1	2	1	1	1
	8	1	1	1	1	2	1	1	1	2	2	2	1
	10	1	1	1	1	2	2	1	1	3	2	2	2
	12	1	1	1	1	2	2	2	1	3	2	2	2
	14	2	1	1	1	3	2	2	2	4	3	3	2
	16	2	1	1	1	3	2	2	2	4	3	3	2
	18	2	1	1	1	3	2	2	2	5	3	3	3
	20	2	2	1	1	4	3	2	2	5	4	3	3
Two Floors (Center Bearing)	**2**	1	1	1	1	1	1	1	1	2	1	1	1
	4	1	1	1	1	2	1	1	1	3	2	2	2
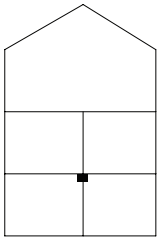	**6**	2	1	1	1	3	2	2	2	4	3	2	2
	8	2	2	1	1	3	2	2	2	5	3	3	3
	10	2	2	2	1	4	3	3	2	6	4	4	3
	12	3	2	2	2	5	3	3	3	7	5	4	4
	14	3	2	2	2	6	4	4	3	8	5	5	4
	16	4	3	2	2	6	4	4	3	9	6	6	5
	18	4	3	3	2	7	5	4	4	10	7	6	5
	20	4	3	3	2	8	5	5	4	11	8	7	6

1 Where the number of jack studs equals 1, the header shall be permitted to be supported by a framing anchor attached to the full-height wall stud.

2 An equivalent number of full height studs are permitted to replace jack studs, when adequate gravity connections are provided.

Copyright © American Wood Council. Downloaded/printed pursuant to License Agreement. No reproduction or transfer authorized.

Table 3.25A1 Ceiling Joist Spans for Common Lumber Species

(Uninhabitable Attics Without Storage) Live Load = 10 psf, L/Δ_{LL}=240, Dead Load = 5 psf, Flexible Finish (including gypsum board)

LL = 10 psf
L/Δ_{LL} = 240

			2x4	2x6	2x8	2x10
			Maximum Ceiling Joist Spans[1,2]			
Joist Spacing (in.)	Species	Grade	(ft-in.)	(ft-in.)	(ft-in.)	(ft-in.)
12	Douglas Fir-Larch	SS	13 - 2	20 - 8	26 - 0	26 - 0
	Douglas Fir-Larch	No.1	12 - 8	19 - 11	26 - 0	26 - 0
	Douglas Fir-Larch	No.2	12 - 5	19 - 6	25 - 8	26 - 0
	Douglas Fir-Larch	No.3	11 - 1	16 - 3	20 - 7	25 - 2
	Hem-Fir	SS	12 - 5	19 - 6	25 - 8	26 - 0
	Hem-Fir	No.1	12 - 2	19 - 1	25 - 2	26 - 0
	Hem-Fir	No.2	11 - 7	18 - 2	24 - 0	26 - 0
	Hem-Fir	No.3	10 - 10	15 - 10	20 - 1	24 - 6
	Southern Pine	SS	12 - 11	20 - 3	26 - 0	26 - 0
	Southern Pine	No.1	12 - 5	19 - 6	25 - 8	26 - 0
	Southern Pine	No.2	11 - 10	18 - 8	24 - 7	26 - 0
	Southern Pine	No.3	10 - 1	14 - 11	18 - 9	22 - 9
	Spruce-Pine Fir	SS	12 - 2	19 - 1	25 - 2	26 - 0
	Spruce-Pine Fir	No.1	11 - 10	18 - 8	24 - 7	26 - 0
	Spruce-Pine Fir	No.2	11 - 10	18 - 8	24 - 7	26 - 0
	Spruce-Pine Fir	No.3	10 - 10	15 - 10	20 - 1	24 - 6
16	Douglas Fir-Larch	SS	11 - 11	18 - 9	24 - 8	26 - 0
	Douglas Fir-Larch	No.1	11 - 6	18 - 1	23 - 10	26 - 0
	Douglas Fir-Larch	No.2	11 - 3	17 - 8	23 - 4	26 - 0
	Douglas Fir-Larch	No.3	9 - 7	14 - 1	17 - 10	21 - 9
	Hem-Fir	SS	11 - 3	17 - 8	23 - 4	26 - 0
	Hem-Fir	No.1	11 - 0	17 - 4	22 - 10	26 - 0
	Hem-Fir	No.2	10 - 6	16 - 6	21 - 9	26 - 0
	Hem-Fir	No.3	9 - 5	13 - 9	17 - 5	21 - 3
	Southern Pine	SS	11 - 9	18 - 5	24 - 3	26 - 0
	Southern Pine	No.1	11 - 3	17 - 8	23 - 4	26 - 0
	Southern Pine	No.2	10 - 9	16 - 11	21 - 7	25 - 7
	Southern Pine	No.3	8 - 9	12 - 11	16 - 3	19 - 9
	Spruce-Pine Fir	SS	11 - 0	17 - 4	22 - 10	26 - 0
	Spruce-Pine Fir	No.1	10 - 9	16 - 11	22 - 4	26 - 0
	Spruce-Pine Fir	No.2	10 - 9	16 - 11	22 - 4	26 - 0
	Spruce-Pine Fir	No.3	9 - 5	13 - 9	17 - 5	21 - 3
19.2	Douglas Fir-Larch	SS	11 - 3	17 - 8	23 - 3	26 - 0
	Douglas Fir-Larch	No.1	10 - 10	17 - 0	22 - 5	26 - 0
	Douglas Fir-Larch	No.2	10 - 7	16 - 8	21 - 4	26 - 0
	Douglas Fir-Larch	No.3	8 - 9	12 - 10	16 - 3	19 - 10
	Hem-Fir	SS	10 - 7	16 - 8	22 - 0	26 - 0
	Hem-Fir	No.1	10 - 4	16 - 4	21 - 6	26 - 0
	Hem-Fir	No.2	9 - 11	15 - 7	20 - 6	25 - 3
	Hem-Fir	No.3	8 - 7	12 - 6	15 - 10	19 - 5
	Southern Pine	SS	11 - 0	17 - 4	22 - 10	26 - 0
	Southern Pine	No.1	10 - 7	16 - 8	22 - 0	26 - 0
	Southern Pine	No.2	10 - 2	15 - 7	19 - 8	23 - 5
	Southern Pine	No.3	8 - 0	11 - 9	14 - 10	18 - 0
	Spruce-Pine Fir	SS	10 - 4	16 - 4	21 - 6	26 - 0
	Spruce-Pine Fir	No.1	10 - 2	15 - 11	21 - 0	25 - 8
	Spruce-Pine Fir	No.2	10 - 2	15 - 11	21 - 0	25 - 8
	Spruce-Pine Fir	No.3	8 - 7	12 - 6	15 - 10	19 - 5
24	Douglas Fir-Larch	SS	10 - 5	16 - 4	21 - 7	26 - 0
	Douglas Fir-Larch	No.1	10 - 0	15 - 9	20 - 1	24 - 6
	Douglas Fir-Larch	No.2	9 - 10	15 - 0	19 - 1	23 - 3
	Douglas Fir-Larch	No.3	7 - 10	11 - 6	14 - 7	17 - 9
	Hem-Fir	SS	9 - 10	15 - 6	20 - 5	26 - 0
	Hem-Fir	No.1	9 - 8	15 - 2	19 - 10	24 - 3
	Hem-Fir	No.2	9 - 2	14 - 5	18 - 6	22 - 7
	Hem-Fir	No.3	7 - 8	11 - 2	14 - 2	17 - 4
	Southern Pine	SS	10 - 3	16 - 1	21 - 2	26 - 0
	Southern Pine	No.1	9 - 10	15 - 6	20 - 5	24 - 0
	Southern Pine	No.2	9 - 3	13 - 11	17 - 7	20 - 11
	Southern Pine	No.3	7 - 2	10 - 6	13 - 3	16 - 1
	Spruce-Pine Fir	SS	9 - 8	15 - 2	19 - 11	25 - 5
	Spruce-Pine Fir	No.1	9 - 5	14 - 9	18 - 9	22 - 11
	Spruce-Pine Fir	No.2	9 - 5	14 - 9	18 - 9	22 - 11
	Spruce-Pine Fir	No.3	7 - 8	11 - 2	14 - 2	17 - 4

1 Bracing shall be provided in accordance with 3.3.1.4.
2 Spans checked for live load deflection only.
NOTE: Spans are limited to 26 feet in length. Check sources for availability of lumber in lengths greater than 20 feet.

Copyright © American Wood Council. Downloaded/printed pursuant to License Agreement. No reproduction or transfer authorized.

Table 3.25A2 Ceiling Joist Spans for Common Lumber Species

(Uninhabitable Attics Without Storage) Live Load = 10 psf, L/Δ_{LL}=360, Dead Load = 5 psf, Brittle Finish (including plaster and stucco)

LL = 10 psf
L/Δ_{LL} = 360

			2x4	2x6	2x8	2x10
			Maximum Ceiling Joist Spans[1,2]			
Joist Spacing (in.)	Species	Grade	(ft-in.)	(ft-in.)	(ft-in.)	(ft-in.)
12	Douglas Fir-Larch	SS	11 - 6	18 - 0	23 - 9	26 - 0
	Douglas Fir-Larch	No.1	11 - 1	17 - 4	22 - 11	26 - 0
	Douglas Fir-Larch	No.2	10 - 10	17 - 0	22 - 5	26 - 0
	Douglas Fir-Larch	No.3	10 - 4	16 - 3	20 - 7	25 - 2
	Hem-Fir	SS	10 - 10	17 - 0	22 - 5	26 - 0
	Hem-Fir	No.1	10 - 7	16 - 8	22 - 0	26 - 0
	Hem-Fir	No.2	10 - 1	15 - 11	20 - 11	26 - 0
	Hem-Fir	No.3	9 - 10	15 - 6	20 - 1	24 - 6
	Southern Pine	SS	11 - 3	17 - 8	23 - 4	26 - 0
	Southern Pine	No.1	10 - 10	17 - 0	22 - 5	26 - 0
	Southern Pine	No.2	10 - 4	16 - 3	21 - 5	26 - 0
	Southern Pine	No.3	10 - 1	14 - 11	18 - 9	22 - 9
	Spruce-Pine Fir	SS	10 - 7	16 - 8	22 - 0	26 - 0
	Spruce-Pine Fir	No.1	10 - 4	16 - 3	21 - 5	26 - 0
	Spruce-Pine Fir	No.2	10 - 4	16 - 3	21 - 5	26 - 0
	Spruce-Pine Fir	No.3	9 - 10	15 - 6	20 - 1	24 - 6
16	Douglas Fir-Larch	SS	10 - 5	16 - 4	21 - 7	26 - 0
	Douglas Fir-Larch	No.1	10 - 0	15 - 9	20 - 10	26 - 0
	Douglas Fir-Larch	No.2	9 - 10	15 - 6	20 - 5	26 - 0
	Douglas Fir-Larch	No.3	9 - 5	14 - 1	17 - 10	21 - 9
	Hem-Fir	SS	9 - 10	15 - 6	20 - 5	26 - 0
	Hem-Fir	No.1	9 - 8	15 - 2	19 - 11	25 - 5
	Hem-Fir	No.2	9 - 2	14 - 5	19 - 0	24 - 3
	Hem-Fir	No.3	8 - 11	13 - 9	17 - 5	21 - 3
	Southern Pine	SS	10 - 3	16 - 1	21 - 2	26 - 0
	Southern Pine	No.1	9 - 10	15 - 6	20 - 5	26 - 0
	Southern Pine	No.2	9 - 5	14 - 9	19 - 6	24 - 10
	Southern Pine	No.3	8 - 9	12 - 11	16 - 3	19 - 9
	Spruce-Pine Fir	SS	9 - 8	15 - 2	19 - 11	25 - 5
	Spruce-Pine Fir	No.1	9 - 5	14 - 9	19 - 6	24 - 10
	Spruce-Pine Fir	No.2	9 - 5	14 - 9	19 - 6	24 - 10
	Spruce-Pine Fir	No.3	8 - 11	13 - 9	17 - 5	21 - 3
19.2	Douglas Fir-Larch	SS	9 - 10	15 - 5	20 - 4	25 - 11
	Douglas Fir-Larch	No.1	9 - 5	14 - 10	19 - 7	25 - 0
	Douglas Fir-Larch	No.2	9 - 3	14 - 7	19 - 2	24 - 6
	Douglas Fir-Larch	No.3	8 - 9	12 - 10	16 - 3	19 - 10
	Hem-Fir	SS	9 - 3	14 - 7	19 - 2	24 - 6
	Hem-Fir	No.1	9 - 1	14 - 3	18 - 9	24 - 0
	Hem-Fir	No.2	8 - 8	13 - 7	17 - 11	22 - 10
	Hem-Fir	No.3	8 - 5	12 - 6	15 - 10	19 - 5
	Southern Pine	SS	9 - 8	15 - 2	19 - 11	25 - 5
	Southern Pine	No.1	9 - 3	14 - 7	19 - 2	24 - 6
	Southern Pine	No.2	8 - 10	13 - 11	18 - 4	23 - 5
	Southern Pine	No.3	8 - 0	11 - 9	14 - 10	18 - 0
	Spruce-Pine Fir	SS	9 - 1	14 - 3	18 - 9	24 - 0
	Spruce-Pine Fir	No.1	8 - 10	13 - 11	18 - 4	23 - 5
	Spruce-Pine Fir	No.2	8 - 10	13 - 11	18 - 4	23 - 5
	Spruce-Pine Fir	No.3	8 - 5	12 - 6	15 - 10	19 - 5
24	Douglas Fir-Larch	SS	9 - 1	14 - 4	18 - 10	24 - 1
	Douglas Fir-Larch	No.1	8 - 9	13 - 9	18 - 2	23 - 2
	Douglas Fir-Larch	No.2	8 - 7	13 - 6	17 - 10	22 - 9
	Douglas Fir-Larch	No.3	7 - 10	11 - 6	14 - 7	17 - 9
	Hem-Fir	SS	8 - 7	13 - 6	17 - 10	22 - 9
	Hem-Fir	No.1	8 - 5	13 - 3	17 - 5	22 - 3
	Hem-Fir	No.2	8 - 0	12 - 7	16 - 7	21 - 2
	Hem-Fir	No.3	7 - 8	11 - 2	14 - 2	17 - 4
	Southern Pine	SS	8 - 11	14 - 1	18 - 6	23 - 8
	Southern Pine	No.1	8 - 7	13 - 6	17 - 10	22 - 9
	Southern Pine	No.2	8 - 3	12 - 11	17 - 0	20 - 11
	Southern Pine	No.3	7 - 2	10 - 6	13 - 3	16 - 1
	Spruce-Pine Fir	SS	8 - 5	13 - 3	17 - 5	22 - 3
	Spruce-Pine Fir	No.1	8 - 3	12 - 11	17 - 0	21 - 9
	Spruce-Pine Fir	No.2	8 - 3	12 - 11	17 - 0	21 - 9
	Spruce-Pine Fir	No.3	7 - 8	11 - 2	14 - 2	17 - 4

1 Bracing shall be provided in accordance with 3.3.1.4.
2 Spans checked for live load deflection only.
NOTE: Spans are limited to 26 feet in length. Check sources for availability of lumber in lengths greater than 20 feet.

Copyright © American Wood Council. Downloaded/printed pursuant to License Agreement. No reproduction or transfer authorized.

Table 3.25B1 Ceiling Joist Spans for Common Lumber Species

(Uninhabitable Attics With Limited Storage) Live Load = 20 psf, L/Δ_{LL}=240, Dead Load = 10 psf, Flexible Finish (including gypsum board)

LL = 20 psf
L/Δ_{LL} = 240

			2x4	2x6	2x8	2x10
			Maximum Ceiling Joist Spans[1,2]			
Joist Spacing (in.)	Species	Grade	(ft-in.)	(ft-in.)	(ft-in.)	(ft-in.)
12	Douglas Fir-Larch	SS	10 - 5	16 - 4	21 - 7	26 - 0
	Douglas Fir-Larch	No.1	10 - 0	15 - 9	20 - 1	24 - 6
	Douglas Fir-Larch	No.2	9 - 10	15 - 0	19 - 1	23 - 3
	Douglas Fir-Larch	No.3	7 - 10	11 - 6	14 - 7	17 - 9
	Hem-Fir	SS	9 - 10	15 - 6	20 - 5	26 - 0
	Hem-Fir	No.1	9 - 8	15 - 2	19 - 10	24 - 3
	Hem-Fir	No.2	9 - 2	14 - 5	18 - 6	22 - 7
	Hem-Fir	No.3	7 - 8	11 - 2	14 - 2	17 - 4
	Southern Pine	SS	10 - 3	16 - 1	21 - 2	26 - 0
	Southern Pine	No.1	9 - 10	15 - 6	20 - 5	24 - 0
	Southern Pine	No.2	9 - 3	13 - 11	17 - 7	20 - 11
	Southern Pine	No.3	7 - 2	10 - 6	13 - 3	16 - 1
	Spruce-Pine Fir	SS	9 - 8	15 - 2	19 - 11	25 - 5
	Spruce-Pine Fir	No.1	9 - 5	14 - 9	18 - 9	22 - 11
	Spruce-Pine Fir	No.2	9 - 5	14 - 9	18 - 9	22 - 11
	Spruce-Pine Fir	No.3	7 - 8	11 - 2	14 - 2	17 - 4
16	Douglas Fir-Larch	SS	9 - 6	14 - 11	19 - 7	25 - 0
	Douglas Fir-Larch	No.1	9 - 1	13 - 9	17 - 5	21 - 3
	Douglas Fir-Larch	No.2	8 - 11	13 - 0	16 - 6	20 - 2
	Douglas Fir-Larch	No.3	6 - 10	9 - 11	12 - 7	15 - 5
	Hem-Fir	SS	8 - 11	14 - 1	18 - 6	23 - 8
	Hem-Fir	No.1	8 - 9	13 - 7	17 - 2	21 - 0
	Hem-Fir	No.2	8 - 4	12 - 8	16 - 0	19 - 7
	Hem-Fir	No.3	6 - 8	9 - 8	12 - 4	15 - 0
	Southern Pine	SS	9 - 4	14 - 7	19 - 3	24 - 7
	Southern Pine	No.1	8 - 11	14 - 0	17 - 9	20 - 9
	Southern Pine	No.2	8 - 0	12 - 0	15 - 3	18 - 1
	Southern Pine	No.3	6 - 2	9 - 2	11 - 6	14 - 0
	Spruce-Pine Fir	SS	8 - 9	13 - 9	18 - 2	23 - 1
	Spruce-Pine Fir	No.1	8 - 7	12 - 10	16 - 3	19 - 10
	Spruce-Pine Fir	No.2	8 - 7	12 - 10	16 - 3	19 - 10
	Spruce-Pine Fir	No.3	6 - 8	9 - 8	12 - 4	15 - 0
19.2	Douglas Fir-Larch	SS	8 - 11	14 - 0	18 - 5	23 - 7
	Douglas Fir-Larch	No.1	8 - 7	12 - 6	15 - 10	19 - 5
	Douglas Fir-Larch	No.2	8 - 2	11 - 11	15 - 1	18 - 5
	Douglas Fir-Larch	No.3	6 - 2	9 - 1	11 - 6	14 - 1
	Hem-Fir	SS	8 - 5	13 - 3	17 - 5	22 - 3
	Hem-Fir	No.1	8 - 3	12 - 4	15 - 8	19 - 2
	Hem-Fir	No.2	7 - 10	11 - 7	14 - 8	17 - 10
	Hem-Fir	No.3	6 - 1	8 - 10	11 - 3	13 - 8
	Southern Pine	SS	8 - 9	13 - 9	18 - 2	23 - 1
	Southern Pine	No.1	8 - 5	12 - 9	16 - 2	18 - 11
	Southern Pine	No.2	7 - 4	11 - 0	13 - 11	16 - 6
	Southern Pine	No.3	5 - 8	8 - 4	10 - 6	12 - 9
	Spruce-Pine Fir	SS	8 - 3	12 - 11	17 - 1	21 - 8
	Spruce-Pine Fir	No.1	8 - 0	11 - 9	14 - 10	18 - 2
	Spruce-Pine Fir	No.2	8 - 0	11 - 9	14 - 10	18 - 2
	Spruce-Pine Fir	No.3	6 - 1	8 - 10	11 - 3	13 - 8
24	Douglas Fir-Larch	SS	8 - 3	13 - 0	17 - 2	21 - 3
	Douglas Fir-Larch	No.1	7 - 8	11 - 2	14 - 2	17 - 4
	Douglas Fir-Larch	No.2	7 - 3	10 - 8	13 - 6	16 - 5
	Douglas Fir-Larch	No.3	5 - 7	8 - 1	10 - 3	12 - 7
	Hem-Fir	SS	7 - 10	12 - 3	16 - 2	20 - 6
	Hem-Fir	No.1	7 - 7	11 - 1	14 - 0	17 - 1
	Hem-Fir	No.2	7 - 1	10 - 4	13 - 1	16 - 0
	Hem-Fir	No.3	5 - 5	7 - 11	10 - 0	12 - 3
	Southern Pine	SS	8 - 1	12 - 9	16 - 10	21 - 6
	Southern Pine	No.1	7 - 8	11 - 5	14 - 6	16 - 11
	Southern Pine	No.2	6 - 7	9 - 10	12 - 6	14 - 9
	Southern Pine	No.3	5 - 1	7 - 5	9 - 5	11 - 5
	Spruce-Pine Fir	SS	7 - 8	12 - 0	15 - 10	19 - 5
	Spruce-Pine Fir	No.1	7 - 2	10 - 6	13 - 3	16 - 3
	Spruce-Pine Fir	No.2	7 - 2	10 - 6	13 - 3	16 - 3
	Spruce-Pine Fir	No.3	5 - 5	7 - 11	10 - 0	12 - 3

1 Bracing shall be provided in accordance with 3.3.1.4.
2 Spans checked for live load deflection only.
NOTE: Spans are limited to 26 feet in length. Check sources for availability of lumber in lengths greater than 20 feet.

Copyright © American Wood Council. Downloaded/printed pursuant to License Agreement. No reproduction or transfer authorized.

Table 3.25B2 Ceiling Joist Spans for Common Lumber Species

(Uninhabitable Attics With Limited Storage) Live Load = 20 psf, L/Δ_{LL}=360, Dead Load = 10 psf, Brittle Finish (including plaster and stucco)

LL = 20 psf
L/Δ_{LL} = 360

			Dead Load = 10 psf			
			2x4	2x6	2x8	2x10
			Maximum Ceiling Joist Spans[1,2]			
Joist Spacing (in.)	Species	Grade	(ft-in.)	(ft-in.)	(ft-in.)	(ft-in.)
12	Douglas Fir-Larch	SS	9 - 1	14 - 4	18 - 10	24 - 1
	Douglas Fir-Larch	No.1	8 - 9	13 - 9	18 - 2	23 - 2
	Douglas Fir-Larch	No.2	8 - 7	13 - 6	17 - 10	22 - 9
	Douglas Fir-Larch	No.3	7 - 10	11 - 6	14 - 7	17 - 9
	Hem-Fir	SS	8 - 7	13 - 6	17 - 10	22 - 9
	Hem-Fir	No.1	8 - 5	13 - 3	17 - 5	22 - 3
	Hem-Fir	No.2	8 - 0	12 - 7	16 - 7	21 - 2
	Hem-Fir	No.3	7 - 8	11 - 2	14 - 2	17 - 4
	Southern Pine	SS	8 - 11	14 - 1	18 - 6	23 - 8
	Southern Pine	No.1	8 - 7	13 - 6	17 - 10	22 - 9
	Southern Pine	No.2	8 - 3	12 - 11	17 - 0	20 - 11
	Southern Pine	No.3	7 - 2	10 - 6	13 - 3	16 - 1
	Spruce-Pine Fir	SS	8 - 5	13 - 3	17 - 5	22 - 3
	Spruce-Pine Fir	No.1	8 - 3	12 - 11	17 - 0	21 - 9
	Spruce-Pine Fir	No.2	8 - 3	12 - 11	17 - 0	21 - 9
	Spruce-Pine Fir	No.3	7 - 8	11 - 2	14 - 2	17 - 4
16	Douglas Fir-Larch	SS	8 - 3	13 - 0	17 - 2	21 - 10
	Douglas Fir-Larch	No.1	8 - 0	12 - 6	16 - 6	21 - 1
	Douglas Fir-Larch	No.2	7 - 10	12 - 3	16 - 2	20 - 2
	Douglas Fir-Larch	No.3	6 - 10	9 - 11	12 - 7	15 - 5
	Hem-Fir	SS	7 - 10	12 - 3	16 - 2	20 - 8
	Hem-Fir	No.1	7 - 8	12 - 0	15 - 10	20 - 2
	Hem-Fir	No.2	7 - 3	11 - 5	15 - 1	19 - 3
	Hem-Fir	No.3	6 - 8	9 - 8	12 - 4	15 - 0
	Southern Pine	SS	8 - 1	12 - 9	16 - 10	21 - 6
	Southern Pine	No.1	7 - 10	12 - 3	16 - 2	20 - 8
	Southern Pine	No.2	7 - 6	11 - 9	15 - 3	18 - 1
	Southern Pine	No.3	6 - 2	9 - 2	11 - 6	14 - 0
	Spruce-Pine Fir	SS	7 - 8	12 - 0	15 - 10	20 - 2
	Spruce-Pine Fir	No.1	7 - 6	11 - 9	15 - 6	19 - 9
	Spruce-Pine Fir	No.2	7 - 6	11 - 9	15 - 6	19 - 9
	Spruce-Pine Fir	No.3	6 - 8	9 - 8	12 - 4	15 - 0
19.2	Douglas Fir-Larch	SS	7 - 9	12 - 3	16 - 1	20 - 7
	Douglas Fir-Larch	No.1	7 - 6	11 - 9	15 - 6	19 - 5
	Douglas Fir-Larch	No.2	7 - 4	11 - 7	15 - 1	18 - 5
	Douglas Fir-Larch	No.3	6 - 2	9 - 1	11 - 6	14 - 1
	Hem-Fir	SS	7 - 4	11 - 7	15 - 3	19 - 5
	Hem-Fir	No.1	7 - 2	11 - 4	14 - 11	19 - 0
	Hem-Fir	No.2	6 - 10	10 - 9	14 - 2	17 - 10
	Hem-Fir	No.3	6 - 1	8 - 10	11 - 3	13 - 8
	Southern Pine	SS	7 - 8	12 - 0	15 - 10	20 - 2
	Southern Pine	No.1	7 - 4	11 - 7	15 - 3	18 - 11
	Southern Pine	No.2	7 - 0	11 - 0	13 - 11	16 - 6
	Southern Pine	No.3	5 - 8	8 - 4	10 - 6	12 - 9
	Spruce-Pine Fir	SS	7 - 2	11 - 4	14 - 11	19 - 0
	Spruce-Pine Fir	No.1	7 - 0	11 - 1	14 - 7	18 - 2
	Spruce-Pine Fir	No.2	7 - 0	11 - 1	14 - 7	18 - 2
	Spruce-Pine Fir	No.3	6 - 1	8 - 10	11 - 3	13 - 8
24	Douglas Fir-Larch	SS	7 - 3	11 - 4	15 - 0	19 - 1
	Douglas Fir-Larch	No.1	7 - 0	10 - 11	14 - 2	17 - 4
	Douglas Fir-Larch	No.2	6 - 10	10 - 8	13 - 6	16 - 5
	Douglas Fir-Larch	No.3	5 - 7	8 - 1	10 - 3	12 - 7
	Hem-Fir	SS	6 - 10	10 - 9	14 - 2	18 - 0
	Hem-Fir	No.1	6 - 8	10 - 6	13 - 10	17 - 1
	Hem-Fir	No.2	6 - 4	10 - 0	13 - 1	16 - 0
	Hem-Fir	No.3	5 - 5	7 - 11	10 - 0	12 - 3
	Southern Pine	SS	7 - 1	11 - 2	14 - 8	18 - 9
	Southern Pine	No.1	6 - 10	10 - 9	14 - 2	16 - 11
	Southern Pine	No.2	6 - 6	9 - 10	12 - 6	14 - 9
	Southern Pine	No.3	5 - 1	7 - 5	9 - 5	11 - 5
	Spruce-Pine Fir	SS	6 - 8	10 - 6	13 - 10	17 - 8
	Spruce-Pine Fir	No.1	6 - 6	10 - 3	13 - 3	16 - 3
	Spruce-Pine Fir	No.2	6 - 6	10 - 3	13 - 3	16 - 3
	Spruce-Pine Fir	No.3	5 - 5	7 - 11	10 - 0	12 - 3

1 Bracing shall be provided in accordance with 3.3.1.4.
2 Spans checked for live load deflection only.
NOTE: Spans are limited to 26 feet in length. Check sources for availability of lumber in lengths greater than 20 feet.

Copyright © American Wood Council. Downloaded/printed pursuant to License Agreement. No reproduction or transfer authorized.

Table 3.26A Rafter Spans for Common Lumber Species

(Ceiling Not Attached to Rafters) Live Load = 20 psf, $L/\Delta_{LL} = 180$

LL = 20 psf
$L/\Delta_{LL} = 180$

			Dead Load = 10 psf					Dead Load = 20 psf				
			2x4	2x6	2x8	2x10	2x12	2x4	2x6	2x8	2x10	2x12
			Maximum Rafter Spans[1,2,3]									
Joist Spacing (in.)	Species	Grade	(ft-in.)	(ft-in.)	(ft-in.)	(ft-in.)	(ft-in.)	(ft-in.)	(ft-in.)	(ft-in.)	(ft-in.)	(ft-in.)
12	Douglas Fir-Larch	SS	11 - 6	18 - 0	23 - 9	26-0†	26-0†	11 - 6	18 - 0	23 - 9	26-0†	26-0†
	Douglas Fir-Larch	No.1	11 - 1	17 - 4	22 - 5	26-0†	26-0†	10 - 6	15 - 4	19 - 5	23 - 9	26-0†
	Douglas Fir-Larch	No.2	10 - 10	16 - 10	21 - 4	26-0†	26-0†	10 - 0	14 - 7	18 - 5	22 - 6	26-0†
	Douglas Fir-Larch	No.3	8 - 9	12 - 10	16 - 3	19 - 10	23 - 0	7 - 7	11 - 1	14 - 1	17 - 2	19 - 11
	Hem-Fir	SS	10 - 10	17 - 0	22 - 5	26-0†	26-0†	10 - 10	17 - 0	22 - 5	26-0†	26-0†
	Hem-Fir	No.1	10 - 7	16 - 8	22 - 0	26-0†	26-0†	10 - 4	15 - 2	19 - 2	23 - 5	26-0†
	Hem-Fir	No.2	10 - 1	15 - 11	20 - 8	25 - 3	26-0†	9 - 8	14 - 2	17 - 11	21 - 11	25 - 5
	Hem-Fir	No.3	8 - 7	12 - 6	15 - 10	19 - 5	22 - 6	7 - 5	10 - 10	13 - 9	16 - 9	19 - 6
	Southern Pine	SS	11 - 3	17 - 8	23 - 4	26-0†	26-0†	11 - 3	17 - 8	23 - 4	26-0†	26-0†
	Southern Pine	No.1	10 - 10	17 - 0	22 - 5	26-0†	26-0†	10 - 6	15 - 8	19 - 10	23 - 2	26-0†
	Southern Pine	No.2	10 - 4	15 - 7	19 - 8	23 - 5	26-0†	9 - 0	13 - 6	17 - 1	20 - 3	23 - 10
	Southern Pine	No.3	8 - 0	11 - 9	14 - 10	18 - 0	21 - 4	6 - 11	10 - 2	12 - 10	15 - 7	18 - 6
	Spruce-Pine Fir	SS	10 - 7	16 - 8	22 - 0	26-0†	26-0†	10 - 7	16 - 8	21 - 9	26-0†	26-0†
	Spruce-Pine Fir	No.1	10 - 4	16 - 3	21 - 0	25 - 8	26-0†	9 - 10	14 - 4	18 - 2	22 - 3	25 - 9
	Spruce-Pine Fir	No.2	10 - 4	16 - 3	21 - 0	25 - 8	26-0†	9 - 10	14 - 4	18 - 2	22 - 3	25 - 9
	Spruce-Pine Fir	No.3	8 - 7	12 - 6	15 - 10	19 - 5	22 - 6	7 - 5	10 - 10	13 - 9	16 - 9	19 - 6
16	Douglas Fir-Larch	SS	10 - 5	16 - 4	21 - 7	26-0†	26-0†	10 - 5	16 - 3	20 - 7	25 - 2	26-0†
	Douglas Fir-Larch	No.1	10 - 0	15 - 4	19 - 5	23 - 9	26-0†	9 - 1	13 - 3	16 - 10	20 - 7	23 - 10
	Douglas Fir-Larch	No.2	9 - 10	14 - 7	18 - 5	22 - 6	26-0†	8 - 7	12 - 7	16 - 0	19 - 6	22 - 7
	Douglas Fir-Larch	No.3	7 - 7	11 - 1	14 - 1	17 - 2	19 - 11	6 - 7	9 - 8	12 - 2	14 - 11	17 - 3
	Hem-Fir	SS	9 - 10	15 - 6	20 - 5	26-0†	26-0†	9 - 10	15 - 6	19 - 11	24 - 4	26-0†
	Hem-Fir	No.1	9 - 8	15 - 2	19 - 2	23 - 5	26-0†	9 - 0	13 - 1	16 - 7	20 - 4	23 - 7
	Hem-Fir	No.2	9 - 2	14 - 2	17 - 11	21 - 11	25 - 5	8 - 5	12 - 3	15 - 6	19 - 0	22 - 0
	Hem-Fir	No.3	7 - 5	10 - 10	13 - 9	16 - 9	19 - 6	6 - 5	9 - 5	11 - 11	14 - 6	16 - 10
	Southern Pine	SS	10 - 3	16 - 1	21 - 2	26-0†	26-0†	10 - 3	16 - 1	21 - 2	25 - 7	26-0†
	Southern Pine	No.1	9 - 10	15 - 6	19 - 10	23 - 2	26-0†	9 - 1	13 - 7	17 - 2	20 - 1	23 - 10
	Southern Pine	No.2	9 - 0	13 - 6	17 - 1	20 - 3	23 - 10	7 - 9	11 - 8	14 - 9	17 - 6	20 - 8
	Southern Pine	No.3	6 - 11	10 - 2	12 - 10	15 - 7	18 - 6	6 - 0	8 - 10	11 - 2	13 - 6	16 - 0
	Spruce-Pine Fir	SS	9 - 8	15 - 2	19 - 11	25 - 5	26-0†	9 - 8	14 - 10	18 - 10	23 - 0	26-0†
	Spruce-Pine Fir	No.1	9 - 5	14 - 4	18 - 2	22 - 3	25 - 9	8 - 6	12 - 5	15 - 9	19 - 3	22 - 4
	Spruce-Pine Fir	No.2	9 - 5	14 - 4	18 - 2	22 - 3	25 - 9	8 - 6	12 - 5	15 - 9	19 - 3	22 - 4
	Spruce-Pine Fir	No.3	7 - 5	10 - 10	13 - 9	16 - 9	19 - 6	6 - 5	9 - 5	11 - 11	14 - 6	16 - 10
19.2	Douglas Fir-Larch	SS	9 - 10	15 - 5	20 - 4	25 - 11	26-0†	9 - 10	14 - 10	18 - 10	23 - 0	26-0†
	Douglas Fir-Larch	No.1	9 - 5	14 - 0	17 - 9	21 - 8	25 - 2	8 - 4	12 - 2	15 - 4	18 - 9	21 - 9
	Douglas Fir-Larch	No.2	9 - 1	13 - 3	16 - 10	20 - 7	23 - 10	7 - 10	11 - 6	14 - 7	17 - 10	20 - 8
	Douglas Fir-Larch	No.3	6 - 11	10 - 2	12 - 10	15 - 8	18 - 3	6 - 0	8 - 9	11 - 2	13 - 7	15 - 9
	Hem-Fir	SS	9 - 3	14 - 7	19 - 2	24 - 6	26-0†	9 - 3	14 - 4	18 - 2	22 - 3	25 - 9
	Hem-Fir	No.1	9 - 1	13 - 10	17 - 6	21 - 5	24 - 10	8 - 2	12 - 0	15 - 2	18 - 6	21 - 6
	Hem-Fir	No.2	8 - 8	12 - 11	16 - 4	20 - 0	23 - 2	7 - 8	11 - 2	14 - 2	17 - 4	20 - 1
	Hem-Fir	No.3	6 - 9	9 - 11	12 - 7	15 - 4	17 - 9	5 - 10	8 - 7	10 - 10	13 - 3	15 - 5
	Southern Pine	SS	9 - 8	15 - 2	19 - 11	25 - 5	26-0†	9 - 8	15 - 2	19 - 7	23 - 4	26-0†
	Southern Pine	No.1	9 - 3	14 - 3	18 - 1	21 - 2	25 - 2	8 - 4	12 - 4	15 - 8	18 - 4	21 - 9
	Southern Pine	No.2	8 - 2	12 - 3	15 - 7	18 - 6	21 - 9	7 - 1	10 - 8	13 - 6	16 - 0	18 - 10
	Southern Pine	No.3	6 - 4	9 - 4	11 - 9	14 - 3	16 - 10	5 - 6	8 - 1	10 - 2	12 - 4	14 - 7
	Spruce-Pine Fir	SS	9 - 1	14 - 3	18 - 9	24 - 0	26-0†	9 - 1	13 - 7	17 - 2	21 - 0	24 - 4
	Spruce-Pine Fir	No.1	8 - 10	13 - 1	16 - 7	20 - 3	23 - 6	7 - 9	11 - 4	14 - 4	17 - 7	20 - 4
	Spruce-Pine Fir	No.2	8 - 10	13 - 1	16 - 7	20 - 3	23 - 6	7 - 9	11 - 4	14 - 4	17 - 7	20 - 4
	Spruce-Pine Fir	No.3	6 - 9	9 - 11	12 - 7	15 - 4	17 - 9	5 - 10	8 - 7	10 - 10	13 - 3	15 - 5
24	Douglas Fir-Larch	SS	9 - 1	14 - 4	18 - 10	23 - 9	26-0†	9 - 1	13 - 3	16 - 10	20 - 7	23 - 10
	Douglas Fir-Larch	No.1	8 - 7	12 - 6	15 - 10	19 - 5	22 - 6	7 - 5	10 - 10	13 - 9	16 - 9	19 - 6
	Douglas Fir-Larch	No.2	8 - 2	11 - 11	15 - 1	18 - 5	21 - 4	7 - 0	10 - 4	13 - 0	15 - 11	18 - 6
	Douglas Fir-Larch	No.3	6 - 2	9 - 1	11 - 6	14 - 1	16 - 3	5 - 4	7 - 10	10 - 0	12 - 2	14 - 1
	Hem-Fir	SS	8 - 7	13 - 6	17 - 10	22 - 9	26-0†	8 - 7	12 - 10	16 - 3	19 - 10	23 - 0
	Hem-Fir	No.1	8 - 5	12 - 4	15 - 8	19 - 2	22 - 2	7 - 4	10 - 9	13 - 7	16 - 7	19 - 3
	Hem-Fir	No.2	7 - 11	11 - 7	14 - 8	17 - 10	20 - 9	6 - 10	10 - 0	12 - 8	15 - 6	17 - 11
	Hem-Fir	No.3	6 - 1	8 - 10	11 - 3	13 - 8	15 - 11	5 - 3	7 - 8	9 - 9	11 - 10	13 - 9
	Southern Pine	SS	8 - 11	14 - 1	18 - 6	23 - 8	26-0†	8 - 11	13 - 10	17 - 6	20 - 10	24 - 8
	Southern Pine	No.1	8 - 7	12 - 9	16 - 2	18 - 11	22 - 6	7 - 5	11 - 1	14 - 0	16 - 5	19 - 6
	Southern Pine	No.2	7 - 4	11 - 0	13 - 11	16 - 6	19 - 6	6 - 4	9 - 6	12 - 1	14 - 4	16 - 10
	Southern Pine	No.3	5 - 8	8 - 4	10 - 6	12 - 9	15 - 1	4 - 11	7 - 3	9 - 1	11 - 0	13 - 1
	Spruce-Pine Fir	SS	8 - 5	13 - 3	17 - 5	21 - 8	25 - 2	8 - 4	12 - 2	15 - 4	18 - 9	21 - 9
	Spruce-Pine Fir	No.1	8 - 0	11 - 9	14 - 10	18 - 2	21 - 0	6 - 11	10 - 2	12 - 10	15 - 8	18 - 3
	Spruce-Pine Fir	No.2	8 - 0	11 - 9	14 - 10	18 - 2	21 - 0	6 - 11	10 - 2	12 - 10	15 - 8	18 - 3
	Spruce-Pine Fir	No.3	6 - 1	8 - 10	11 - 3	13 - 8	15 - 11	5 - 3	7 - 8	9 - 9	11 - 10	13 - 9

† Spans are limited to 26 feet in length.

See footnotes 1-3.

Copyright © American Wood Council. Downloaded/printed pursuant to License Agreement. No reproduction or transfer authorized.

Table 3.26B Rafter Spans for Common Lumber Species

(Ceiling Attached to Rafters) Live Load = 20 psf, L/Δ_{LL} = 240, Flexible Finish (including gypsum board)

LL = 20 psf
L/Δ_{LL} = 240

			Dead Load = 10 psf					Dead Load = 20 psf				
			2x4	2x6	2x8	2x10	2x12	2x4	2x6	2x8	2x10	2x12
			Maximum Rafter Spans[1,2,3]									
Joist Spacing (in.)	Species	Grade	(ft-in.)	(ft-in.)	(ft-in.)	(ft-in.)	(ft-in.)	(ft-in.)	(ft-in.)	(ft-in.)	(ft-in.)	(ft-in.)
12	Douglas Fir-Larch	SS	10 - 5	16 - 4	21 - 7	26-0†	26-0†	10 - 5	16 - 4	21 - 7	26-0†	26-0†
	Douglas Fir-Larch	No.1	10 - 0	15 - 9	20 - 10	26-0†	26-0†	10 - 0	15 - 4	19 - 5	23 - 9	26-0†
	Douglas Fir-Larch	No.2	9 - 10	15 - 6	20 - 5	26-0†	26-0†	9 - 10	14 - 7	18 - 5	22 - 6	26-0†
	Douglas Fir-Larch	No.3	8 - 9	12 - 10	16 - 3	19 - 10	23 - 0	7 - 7	11 - 1	14 - 1	17 - 2	19 - 11
	Hem-Fir	SS	9 - 10	15 - 6	20 - 5	26-0†	26-0†	9 - 10	15 - 6	20 - 5	26-0†	26-0†
	Hem-Fir	No.1	9 - 8	15 - 2	19 - 11	25 - 5	26-0†	9 - 8	15 - 2	19 - 2	23 - 5	26-0†
	Hem-Fir	No.2	9 - 2	14 - 5	19 - 0	24 - 3	26-0†	9 - 2	14 - 2	17 - 11	21 - 11	25 - 5
	Hem-Fir	No.3	8 - 7	12 - 6	15 - 10	19 - 5	22 - 6	7 - 5	10 - 10	13 - 9	16 - 9	19 - 6
	Southern Pine	SS	10 - 3	16 - 1	21 - 2	26-0†	26-0†	10 - 3	16 - 1	21 - 2	26-0†	26-0†
	Southern Pine	No.1	9 - 10	15 - 6	20 - 5	26-0†	26-0†	9 - 10	15 - 6	19 - 10	23 - 2	26-0†
	Southern Pine	No.2	9 - 5	14 - 9	19 - 6	23 - 5	26-0†	9 - 0	13 - 6	17 - 1	20 - 3	23 - 10
	Southern Pine	No.3	8 - 0	11 - 9	14 - 10	18 - 0	21 - 4	6 - 11	10 - 2	12 - 10	15 - 7	18 - 6
	Spruce-Pine Fir	SS	9 - 8	15 - 2	19 - 11	25 - 5	26-0†	9 - 8	15 - 2	19 - 11	25 - 5	26-0†
	Spruce-Pine Fir	No.1	9 - 5	14 - 9	19 - 6	24 - 10	26-0†	9 - 5	14 - 4	18 - 2	22 - 3	25 - 9
	Spruce-Pine Fir	No.2	9 - 5	14 - 9	19 - 6	24 - 10	26-0†	9 - 5	14 - 4	18 - 2	22 - 3	25 - 9
	Spruce-Pine Fir	No.3	8 - 7	12 - 6	15 - 10	19 - 5	22 - 6	7 - 5	10 - 10	13 - 9	16 - 9	19 - 6
16	Douglas Fir-Larch	SS	9 - 6	14 - 11	19 - 7	25 - 0	26-0†	9 - 6	14 - 11	19 - 7	25 - 0	26-0†
	Douglas Fir-Larch	No.1	9 - 1	14 - 4	18 - 11	23 - 9	26-0†	9 - 1	13 - 3	16 - 10	20 - 7	23 - 10
	Douglas Fir-Larch	No.2	8 - 11	14 - 1	18 - 5	22 - 6	26-0†	8 - 7	12 - 7	16 - 0	19 - 6	22 - 7
	Douglas Fir-Larch	No.3	7 - 7	11 - 1	14 - 1	17 - 2	19 - 11	6 - 7	9 - 8	12 - 2	14 - 11	17 - 3
	Hem-Fir	SS	8 - 11	14 - 1	18 - 6	23 - 8	26-0†	8 - 11	14 - 1	18 - 6	23 - 8	26-0†
	Hem-Fir	No.1	8 - 9	13 - 9	18 - 2	23 - 1	26-0†	8 - 9	13 - 1	16 - 7	20 - 4	23 - 7
	Hem-Fir	No.2	8 - 4	13 - 1	17 - 3	21 - 11	25 - 5	8 - 4	12 - 3	15 - 6	19 - 0	22 - 0
	Hem-Fir	No.3	7 - 5	10 - 10	13 - 9	16 - 9	19 - 6	6 - 5	9 - 5	11 - 11	14 - 6	16 - 10
	Southern Pine	SS	9 - 4	14 - 7	19 - 3	24 - 7	26-0†	9 - 4	14 - 7	19 - 3	24 - 7	26-0†
	Southern Pine	No.1	8 - 11	14 - 1	18 - 6	23 - 2	26-0†	8 - 11	13 - 7	17 - 2	20 - 1	23 - 10
	Southern Pine	No.2	8 - 7	13 - 5	17 - 1	20 - 3	23 - 10	7 - 9	11 - 8	14 - 9	17 - 6	20 - 8
	Southern Pine	No.3	6 - 11	10 - 2	12 - 10	15 - 7	18 - 6	6 - 0	8 - 10	11 - 2	13 - 6	16 - 0
	Spruce-Pine Fir	SS	8 - 9	13 - 9	18 - 2	23 - 1	26-0†	8 - 9	13 - 9	18 - 2	23 - 0	26-0†
	Spruce-Pine Fir	No.1	8 - 7	13 - 5	17 - 9	22 - 3	25 - 9	8 - 6	12 - 5	15 - 9	19 - 3	22 - 4
	Spruce-Pine Fir	No.2	8 - 7	13 - 5	17 - 9	22 - 3	25 - 9	8 - 6	12 - 5	15 - 9	19 - 3	22 - 4
	Spruce-Pine Fir	No.3	7 - 5	10 - 10	13 - 9	16 - 9	19 - 6	6 - 5	9 - 5	11 - 11	14 - 6	16 - 10
19.2	Douglas Fir-Larch	SS	8 - 11	14 - 0	18 - 5	23 - 7	26-0†	8 - 11	14 - 0	18 - 5	23 - 0	26-0†
	Douglas Fir-Larch	No.1	8 - 7	13 - 6	17 - 9	21 - 8	25 - 2	8 - 4	12 - 2	15 - 4	18 - 9	21 - 9
	Douglas Fir-Larch	No.2	8 - 5	13 - 3	16 - 10	20 - 7	23 - 10	7 - 10	11 - 6	14 - 7	17 - 10	20 - 8
	Douglas Fir-Larch	No.3	6 - 11	10 - 2	12 - 10	15 - 8	18 - 3	6 - 0	8 - 9	11 - 2	13 - 7	15 - 9
	Hem-Fir	SS	8 - 5	13 - 3	17 - 5	22 - 3	26-0†	8 - 5	13 - 3	17 - 5	22 - 3	25 - 9
	Hem-Fir	No.1	8 - 3	12 - 11	17 - 1	21 - 5	24 - 10	8 - 2	12 - 0	15 - 2	18 - 6	21 - 6
	Hem-Fir	No.2	7 - 10	12 - 4	16 - 3	20 - 0	23 - 2	7 - 8	11 - 2	14 - 2	17 - 4	20 - 1
	Hem-Fir	No.3	6 - 9	9 - 11	12 - 7	15 - 4	17 - 9	5 - 10	8 - 7	10 - 10	13 - 3	15 - 5
	Southern Pine	SS	8 - 9	13 - 9	18 - 2	23 - 1	26-0†	8 - 9	13 - 9	18 - 2	23 - 1	26-0†
	Southern Pine	No.1	8 - 5	13 - 3	17 - 5	21 - 2	25 - 2	8 - 4	12 - 4	15 - 8	18 - 4	21 - 9
	Southern Pine	No.2	8 - 1	12 - 3	15 - 7	18 - 6	21 - 9	7 - 1	10 - 8	13 - 6	16 - 0	18 - 10
	Southern Pine	No.3	6 - 4	9 - 4	11 - 9	14 - 3	16 - 10	5 - 6	8 - 1	10 - 2	12 - 4	14 - 7
	Spruce-Pine Fir	SS	8 - 3	12 - 11	17 - 1	21 - 9	26-0†	8 - 3	12 - 11	17 - 1	21 - 0	24 - 4
	Spruce-Pine Fir	No.1	8 - 1	12 - 8	16 - 7	20 - 3	23 - 6	7 - 9	11 - 4	14 - 4	17 - 7	20 - 4
	Spruce-Pine Fir	No.2	8 - 1	12 - 8	16 - 7	20 - 3	23 - 6	7 - 9	11 - 4	14 - 4	17 - 7	20 - 4
	Spruce-Pine Fir	No.3	6 - 9	9 - 11	12 - 7	15 - 4	17 - 9	5 - 10	8 - 7	10 - 10	13 - 3	15 - 5
24	Douglas Fir-Larch	SS	8 - 3	13 - 0	17 - 2	21 - 10	26-0†	8 - 3	13 - 0	16 - 10	20 - 7	23 - 10
	Douglas Fir-Larch	No.1	8 - 0	12 - 6	15 - 10	19 - 5	22 - 6	7 - 5	10 - 10	13 - 9	16 - 9	19 - 6
	Douglas Fir-Larch	No.2	7 - 10	11 - 11	15 - 1	18 - 5	21 - 4	7 - 0	10 - 4	13 - 0	15 - 11	18 - 6
	Douglas Fir-Larch	No.3	6 - 2	9 - 1	11 - 6	14 - 1	16 - 3	5 - 4	7 - 10	10 - 0	12 - 2	14 - 1
	Hem-Fir	SS	7 - 10	12 - 3	16 - 2	20 - 8	25 - 1	7 - 10	12 - 3	16 - 2	19 - 10	23 - 0
	Hem-Fir	No.1	7 - 8	12 - 0	15 - 8	19 - 2	22 - 2	7 - 4	10 - 9	13 - 7	16 - 7	19 - 3
	Hem-Fir	No.2	7 - 3	11 - 5	14 - 8	17 - 10	20 - 9	6 - 10	10 - 0	12 - 8	15 - 6	17 - 11
	Hem-Fir	No.3	6 - 1	8 - 10	11 - 3	13 - 8	15 - 11	5 - 3	7 - 8	9 - 9	11 - 10	13 - 9
	Southern Pine	SS	8 - 1	12 - 9	16 - 10	21 - 6	26-0†	8 - 1	12 - 9	16 - 10	20 - 10	24 - 8
	Southern Pine	No.1	7 - 10	12 - 3	16 - 2	18 - 11	22 - 6	7 - 5	11 - 1	14 - 0	16 - 5	19 - 6
	Southern Pine	No.2	7 - 4	11 - 0	13 - 11	16 - 6	19 - 6	6 - 4	9 - 6	12 - 1	14 - 4	16 - 10
	Southern Pine	No.3	5 - 8	8 - 4	10 - 6	12 - 9	15 - 1	4 - 11	7 - 3	9 - 1	11 - 0	13 - 1
	Spruce-Pine Fir	SS	7 - 8	12 - 0	15 - 10	20 - 2	24 - 7	7 - 8	12 - 0	15 - 4	18 - 9	21 - 9
	Spruce-Pine Fir	No.1	7 - 6	11 - 9	14 - 10	18 - 2	21 - 0	6 - 11	10 - 2	12 - 10	15 - 8	18 - 3
	Spruce-Pine Fir	No.2	7 - 6	11 - 9	14 - 10	18 - 2	21 - 0	6 - 11	10 - 2	12 - 10	15 - 8	18 - 3
	Spruce-Pine Fir	No.3	6 - 1	8 - 10	11 - 3	13 - 8	15 - 11	5 - 3	7 - 8	9 - 9	11 - 10	13 - 9

† Spans are limited to 26 feet in length.

See footnotes 1-3.

Copyright © American Wood Council. Downloaded/printed pursuant to License Agreement. No reproduction or transfer authorized.

Table 3.26C Rafter Spans for Common Lumber Species

(Ceiling Attached to Rafters) Live Load = 20 psf, L/Δ_{LL} = 360, Brittle Finish (including plaster and stucco)

LL = 20 psf
L/Δ_{LL} = 360

			Dead Load = 10 psf					Dead Load = 20 psf				
			2x4	2x6	2x8	2x10	2x12	2x4	2x6	2x8	2x10	2x12
			Maximum Rafter Spans[1,2,3]									
Joist Spacing (in.)	Species	Grade	(ft-in.)	(ft-in.)	(ft-in.)	(ft-in.)	(ft-in.)	(ft-in.)	(ft-in.)	(ft-in.)	(ft-in.)	(ft-in.)
	Douglas Fir-Larch	SS	9 - 1	14 - 4	18 - 10	24 - 1	26-0†	9 - 1	14 - 4	18 - 10	24 - 1	26-0†
	Douglas Fir-Larch	No.1	8 - 9	13 - 9	18 - 2	23 - 2	26-0†	8 - 9	13 - 9	18 - 2	23 - 2	26-0†
	Douglas Fir-Larch	No.2	8 - 7	13 - 6	17 - 10	22 - 9	26-0†	8 - 7	13 - 6	17 - 10	22 - 6	26-0†
	Douglas Fir-Larch	No.3	8 - 3	12 - 10	16 - 3	19 - 10	23 - 0	7 - 7	11 - 1	14 - 1	17 - 2	19 - 11
	Hem-Fir	SS	8 - 7	13 - 6	17 - 10	22 - 9	26-0†	8 - 7	13 - 6	17 - 10	22 - 9	26-0†
	Hem-Fir	No.1	8 - 5	13 - 3	17 - 5	22 - 3	26-0†	8 - 5	13 - 3	17 - 5	22 - 3	26-0†
	Hem-Fir	No.2	8 - 0	12 - 7	16 - 7	21 - 2	25 - 9	8 - 0	12 - 7	16 - 7	21 - 2	25 - 5
	Hem-Fir	No.3	7 - 10	12 - 3	15 - 10	19 - 5	22 - 6	7 - 5	10 - 10	13 - 9	16 - 9	19 - 6
	Southern Pine	SS	8 - 11	14 - 1	18 - 6	23 - 8	26-0†	8 - 11	14 - 1	18 - 6	23 - 8	26-0†
	Southern Pine	No.1	8 - 7	13 - 6	17 - 10	22 - 9	26-0†	8 - 7	13 - 6	17 - 10	22 - 9	26-0†
	Southern Pine	No.2	8 - 3	12 - 11	17 - 0	21 - 9	26-0†	8 - 3	12 - 11	17 - 0	20 - 3	23 - 10
	Southern Pine	No.3	8 - 0	11 - 9	14 - 10	18 - 0	21 - 4	6 - 11	10 - 2	12 - 10	15 - 7	18 - 6
	Spruce-Pine Fir	SS	8 - 5	13 - 3	17 - 5	22 - 3	26-0†	8 - 5	13 - 3	17 - 5	22 - 3	26-0†
	Spruce-Pine Fir	No.1	8 - 3	12 - 11	17 - 0	21 - 9	26-0†	8 - 3	12 - 11	17 - 0	21 - 9	25 - 9
	Spruce-Pine Fir	No.2	8 - 3	12 - 11	17 - 0	21 - 9	26-0†	8 - 3	12 - 11	17 - 0	21 - 9	25 - 9
12	Spruce-Pine Fir	No.3	7 - 10	12 - 3	15 - 10	19 - 5	22 - 6	7 - 5	10 - 10	13 - 9	16 - 9	19 - 6
	Douglas Fir-Larch	SS	8 - 3	13 - 0	17 - 2	21 - 10	26-0†	8 - 3	13 - 0	17 - 2	21 - 10	26-0†
	Douglas Fir-Larch	No.1	8 - 0	12 - 6	16 - 6	21 - 1	25 - 7	8 - 0	12 - 6	16 - 6	20 - 7	23 - 10
	Douglas Fir-Larch	No.2	7 - 10	12 - 3	16 - 2	20 - 8	25 - 1	7 - 10	12 - 3	16 - 0	19 - 6	22 - 7
	Douglas Fir-Larch	No.3	7 - 6	11 - 1	14 - 1	17 - 2	19 - 11	6 - 7	9 - 8	12 - 2	14 - 11	17 - 3
	Hem-Fir	SS	7 - 10	12 - 3	16 - 2	20 - 8	25 - 1	7 - 10	12 - 3	16 - 2	20 - 8	25 - 1
	Hem-Fir	No.1	7 - 8	12 - 0	15 - 10	20 - 2	24 - 7	7 - 8	12 - 0	15 - 10	20 - 2	23 - 7
	Hem-Fir	No.2	7 - 3	11 - 5	15 - 1	19 - 3	23 - 5	7 - 3	11 - 5	15 - 1	19 - 0	22 - 0
	Hem-Fir	No.3	7 - 1	10 - 10	13 - 9	16 - 9	19 - 6	6 - 5	9 - 5	11 - 11	14 - 6	16 - 10
	Southern Pine	SS	8 - 1	12 - 9	16 - 10	21 - 6	26-0†	8 - 1	12 - 9	16 - 10	21 - 6	26-0†
	Southern Pine	No.1	7 - 10	12 - 3	16 - 2	20 - 8	25 - 1	7 - 10	12 - 3	16 - 2	20 - 1	23 - 10
	Southern Pine	No.2	7 - 6	11 - 9	15 - 6	19 - 9	23 - 10	7 - 6	11 - 8	14 - 9	17 - 6	20 - 8
	Southern Pine	No.3	6 - 11	10 - 2	12 - 10	15 - 7	18 - 6	6 - 0	8 - 10	11 - 2	13 - 6	16 - 0
	Spruce-Pine Fir	SS	7 - 8	12 - 0	15 - 10	20 - 2	24 - 7	7 - 8	12 - 0	15 - 10	20 - 2	24 - 7
	Spruce-Pine Fir	No.1	7 - 6	11 - 9	15 - 6	19 - 9	24 - 0	7 - 6	11 - 9	15 - 6	19 - 3	22 - 4
	Spruce-Pine Fir	No.2	7 - 6	11 - 9	15 - 6	19 - 9	24 - 0	7 - 6	11 - 9	15 - 6	19 - 3	22 - 4
16	Spruce-Pine Fir	No.3	7 - 1	10 - 10	13 - 9	16 - 9	19 - 6	6 - 5	9 - 5	11 - 11	14 - 6	16 - 10
	Douglas Fir-Larch	SS	7 - 9	12 - 3	16 - 1	20 - 7	25 - 0	7 - 9	12 - 3	16 - 1	20 - 7	25 - 0
	Douglas Fir-Larch	No.1	7 - 6	11 - 9	15 - 6	19 - 10	24 - 1	7 - 6	11 - 9	15 - 4	18 - 9	21 - 9
	Douglas Fir-Larch	No.2	7 - 4	11 - 7	15 - 3	19 - 5	23 - 7	7 - 4	11 - 6	14 - 7	17 - 10	20 - 8
	Douglas Fir-Larch	No.3	6 - 11	10 - 2	12 - 10	15 - 8	18 - 3	6 - 0	8 - 9	11 - 2	13 - 7	15 - 9
	Hem-Fir	SS	7 - 4	11 - 7	15 - 3	19 - 5	23 - 7	7 - 4	11 - 7	15 - 3	19 - 5	23 - 7
	Hem-Fir	No.1	7 - 2	11 - 4	14 - 11	19 - 0	23 - 1	7 - 2	11 - 4	14 - 11	18 - 6	21 - 6
	Hem-Fir	No.2	6 - 10	10 - 9	14 - 2	18 - 1	22 - 1	6 - 10	10 - 9	14 - 2	17 - 4	20 - 1
	Hem-Fir	No.3	6 - 8	9 - 11	12 - 7	15 - 4	17 - 9	5 - 10	8 - 7	10 - 10	13 - 3	15 - 5
	Southern Pine	SS	7 - 8	12 - 0	15 - 10	20 - 2	24 - 7	7 - 8	12 - 0	15 - 10	20 - 2	24 - 7
	Southern Pine	No.1	7 - 4	11 - 7	15 - 3	19 - 5	23 - 7	7 - 4	11 - 7	15 - 3	18 - 4	21 - 9
	Southern Pine	No.2	7 - 0	11 - 1	14 - 7	18 - 6	21 - 9	7 - 0	10 - 8	13 - 6	16 - 0	18 - 10
	Southern Pine	No.3	6 - 4	9 - 4	11 - 9	14 - 3	16 - 10	5 - 6	8 - 1	10 - 2	12 - 4	14 - 7
	Spruce-Pine Fir	SS	7 - 2	11 - 4	14 - 11	19 - 0	23 - 1	7 - 2	11 - 4	14 - 11	19 - 0	23 - 1
	Spruce-Pine Fir	No.1	7 - 0	11 - 1	14 - 7	18 - 7	22 - 7	7 - 0	11 - 1	14 - 4	17 - 7	20 - 4
	Spruce-Pine Fir	No.2	7 - 0	11 - 1	14 - 7	18 - 7	22 - 7	7 - 0	11 - 1	14 - 4	17 - 7	20 - 4
19.2	Spruce-Pine Fir	No.3	6 - 8	9 - 11	12 - 7	15 - 4	17 - 9	5 - 10	8 - 7	10 - 10	13 - 3	15 - 5
	Douglas Fir-Larch	SS	7 - 3	11 - 4	15 - 0	19 - 1	23 - 3	7 - 3	11 - 4	15 - 0	19 - 1	23 - 3
	Douglas Fir-Larch	No.1	7 - 0	10 - 11	14 - 5	18 - 5	22 - 5	7 - 0	10 - 10	13 - 9	16 - 9	19 - 6
	Douglas Fir-Larch	No.2	6 - 10	10 - 9	14 - 2	18 - 0	21 - 4	6 - 10	10 - 4	13 - 0	15 - 11	18 - 6
	Douglas Fir-Larch	No.3	6 - 2	9 - 1	11 - 6	14 - 1	16 - 3	5 - 4	7 - 10	10 - 0	12 - 2	14 - 1
	Hem-Fir	SS	6 - 10	10 - 9	14 - 2	18 - 0	21 - 11	6 - 10	10 - 9	14 - 2	18 - 0	21 - 11
	Hem-Fir	No.1	6 - 8	10 - 6	13 - 10	17 - 8	21 - 6	6 - 8	10 - 6	13 - 7	16 - 7	19 - 3
	Hem-Fir	No.2	6 - 4	10 - 0	13 - 2	16 - 10	20 - 6	6 - 4	10 - 0	12 - 8	15 - 6	17 - 11
	Hem-Fir	No.3	6 - 1	8 - 10	11 - 3	13 - 8	15 - 11	5 - 3	7 - 8	9 - 9	11 - 10	13 - 9
	Southern Pine	SS	7 - 1	11 - 2	14 - 8	18 - 9	22 - 10	7 - 1	11 - 2	14 - 8	18 - 9	22 - 10
	Southern Pine	No.1	6 - 10	10 - 9	14 - 2	18 - 0	21 - 11	6 - 10	10 - 9	14 - 0	16 - 5	19 - 6
	Southern Pine	No.2	6 - 6	10 - 3	13 - 6	16 - 6	19 - 6	6 - 4	9 - 6	12 - 1	14 - 4	16 - 10
	Southern Pine	No.3	5 - 8	8 - 4	10 - 6	12 - 9	15 - 1	4 - 11	7 - 3	9 - 1	11 - 0	13 - 1
	Spruce-Pine Fir	SS	6 - 8	10 - 6	13 - 10	17 - 8	21 - 6	6 - 8	10 - 6	13 - 10	17 - 8	21 - 6
	Spruce-Pine Fir	No.1	6 - 6	10 - 3	13 - 6	17 - 3	21 - 0	6 - 6	10 - 2	12 - 10	15 - 8	18 - 3
	Spruce-Pine Fir	No.2	6 - 6	10 - 3	13 - 6	17 - 3	21 - 0	6 - 6	10 - 2	12 - 10	15 - 8	18 - 3
24	Spruce-Pine Fir	No.3	6 - 1	8 - 10	11 - 3	13 - 8	15 - 11	5 - 3	7 - 8	9 - 9	11 - 10	13 - 9

† Spans are limited to 26 feet in length.

See footnotes 1-3.

Copyright © American Wood Council. Downloaded/printed pursuant to License Agreement. No reproduction or transfer authorized.

Footnotes to Tables 3.26A, B and C

1 Tabulated rafter spans assume ceiling joists or rafter ties are located at the bottom of the attic space to resist thrust. When ceiling joists or rafter ties are located higher in the attic space and are used to resist thrust, the rafter spans shall be reduced using the factors given in the following table:

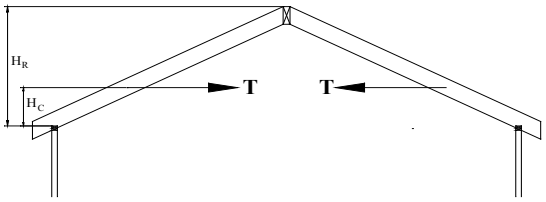

Ceiling Height/Top Plate-to-Roof Ridge Height (H_C/H_R)	Rafter Span Adjustment Factors
1/2	0.58
1/3	0.67
1/4	0.76
1/5	0.83
1/6	0.90
1/7.5 and less	1.00

Note: Lateral deflection of the rafter below the rafter ties may exceed 3/4 inch when rafter ties are located above one-third of the top plate-to- roof ridge height, H_R, or when H_c is greater than 2 feet and may require additional consideration.

2 Tabulated rafter spans in Tables 3.26A, B and C shall be permitted to be multiplied by the sloped roof adjustment factors in the following table for roof pitches greater than 4:12:

	10 psf Dead	20 psf Dead
Roof Pitch	**Adjustment Factor For Sloped Roofs**	
5:12	1.02	1.01
6:12	1.04	1.03
7:12	1.05	1.04
8:12	1.07	1.05
9:12	1.10	1.07
10:12	1.12	1.08
11:12	1.14	1.10
12:12	1.17	1.12

3 Spans checked for live load deflection only.

Copyright © American Wood Council. Downloaded/printed pursuant to License Agreement. No reproduction or transfer authorized.

Table 3.26D Rafter Spans for Common Lumber Species

(Ceiling Not Attached to Rafters)

Ground Snow Load = 30 psf, L/Δ_{LL} = 180

GSL = 30 psf
L/Δ_{LL} = 180

			Dead Load = 10 psf					Dead Load = 20 psf				
			2x4	2x6	2x8	2x10	2x12	2x4	2x6	2x8	2x10	2x12
			Maximum Rafter Spans[1,2]									
Joist Spacing (in.)	Species	Grade	(ft-in.)	(ft-in.)	(ft-in.)	(ft-in.)	(ft-in.)	(ft-in.)	(ft-in.)	(ft-in.)	(ft-in.)	(ft-in.)
12	Douglas Fir-Larch	SS	10 - 0	15 - 9	20-0†	20-0†	20-0†	10 - 0	15 - 9	20-0†	20-0†	20-0†
	Douglas Fir-Larch	No.1	9 - 8	14 - 9	18 - 8	20-0†	20-0†	9 - 0	13 - 2	16 - 8	20-0†	20-0†
	Douglas Fir-Larch	No.2	9 - 6	14 - 0	17 - 8	20-0†	20-0†	8 - 6	12 - 6	15 - 10	19 - 4	20-0†
	Douglas Fir-Larch	No.3	7 - 3	10 - 8	13 - 6	16 - 6	19 - 2	6 - 6	9 - 6	12 - 1	14 - 9	17 - 1
	Hem-Fir	SS	9 - 6	14 - 10	19 - 7	20-0†	20-0†	9 - 6	14 - 10	19 - 7	20-0†	20-0†
	Hem-Fir	No.1	9 - 3	14 - 6	18 - 5	20-0†	20-0†	8 - 11	13 - 0	16 - 6	20-0†	20-0†
	Hem-Fir	No.2	8 - 10	13 - 7	17 - 2	20-0†	20-0†	8 - 4	12 - 2	15 - 4	18 - 9	20-0†
	Hem-Fir	No.3	7 - 1	10 - 5	13 - 2	16 - 1	18 - 8	6 - 4	9 - 4	11 - 9	14 - 5	16 - 8
	Southern Pine	SS	9 - 10	15 - 6	20-0†	20-0†	20-0†	9 - 10	15 - 6	20-0†	20-0†	20-0†
	Southern Pine	No.1	9 - 6	14 - 10	19 - 0	20-0†	20-0†	9 - 0	13 - 5	17 - 0	19 - 11	20-0†
	Southern Pine	No.2	8 - 7	12 - 11	16 - 4	19 - 5	20-0†	7 - 8	11 - 7	14 - 8	17 - 4	20-0†
	Southern Pine	No.3	6 - 7	9 - 9	12 - 4	15 - 0	17 - 9	5 - 11	8 - 9	11 - 0	13 - 5	15 - 10
	Spruce-Pine Fir	SS	9 - 3	14 - 7	19 - 2	20-0†	20-0†	9 - 3	14 - 7	18 - 8	20-0†	20-0†
	Spruce-Pine Fir	No.1	9 - 1	13 - 9	17 - 5	20-0†	20-0†	8 - 5	12 - 4	15 - 7	19 - 1	20-0†
	Spruce-Pine Fir	No.2	9 - 1	13 - 9	17 - 5	20-0†	20-0†	8 - 5	12 - 4	15 - 7	19 - 1	20-0†
	Spruce-Pine Fir	No.3	7 - 1	10 - 5	13 - 2	16 - 1	18 - 8	6 - 4	9 - 4	11 - 9	14 - 5	16 - 8
16	Douglas Fir-Larch	SS	9 - 1	14 - 4	18 - 10	20-0†	20-0†	9 - 1	14 - 0	17 - 8	20-0†	20-0†
	Douglas Fir-Larch	No.1	8 - 9	12 - 9	16 - 2	19 - 9	20-0†	7 - 10	11 - 5	14 - 5	17 - 8	20-0†
	Douglas Fir-Larch	No.2	8 - 3	12 - 1	15 - 4	18 - 9	20-0†	7 - 5	10 - 10	13 - 8	16 - 9	19 - 5
	Douglas Fir-Larch	No.3	6 - 4	9 - 3	11 - 8	14 - 3	16 - 7	5 - 8	8 - 3	10 - 6	12 - 9	14 - 10
	Hem-Fir	SS	8 - 7	13 - 6	17 - 10	20-0†	20-0†	8 - 7	13 - 6	17 - 1	20-0†	20-0†
	Hem-Fir	No.1	8 - 5	12 - 7	15 - 11	19 - 6	20-0†	7 - 8	11 - 3	14 - 3	17 - 5	20-0†
	Hem-Fir	No.2	8 - 0	11 - 9	14 - 11	18 - 2	20-0†	7 - 2	10 - 6	13 - 4	16 - 3	18 - 10
	Hem-Fir	No.3	6 - 2	9 - 0	11 - 5	13 - 11	16 - 2	5 - 6	8 - 1	10 - 3	12 - 6	14 - 6
	Southern Pine	SS	8 - 11	14 - 1	18 - 6	20-0†	20-0†	8 - 11	14 - 1	18 - 5	20-0†	20-0†
	Southern Pine	No.1	8 - 7	13 - 0	16 - 6	19 - 3	20-0†	7 - 10	11 - 7	14 - 9	17 - 3	20-0†
	Southern Pine	No.2	7 - 6	11 - 2	14 - 2	16 - 10	19 - 10	6 - 8	10 - 0	12 - 8	15 - 1	17 - 9
	Southern Pine	No.3	5 - 9	8 - 6	10 - 8	13 - 0	15 - 4	5 - 2	7 - 7	9 - 7	11 - 7	13 - 9
	Spruce-Pine Fir	SS	8 - 5	13 - 3	17 - 5	20-0†	20-0†	8 - 5	12 - 9	16 - 2	19 - 9	20-0†
	Spruce-Pine Fir	No.1	8 - 2	11 - 11	15 - 1	18 - 5	20-0†	7 - 3	10 - 8	13 - 6	16 - 6	19 - 2
	Spruce-Pine Fir	No.2	8 - 2	11 - 11	15 - 1	18 - 5	20-0†	7 - 3	10 - 8	13 - 6	16 - 6	19 - 2
	Spruce-Pine Fir	No.3	6 - 2	9 - 0	11 - 5	13 - 11	16 - 2	5 - 6	8 - 1	10 - 3	12 - 6	14 - 6
19.2	Douglas Fir-Larch	SS	8 - 7	13 - 6	17 - 9	20-0†	20-0†	8 - 7	12 - 9	16 - 2	19 - 9	20-0†
	Douglas Fir-Larch	No.1	8 - 0	11 - 8	14 - 9	18 - 0	20-0†	7 - 1	10 - 5	13 - 2	16 - 1	18 - 8
	Douglas Fir-Larch	No.2	7 - 7	11 - 0	14 - 0	17 - 1	19 - 10	6 - 9	9 - 10	12 - 6	15 - 3	17 - 9
	Douglas Fir-Larch	No.3	5 - 9	8 - 5	10 - 8	13 - 1	15 - 2	5 - 2	7 - 7	9 - 7	11 - 8	13 - 6
	Hem-Fir	SS	8 - 1	12 - 9	16 - 9	20-0†	20-0†	8 - 1	12 - 4	15 - 7	19 - 1	20-0†
	Hem-Fir	No.1	7 - 10	11 - 6	14 - 7	17 - 9	20-0†	7 - 0	10 - 3	13 - 0	15 - 11	18 - 5
	Hem-Fir	No.2	7 - 4	10 - 9	13 - 7	16 - 7	19 - 3	6 - 7	9 - 7	12 - 2	14 - 10	17 - 3
	Hem-Fir	No.3	5 - 8	8 - 3	10 - 5	12 - 9	14 - 9	5 - 0	7 - 4	9 - 4	11 - 5	13 - 2
	Southern Pine	SS	8 - 5	13 - 3	17 - 5	20-0†	20-0†	8 - 5	13 - 3	16 - 10	20-0†	20-0†
	Southern Pine	No.1	8 - 0	11 - 10	15 - 1	17 - 7	20-0†	7 - 1	10 - 7	13 - 5	15 - 9	18 - 8
	Southern Pine	No.2	6 - 10	10 - 2	12 - 11	15 - 4	18 - 1	6 - 1	9 - 2	11 - 7	13 - 9	16 - 2
	Southern Pine	No.3	5 - 3	7 - 9	9 - 9	11 - 10	14 - 0	4 - 8	6 - 11	8 - 9	10 - 7	12 - 6
	Spruce-Pine Fir	SS	7 - 11	12 - 5	16 - 5	20-0†	20-0†	7 - 11	11 - 8	14 - 9	18 - 0	20-0†
	Spruce-Pine Fir	No.1	7 - 5	10 - 11	13 - 9	16 - 10	19 - 6	6 - 8	9 - 9	12 - 4	15 - 1	17 - 6
	Spruce-Pine Fir	No.2	7 - 5	10 - 11	13 - 9	16 - 10	19 - 6	6 - 8	9 - 9	12 - 4	15 - 1	17 - 6
	Spruce-Pine Fir	No.3	5 - 8	8 - 3	10 - 5	12 - 9	14 - 9	5 - 0	7 - 4	9 - 4	11 - 5	13 - 2
24	Douglas Fir-Larch	SS	8 - 0	12 - 6	16 - 2	19 - 9	20-0†	7 - 10	11 - 5	14 - 5	17 - 8	20-0†
	Douglas Fir-Larch	No.1	7 - 1	10 - 5	13 - 2	16 - 1	18 - 8	6 - 4	9 - 4	11 - 9	14 - 5	16 - 8
	Douglas Fir-Larch	No.2	6 - 9	9 - 10	12 - 6	15 - 3	17 - 9	6 - 0	8 - 10	11 - 2	13 - 8	15 - 10
	Douglas Fir-Larch	No.3	5 - 2	7 - 7	9 - 7	11 - 8	13 - 6	4 - 7	6 - 9	8 - 7	10 - 5	12 - 1
	Hem-Fir	SS	7 - 6	11 - 10	15 - 7	19 - 1	20-0†	7 - 6	11 - 0	14 - 0	17 - 1	19 - 9
	Hem-Fir	No.1	7 - 0	10 - 3	13 - 0	15 - 11	18 - 5	6 - 3	9 - 2	11 - 8	14 - 3	16 - 6
	Hem-Fir	No.2	6 - 7	9 - 7	12 - 2	14 - 10	17 - 3	5 - 10	8 - 7	10 - 10	13 - 3	15 - 5
	Hem-Fir	No.3	5 - 0	7 - 4	9 - 4	11 - 5	13 - 2	4 - 6	6 - 7	8 - 4	10 - 2	11 - 10
	Southern Pine	SS	7 - 10	12 - 3	16 - 2	20-0†	20-0†	7 - 10	11 - 10	15 - 0	17 - 11	20-0†
	Southern Pine	No.1	7 - 1	10 - 7	13 - 5	15 - 9	18 - 8	6 - 4	9 - 6	12 - 0	14 - 1	16 - 8
	Southern Pine	No.2	6 - 1	9 - 2	11 - 7	13 - 9	16 - 2	5 - 5	8 - 2	10 - 4	12 - 3	14 - 6
	Southern Pine	No.3	4 - 8	6 - 11	8 - 9	10 - 7	12 - 6	4 - 2	6 - 2	7 - 10	9 - 6	11 - 2
	Spruce-Pine Fir	SS	7 - 4	11 - 7	14 - 9	18 - 0	20-0†	7 - 1	10 - 5	13 - 2	16 - 1	18 - 8
	Spruce-Pine Fir	No.1	6 - 8	9 - 9	12 - 4	15 - 1	17 - 6	6 - 0	8 - 9	11 - 0	13 - 6	15 - 7
	Spruce-Pine Fir	No.2	6 - 8	9 - 9	12 - 4	15 - 1	17 - 6	6 - 0	8 - 9	11 - 0	13 - 6	15 - 7
	Spruce-Pine Fir	No.3	5 - 0	7 - 4	9 - 4	11 - 5	13 - 2	4 - 6	6 - 7	8 - 4	10 - 2	11 - 10

† Spans are limited to 20 feet in length.

See footnotes 1-2.

Copyright © American Wood Council. Downloaded/printed pursuant to License Agreement. No reproduction or transfer authorized.

Table 3.26E Rafter Spans for Common Lumber Species

(Ceiling Attached to Rafters) Ground Snow Load = 30 psf, L/Δ_{LL} = 240, Flexible Finish (including gypsum board)

GSL = 30 psf
L/Δ_{LL} = 240

			Dead Load = 10 psf					Dead Load = 20 psf				
			2x4	2x6	2x8	2x10	2x12	2x4	2x6	2x8	2x10	2x12
			Maximum Rafter Spans[1,2]									
Joist Spacing (in.)	Species	Grade	(ft-in.)	(ft-in.)	(ft-in.)	(ft-in.)	(ft-in.)	(ft-in.)	(ft-in.)	(ft-in.)	(ft-in.)	(ft-in.)
12	Douglas Fir-Larch	SS	9 - 1	14 - 4	18 - 10	20-0†	20-0†	9 - 1	14 - 4	18 - 10	20-0†	20-0†
	Douglas Fir-Larch	No.1	8 - 9	13 - 9	18 - 2	20-0†	20-0†	8 - 9	13 - 2	16 - 8	20-0†	20-0†
	Douglas Fir-Larch	No.2	8 - 7	13 - 6	17 - 8	20-0†	20-0†	8 - 6	12 - 6	15 - 10	19 - 4	20-0†
	Douglas Fir-Larch	No.3	7 - 3	10 - 8	13 - 6	16 - 6	19 - 2	6 - 6	9 - 6	12 - 1	14 - 9	17 - 1
	Hem-Fir	SS	8 - 7	13 - 6	17 - 10	20-0†	20-0†	8 - 7	13 - 6	17 - 10	20-0†	20-0†
	Hem-Fir	No.1	8 - 5	13 - 3	17 - 5	20-0†	20-0†	8 - 5	13 - 0	16 - 6	20-0†	20-0†
	Hem-Fir	No.2	8 - 0	12 - 7	16 - 7	20-0†	20-0†	8 - 0	12 - 2	15 - 4	18 - 9	20-0†
	Hem-Fir	No.3	7 - 1	10 - 5	13 - 2	16 - 1	18 - 8	6 - 4	9 - 4	11 - 9	14 - 5	16 - 8
	Southern Pine	SS	8 - 11	14 - 1	18 - 6	20-0†	20-0†	8 - 11	14 - 1	18 - 6	20-0†	20-0†
	Southern Pine	No.1	8 - 7	13 - 6	17 - 10	20-0†	20-0†	8 - 7	13 - 5	17 - 0	19 - 11	20-0†
	Southern Pine	No.2	8 - 3	12 - 11	16 - 4	19 - 5	20-0†	7 - 8	11 - 7	14 - 8	17 - 4	20-0†
	Southern Pine	No.3	6 - 7	9 - 9	12 - 4	15 - 0	17 - 9	5 - 11	8 - 9	11 - 0	13 - 5	15 - 10
	Spruce-Pine Fir	SS	8 - 5	13 - 3	17 - 5	20-0†	20-0†	8 - 5	13 - 3	17 - 5	20-0†	20-0†
	Spruce-Pine Fir	No.1	8 - 3	12 - 11	17 - 0	20-0†	20-0†	8 - 3	12 - 4	15 - 7	19 - 1	20-0†
	Spruce-Pine Fir	No.2	8 - 3	12 - 11	17 - 0	20-0†	20-0†	8 - 3	12 - 4	15 - 7	19 - 1	20-0†
	Spruce-Pine Fir	No.3	7 - 1	10 - 5	13 - 2	16 - 1	18 - 8	6 - 4	9 - 4	11 - 9	14 - 5	16 - 8
16	Douglas Fir-Larch	SS	8 - 3	13 - 0	17 - 2	20-0†	20-0†	8 - 3	13 - 0	17 - 2	20-0†	20-0†
	Douglas Fir-Larch	No.1	8 - 0	12 - 6	16 - 2	19 - 9	20-0†	7 - 10	11 - 5	14 - 5	17 - 8	20-0†
	Douglas Fir-Larch	No.2	7 - 10	12 - 1	15 - 4	18 - 9	20-0†	7 - 5	10 - 10	13 - 8	16 - 9	19 - 5
	Douglas Fir-Larch	No.3	6 - 4	9 - 3	11 - 8	14 - 3	16 - 7	5 - 8	8 - 3	10 - 6	12 - 9	14 - 10
	Hem-Fir	SS	7 - 10	12 - 3	16 - 2	20-0†	20-0†	7 - 10	12 - 3	16 - 2	20-0†	20-0†
	Hem-Fir	No.1	7 - 8	12 - 0	15 - 10	19 - 6	20-0†	7 - 8	11 - 3	14 - 3	17 - 5	20-0†
	Hem-Fir	No.2	7 - 3	11 - 5	14 - 11	18 - 2	20-0†	7 - 2	10 - 6	13 - 4	16 - 3	18 - 10
	Hem-Fir	No.3	6 - 2	9 - 0	11 - 5	13 - 11	16 - 2	5 - 6	8 - 1	10 - 3	12 - 6	14 - 6
	Southern Pine	SS	8 - 1	12 - 9	16 - 10	20-0†	20-0†	8 - 1	12 - 9	16 - 10	20-0†	20-0†
	Southern Pine	No.1	7 - 10	12 - 3	16 - 2	19 - 3	20-0†	7 - 10	11 - 7	14 - 9	17 - 3	20-0†
	Southern Pine	No.2	7 - 6	11 - 2	14 - 2	16 - 10	19 - 10	6 - 8	10 - 0	12 - 8	15 - 1	17 - 9
	Southern Pine	No.3	5 - 9	8 - 6	10 - 8	13 - 0	15 - 4	5 - 2	7 - 7	9 - 7	11 - 7	13 - 9
	Spruce-Pine Fir	SS	7 - 8	12 - 0	15 - 10	20-0†	20-0†	7 - 8	12 - 0	15 - 10	19 - 9	20-0†
	Spruce-Pine Fir	No.1	7 - 6	11 - 9	15 - 1	18 - 5	20-0†	7 - 3	10 - 8	13 - 6	16 - 6	19 - 2
	Spruce-Pine Fir	No.2	7 - 6	11 - 9	15 - 1	18 - 5	20-0†	7 - 3	10 - 8	13 - 6	16 - 6	19 - 2
	Spruce-Pine Fir	No.3	6 - 2	9 - 0	11 - 5	13 - 11	16 - 2	5 - 6	8 - 1	10 - 3	12 - 6	14 - 6
19.2	Douglas Fir-Larch	SS	7 - 9	12 - 3	16 - 1	20-0†	20-0†	7 - 9	12 - 3	16 - 1	19 - 9	20-0†
	Douglas Fir-Larch	No.1	7 - 6	11 - 8	14 - 9	18 - 0	20-0†	7 - 1	10 - 5	13 - 2	16 - 1	18 - 8
	Douglas Fir-Larch	No.2	7 - 4	11 - 0	14 - 0	17 - 1	19 - 10	6 - 9	9 - 10	12 - 6	15 - 3	17 - 9
	Douglas Fir-Larch	No.3	5 - 9	8 - 5	10 - 8	13 - 1	15 - 2	5 - 2	7 - 7	9 - 7	11 - 8	13 - 6
	Hem-Fir	SS	7 - 4	11 - 7	15 - 3	19 - 5	20-0†	7 - 4	11 - 7	15 - 3	19 - 1	20-0†
	Hem-Fir	No.1	7 - 2	11 - 4	14 - 7	17 - 9	20-0†	7 - 0	10 - 3	13 - 0	15 - 11	18 - 5
	Hem-Fir	No.2	6 - 10	10 - 9	13 - 7	16 - 7	19 - 3	6 - 7	9 - 7	12 - 2	14 - 10	17 - 3
	Hem-Fir	No.3	5 - 8	8 - 3	10 - 5	12 - 9	14 - 9	5 - 0	7 - 4	9 - 4	11 - 5	13 - 2
	Southern Pine	SS	7 - 8	12 - 0	15 - 10	20-0†	20-0†	7 - 8	12 - 0	15 - 10	20-0†	20-0†
	Southern Pine	No.1	7 - 4	11 - 7	15 - 1	17 - 7	20-0†	7 - 1	10 - 7	13 - 5	15 - 9	18 - 8
	Southern Pine	No.2	6 - 10	10 - 2	12 - 11	15 - 4	18 - 1	6 - 1	9 - 2	11 - 7	13 - 9	16 - 2
	Southern Pine	No.3	5 - 3	7 - 9	9 - 9	11 - 10	14 - 0	4 - 8	6 - 11	8 - 9	10 - 7	12 - 6
	Spruce-Pine Fir	SS	7 - 2	11 - 4	14 - 11	19 - 0	20-0†	7 - 2	11 - 4	14 - 9	18 - 0	20-0†
	Spruce-Pine Fir	No.1	7 - 0	10 - 11	13 - 9	16 - 10	19 - 6	6 - 8	9 - 9	12 - 4	15 - 1	17 - 6
	Spruce-Pine Fir	No.2	7 - 0	10 - 11	13 - 9	16 - 10	19 - 6	6 - 8	9 - 9	12 - 4	15 - 1	17 - 6
	Spruce-Pine Fir	No.3	5 - 8	8 - 3	10 - 5	12 - 9	14 - 9	5 - 0	7 - 4	9 - 4	11 - 5	13 - 2
24	Douglas Fir-Larch	SS	7 - 3	11 - 4	15 - 0	19 - 1	20-0†	7 - 3	11 - 4	14 - 5	17 - 8	20-0†
	Douglas Fir-Larch	No.1	7 - 0	10 - 5	13 - 2	16 - 1	18 - 8	6 - 4	9 - 4	11 - 9	14 - 5	16 - 8
	Douglas Fir-Larch	No.2	6 - 9	9 - 10	12 - 6	15 - 3	17 - 9	6 - 0	8 - 10	11 - 2	13 - 8	15 - 10
	Douglas Fir-Larch	No.3	5 - 2	7 - 7	9 - 7	11 - 8	13 - 6	4 - 7	6 - 9	8 - 7	10 - 5	12 - 1
	Hem-Fir	SS	6 - 10	10 - 9	14 - 2	18 - 0	20-0†	6 - 10	10 - 9	14 - 0	17 - 1	19 - 9
	Hem-Fir	No.1	6 - 8	10 - 3	13 - 0	15 - 11	18 - 5	6 - 3	9 - 2	11 - 8	14 - 3	16 - 6
	Hem-Fir	No.2	6 - 4	9 - 7	12 - 2	14 - 10	17 - 3	5 - 10	8 - 7	10 - 10	13 - 3	15 - 5
	Hem-Fir	No.3	5 - 0	7 - 4	9 - 4	11 - 5	13 - 2	4 - 6	6 - 7	8 - 4	10 - 2	11 - 10
	Southern Pine	SS	7 - 1	11 - 2	14 - 8	18 - 9	20-0†	7 - 1	11 - 2	14 - 8	17 - 11	20-0†
	Southern Pine	No.1	6 - 10	10 - 7	13 - 5	15 - 9	18 - 8	6 - 4	9 - 6	12 - 0	14 - 1	16 - 8
	Southern Pine	No.2	6 - 1	9 - 2	11 - 7	13 - 9	16 - 2	5 - 5	8 - 2	10 - 4	12 - 3	14 - 6
	Southern Pine	No.3	4 - 8	6 - 11	8 - 9	10 - 7	12 - 6	4 - 2	6 - 2	7 - 10	9 - 6	11 - 2
	Spruce-Pine Fir	SS	6 - 8	10 - 6	13 - 10	17 - 8	20-0†	6 - 8	10 - 5	13 - 2	16 - 1	18 - 8
	Spruce-Pine Fir	No.1	6 - 6	9 - 9	12 - 4	15 - 1	17 - 6	6 - 0	8 - 9	11 - 0	13 - 6	15 - 7
	Spruce-Pine Fir	No.2	6 - 6	9 - 9	12 - 4	15 - 1	17 - 6	6 - 0	8 - 9	11 - 0	13 - 6	15 - 7
	Spruce-Pine Fir	No.3	5 - 0	7 - 4	9 - 4	11 - 5	13 - 2	4 - 6	6 - 7	8 - 4	10 - 2	11 - 10

† Spans are limited to 20 feet in length.

See footnotes 1-2.

Copyright © American Wood Council. Downloaded/printed pursuant to License Agreement. No reproduction or transfer authorized.

Table 3.26F Rafter Spans for Common Lumber Species

(Ceiling Attached to Rafters) Ground Snow Load = 30 psf, L/Δ_{LL} = 360, Brittle Finish (including plaster and stucco)

GSL = 30 psf
L/Δ_{LL} = 360

			Dead Load = 10 psf					Dead Load = 20 psf				
			2x4	2x6	2x8	2x10	2x12	2x4	2x6	2x8	2x10	2x12
			Maximum Rafter Spans[1,2]									
Joist Spacing (in.)	Species	Grade	(ft-in.)	(ft-in.)	(ft-in.)	(ft-in.)	(ft-in.)	(ft-in.)	(ft-in.)	(ft-in.)	(ft-in.)	(ft-in.)
12	Douglas Fir-Larch	SS	8 - 0	12 - 6	16 - 6	20-0†	20-0†	8 - 0	12 - 6	16 - 6	20-0†	20-0†
	Douglas Fir-Larch	No.1	7 - 8	12 - 0	15 - 10	20-0†	20-0†	7 - 8	12 - 0	15 - 10	20-0†	20-0†
	Douglas Fir-Larch	No.2	7 - 6	11 - 10	15 - 7	19 - 10	20-0†	7 - 6	11 - 10	15 - 7	19 - 4	20-0†
	Douglas Fir-Larch	No.3	7 - 2	10 - 8	13 - 6	16 - 6	19 - 2	6 - 6	9 - 6	12 - 1	14 - 9	17 - 1
	Hem-Fir	SS	7 - 6	11 - 10	15 - 7	19 - 10	20-0†	7 - 6	11 - 10	15 - 7	19 - 10	20-0†
	Hem-Fir	No.1	7 - 4	11 - 7	15 - 3	19 - 5	20-0†	7 - 4	11 - 7	15 - 3	19 - 5	20-0†
	Hem-Fir	No.2	7 - 0	11 - 0	14 - 6	18 - 6	20-0†	7 - 0	11 - 0	14 - 6	18 - 6	20-0†
	Hem-Fir	No.3	6 - 10	10 - 5	13 - 2	16 - 1	18 - 8	6 - 4	9 - 4	11 - 9	14 - 5	16 - 8
	Southern Pine	SS	7 - 10	12 - 3	16 - 2	20-0†	20-0†	7 - 10	12 - 3	16 - 2	20-0†	20-0†
	Southern Pine	No.1	7 - 6	11 - 10	15 - 7	19 - 10	20-0†	7 - 6	11 - 10	15 - 7	19 - 10	20-0†
	Southern Pine	No.2	7 - 2	11 - 3	14 - 11	19 - 0	20-0†	7 - 2	11 - 3	14 - 8	17 - 4	20-0†
	Southern Pine	No.3	6 - 7	9 - 9	12 - 4	15 - 0	17 - 9	5 - 11	8 - 9	11 - 0	13 - 5	15 - 10
	Spruce-Pine Fir	SS	7 - 4	11 - 7	15 - 3	19 - 5	20-0†	7 - 4	11 - 7	15 - 3	19 - 5	20-0†
	Spruce-Pine Fir	No.1	7 - 2	11 - 3	14 - 11	19 - 0	20-0†	7 - 2	11 - 3	14 - 11	19 - 0	20-0†
	Spruce-Pine Fir	No.2	7 - 2	11 - 3	14 - 11	19 - 0	20-0†	7 - 2	11 - 3	14 - 11	19 - 0	20-0†
	Spruce-Pine Fir	No.3	6 - 10	10 - 5	13 - 2	16 - 1	18 - 8	6 - 4	9 - 4	11 - 9	14 - 5	16 - 8
16	Douglas Fir-Larch	SS	7 - 3	11 - 4	15 - 0	19 - 1	20-0†	7 - 3	11 - 4	15 - 0	19 - 1	20-0†
	Douglas Fir-Larch	No.1	7 - 0	10 - 11	14 - 5	18 - 5	20-0†	7 - 0	10 - 11	14 - 5	17 - 8	20-0†
	Douglas Fir-Larch	No.2	6 - 10	10 - 9	14 - 2	18 - 0	20-0†	6 - 10	10 - 9	13 - 8	16 - 9	19 - 5
	Douglas Fir-Larch	No.3	6 - 4	9 - 3	11 - 8	14 - 3	16 - 7	5 - 8	8 - 3	10 - 6	12 - 9	14 - 10
	Hem-Fir	SS	6 - 10	10 - 9	14 - 2	18 - 0	20-0†	6 - 10	10 - 9	14 - 2	18 - 0	20-0†
	Hem-Fir	No.1	6 - 8	10 - 6	13 - 10	17 - 8	20-0†	6 - 8	10 - 6	13 - 10	17 - 5	20-0†
	Hem-Fir	No.2	6 - 4	10 - 0	13 - 2	16 - 10	20-0†	6 - 4	10 - 0	13 - 2	16 - 3	18 - 10
	Hem-Fir	No.3	6 - 2	9 - 0	11 - 5	13 - 11	16 - 2	5 - 6	8 - 1	10 - 3	12 - 6	14 - 6
	Southern Pine	SS	7 - 1	11 - 2	14 - 8	18 - 9	20-0†	7 - 1	11 - 2	14 - 8	18 - 9	20-0†
	Southern Pine	No.1	6 - 10	10 - 9	14 - 2	18 - 0	20-0†	6 - 10	10 - 9	14 - 2	17 - 3	20-0†
	Southern Pine	No.2	6 - 6	10 - 3	13 - 6	16 - 10	19 - 10	6 - 6	10 - 0	12 - 8	15 - 1	17 - 9
	Southern Pine	No.3	5 - 9	8 - 6	10 - 8	13 - 0	15 - 4	5 - 2	7 - 7	9 - 7	11 - 7	13 - 9
	Spruce-Pine Fir	SS	6 - 8	10 - 6	13 - 10	17 - 8	20-0†	6 - 8	10 - 6	13 - 10	17 - 8	20-0†
	Spruce-Pine Fir	No.1	6 - 6	10 - 3	13 - 6	17 - 3	20-0†	6 - 6	10 - 3	13 - 6	16 - 6	19 - 2
	Spruce-Pine Fir	No.2	6 - 6	10 - 3	13 - 6	17 - 3	20-0†	6 - 6	10 - 3	13 - 6	16 - 6	19 - 2
	Spruce-Pine Fir	No.3	6 - 2	9 - 0	11 - 5	13 - 11	16 - 2	5 - 6	8 - 1	10 - 3	12 - 6	14 - 6
19.2	Douglas Fir-Larch	SS	6 - 10	10 - 8	14 - 1	18 - 0	20-0†	6 - 10	10 - 8	14 - 1	18 - 0	20-0†
	Douglas Fir-Larch	No.1	6 - 7	10 - 4	13 - 7	17 - 4	20-0†	6 - 7	10 - 4	13 - 2	16 - 1	18 - 8
	Douglas Fir-Larch	No.2	6 - 5	10 - 1	13 - 4	17 - 0	19 - 10	6 - 5	9 - 10	12 - 6	15 - 3	17 - 9
	Douglas Fir-Larch	No.3	5 - 9	8 - 5	10 - 8	13 - 1	15 - 2	5 - 2	7 - 7	9 - 7	11 - 8	13 - 6
	Hem-Fir	SS	6 - 5	10 - 1	13 - 4	17 - 0	20-0†	6 - 5	10 - 1	13 - 4	17 - 0	20-0†
	Hem-Fir	No.1	6 - 3	9 - 10	13 - 0	16 - 7	20-0†	6 - 3	9 - 10	13 - 0	15 - 11	18 - 5
	Hem-Fir	No.2	6 - 0	9 - 5	12 - 5	15 - 10	19 - 3	6 - 0	9 - 5	12 - 2	14 - 10	17 - 3
	Hem-Fir	No.3	5 - 8	8 - 3	10 - 5	12 - 9	14 - 9	5 - 0	7 - 4	9 - 4	11 - 5	13 - 2
	Southern Pine	SS	6 - 8	10 - 6	13 - 10	17 - 8	20-0†	6 - 8	10 - 6	13 - 10	17 - 8	20-0†
	Southern Pine	No.1	6 - 5	10 - 1	13 - 4	17 - 0	20-0†	6 - 5	10 - 1	13 - 4	15 - 9	18 - 8
	Southern Pine	No.2	6 - 2	9 - 8	12 - 9	15 - 4	18 - 1	6 - 1	9 - 2	11 - 7	13 - 9	16 - 2
	Southern Pine	No.3	5 - 3	7 - 9	9 - 9	11 - 10	14 - 0	4 - 8	6 - 11	8 - 9	10 - 7	12 - 6
	Spruce-Pine Fir	SS	6 - 3	9 - 10	13 - 0	16 - 7	20-0†	6 - 3	9 - 10	13 - 0	16 - 7	20-0†
	Spruce-Pine Fir	No.1	6 - 2	9 - 8	12 - 9	16 - 3	19 - 6	6 - 2	9 - 8	12 - 4	15 - 1	17 - 6
	Spruce-Pine Fir	No.2	6 - 2	9 - 8	12 - 9	16 - 3	19 - 6	6 - 2	9 - 8	12 - 4	15 - 1	17 - 6
	Spruce-Pine Fir	No.3	5 - 8	8 - 3	10 - 5	12 - 9	14 - 9	5 - 0	7 - 4	9 - 4	11 - 5	13 - 2
24	Douglas Fir-Larch	SS	6 - 4	9 - 11	13 - 1	16 - 8	20-0†	6 - 4	9 - 11	13 - 1	16 - 8	20-0†
	Douglas Fir-Larch	No.1	6 - 1	9 - 7	12 - 7	16 - 1	18 - 8	6 - 1	9 - 4	11 - 9	14 - 5	16 - 8
	Douglas Fir-Larch	No.2	6 - 0	9 - 4	12 - 4	15 - 3	17 - 9	6 - 0	8 - 10	11 - 2	13 - 8	15 - 10
	Douglas Fir-Larch	No.3	5 - 2	7 - 7	9 - 7	11 - 8	13 - 6	4 - 7	6 - 9	8 - 7	10 - 5	12 - 1
	Hem-Fir	SS	6 - 0	9 - 4	12 - 4	15 - 9	19 - 2	6 - 0	9 - 4	12 - 4	15 - 9	19 - 2
	Hem-Fir	No.1	5 - 10	9 - 2	12 - 1	15 - 5	18 - 5	5 - 10	9 - 2	11 - 8	14 - 3	16 - 6
	Hem-Fir	No.2	5 - 7	8 - 9	11 - 6	14 - 8	17 - 3	5 - 7	8 - 7	10 - 10	13 - 3	15 - 5
	Hem-Fir	No.3	5 - 0	7 - 4	9 - 4	11 - 5	13 - 2	4 - 6	6 - 7	8 - 4	10 - 2	11 - 10
	Southern Pine	SS	6 - 2	9 - 9	12 - 10	16 - 5	19 - 11	6 - 2	9 - 9	12 - 10	16 - 5	19 - 11
	Southern Pine	No.1	6 - 0	9 - 4	12 - 4	15 - 9	18 - 8	6 - 0	9 - 4	12 - 0	14 - 1	16 - 8
	Southern Pine	No.2	5 - 8	9 - 0	11 - 7	13 - 9	16 - 2	5 - 5	8 - 2	10 - 4	12 - 3	14 - 6
	Southern Pine	No.3	4 - 8	6 - 11	8 - 9	10 - 7	12 - 6	4 - 2	6 - 2	7 - 10	9 - 6	11 - 2
	Spruce-Pine Fir	SS	5 - 10	9 - 2	12 - 1	15 - 5	18 - 9	5 - 10	9 - 2	12 - 1	15 - 5	18 - 8
	Spruce-Pine Fir	No.1	5 - 8	9 - 0	11 - 10	15 - 1	17 - 6	5 - 8	8 - 9	11 - 0	13 - 6	15 - 7
	Spruce-Pine Fir	No.2	5 - 8	9 - 0	11 - 10	15 - 1	17 - 6	5 - 8	8 - 9	11 - 0	13 - 6	15 - 7
	Spruce-Pine Fir	No.3	5 - 0	7 - 4	9 - 4	11 - 5	13 - 2	4 - 6	6 - 7	8 - 4	10 - 2	11 - 10

† Spans are limited to 20 feet in length.

See footnotes 1-2.

Copyright © American Wood Council. Downloaded/printed pursuant to License Agreement. No reproduction or transfer authorized.

Table 3.26G Rafter Spans for Common Lumber Species

(Ceiling Not Attached to Rafters)

Ground Snow Load = 50 psf, L/Δ_{LL} = 180

GSL = 50 psf
L/Δ_{LL} = 180

			Dead Load = 10 psf					Dead Load = 20 psf				
			2x4	2x6	2x8	2x10	2x12	2x4	2x6	2x8	2x10	2x12
			Maximum Rafter Spans[1,2]									
Joist Spacing (in.)	Species	Grade	(ft-in.)	(ft-in.)	(ft-in.)	(ft-in.)	(ft-in.)	(ft-in.)	(ft-in.)	(ft-in.)	(ft-in.)	(ft-in.)
12	Douglas Fir-Larch	SS	8 - 5	13 - 3	17 - 6	20-0†	20-0†	8 - 5	13 - 3	17 - 3	20-0†	20-0†
	Douglas Fir-Larch	No.1	8 - 2	12 - 0	15 - 3	18 - 7	20-0†	7 - 7	11 - 2	14 - 1	17 - 3	20 - 0
	Douglas Fir-Larch	No.2	7 - 10	11 - 5	14 - 5	17 - 8	20-0†	7 - 3	10 - 7	13 - 4	16 - 4	18 - 11
	Douglas Fir-Larch	No.3	6 - 0	8 - 9	11 - 0	13 - 6	15 - 7	5 - 6	8 - 1	10 - 3	12 - 6	14 - 6
	Hem-Fir	SS	8 - 0	12 - 6	16 - 6	20-0†	20-0†	8 - 0	12 - 6	16 - 6	20-0†	20-0†
	Hem-Fir	No.1	7 - 10	11 - 10	15 - 0	18 - 4	20-0†	7 - 6	11 - 0	13 - 11	17 - 0	19 - 9
	Hem-Fir	No.2	7 - 5	11 - 1	14 - 0	17 - 2	19 - 11	7 - 0	10 - 3	13 - 0	15 - 10	18 - 5
	Hem-Fir	No.3	5 - 10	8 - 6	10 - 9	13 - 2	15 - 3	5 - 5	7 - 10	10 - 0	12 - 2	14 - 1
	Southern Pine	SS	8 - 4	13 - 1	17 - 2	20-0†	20-0†	8 - 4	13 - 1	17 - 2	20-0†	20-0†
	Southern Pine	No.1	8 - 0	12 - 3	15 - 6	18 - 2	20-0†	7 - 7	11 - 4	14 - 5	16 - 10	20 - 0
	Southern Pine	No.2	7 - 0	10 - 6	13 - 4	15 - 10	18 - 8	6 - 6	9 - 9	12 - 4	14 - 8	17 - 3
	Southern Pine	No.3	5 - 5	8 - 0	10 - 1	12 - 3	14 - 6	5 - 0	7 - 5	9 - 4	11 - 4	13 - 5
	Spruce-Pine Fir	SS	7 - 10	12 - 3	16 - 2	20-0†	20-0†	7 - 10	12 - 3	15 - 9	19 - 3	20-0†
	Spruce-Pine Fir	No.1	7 - 8	11 - 3	14 - 3	17 - 5	20-0†	7 - 1	10 - 5	13 - 2	16 - 1	18 - 8
	Spruce-Pine Fir	No.2	7 - 8	11 - 3	14 - 3	17 - 5	20-0†	7 - 1	10 - 5	13 - 2	16 - 1	18 - 8
	Spruce-Pine Fir	No.3	5 - 10	8 - 6	10 - 9	13 - 2	15 - 3	5 - 5	7 - 10	10 - 0	12 - 2	14 - 1
16	Douglas Fir-Larch	SS	7 - 8	12 - 1	15 - 11	19 - 9	20-0†	7 - 8	11 - 10	14 - 11	18 - 3	20-0†
	Douglas Fir-Larch	No.1	7 - 1	10 - 5	13 - 2	16 - 1	18 - 8	6 - 7	9 - 8	12 - 2	14 - 11	17 - 3
	Douglas Fir-Larch	No.2	6 - 9	9 - 10	12 - 6	15 - 3	17 - 9	6 - 3	9 - 2	11 - 7	14 - 2	16 - 5
	Douglas Fir-Larch	No.3	5 - 2	7 - 7	9 - 7	11 - 8	13 - 6	4 - 9	7 - 0	8 - 10	10 - 10	12 - 6
	Hem-Fir	SS	7 - 3	11 - 5	15 - 0	19 - 1	20-0†	7 - 3	11 - 5	14 - 5	17 - 8	20-0†
	Hem-Fir	No.1	7 - 0	10 - 3	13 - 0	15 - 11	18 - 5	6 - 6	9 - 6	12 - 1	14 - 9	17 - 1
	Hem-Fir	No.2	6 - 7	9 - 7	12 - 2	14 - 10	17 - 3	6 - 1	8 - 11	11 - 3	13 - 9	15 - 11
	Hem-Fir	No.3	5 - 0	7 - 4	9 - 4	11 - 5	13 - 2	4 - 8	6 - 10	8 - 8	10 - 7	12 - 3
	Southern Pine	SS	7 - 6	11 - 10	15 - 7	19 - 11	20-0†	7 - 6	11 - 10	15 - 7	18 - 6	20-0†
	Southern Pine	No.1	7 - 1	10 - 7	13 - 5	15 - 9	18 - 8	6 - 7	9 - 10	12 - 5	14 - 7	17 - 3
	Southern Pine	No.2	6 - 1	9 - 2	11 - 7	13 - 9	16 - 2	5 - 8	8 - 5	10 - 9	12 - 9	15 - 0
	Southern Pine	No.3	4 - 8	6 - 11	8 - 9	10 - 7	12 - 6	4 - 4	6 - 5	8 - 1	9 - 10	11 - 7
	Spruce-Pine Fir	SS	7 - 1	11 - 2	14 - 8	18 - 0	20-0†	7 - 1	10 - 9	13 - 8	16 - 8	19 - 4
	Spruce-Pine Fir	No.1	6 - 8	9 - 9	12 - 4	15 - 1	17 - 6	6 - 2	9 - 0	11 - 5	13 - 11	16 - 2
	Spruce-Pine Fir	No.2	6 - 8	9 - 9	12 - 4	15 - 1	17 - 6	6 - 2	9 - 0	11 - 5	13 - 11	16 - 2
	Spruce-Pine Fir	No.3	5 - 0	7 - 4	9 - 4	11 - 5	13 - 2	4 - 8	6 - 10	8 - 8	10 - 7	12 - 3
19.2	Douglas Fir-Larch	SS	7 - 3	11 - 4	14 - 9	18 - 0	20-0†	7 - 3	10 - 9	13 - 8	16 - 8	19 - 4
	Douglas Fir-Larch	No.1	6 - 6	9 - 6	12 - 0	14 - 8	17 - 1	6 - 0	8 - 10	11 - 2	13 - 7	15 - 9
	Douglas Fir-Larch	No.2	6 - 2	9 - 0	11 - 5	13 - 11	16 - 2	5 - 8	8 - 4	10 - 7	12 - 11	15 - 0
	Douglas Fir-Larch	No.3	4 - 8	6 - 11	8 - 9	10 - 8	12 - 4	4 - 4	6 - 4	8 - 1	9 - 10	11 - 5
	Hem-Fir	SS	6 - 10	10 - 9	14 - 2	17 - 5	20-0†	6 - 10	10 - 5	13 - 2	16 - 1	18 - 8
	Hem-Fir	No.1	6 - 5	9 - 5	11 - 11	14 - 6	16 - 10	5 - 11	8 - 8	11 - 0	13 - 5	15 - 7
	Hem-Fir	No.2	6 - 0	8 - 9	11 - 1	13 - 7	15 - 9	5 - 7	8 - 1	10 - 3	12 - 7	14 - 7
	Hem-Fir	No.3	4 - 7	6 - 9	8 - 6	10 - 5	12 - 1	4 - 3	6 - 3	7 - 11	9 - 7	11 - 2
	Southern Pine	SS	7 - 1	11 - 2	14 - 8	18 - 3	20-0†	7 - 1	11 - 2	14 - 2	16 - 11	20 - 0
	Southern Pine	No.1	6 - 6	9 - 8	12 - 3	14 - 4	17 - 1	6 - 0	9 - 0	11 - 4	13 - 4	15 - 9
	Southern Pine	No.2	5 - 7	8 - 4	10 - 7	12 - 6	14 - 9	5 - 2	7 - 9	9 - 9	11 - 7	13 - 8
	Southern Pine	No.3	4 - 3	6 - 4	8 - 0	9 - 8	11 - 5	4 - 0	5 - 10	7 - 4	8 - 11	10 - 7
	Spruce-Pine Fir	SS	6 - 8	10 - 6	13 - 5	16 - 5	19 - 1	6 - 8	9 - 10	12 - 5	15 - 3	17 - 8
	Spruce-Pine Fir	No.1	6 - 1	8 - 11	11 - 3	13 - 9	15 - 11	5 - 8	8 - 3	10 - 5	12 - 9	14 - 9
	Spruce-Pine Fir	No.2	6 - 1	8 - 11	11 - 3	13 - 9	15 - 11	5 - 8	8 - 3	10 - 5	12 - 9	14 - 9
	Spruce-Pine Fir	No.3	4 - 7	6 - 9	8 - 6	10 - 5	12 - 1	4 - 3	6 - 3	7 - 11	9 - 7	11 - 2
24	Douglas Fir-Larch	SS	6 - 8	10 - 5	13 - 2	16 - 1	18 - 8	6 - 7	9 - 8	12 - 2	14 - 11	17 - 3
	Douglas Fir-Larch	No.1	5 - 10	8 - 6	10 - 9	13 - 2	15 - 3	5 - 5	7 - 10	10 - 0	12 - 2	14 - 1
	Douglas Fir-Larch	No.2	5 - 6	8 - 1	10 - 3	12 - 6	14 - 6	5 - 1	7 - 6	9 - 5	11 - 7	13 - 5
	Douglas Fir-Larch	No.3	4 - 3	6 - 2	7 - 10	9 - 6	11 - 1	3 - 11	5 - 8	7 - 3	8 - 10	10 - 3
	Hem-Fir	SS	6 - 4	10 - 0	12 - 9	15 - 7	18 - 0	6 - 4	9 - 4	11 - 9	14 - 5	16 - 8
	Hem-Fir	No.1	5 - 9	8 - 5	10 - 8	13 - 0	15 - 1	5 - 4	7 - 9	9 - 10	12 - 0	13 - 11
	Hem-Fir	No.2	5 - 4	7 - 10	9 - 11	12 - 1	14 - 1	5 - 0	7 - 3	9 - 2	11 - 3	13 - 0
	Hem-Fir	No.3	4 - 1	6 - 0	7 - 7	9 - 4	10 - 9	3 - 10	5 - 7	7 - 1	8 - 7	10 - 0
	Southern Pine	SS	6 - 7	10 - 4	13 - 8	16 - 4	19 - 3	6 - 7	10 - 0	12 - 8	15 - 2	17 - 10
	Southern Pine	No.1	5 - 10	8 - 8	11 - 0	12 - 10	15 - 3	5 - 5	8 - 0	10 - 2	11 - 11	14 - 1
	Southern Pine	No.2	5 - 0	7 - 5	9 - 5	11 - 3	13 - 2	4 - 7	6 - 11	8 - 9	10 - 5	12 - 3
	Southern Pine	No.3	3 - 10	5 - 8	7 - 1	8 - 8	10 - 3	3 - 6	5 - 3	6 - 7	8 - 0	9 - 6
	Spruce-Pine Fir	SS	6 - 2	9 - 6	12 - 0	14 - 8	17 - 1	6 - 0	8 - 10	11 - 2	13 - 7	15 - 9
	Spruce-Pine Fir	No.1	5 - 5	8 - 0	10 - 1	12 - 4	14 - 3	5 - 0	7 - 4	9 - 4	11 - 5	13 - 2
	Spruce-Pine Fir	No.2	5 - 5	8 - 0	10 - 1	12 - 4	14 - 3	5 - 0	7 - 4	9 - 4	11 - 5	13 - 2
	Spruce-Pine Fir	No.3	4 - 1	6 - 0	7 - 7	9 - 4	10 - 9	3 - 10	5 - 7	7 - 1	8 - 7	10 - 0

† Spans are limited to 20 feet in length.

See footnotes 1-2.

Copyright © American Wood Council. Downloaded/printed pursuant to License Agreement. No reproduction or transfer authorized.

Table 3.26H Rafter Spans for Common Lumber Species

(Ceiling Attached to Rafters) Ground Snow Load = 50 psf, L/Δ_{LL} = 240, Flexible Finish (including gypsum board)

GSL = 50 psf
L/Δ_{LL} = 240

			Dead Load = 10 psf					Dead Load = 20 psf				
			2x4	2x6	2x8	2x10	2x12	2x4	2x6	2x8	2x10	2x12
			Maximum Rafter Spans[1,2]									
Joist Spacing (in.)	Species	Grade	(ft-in.)	(ft-in.)	(ft-in.)	(ft-in.)	(ft-in.)	(ft-in.)	(ft-in.)	(ft-in.)	(ft-in.)	(ft-in.)
12	Douglas Fir-Larch	SS	7 - 8	12 - 1	15 - 11	20-0†	20-0†	7 - 8	12 - 1	15 - 11	20-0†	20-0†
	Douglas Fir-Larch	No.1	7 - 5	11 - 8	15 - 3	18 - 7	20-0†	7 - 5	11 - 2	14 - 1	17 - 3	20 - 0
	Douglas Fir-Larch	No.2	7 - 3	11 - 5	14 - 5	17 - 8	20-0†	7 - 3	10 - 7	13 - 4	16 - 4	18 - 11
	Douglas Fir-Larch	No.3	6 - 0	8 - 9	11 - 0	13 - 6	15 - 7	5 - 6	8 - 1	10 - 3	12 - 6	14 - 6
	Hem-Fir	SS	7 - 3	11 - 5	15 - 0	19 - 2	20-0†	7 - 3	11 - 5	15 - 0	19 - 2	20-0†
	Hem-Fir	No.1	7 - 1	11 - 2	14 - 8	18 - 4	20-0†	7 - 1	11 - 0	13 - 11	17 - 0	19 - 9
	Hem-Fir	No.2	6 - 9	10 - 8	14 - 0	17 - 2	19 - 11	6 - 9	10 - 3	13 - 0	15 - 10	18 - 5
	Hem-Fir	No.3	5 - 10	8 - 6	10 - 9	13 - 2	15 - 3	5 - 5	7 - 10	10 - 0	12 - 2	14 - 1
	Southern Pine	SS	7 - 6	11 - 10	15 - 7	19 - 11	20-0†	7 - 6	11 - 10	15 - 7	19 - 11	20-0†
	Southern Pine	No.1	7 - 3	11 - 5	15 - 0	18 - 2	20-0†	7 - 3	11 - 4	14 - 5	16 - 10	20 - 0
	Southern Pine	No.2	6 - 11	10 - 6	13 - 4	15 - 10	18 - 8	6 - 6	9 - 9	12 - 4	14 - 8	17 - 3
	Southern Pine	No.3	5 - 5	8 - 0	10 - 1	12 - 3	14 - 6	5 - 0	7 - 5	9 - 4	11 - 4	13 - 5
	Spruce-Pine Fir	SS	7 - 1	11 - 2	14 - 8	18 - 9	20-0†	7 - 1	11 - 2	14 - 8	18 - 9	20-0†
	Spruce-Pine Fir	No.1	6 - 11	10 - 11	14 - 3	17 - 5	20-0†	6 - 11	10 - 5	13 - 2	16 - 1	18 - 8
	Spruce-Pine Fir	No.2	6 - 11	10 - 11	14 - 3	17 - 5	20-0†	6 - 11	10 - 5	13 - 2	16 - 1	18 - 8
	Spruce-Pine Fir	No.3	5 - 10	8 - 6	10 - 9	13 - 2	15 - 3	5 - 5	7 - 10	10 - 0	12 - 2	14 - 1
16	Douglas Fir-Larch	SS	7 - 0	11 - 0	14 - 5	18 - 5	20-0†	7 - 0	11 - 0	14 - 5	18 - 3	20-0†
	Douglas Fir-Larch	No.1	6 - 9	10 - 5	13 - 2	16 - 1	18 - 8	6 - 7	9 - 8	12 - 2	14 - 11	17 - 3
	Douglas Fir-Larch	No.2	6 - 7	9 - 10	12 - 6	15 - 3	17 - 9	6 - 3	9 - 2	11 - 7	14 - 2	16 - 5
	Douglas Fir-Larch	No.3	5 - 2	7 - 7	9 - 7	11 - 8	13 - 6	4 - 9	7 - 0	8 - 10	10 - 10	12 - 6
	Hem-Fir	SS	6 - 7	10 - 4	13 - 8	17 - 5	20-0†	6 - 7	10 - 4	13 - 8	17 - 5	20-0†
	Hem-Fir	No.1	6 - 5	10 - 2	13 - 0	15 - 11	18 - 5	6 - 5	9 - 6	12 - 1	14 - 9	17 - 1
	Hem-Fir	No.2	6 - 2	9 - 7	12 - 2	14 - 10	17 - 3	6 - 1	8 - 11	11 - 3	13 - 9	15 - 11
	Hem-Fir	No.3	5 - 0	7 - 4	9 - 4	11 - 5	13 - 2	4 - 8	6 - 10	8 - 8	10 - 7	12 - 3
	Southern Pine	SS	6 - 10	10 - 9	14 - 2	18 - 1	20-0†	6 - 10	10 - 9	14 - 2	18 - 1	20-0†
	Southern Pine	No.1	6 - 7	10 - 4	13 - 5	15 - 9	18 - 8	6 - 7	9 - 10	12 - 5	14 - 7	17 - 3
	Southern Pine	No.2	6 - 1	9 - 2	11 - 7	13 - 9	16 - 2	5 - 8	8 - 5	10 - 9	12 - 9	15 - 0
	Southern Pine	No.3	4 - 8	6 - 11	8 - 9	10 - 7	12 - 6	4 - 4	6 - 5	8 - 1	9 - 10	11 - 7
	Spruce-Pine Fir	SS	6 - 5	10 - 2	13 - 4	17 - 0	20-0†	6 - 5	10 - 2	13 - 4	16 - 8	19 - 4
	Spruce-Pine Fir	No.1	6 - 4	9 - 9	12 - 4	15 - 1	17 - 6	6 - 2	9 - 0	11 - 5	13 - 11	16 - 2
	Spruce-Pine Fir	No.2	6 - 4	9 - 9	12 - 4	15 - 1	17 - 6	6 - 2	9 - 0	11 - 5	13 - 11	16 - 2
	Spruce-Pine Fir	No.3	5 - 0	7 - 4	9 - 4	11 - 5	13 - 2	4 - 8	6 - 10	8 - 8	10 - 7	12 - 3
19.2	Douglas Fir-Larch	SS	6 - 7	10 - 4	13 - 7	17 - 4	20-0†	6 - 7	10 - 4	13 - 7	16 - 8	19 - 4
	Douglas Fir-Larch	No.1	6 - 4	9 - 6	12 - 0	14 - 8	17 - 1	6 - 0	8 - 10	11 - 2	13 - 7	15 - 9
	Douglas Fir-Larch	No.2	6 - 2	9 - 0	11 - 5	13 - 11	16 - 2	5 - 8	8 - 4	10 - 7	12 - 11	15 - 0
	Douglas Fir-Larch	No.3	4 - 8	6 - 11	8 - 9	10 - 8	12 - 4	4 - 4	6 - 4	8 - 1	9 - 10	11 - 5
	Hem-Fir	SS	6 - 2	9 - 9	12 - 10	16 - 5	19 - 11	6 - 2	9 - 9	12 - 10	16 - 1	18 - 8
	Hem-Fir	No.1	6 - 1	9 - 5	11 - 11	14 - 6	16 - 10	5 - 11	8 - 8	11 - 0	13 - 5	15 - 7
	Hem-Fir	No.2	5 - 9	8 - 9	11 - 1	13 - 7	15 - 9	5 - 7	8 - 1	10 - 3	12 - 7	14 - 7
	Hem-Fir	No.3	4 - 7	6 - 9	8 - 6	10 - 5	12 - 1	4 - 3	6 - 3	7 - 11	9 - 7	11 - 2
	Southern Pine	SS	6 - 5	10 - 2	13 - 4	17 - 0	20-0†	6 - 5	10 - 2	13 - 4	16 - 11	20 - 0
	Southern Pine	No.1	6 - 2	9 - 8	12 - 3	14 - 4	17 - 1	6 - 0	9 - 0	11 - 4	13 - 4	15 - 9
	Southern Pine	No.2	5 - 7	8 - 4	10 - 7	12 - 6	14 - 9	5 - 2	7 - 9	9 - 9	11 - 7	13 - 8
	Southern Pine	No.3	4 - 3	6 - 4	8 - 0	9 - 8	11 - 5	4 - 0	5 - 10	7 - 4	8 - 11	10 - 7
	Spruce-Pine Fir	SS	6 - 1	9 - 6	12 - 7	16 - 0	19 - 1	6 - 1	9 - 6	12 - 5	15 - 3	17 - 8
	Spruce-Pine Fir	No.1	5 - 11	8 - 11	11 - 3	13 - 9	15 - 11	5 - 8	8 - 3	10 - 5	12 - 9	14 - 9
	Spruce-Pine Fir	No.2	5 - 11	8 - 11	11 - 3	13 - 9	15 - 11	5 - 8	8 - 3	10 - 5	12 - 9	14 - 9
	Spruce-Pine Fir	No.3	4 - 7	6 - 9	8 - 6	10 - 5	12 - 1	4 - 3	6 - 3	7 - 11	9 - 7	11 - 2
24	Douglas Fir-Larch	SS	6 - 1	9 - 7	12 - 7	16 - 1	18 - 8	6 - 1	9 - 7	12 - 2	14 - 11	17 - 3
	Douglas Fir-Larch	No.1	5 - 10	8 - 6	10 - 9	13 - 2	15 - 3	5 - 5	7 - 10	10 - 0	12 - 2	14 - 1
	Douglas Fir-Larch	No.2	5 - 6	8 - 1	10 - 3	12 - 6	14 - 6	5 - 1	7 - 6	9 - 5	11 - 7	13 - 5
	Douglas Fir-Larch	No.3	4 - 3	6 - 2	7 - 10	9 - 6	11 - 1	3 - 11	5 - 8	7 - 3	8 - 10	10 - 3
	Hem-Fir	SS	5 - 9	9 - 1	11 - 11	15 - 2	18 - 0	5 - 9	9 - 1	11 - 9	14 - 5	16 - 8
	Hem-Fir	No.1	5 - 8	8 - 5	10 - 8	13 - 0	15 - 1	5 - 4	7 - 9	9 - 10	12 - 0	13 - 11
	Hem-Fir	No.2	5 - 4	7 - 10	9 - 11	12 - 1	14 - 1	5 - 0	7 - 3	9 - 2	11 - 3	13 - 0
	Hem-Fir	No.3	4 - 1	6 - 0	7 - 7	9 - 4	10 - 9	3 - 10	5 - 7	7 - 1	8 - 7	10 - 0
	Southern Pine	SS	6 - 0	9 - 5	12 - 5	15 - 10	19 - 3	6 - 0	9 - 5	12 - 5	15 - 2	17 - 10
	Southern Pine	No.1	5 - 9	8 - 8	11 - 0	12 - 10	15 - 3	5 - 5	8 - 0	10 - 2	11 - 11	14 - 1
	Southern Pine	No.2	5 - 0	7 - 5	9 - 5	11 - 3	13 - 2	4 - 7	6 - 11	8 - 9	10 - 5	12 - 3
	Southern Pine	No.3	3 - 10	5 - 8	7 - 1	8 - 8	10 - 3	3 - 6	5 - 3	6 - 7	8 - 0	9 - 6
	Spruce-Pine Fir	SS	5 - 8	8 - 10	11 - 8	14 - 8	17 - 1	5 - 8	8 - 10	11 - 2	13 - 7	15 - 9
	Spruce-Pine Fir	No.1	5 - 5	8 - 0	10 - 1	12 - 4	14 - 3	5 - 0	7 - 4	9 - 4	11 - 5	13 - 2
	Spruce-Pine Fir	No.2	5 - 5	8 - 0	10 - 1	12 - 4	14 - 3	5 - 0	7 - 4	9 - 4	11 - 5	13 - 2
	Spruce-Pine Fir	No.3	4 - 1	6 - 0	7 - 7	9 - 4	10 - 9	3 - 10	5 - 7	7 - 1	8 - 7	10 - 0

† Spans are limited to 20 feet in length.

See footnotes 1-2.

Copyright © American Wood Council. Downloaded/printed pursuant to License Agreement. No reproduction or transfer authorized.

Table 3.26I Rafter Spans for Common Lumber Species

(Ceiling Attached to Rafters) Ground Snow Load = 50 psf, L/Δ_{LL} = 360, Brittle Finish (including plaster and stucco)

GSL = 50 psf
L/Δ_{LL} = 360

			Dead Load = 10 psf					Dead Load = 20 psf				
			2x4	2x6	2x8	2x10	2x12	2x4	2x6	2x8	2x10	2x12
			Maximum Rafter Spans[1,2]									
Joist Spacing (in.)	Species	Grade	(ft-in.)	(ft-in.)	(ft-in.)	(ft-in.)	(ft-in.)	(ft-in.)	(ft-in.)	(ft-in.)	(ft-in.)	(ft-in.)
12	Douglas Fir-Larch	SS	6 - 8	10 - 6	13 - 11	17 - 9	20-0†	6 - 8	10 - 6	13 - 11	17 - 9	20-0†
	Douglas Fir-Larch	No.1	6 - 6	10 - 2	13 - 5	17 - 1	20-0†	6 - 6	10 - 2	13 - 5	17 - 1	20 - 0
	Douglas Fir-Larch	No.2	6 - 4	10 - 0	13 - 1	16 - 9	20-0†	6 - 4	10 - 0	13 - 1	16 - 4	18 - 11
	Douglas Fir-Larch	No.3	6 - 0	8 - 9	11 - 0	13 - 6	15 - 7	5 - 6	8 - 1	10 - 3	12 - 6	14 - 6
	Hem-Fir	SS	6 - 4	10 - 0	13 - 1	16 - 9	20-0†	6 - 4	10 - 0	13 - 1	16 - 9	20-0†
	Hem-Fir	No.1	6 - 2	9 - 9	12 - 10	16 - 5	19 - 11	6 - 2	9 - 9	12 - 10	16 - 5	19 - 9
	Hem-Fir	No.2	5 - 11	9 - 3	12 - 3	15 - 7	19 - 0	5 - 11	9 - 3	12 - 3	15 - 7	18 - 5
	Hem-Fir	No.3	5 - 9	8 - 6	10 - 9	13 - 2	15 - 3	5 - 5	7 - 10	10 - 0	12 - 2	14 - 1
	Southern Pine	SS	6 - 7	10 - 4	13 - 8	17 - 5	20-0†	6 - 7	10 - 4	13 - 8	17 - 5	20-0†
	Southern Pine	No.1	6 - 4	10 - 0	13 - 1	16 - 9	20-0†	6 - 4	10 - 0	13 - 1	16 - 9	20 - 0
	Southern Pine	No.2	6 - 1	9 - 6	12 - 7	15 - 10	18 - 8	6 - 1	9 - 6	12 - 4	14 - 8	17 - 3
	Southern Pine	No.3	5 - 5	8 - 0	10 - 1	12 - 3	14 - 6	5 - 0	7 - 5	9 - 4	11 - 4	13 - 5
	Spruce-Pine Fir	SS	6 - 2	9 - 9	12 - 10	16 - 5	19 - 11	6 - 2	9 - 9	12 - 10	16 - 5	19 - 11
	Spruce-Pine Fir	No.1	6 - 1	9 - 6	12 - 7	16 - 0	19 - 6	6 - 1	9 - 6	12 - 7	16 - 0	18 - 8
	Spruce-Pine Fir	No.2	6 - 1	9 - 6	12 - 7	16 - 0	19 - 6	6 - 1	9 - 6	12 - 7	16 - 0	18 - 8
	Spruce-Pine Fir	No.3	5 - 9	8 - 6	10 - 9	13 - 2	15 - 3	5 - 5	7 - 10	10 - 0	12 - 2	14 - 1
16	Douglas Fir-Larch	SS	6 - 1	9 - 7	12 - 7	16 - 1	19 - 7	6 - 1	9 - 7	12 - 7	16 - 1	19 - 7
	Douglas Fir-Larch	No.1	5 - 10	9 - 3	12 - 2	15 - 6	18 - 8	5 - 10	9 - 3	12 - 2	14 - 11	17 - 3
	Douglas Fir-Larch	No.2	5 - 9	9 - 1	11 - 11	15 - 2	17 - 9	5 - 9	9 - 1	11 - 7	14 - 2	16 - 5
	Douglas Fir-Larch	No.3	5 - 2	7 - 7	9 - 7	11 - 8	13 - 6	4 - 9	7 - 0	8 - 10	10 - 10	12 - 6
	Hem-Fir	SS	5 - 9	9 - 1	11 - 11	15 - 2	18 - 6	5 - 9	9 - 1	11 - 11	15 - 2	18 - 6
	Hem-Fir	No.1	5 - 8	8 - 10	11 - 8	14 - 11	18 - 1	5 - 8	8 - 10	11 - 8	14 - 9	17 - 1
	Hem-Fir	No.2	5 - 4	8 - 5	11 - 1	14 - 2	17 - 3	5 - 4	8 - 5	11 - 1	13 - 9	15 - 11
	Hem-Fir	No.3	5 - 0	7 - 4	9 - 4	11 - 5	13 - 2	4 - 8	6 - 10	8 - 8	10 - 7	12 - 3
	Southern Pine	SS	6 - 0	9 - 5	12 - 5	15 - 10	19 - 3	6 - 0	9 - 5	12 - 5	15 - 10	19 - 3
	Southern Pine	No.1	5 - 9	9 - 1	11 - 11	15 - 2	18 - 6	5 - 9	9 - 1	11 - 11	14 - 7	17 - 3
	Southern Pine	No.2	5 - 6	8 - 8	11 - 5	13 - 9	16 - 2	5 - 6	8 - 5	10 - 9	12 - 9	15 - 0
	Southern Pine	No.3	4 - 8	6 - 11	8 - 9	10 - 7	12 - 6	4 - 4	6 - 5	8 - 1	9 - 10	11 - 7
	Spruce-Pine Fir	SS	5 - 8	8 - 10	11 - 8	14 - 11	18 - 1	5 - 8	8 - 10	11 - 8	14 - 11	18 - 1
	Spruce-Pine Fir	No.1	5 - 6	8 - 8	11 - 5	14 - 7	17 - 6	5 - 6	8 - 8	11 - 5	13 - 11	16 - 2
	Spruce-Pine Fir	No.2	5 - 6	8 - 8	11 - 5	14 - 7	17 - 6	5 - 6	8 - 8	11 - 5	13 - 11	16 - 2
	Spruce-Pine Fir	No.3	5 - 0	7 - 4	9 - 4	11 - 5	13 - 2	4 - 8	6 - 10	8 - 8	10 - 7	12 - 3
19.2	Douglas Fir-Larch	SS	5 - 9	9 - 0	11 - 11	15 - 2	18 - 5	5 - 9	9 - 0	11 - 11	15 - 2	18 - 5
	Douglas Fir-Larch	No.1	5 - 6	8 - 8	11 - 5	14 - 7	17 - 1	5 - 6	8 - 8	11 - 2	13 - 7	15 - 9
	Douglas Fir-Larch	No.2	5 - 5	8 - 6	11 - 3	13 - 11	16 - 2	5 - 5	8 - 4	10 - 7	12 - 11	15 - 0
	Douglas Fir-Larch	No.3	4 - 8	6 - 11	8 - 9	10 - 8	12 - 4	4 - 4	6 - 4	8 - 1	9 - 10	11 - 5
	Hem-Fir	SS	5 - 5	8 - 6	11 - 3	14 - 4	17 - 5	5 - 5	8 - 6	11 - 3	14 - 4	17 - 5
	Hem-Fir	No.1	5 - 4	8 - 4	11 - 0	14 - 0	16 - 10	5 - 4	8 - 4	11 - 0	13 - 5	15 - 7
	Hem-Fir	No.2	5 - 1	7 - 11	10 - 6	13 - 4	15 - 9	5 - 1	7 - 11	10 - 3	12 - 7	14 - 7
	Hem-Fir	No.3	4 - 7	6 - 9	8 - 6	10 - 5	12 - 1	4 - 3	6 - 3	7 - 11	9 - 7	11 - 2
	Southern Pine	SS	5 - 8	8 - 10	11 - 8	14 - 11	18 - 1	5 - 8	8 - 10	11 - 8	14 - 11	18 - 1
	Southern Pine	No.1	5 - 5	8 - 6	11 - 3	14 - 4	17 - 1	5 - 5	8 - 6	11 - 3	13 - 4	15 - 9
	Southern Pine	No.2	5 - 2	8 - 2	10 - 7	12 - 6	14 - 9	5 - 2	7 - 9	9 - 9	11 - 7	13 - 8
	Southern Pine	No.3	4 - 3	6 - 4	8 - 0	9 - 8	11 - 5	4 - 0	5 - 10	7 - 4	8 - 11	10 - 7
	Spruce-Pine Fir	SS	5 - 4	8 - 4	11 - 0	14 - 0	17 - 0	5 - 4	8 - 4	11 - 0	14 - 0	17 - 0
	Spruce-Pine Fir	No.1	5 - 2	8 - 2	10 - 9	13 - 8	15 - 11	5 - 2	8 - 2	10 - 5	12 - 9	14 - 9
	Spruce-Pine Fir	No.2	5 - 2	8 - 2	10 - 9	13 - 8	15 - 11	5 - 2	8 - 2	10 - 5	12 - 9	14 - 9
	Spruce-Pine Fir	No.3	4 - 7	6 - 9	8 - 6	10 - 5	12 - 1	4 - 3	6 - 3	7 - 11	9 - 7	11 - 2
24	Douglas Fir-Larch	SS	5 - 4	8 - 4	11 - 0	14 - 1	17 - 1	5 - 4	8 - 4	11 - 0	14 - 1	17 - 1
	Douglas Fir-Larch	No.1	5 - 2	8 - 1	10 - 8	13 - 2	15 - 3	5 - 2	7 - 10	10 - 0	12 - 2	14 - 1
	Douglas Fir-Larch	No.2	5 - 0	7 - 11	10 - 3	12 - 6	14 - 6	5 - 0	7 - 6	9 - 5	11 - 7	13 - 5
	Douglas Fir-Larch	No.3	4 - 3	6 - 2	7 - 10	9 - 6	11 - 1	3 - 11	5 - 8	7 - 3	8 - 10	10 - 3
	Hem-Fir	SS	5 - 0	7 - 11	10 - 5	13 - 3	16 - 2	5 - 0	7 - 11	10 - 5	13 - 3	16 - 2
	Hem-Fir	No.1	4 - 11	7 - 9	10 - 2	13 - 0	15 - 1	4 - 11	7 - 9	9 - 10	12 - 0	13 - 11
	Hem-Fir	No.2	4 - 8	7 - 4	9 - 9	12 - 1	14 - 1	4 - 8	7 - 3	9 - 2	11 - 3	13 - 0
	Hem-Fir	No.3	4 - 1	6 - 0	7 - 7	9 - 4	10 - 9	3 - 10	5 - 7	7 - 1	8 - 7	10 - 0
	Southern Pine	SS	5 - 3	8 - 3	10 - 10	13 - 10	16 - 10	5 - 3	8 - 3	10 - 10	13 - 10	16 - 10
	Southern Pine	No.1	5 - 0	7 - 11	10 - 5	12 - 10	15 - 3	5 - 0	7 - 11	10 - 2	11 - 11	14 - 1
	Southern Pine	No.2	4 - 10	7 - 5	9 - 5	11 - 3	13 - 2	4 - 7	6 - 11	8 - 9	10 - 5	12 - 3
	Southern Pine	No.3	3 - 10	5 - 8	7 - 1	8 - 8	10 - 3	3 - 6	5 - 3	6 - 7	8 - 0	9 - 6
	Spruce-Pine Fir	SS	4 - 11	7 - 9	10 - 2	13 - 0	15 - 10	4 - 11	7 - 9	10 - 2	13 - 0	15 - 9
	Spruce-Pine Fir	No.1	4 - 10	7 - 7	10 - 0	12 - 4	14 - 3	4 - 10	7 - 4	9 - 4	11 - 5	13 - 2
	Spruce-Pine Fir	No.2	4 - 10	7 - 7	10 - 0	12 - 4	14 - 3	4 - 10	7 - 4	9 - 4	11 - 5	13 - 2
	Spruce-Pine Fir	No.3	4 - 1	6 - 0	7 - 7	9 - 4	10 - 9	3 - 10	5 - 7	7 - 1	8 - 7	10 - 0

† Spans are limited to 20 feet in length.

See footnotes 1-2.

Copyright © American Wood Council. Downloaded/printed pursuant to License Agreement. No reproduction or transfer authorized.

Table 3.26J Rafter Spans for Common Lumber Species

(Ceiling Not Attached to Rafters)

Ground Snow Load = 70 psf, L/Δ_{LL} = 180

GSL = 70 psf
L/Δ_{LL} = 180

			Dead Load = 10 psf					Dead Load = 20 psf				
			2x4	2x6	2x8	2x10	2x12	2x4	2x6	2x8	2x10	2x12
			Maximum Rafter Spans[1,2]									
Joist Spacing (in.)	Species	Grade	(ft-in.)	(ft-in.)	(ft-in.)	(ft-in.)	(ft-in.)	(ft-in.)	(ft-in.)	(ft-in.)	(ft-in.)	(ft-in.)
12	Douglas Fir-Larch	SS	7 - 7	11 - 10	15 - 8	19 - 9	20-0†	7 - 7	11 - 10	15 - 3	18 - 7	20-0†
	Douglas Fir-Larch	No.1	7 - 1	10 - 5	13 - 2	16 - 1	18 - 8	6 - 8	9 - 10	12 - 5	15 - 2	17 - 7
	Douglas Fir-Larch	No.2	6 - 9	9 - 10	12 - 6	15 - 3	17 - 9	6 - 4	9 - 4	11 - 9	14 - 5	16 - 8
	Douglas Fir-Larch	No.3	5 - 2	7 - 7	9 - 7	11 - 8	13 - 6	4 - 10	7 - 1	9 - 0	11 - 0	12 - 9
	Hem-Fir	SS	7 - 2	11 - 3	14 - 9	18 - 10	20-0†	7 - 2	11 - 3	14 - 8	18 - 0	20-0†
	Hem-Fir	No.1	7 - 0	10 - 3	13 - 0	15 - 11	18 - 5	6 - 7	9 - 8	12 - 3	15 - 0	17 - 5
	Hem-Fir	No.2	6 - 7	9 - 7	12 - 2	14 - 10	17 - 3	6 - 2	9 - 1	11 - 6	14 - 0	16 - 3
	Hem-Fir	No.3	5 - 0	7 - 4	9 - 4	11 - 5	13 - 2	4 - 9	6 - 11	8 - 9	10 - 9	12 - 5
	Southern Pine	SS	7 - 5	11 - 8	15 - 4	19 - 7	20-0†	7 - 5	11 - 8	15 - 4	18 - 10	20-0†
	Southern Pine	No.1	7 - 1	10 - 7	13 - 5	15 - 9	18 - 8	6 - 9	10 - 0	12 - 8	14 - 10	17 - 7
	Southern Pine	No.2	6 - 1	9 - 2	11 - 7	13 - 9	16 - 2	5 - 9	8 - 7	10 - 11	12 - 11	15 - 3
	Southern Pine	No.3	4 - 8	6 - 11	8 - 9	10 - 7	12 - 6	4 - 5	6 - 6	8 - 3	10 - 0	11 - 10
	Spruce-Pine Fir	SS	7 - 0	11 - 0	14 - 6	18 - 0	20-0†	7 - 0	11 - 0	13 - 11	17 - 0	19 - 8
	Spruce-Pine Fir	No.1	6 - 8	9 - 9	12 - 4	15 - 1	17 - 6	6 - 3	9 - 2	11 - 8	14 - 2	16 - 6
	Spruce-Pine Fir	No.2	6 - 8	9 - 9	12 - 4	15 - 1	17 - 6	6 - 3	9 - 2	11 - 8	14 - 2	16 - 6
	Spruce-Pine Fir	No.3	5 - 0	7 - 4	9 - 4	11 - 5	13 - 2	4 - 9	6 - 11	8 - 9	10 - 9	12 - 5
16	Douglas Fir-Larch	SS	6 - 10	10 - 9	14 - 0	17 - 1	19 - 10	6 - 10	10 - 5	13 - 2	16 - 1	18 - 8
	Douglas Fir-Larch	No.1	6 - 2	9 - 0	11 - 5	13 - 11	16 - 2	5 - 10	8 - 6	10 - 9	13 - 2	15 - 3
	Douglas Fir-Larch	No.2	5 - 10	8 - 7	10 - 10	13 - 3	15 - 4	5 - 6	8 - 1	10 - 3	12 - 6	14 - 6
	Douglas Fir-Larch	No.3	4 - 6	6 - 6	8 - 3	10 - 1	11 - 9	4 - 3	6 - 2	7 - 10	9 - 6	11 - 1
	Hem-Fir	SS	6 - 6	10 - 2	13 - 5	16 - 6	19 - 2	6 - 6	10 - 1	12 - 9	15 - 7	18 - 0
	Hem-Fir	No.1	6 - 1	8 - 11	11 - 3	13 - 9	16 - 0	5 - 9	8 - 5	10 - 8	13 - 0	15 - 1
	Hem-Fir	No.2	5 - 8	8 - 4	10 - 6	12 - 10	14 - 11	5 - 4	7 - 10	9 - 11	12 - 1	14 - 1
	Hem-Fir	No.3	4 - 4	6 - 4	8 - 1	9 - 10	11 - 5	4 - 1	6 - 0	7 - 7	9 - 4	10 - 9
	Southern Pine	SS	6 - 9	10 - 7	14 - 0	17 - 4	20-0†	6 - 9	10 - 7	13 - 9	16 - 4	19 - 3
	Southern Pine	No.1	6 - 2	9 - 2	11 - 8	13 - 8	16 - 2	5 - 10	8 - 8	11 - 0	12 - 10	15 - 3
	Southern Pine	No.2	5 - 3	7 - 11	10 - 0	11 - 11	14 - 0	5 - 0	7 - 5	9 - 5	11 - 3	13 - 2
	Southern Pine	No.3	4 - 1	6 - 0	7 - 7	9 - 2	10 - 10	3 - 10	5 - 8	7 - 1	8 - 8	10 - 3
	Spruce-Pine Fir	SS	6 - 4	10 - 0	12 - 9	15 - 7	18 - 1	6 - 4	9 - 6	12 - 0	14 - 8	17 - 1
	Spruce-Pine Fir	No.1	5 - 9	8 - 5	10 - 8	13 - 1	15 - 2	5 - 5	8 - 0	10 - 1	12 - 4	14 - 3
	Spruce-Pine Fir	No.2	5 - 9	8 - 5	10 - 8	13 - 1	15 - 2	5 - 5	8 - 0	10 - 1	12 - 4	14 - 3
	Spruce-Pine Fir	No.3	4 - 4	6 - 4	8 - 1	9 - 10	11 - 5	4 - 1	6 - 0	7 - 7	9 - 4	10 - 9
19.2	Douglas Fir-Larch	SS	6 - 6	10 - 1	12 - 9	15 - 7	18 - 1	6 - 6	9 - 6	12 - 0	14 - 8	17 - 1
	Douglas Fir-Larch	No.1	5 - 8	8 - 3	10 - 5	12 - 9	14 - 9	5 - 4	7 - 9	9 - 10	12 - 0	13 - 11
	Douglas Fir-Larch	No.2	5 - 4	7 - 10	9 - 11	12 - 1	14 - 0	5 - 0	7 - 4	9 - 4	11 - 5	13 - 2
	Douglas Fir-Larch	No.3	4 - 1	6 - 0	7 - 7	9 - 3	10 - 8	3 - 10	5 - 7	7 - 1	8 - 8	10 - 1
	Hem-Fir	SS	6 - 1	9 - 7	12 - 4	15 - 1	17 - 6	6 - 1	9 - 2	11 - 8	14 - 2	16 - 6
	Hem-Fir	No.1	5 - 7	8 - 2	10 - 3	12 - 7	14 - 7	5 - 3	7 - 8	9 - 8	11 - 10	13 - 9
	Hem-Fir	No.2	5 - 2	7 - 7	9 - 7	11 - 9	13 - 7	4 - 11	7 - 2	9 - 1	11 - 1	12 - 10
	Hem-Fir	No.3	4 - 0	5 - 10	7 - 4	9 - 0	10 - 5	3 - 9	5 - 6	6 - 11	8 - 6	9 - 10
	Southern Pine	SS	6 - 4	10 - 0	13 - 2	15 - 10	18 - 8	6 - 4	9 - 10	12 - 6	14 - 11	17 - 7
	Southern Pine	No.1	5 - 8	8 - 5	10 - 8	12 - 5	14 - 9	5 - 4	7 - 11	10 - 0	11 - 9	13 - 11
	Southern Pine	No.2	4 - 10	7 - 3	9 - 2	10 - 10	12 - 9	4 - 6	6 - 10	8 - 8	10 - 3	12 - 1
	Southern Pine	No.3	3 - 8	5 - 6	6 - 11	8 - 4	9 - 11	3 - 6	5 - 2	6 - 6	7 - 11	9 - 4
	Spruce-Pine Fir	SS	6 - 0	9 - 2	11 - 8	14 - 3	16 - 6	5 - 11	8 - 8	11 - 0	13 - 5	15 - 7
	Spruce-Pine Fir	No.1	5 - 3	7 - 8	9 - 9	11 - 11	13 - 10	5 - 0	7 - 3	9 - 2	11 - 3	13 - 0
	Spruce-Pine Fir	No.2	5 - 3	7 - 8	9 - 9	11 - 11	13 - 10	5 - 0	7 - 3	9 - 2	11 - 3	13 - 0
	Spruce-Pine Fir	No.3	4 - 0	5 - 10	7 - 4	9 - 0	10 - 5	3 - 9	5 - 6	6 - 11	8 - 6	9 - 10
24	Douglas Fir-Larch	SS	6 - 0	9 - 0	11 - 5	13 - 11	16 - 2	5 - 10	8 - 6	10 - 9	13 - 2	15 - 3
	Douglas Fir-Larch	No.1	5 - 0	7 - 4	9 - 4	11 - 5	13 - 2	4 - 9	6 - 11	8 - 9	10 - 9	12 - 5
	Douglas Fir-Larch	No.2	4 - 9	7 - 0	8 - 10	10 - 10	12 - 6	4 - 6	6 - 7	8 - 4	10 - 2	11 - 10
	Douglas Fir-Larch	No.3	3 - 8	5 - 4	6 - 9	8 - 3	9 - 7	3 - 5	5 - 0	6 - 4	7 - 9	9 - 0
	Hem-Fir	SS	5 - 8	8 - 9	11 - 0	13 - 6	15 - 7	5 - 7	8 - 3	10 - 5	12 - 8	14 - 9
	Hem-Fir	No.1	5 - 0	7 - 3	9 - 2	11 - 3	13 - 0	4 - 8	6 - 10	8 - 8	10 - 7	12 - 4
	Hem-Fir	No.2	4 - 8	6 - 9	8 - 7	10 - 6	12 - 2	4 - 4	6 - 5	8 - 1	9 - 11	11 - 6
	Hem-Fir	No.3	3 - 7	5 - 2	6 - 7	8 - 1	9 - 4	3 - 4	4 - 11	6 - 3	7 - 7	8 - 10
	Southern Pine	SS	5 - 11	9 - 3	11 - 11	14 - 2	16 - 8	5 - 11	8 - 10	11 - 2	13 - 4	15 - 9
	Southern Pine	No.1	5 - 0	7 - 6	9 - 6	11 - 1	13 - 2	4 - 9	7 - 1	9 - 0	10 - 6	12 - 5
	Southern Pine	No.2	4 - 4	6 - 5	8 - 2	9 - 9	11 - 5	4 - 1	6 - 1	7 - 9	9 - 2	10 - 9
	Southern Pine	No.3	3 - 4	4 - 11	6 - 2	7 - 6	8 - 10	3 - 1	4 - 7	5 - 10	7 - 1	8 - 4
	Spruce-Pine Fir	SS	5 - 6	8 - 3	10 - 5	12 - 9	14 - 9	5 - 4	7 - 9	9 - 10	12 - 0	13 - 11
	Spruce-Pine Fir	No.1	4 - 8	6 - 11	8 - 9	10 - 8	12 - 4	4 - 5	6 - 6	8 - 3	10 - 1	11 - 8
	Spruce-Pine Fir	No.2	4 - 8	6 - 11	8 - 9	10 - 8	12 - 4	4 - 5	6 - 6	8 - 3	10 - 1	11 - 8
	Spruce-Pine Fir	No.3	3 - 7	5 - 2	6 - 7	8 - 1	9 - 4	3 - 4	4 - 11	6 - 3	7 - 7	8 - 10

† Spans are limited to 20 feet in length.

See footnotes 1-2.

Copyright © American Wood Council. Downloaded/printed pursuant to License Agreement. No reproduction or transfer authorized.

Table 3.26K Rafter Spans for Common Lumber Species

(Ceiling Attached to Rafters) Ground Snow Load = 70 psf, L/Δ_{LL} = 240, Flexible Finish (including gypsum board)

GSL = 70 psf
L/Δ_{LL} = 240

			Dead Load = 10 psf					Dead Load = 20 psf				
			2x4	2x6	2x8	2x10	2x12	2x4	2x6	2x8	2x10	2x12
			Maximum Rafter Spans[1,2]									
Joist Spacing (in.)	Species	Grade	(ft-in.)	(ft-in.)	(ft-in.)	(ft-in.)	(ft-in.)	(ft-in.)	(ft-in.)	(ft-in.)	(ft-in.)	(ft-in.)
12	Douglas Fir-Larch	SS	6 - 10	10 - 9	14 - 3	18 - 2	20-0†	6 - 10	10 - 9	14 - 3	18 - 2	20-0†
	Douglas Fir-Larch	No.1	6 - 7	10 - 5	13 - 2	16 - 1	18 - 8	6 - 7	9 - 10	12 - 5	15 - 2	17 - 7
	Douglas Fir-Larch	No.2	6 - 6	9 - 10	12 - 6	15 - 3	17 - 9	6 - 4	9 - 4	11 - 9	14 - 5	16 - 8
	Douglas Fir-Larch	No.3	5 - 2	7 - 7	9 - 7	11 - 8	13 - 6	4 - 10	7 - 1	9 - 0	11 - 0	12 - 9
	Hem-Fir	SS	6 - 6	10 - 2	13 - 5	17 - 2	20-0†	6 - 6	10 - 2	13 - 5	17 - 2	20-0†
	Hem-Fir	No.1	6 - 4	10 - 0	13 - 0	15 - 11	18 - 5	6 - 4	9 - 8	12 - 3	15 - 0	17 - 5
	Hem-Fir	No.2	6 - 1	9 - 6	12 - 2	14 - 10	17 - 3	6 - 1	9 - 1	11 - 6	14 - 0	16 - 3
	Hem-Fir	No.3	5 - 0	7 - 4	9 - 4	11 - 5	13 - 2	4 - 9	6 - 11	8 - 9	10 - 9	12 - 5
	Southern Pine	SS	6 - 9	10 - 7	14 - 0	17 - 10	20-0†	6 - 9	10 - 7	14 - 0	17 - 10	20-0†
	Southern Pine	No.1	6 - 6	10 - 2	13 - 5	15 - 9	18 - 8	6 - 6	10 - 0	12 - 8	14 - 10	17 - 7
	Southern Pine	No.2	6 - 1	9 - 2	11 - 7	13 - 9	16 - 2	5 - 9	8 - 7	10 - 11	12 - 11	15 - 3
	Southern Pine	No.3	4 - 8	6 - 11	8 - 9	10 - 7	12 - 6	4 - 5	6 - 6	8 - 3	10 - 0	11 - 10
	Spruce-Pine Fir	SS	6 - 4	10 - 0	13 - 2	16 - 9	20-0†	6 - 4	10 - 0	13 - 2	16 - 9	19 - 8
	Spruce-Pine Fir	No.1	6 - 2	9 - 9	12 - 4	15 - 1	17 - 6	6 - 2	9 - 2	11 - 8	14 - 2	16 - 6
	Spruce-Pine Fir	No.2	6 - 2	9 - 9	12 - 4	15 - 1	17 - 6	6 - 2	9 - 2	11 - 8	14 - 2	16 - 6
	Spruce-Pine Fir	No.3	5 - 0	7 - 4	9 - 4	11 - 5	13 - 2	4 - 9	6 - 11	8 - 9	10 - 9	12 - 5
16	Douglas Fir-Larch	SS	6 - 3	9 - 10	12 - 11	16 - 6	19 - 10	6 - 3	9 - 10	12 - 11	16 - 1	18 - 8
	Douglas Fir-Larch	No.1	6 - 0	9 - 0	11 - 5	13 - 11	16 - 2	5 - 10	8 - 6	10 - 9	13 - 2	15 - 3
	Douglas Fir-Larch	No.2	5 - 10	8 - 7	10 - 10	13 - 3	15 - 4	5 - 6	8 - 1	10 - 3	12 - 6	14 - 6
	Douglas Fir-Larch	No.3	4 - 6	6 - 6	8 - 3	10 - 1	11 - 9	4 - 3	6 - 2	7 - 10	9 - 6	11 - 1
	Hem-Fir	SS	5 - 11	9 - 3	12 - 2	15 - 7	18 - 11	5 - 11	9 - 3	12 - 2	15 - 7	18 - 0
	Hem-Fir	No.1	5 - 9	8 - 11	11 - 3	13 - 9	16 - 0	5 - 9	8 - 5	10 - 8	13 - 0	15 - 1
	Hem-Fir	No.2	5 - 6	8 - 4	10 - 6	12 - 10	14 - 11	5 - 4	7 - 10	9 - 11	12 - 1	14 - 1
	Hem-Fir	No.3	4 - 4	6 - 4	8 - 1	9 - 10	11 - 5	4 - 1	6 - 0	7 - 7	9 - 4	10 - 9
	Southern Pine	SS	6 - 1	9 - 7	12 - 8	16 - 2	19 - 8	6 - 1	9 - 7	12 - 8	16 - 2	19 - 3
	Southern Pine	No.1	5 - 11	9 - 2	11 - 8	13 - 8	16 - 2	5 - 10	8 - 8	11 - 0	12 - 10	15 - 3
	Southern Pine	No.2	5 - 3	7 - 11	10 - 0	11 - 11	14 - 0	5 - 0	7 - 5	9 - 5	11 - 3	13 - 2
	Southern Pine	No.3	4 - 1	6 - 0	7 - 7	9 - 2	10 - 10	3 - 10	5 - 8	7 - 1	8 - 8	10 - 3
	Spruce-Pine Fir	SS	5 - 9	9 - 1	11 - 11	15 - 3	18 - 1	5 - 9	9 - 1	11 - 11	14 - 8	17 - 1
	Spruce-Pine Fir	No.1	5 - 8	8 - 5	10 - 8	13 - 1	15 - 2	5 - 5	8 - 0	10 - 1	12 - 4	14 - 3
	Spruce-Pine Fir	No.2	5 - 8	8 - 5	10 - 8	13 - 1	15 - 2	5 - 5	8 - 0	10 - 1	12 - 4	14 - 3
	Spruce-Pine Fir	No.3	4 - 4	6 - 4	8 - 1	9 - 10	11 - 5	4 - 1	6 - 0	7 - 7	9 - 4	10 - 9
19.2	Douglas Fir-Larch	SS	5 - 10	9 - 3	12 - 2	15 - 6	18 - 1	5 - 10	9 - 3	12 - 0	14 - 8	17 - 1
	Douglas Fir-Larch	No.1	5 - 8	8 - 3	10 - 5	12 - 9	14 - 9	5 - 4	7 - 9	9 - 10	12 - 0	13 - 11
	Douglas Fir-Larch	No.2	5 - 4	7 - 10	9 - 11	12 - 1	14 - 0	5 - 0	7 - 4	9 - 4	11 - 5	13 - 2
	Douglas Fir-Larch	No.3	4 - 1	6 - 0	7 - 7	9 - 3	10 - 8	3 - 10	5 - 7	7 - 1	8 - 8	10 - 1
	Hem-Fir	SS	5 - 6	8 - 8	11 - 6	14 - 8	17 - 6	5 - 6	8 - 8	11 - 6	14 - 2	16 - 6
	Hem-Fir	No.1	5 - 5	8 - 2	10 - 3	12 - 7	14 - 7	5 - 3	7 - 8	9 - 8	11 - 10	13 - 9
	Hem-Fir	No.2	5 - 2	7 - 7	9 - 7	11 - 9	13 - 7	4 - 11	7 - 2	9 - 1	11 - 1	12 - 10
	Hem-Fir	No.3	4 - 0	5 - 10	7 - 4	9 - 0	10 - 5	3 - 9	5 - 6	6 - 11	8 - 6	9 - 10
	Southern Pine	SS	5 - 9	9 - 1	11 - 11	15 - 3	18 - 6	5 - 9	9 - 1	11 - 11	14 - 11	17 - 7
	Southern Pine	No.1	5 - 6	8 - 5	10 - 8	12 - 5	14 - 9	5 - 4	7 - 11	10 - 0	11 - 9	13 - 11
	Southern Pine	No.2	4 - 10	7 - 3	9 - 2	10 - 10	12 - 9	4 - 6	6 - 10	8 - 8	10 - 3	12 - 1
	Southern Pine	No.3	3 - 8	5 - 6	6 - 11	8 - 4	9 - 11	3 - 6	5 - 2	6 - 6	7 - 11	9 - 4
	Spruce-Pine Fir	SS	5 - 5	8 - 6	11 - 3	14 - 3	16 - 6	5 - 5	8 - 6	11 - 0	13 - 5	15 - 7
	Spruce-Pine Fir	No.1	5 - 3	7 - 8	9 - 9	11 - 11	13 - 10	5 - 0	7 - 3	9 - 2	11 - 3	13 - 0
	Spruce-Pine Fir	No.2	5 - 3	7 - 8	9 - 9	11 - 11	13 - 10	5 - 0	7 - 3	9 - 2	11 - 3	13 - 0
	Spruce-Pine Fir	No.3	4 - 0	5 - 10	7 - 4	9 - 0	10 - 5	3 - 9	5 - 6	6 - 11	8 - 6	9 - 10
24	Douglas Fir-Larch	SS	5 - 5	8 - 7	11 - 3	13 - 11	16 - 2	5 - 5	8 - 6	10 - 9	13 - 2	15 - 3
	Douglas Fir-Larch	No.1	5 - 0	7 - 4	9 - 4	11 - 5	13 - 2	4 - 9	6 - 11	8 - 9	10 - 9	12 - 5
	Douglas Fir-Larch	No.2	4 - 9	7 - 0	8 - 10	10 - 10	12 - 6	4 - 6	6 - 7	8 - 4	10 - 2	11 - 10
	Douglas Fir-Larch	No.3	3 - 8	5 - 4	6 - 9	8 - 3	9 - 7	3 - 5	5 - 0	6 - 4	7 - 9	9 - 0
	Hem-Fir	SS	5 - 2	8 - 1	10 - 8	13 - 6	15 - 7	5 - 2	8 - 1	10 - 5	12 - 8	14 - 9
	Hem-Fir	No.1	5 - 0	7 - 3	9 - 2	11 - 3	13 - 0	4 - 8	6 - 10	8 - 8	10 - 7	12 - 4
	Hem-Fir	No.2	4 - 8	6 - 9	8 - 7	10 - 6	12 - 2	4 - 4	6 - 5	8 - 1	9 - 11	11 - 6
	Hem-Fir	No.3	3 - 7	5 - 2	6 - 7	8 - 1	9 - 4	3 - 4	4 - 11	6 - 3	7 - 7	8 - 10
	Southern Pine	SS	5 - 4	8 - 5	11 - 1	14 - 2	16 - 8	5 - 4	8 - 5	11 - 1	13 - 4	15 - 9
	Southern Pine	No.1	5 - 0	7 - 6	9 - 6	11 - 1	13 - 2	4 - 9	7 - 1	9 - 0	10 - 6	12 - 5
	Southern Pine	No.2	4 - 4	6 - 5	8 - 2	9 - 9	11 - 5	4 - 1	6 - 1	7 - 9	9 - 2	10 - 9
	Southern Pine	No.3	3 - 4	4 - 11	6 - 2	7 - 6	8 - 10	3 - 1	4 - 7	5 - 10	7 - 1	8 - 4
	Spruce-Pine Fir	SS	5 - 0	7 - 11	10 - 5	12 - 9	14 - 9	5 - 0	7 - 9	9 - 10	12 - 0	13 - 11
	Spruce-Pine Fir	No.1	4 - 8	6 - 11	8 - 9	10 - 8	12 - 4	4 - 5	6 - 6	8 - 3	10 - 1	11 - 8
	Spruce-Pine Fir	No.2	4 - 8	6 - 11	8 - 9	10 - 8	12 - 4	4 - 5	6 - 6	8 - 3	10 - 1	11 - 8
	Spruce-Pine Fir	No.3	3 - 7	5 - 2	6 - 7	8 - 1	9 - 4	3 - 4	4 - 11	6 - 3	7 - 7	8 - 10

† Spans are limited to 20 feet in length.

See footnotes 1-2.

Copyright © American Wood Council. Downloaded/printed pursuant to License Agreement. No reproduction or transfer authorized.

Table 3.26L Rafter Spans for Common Lumber Species

(Ceiling Attached to Rafters) Ground Snow Load = 70 psf, L/Δ_{LL} = 360, Brittle Finish (including plaster and stucco)

GSL = 70 psf
L/Δ_{LL} = 360

			Dead Load = 10 psf					Dead Load = 20 psf				
			2x4	2x6	2x8	2x10	2x12	2x4	2x6	2x8	2x10	2x12
			Maximum Rafter Spans[1,2]									
Joist Spacing (in.)	Species	Grade	(ft-in.)	(ft-in.)	(ft-in.)	(ft-in.)	(ft-in.)	(ft-in.)	(ft-in.)	(ft-in.)	(ft-in.)	(ft-in.)
12	Douglas Fir-Larch	SS	6 - 0	9 - 5	12 - 5	15 - 10	19 - 3	6 - 0	9 - 5	12 - 5	15 - 10	19 - 3
	Douglas Fir-Larch	No.1	5 - 9	9 - 1	12 - 0	15 - 3	18 - 7	5 - 9	9 - 1	12 - 0	15 - 2	17 - 7
	Douglas Fir-Larch	No.2	5 - 8	8 - 11	11 - 9	15 - 0	17 - 9	5 - 8	8 - 11	11 - 9	14 - 5	16 - 8
	Douglas Fir-Larch	No.3	5 - 2	7 - 7	9 - 7	11 - 8	13 - 6	4 - 10	7 - 1	9 - 0	11 - 0	12 - 9
	Hem-Fir	SS	5 - 8	8 - 11	11 - 9	15 - 0	18 - 2	5 - 8	8 - 11	11 - 9	15 - 0	18 - 2
	Hem-Fir	No.1	5 - 6	8 - 8	11 - 6	14 - 8	17 - 10	5 - 6	8 - 8	11 - 6	14 - 8	17 - 5
	Hem-Fir	No.2	5 - 3	8 - 4	10 - 11	14 - 0	17 - 0	5 - 3	8 - 4	10 - 11	14 - 0	16 - 3
	Hem-Fir	No.3	5 - 0	7 - 4	9 - 4	11 - 5	13 - 2	4 - 9	6 - 11	8 - 9	10 - 9	12 - 5
	Southern Pine	SS	5 - 11	9 - 3	12 - 2	15 - 7	18 - 11	5 - 11	9 - 3	12 - 2	15 - 7	18 - 11
	Southern Pine	No.1	5 - 8	8 - 11	11 - 9	15 - 0	18 - 2	5 - 8	8 - 11	11 - 9	14 - 10	17 - 7
	Southern Pine	No.2	5 - 5	8 - 6	11 - 3	13 - 9	16 - 2	5 - 5	8 - 6	10 - 11	12 - 11	15 - 3
	Southern Pine	No.3	4 - 8	6 - 11	8 - 9	10 - 7	12 - 6	4 - 5	6 - 6	8 - 3	10 - 0	11 - 10
	Spruce-Pine Fir	SS	5 - 6	8 - 8	11 - 6	14 - 8	17 - 10	5 - 6	8 - 8	11 - 6	14 - 8	17 - 10
	Spruce-Pine Fir	No.1	5 - 5	8 - 6	11 - 3	14 - 4	17 - 5	5 - 5	8 - 6	11 - 3	14 - 2	16 - 6
	Spruce-Pine Fir	No.2	5 - 5	8 - 6	11 - 3	14 - 4	17 - 5	5 - 5	8 - 6	11 - 3	14 - 2	16 - 6
	Spruce-Pine Fir	No.3	5 - 0	7 - 4	9 - 4	11 - 5	13 - 2	4 - 9	6 - 11	8 - 9	10 - 9	12 - 5
16	Douglas Fir-Larch	SS	5 - 5	8 - 7	11 - 3	14 - 5	17 - 6	5 - 5	8 - 7	11 - 3	14 - 5	17 - 6
	Douglas Fir-Larch	No.1	5 - 3	8 - 3	10 - 10	13 - 10	16 - 2	5 - 3	8 - 3	10 - 9	13 - 2	15 - 3
	Douglas Fir-Larch	No.2	5 - 2	8 - 1	10 - 8	13 - 3	15 - 4	5 - 2	8 - 1	10 - 3	12 - 6	14 - 6
	Douglas Fir-Larch	No.3	4 - 6	6 - 6	8 - 3	10 - 1	11 - 9	4 - 3	6 - 2	7 - 10	9 - 6	11 - 1
	Hem-Fir	SS	5 - 2	8 - 1	10 - 8	13 - 7	16 - 6	5 - 2	8 - 1	10 - 8	13 - 7	16 - 6
	Hem-Fir	No.1	5 - 0	7 - 11	10 - 5	13 - 4	16 - 0	5 - 0	7 - 11	10 - 5	13 - 0	15 - 1
	Hem-Fir	No.2	4 - 10	7 - 7	9 - 11	12 - 8	14 - 11	4 - 10	7 - 7	9 - 11	12 - 1	14 - 1
	Hem-Fir	No.3	4 - 4	6 - 4	8 - 1	9 - 10	11 - 5	4 - 1	6 - 0	7 - 7	9 - 4	10 - 9
	Southern Pine	SS	5 - 4	8 - 5	11 - 1	14 - 2	17 - 2	5 - 4	8 - 5	11 - 1	14 - 2	17 - 2
	Southern Pine	No.1	5 - 2	8 - 1	10 - 8	13 - 7	16 - 2	5 - 2	8 - 1	10 - 8	12 - 10	15 - 3
	Southern Pine	No.2	4 - 11	7 - 9	10 - 0	11 - 11	14 - 0	4 - 11	7 - 5	9 - 5	11 - 3	13 - 2
	Southern Pine	No.3	4 - 1	6 - 0	7 - 7	9 - 2	10 - 10	3 - 10	5 - 8	7 - 1	8 - 8	10 - 3
	Spruce-Pine Fir	SS	5 - 0	7 - 11	10 - 5	13 - 4	16 - 2	5 - 0	7 - 11	10 - 5	13 - 4	16 - 2
	Spruce-Pine Fir	No.1	4 - 11	7 - 9	10 - 2	13 - 0	15 - 2	4 - 11	7 - 9	10 - 1	12 - 4	14 - 3
	Spruce-Pine Fir	No.2	4 - 11	7 - 9	10 - 2	13 - 0	15 - 2	4 - 11	7 - 9	10 - 1	12 - 4	14 - 3
	Spruce-Pine Fir	No.3	4 - 4	6 - 4	8 - 1	9 - 10	11 - 5	4 - 1	6 - 0	7 - 7	9 - 4	10 - 9
19.2	Douglas Fir-Larch	SS	5 - 2	8 - 1	10 - 7	13 - 7	16 - 6	5 - 2	8 - 1	10 - 7	13 - 7	16 - 6
	Douglas Fir-Larch	No.1	4 - 11	7 - 9	10 - 3	12 - 9	14 - 9	4 - 11	7 - 9	9 - 10	12 - 0	13 - 11
	Douglas Fir-Larch	No.2	4 - 10	7 - 7	9 - 11	12 - 1	14 - 0	4 - 10	7 - 4	9 - 4	11 - 5	13 - 2
	Douglas Fir-Larch	No.3	4 - 1	6 - 0	7 - 7	9 - 3	10 - 8	3 - 10	5 - 7	7 - 1	8 - 8	10 - 1
	Hem-Fir	SS	4 - 10	7 - 7	10 - 0	12 - 10	15 - 7	4 - 10	7 - 7	10 - 0	12 - 10	15 - 7
	Hem-Fir	No.1	4 - 9	7 - 5	9 - 10	12 - 6	14 - 7	4 - 9	7 - 5	9 - 8	11 - 10	13 - 9
	Hem-Fir	No.2	4 - 6	7 - 1	9 - 4	11 - 9	13 - 7	4 - 6	7 - 1	9 - 1	11 - 1	12 - 10
	Hem-Fir	No.3	4 - 0	5 - 10	7 - 4	9 - 0	10 - 5	3 - 9	5 - 6	6 - 11	8 - 6	9 - 10
	Southern Pine	SS	5 - 0	7 - 11	10 - 5	13 - 4	16 - 2	5 - 0	7 - 11	10 - 5	13 - 4	16 - 2
	Southern Pine	No.1	4 - 10	7 - 7	10 - 0	12 - 5	14 - 9	4 - 10	7 - 7	10 - 0	11 - 9	13 - 11
	Southern Pine	No.2	4 - 8	7 - 3	9 - 2	10 - 10	12 - 9	4 - 6	6 - 10	8 - 8	10 - 3	12 - 1
	Southern Pine	No.3	3 - 8	5 - 6	6 - 11	8 - 4	9 - 11	3 - 6	5 - 2	6 - 6	7 - 11	9 - 4
	Spruce-Pine Fir	SS	4 - 9	7 - 5	9 - 10	12 - 6	15 - 3	4 - 9	7 - 5	9 - 10	12 - 6	15 - 3
	Spruce-Pine Fir	No.1	4 - 8	7 - 3	9 - 7	11 - 11	13 - 10	4 - 8	7 - 3	9 - 2	11 - 3	13 - 0
	Spruce-Pine Fir	No.2	4 - 8	7 - 3	9 - 7	11 - 11	13 - 10	4 - 8	7 - 3	9 - 2	11 - 3	13 - 0
	Spruce-Pine Fir	No.3	4 - 0	5 - 10	7 - 4	9 - 0	10 - 5	3 - 9	5 - 6	6 - 11	8 - 6	9 - 10
24	Douglas Fir-Larch	SS	4 - 9	7 - 6	9 - 10	12 - 7	15 - 4	4 - 9	7 - 6	9 - 10	12 - 7	15 - 3
	Douglas Fir-Larch	No.1	4 - 7	7 - 2	9 - 4	11 - 5	13 - 2	4 - 7	6 - 11	8 - 9	10 - 9	12 - 5
	Douglas Fir-Larch	No.2	4 - 6	7 - 0	8 - 10	10 - 10	12 - 6	4 - 6	6 - 7	8 - 4	10 - 2	11 - 10
	Douglas Fir-Larch	No.3	3 - 8	5 - 4	6 - 9	8 - 3	9 - 7	3 - 5	5 - 0	6 - 4	7 - 9	9 - 0
	Hem-Fir	SS	4 - 6	7 - 1	9 - 4	11 - 11	14 - 5	4 - 6	7 - 1	9 - 4	11 - 11	14 - 5
	Hem-Fir	No.1	4 - 5	6 - 11	9 - 1	11 - 3	13 - 0	4 - 5	6 - 10	8 - 8	10 - 7	12 - 4
	Hem-Fir	No.2	4 - 2	6 - 7	8 - 7	10 - 6	12 - 2	4 - 2	6 - 5	8 - 1	9 - 11	11 - 6
	Hem-Fir	No.3	3 - 7	5 - 2	6 - 7	8 - 1	9 - 4	3 - 4	4 - 11	6 - 3	7 - 7	8 - 10
	Southern Pine	SS	4 - 8	7 - 4	9 - 8	12 - 4	15 - 0	4 - 8	7 - 4	9 - 8	12 - 4	15 - 0
	Southern Pine	No.1	4 - 6	7 - 1	9 - 4	11 - 1	13 - 2	4 - 6	7 - 1	9 - 0	10 - 6	12 - 5
	Southern Pine	No.2	4 - 4	6 - 5	8 - 2	9 - 9	11 - 5	4 - 1	6 - 1	7 - 9	9 - 2	10 - 9
	Southern Pine	No.3	3 - 4	4 - 11	6 - 2	7 - 6	8 - 10	3 - 1	4 - 7	5 - 10	7 - 1	8 - 4
	Spruce-Pine Fir	SS	4 - 5	6 - 11	9 - 1	11 - 7	14 - 2	4 - 5	6 - 11	9 - 1	11 - 7	13 - 11
	Spruce-Pine Fir	No.1	4 - 4	6 - 9	8 - 9	10 - 8	12 - 4	4 - 4	6 - 6	8 - 3	10 - 1	11 - 8
	Spruce-Pine Fir	No.2	4 - 4	6 - 9	8 - 9	10 - 8	12 - 4	4 - 4	6 - 6	8 - 3	10 - 1	11 - 8
	Spruce-Pine Fir	No.3	3 - 7	5 - 2	6 - 7	8 - 1	9 - 4	3 - 4	4 - 11	6 - 3	7 - 7	8 - 10

† Spans are limited to 20 feet in length.
See footnotes 1-2.

Copyright © American Wood Council. Downloaded/printed pursuant to License Agreement. No reproduction or transfer authorized.

Footnotes to Tables 3.26D-L

1 Tabulated rafter spans assume ceiling joists or rafter ties are located at the bottom of the attic space to resist thrust. When ceiling joists or rafter ties are located higher in the attic space and are used to resist thrust, the rafter spans shall be reduced using the factors given in the following table:

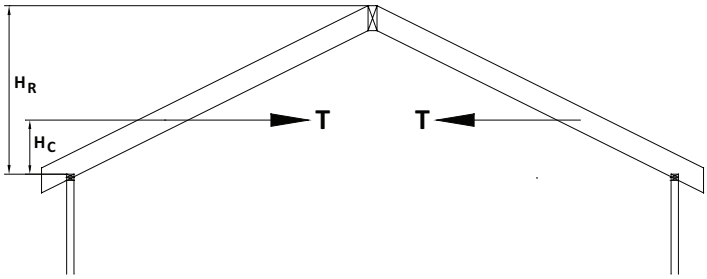

Ceiling Height/Top Plate to Roof Ridge Height (H_C/H_R)	Rafter Span Adjustment Factors
1/2	0.58
1/3	0.67
1/4	0.76
1/5	0.83
1/6	0.90
1/7.5 and less	1.00

Note: Lateral deflection of the rafter below the rafter ties may exceed 3/4 inch when rafter ties are located above one-third of the top plate to roof ridge height, H_R, or when H_c is greater than 2 feet and may require additional consideration.

2 Spans checked for live load deflection only.

Copyright © American Wood Council. Downloaded/printed pursuant to License Agreement. No reproduction or transfer authorized.

Table 3.26M Rafter Deflection Limit = L/180

Exposure B

Maximum Rafter Spans for Common Lumber Species Resisting Uplift Loads due to Wind (12:12 Slope)

Wind Speed 3-second gust (mph) (See Figure 1.1)			90					95					100				
Rafter Spacing (in.)	Species	Grade	2x4	2x6	2x8	2x10	2x12	2x4	2x6	2x8	2x10	2x12	2x4	2x6	2x8	2x10	2x12
			Maximum Allowable Rafter Span (ft-in.)[1]														
12	DFL	SS	10 - 4	18 - 1	24 - 2	26-0†	26-0†	9 - 11	17 - 3	23 - 10	26-0†	26-0†	9 - 6	16 - 6	23 - 0	26-0†	26-0†
	DFL	No.1	9 - 11	17 - 2	23 - 3	26-0†	26-0†	9 - 6	16 - 5	23 - 0	26-0†	26-0†	9 - 1	15 - 9	22 - 2	26-0†	26-0†
	DFL	No.2	9 - 8	16 - 9	22 - 10	26-0†	26-0†	9 - 3	16 - 0	22 - 6	26-0†	26-0†	8 - 11	15 - 4	21 - 9	26-0†	26-0†
	DFL	No.3	9 - 2	15 - 10	21 - 10	26-0†	26-0†	8 - 9	15 - 2	21 - 6	26-0†	26-0†	8 - 5	14 - 6	20 - 8	26-0†	26-0†
	HF	SS	9 - 8	16 - 9	22 - 10	26-0†	26-0†	9 - 3	16 - 0	22 - 6	26-0†	26-0†	8 - 11	15 - 4	21 - 9	26-0†	26-0†
	HF	No.1	9 - 5	16 - 4	22 - 4	26-0†	26-0†	9 - 0	15 - 7	22 - 0	26-0†	26-0†	8 - 8	14 - 11	21 - 3	26-0†	26-0†
	HF	No.2	8 - 11	15 - 4	21 - 4	26-0†	26-0†	8 - 6	14 - 8	20 - 11	26-0†	26-0†	8 - 2	14 - 1	20 - 0	25 - 11	26-0†
	HF	No.3	8 - 7	14 - 10	20 - 9	26-0†	26-0†	8 - 3	14 - 3	20 - 2	26-0†	26-0†	7 - 11	13 - 8	19 - 4	25 - 2	26-0†
	SP	SS	10 - 1	17 - 8	23 - 9	26-0†	26-0†	9 - 8	16 - 10	23 - 5	26-0†	26-0†	9 - 4	16 - 2	22 - 7	26-0†	26-0†
	SP	No.1	9 - 8	16 - 9	22 - 10	26-0†	26-0†	9 - 3	16 - 0	22 - 6	26-0†	26-0†	8 - 11	15 - 4	21 - 9	26-0†	26-0†
	SP	No.2	9 - 2	15 - 10	21 - 10	26-0†	26-0†	8 - 9	15 - 2	21 - 6	26-0†	26-0†	8 - 5	14 - 6	20 - 8	26-0†	26-0†
	SP	No.3	8 - 11	15 - 4	21 - 0	25 - 6	26-0†	8 - 6	14 - 4	20 - 2	24 - 11	26-0†	8 - 0	13 - 5	18 - 8	23 - 8	26-0†
	SPF	SS	9 - 5	16 - 4	22 - 4	26-0†	26-0†	9 - 0	15 - 7	22 - 0	26-0†	26-0†	8 - 8	14 - 11	21 - 3	26-0†	26-0†
	SPF	No.1	9 - 2	15 - 10	21 - 10	26-0†	26-0†	8 - 9	15 - 2	21 - 6	26-0†	26-0†	8 - 5	14 - 6	20 - 8	26-0†	26-0†
	SPF	No.2	9 - 2	15 - 10	21 - 10	26-0†	26-0†	8 - 9	15 - 2	21 - 6	26-0†	26-0†	8 - 5	14 - 6	20 - 8	26-0†	26-0†
	SPF	No.3	8 - 7	14 - 10	20 - 9	26-0†	26-0†	8 - 3	14 - 3	20 - 2	26-0†	26-0†	7 - 11	13 - 8	19 - 4	25 - 2	26-0†
16	DFL	SS	9 - 3	16 - 0	22 - 0	26-0†	26-0†	8 - 10	15 - 3	21 - 8	26-0†	26-0†	8 - 6	14 - 8	20 - 10	26-0†	26-0†
	DFL	No.1	8 - 10	15 - 3	21 - 2	26-0†	26-0†	8 - 6	14 - 7	20 - 9	26-0†	26-0†	8 - 2	14 - 0	19 - 10	25 - 9	26-0†
	DFL	No.2	8 - 7	14 - 10	20 - 9	26-0†	26-0†	8 - 3	14 - 3	20 - 2	26-0†	26-0†	7 - 11	13 - 8	19 - 4	25 - 2	26-0†
	DFL	No.3	8 - 2	14 - 1	19 - 10	24 - 4	26-0†	7 - 10	13 - 3	18 - 7	23 - 10	26-0†	7 - 6	12 - 4	17 - 3	22 - 8	26-0†
	HF	SS	8 - 7	14 - 10	20 - 9	26-0†	26-0†	8 - 3	14 - 3	20 - 2	26-0†	26-0†	7 - 11	13 - 8	19 - 4	25 - 2	26-0†
	HF	No.1	8 - 5	14 - 6	20 - 3	25 - 11	26-0†	8 - 1	13 - 10	19 - 8	25 - 6	26-0†	7 - 9	13 - 3	18 - 9	24 - 8	26-0†
	HF	No.2	8 - 0	13 - 8	19 - 4	24 - 8	26-0†	7 - 8	13 - 1	18 - 6	24 - 4	26-0†	7 - 4	12 - 6	17 - 8	23 - 6	26-0†
	HF	No.3	7 - 9	13 - 3	18 - 8	23 - 9	26-0†	7 - 5	12 - 8	17 - 10	23 - 3	26-0†	7 - 1	12 - 0	16 - 8	22 - 1	25 - 7
	SP	SS	9 - 0	15 - 7	21 - 7	26-0†	26-0†	8 - 8	14 - 11	21 - 3	26-0†	26-0†	8 - 4	14 - 4	20 - 4	26-0†	26-0†
	SP	No.1	8 - 7	14 - 10	20 - 9	26-0†	26-0†	8 - 3	14 - 3	20 - 2	26-0†	26-0†	7 - 11	13 - 8	19 - 4	25 - 2	26-0†
	SP	No.2	8 - 2	14 - 1	19 - 10	25 - 4	26-0†	7 - 10	13 - 6	19 - 1	24 - 11	26-0†	7 - 7	12 - 11	18 - 3	24 - 1	26-0†
	SP	No.3	7 - 7	12 - 8	17 - 7	22 - 1	26-0†	7 - 1	11 - 9	16 - 3	21 - 7	25 - 7	6 - 8	11 - 0	15 - 1	20 - 2	24 - 4
	SPF	SS	8 - 5	14 - 6	20 - 3	25 - 11	26-0†	8 - 1	13 - 10	19 - 8	25 - 6	26-0†	7 - 9	13 - 3	18 - 9	24 - 8	26-0†
	SPF	No.1	8 - 2	14 - 1	19 - 10	25 - 4	26-0†	7 - 10	13 - 6	19 - 1	24 - 11	26-0†	7 - 7	12 - 11	18 - 3	24 - 1	26-0†
	SPF	No.2	8 - 2	14 - 1	19 - 10	25 - 4	26-0†	7 - 10	13 - 6	19 - 1	24 - 11	26-0†	7 - 7	12 - 11	18 - 3	24 - 1	26-0†
	SPF	No.3	7 - 9	13 - 3	18 - 8	23 - 9	26-0†	7 - 5	12 - 8	17 - 10	23 - 3	26-0†	7 - 1	12 - 0	16 - 8	22 - 1	25 - 7
19.2	DFL	SS	8 - 7	14 - 10	20 - 8	26-0†	26-0†	8 - 3	14 - 2	20 - 1	26 - 0	26-0†	7 - 11	13 - 7	19 - 3	25 - 1	26-0†
	DFL	No.1	8 - 3	14 - 2	19 - 11	25 - 5	26-0†	7 - 11	13 - 6	19 - 2	25 - 1	26-0†	7 - 7	13 - 0	18 - 4	24 - 2	26-0†
	DFL	No.2	8 - 0	13 - 9	19 - 6	24 - 11	26-0†	7 - 8	13 - 2	18 - 8	24 - 7	26-0†	7 - 5	12 - 8	17 - 10	23 - 9	26-0†
	DFL	No.3	7 - 8	12 - 7	17 - 7	22 - 3	25 - 9	7 - 2	11 - 8	16 - 3	21 - 9	25 - 3	6 - 8	10 - 11	15 - 1	20 - 4	24 - 0
	HF	SS	8 - 0	13 - 9	19 - 6	24 - 11	26-0†	7 - 8	13 - 2	18 - 8	24 - 7	26-0†	7 - 5	12 - 8	17 - 10	23 - 9	26-0†
	HF	No.1	7 - 10	13 - 5	19 - 0	24 - 4	26-0†	7 - 6	12 - 10	18 - 2	24 - 0	26-0†	7 - 3	12 - 4	17 - 4	23 - 3	26-0†
	HF	No.2	7 - 5	12 - 8	17 - 11	23 - 3	26-0†	7 - 1	12 - 2	17 - 1	22 - 11	26-0†	6 - 10	11 - 8	16 - 4	22 - 2	26-0†
	HF	No.3	7 - 2	12 - 2	17 - 0	21 - 8	25 - 2	6 - 11	11 - 4	15 - 8	21 - 3	24 - 7	6 - 6	10 - 7	14 - 7	19 - 7	23 - 5
	SP	SS	8 - 5	14 - 6	20 - 3	25 - 11	26-0†	8 - 1	13 - 10	19 - 8	25 - 6	26-0†	7 - 9	13 - 3	18 - 9	24 - 8	26-0†
	SP	No.1	8 - 0	13 - 9	19 - 6	24 - 11	26-0†	7 - 8	13 - 2	18 - 8	24 - 7	26-0†	7 - 5	12 - 8	17 - 10	23 - 9	26-0†
	SP	No.2	7 - 8	13 - 1	18 - 6	23 - 10	26-0†	7 - 4	12 - 6	17 - 8	23 - 6	26-0†	7 - 0	12 - 0	16 - 10	22 - 8	26-0†
	SP	No.3	6 - 9	11 - 3	15 - 5	20 - 2	23 - 10	6 - 4	10 - 5	14 - 3	18 - 11	23 - 4	5 - 11	9 - 9	13 - 4	17 - 6	22 - 2
	SPF	SS	7 - 10	13 - 5	19 - 0	24 - 4	26-0†	7 - 6	12 - 10	18 - 2	24 - 0	26-0†	7 - 3	12 - 4	17 - 4	23 - 3	26-0†
	SPF	No.1	7 - 8	13 - 1	18 - 6	23 - 10	26-0†	7 - 4	12 - 6	17 - 8	23 - 6	26-0†	7 - 0	12 - 0	16 - 10	22 - 8	26-0†
	SPF	No.2	7 - 8	13 - 1	18 - 6	23 - 10	26-0†	7 - 4	12 - 6	17 - 8	23 - 6	26-0†	7 - 0	12 - 0	16 - 10	22 - 8	26-0†
	SPF	No.3	7 - 2	12 - 2	17 - 0	21 - 8	25 - 2	6 - 11	11 - 4	15 - 8	21 - 3	24 - 7	6 - 6	10 - 7	14 - 7	19 - 7	23 - 5
24	DFL	SS	7 - 10	13 - 6	19 - 2	24 - 6	26-0†	7 - 7	12 - 11	18 - 3	24 - 2	26-0†	7 - 3	12 - 5	17 - 6	23 - 4	26-0†
	DFL	No.1	7 - 6	12 - 11	18 - 3	23 - 7	26-0†	7 - 3	12 - 4	17 - 5	23 - 3	26-0†	7 - 0	11 - 10	16 - 8	22 - 6	26-0†
	DFL	No.2	7 - 4	12 - 7	17 - 9	23 - 1	26-0†	7 - 1	12 - 1	17 - 0	22 - 9	26-0†	6 - 9	11 - 7	16 - 3	22 - 0	26-0†
	DFL	No.3	6 - 8	10 - 10	15 - 0	19 - 10	23 - 0	6 - 3	10 - 1	13 - 11	18 - 7	22 - 7	5 - 10	9 - 5	12 - 11	17 - 2	21 - 5
	HF	SS	7 - 4	12 - 7	17 - 9	23 - 1	26-0†	7 - 1	12 - 1	17 - 0	22 - 9	26-0†	6 - 9	11 - 7	16 - 3	22 - 0	26-0†
	HF	No.1	7 - 2	12 - 3	17 - 3	22 - 7	26-0†	6 - 11	11 - 9	16 - 6	22 - 4	26-0†	6 - 7	11 - 3	15 - 10	21 - 7	26-0†
	HF	No.2	6 - 10	11 - 7	16 - 3	21 - 7	26-0†	6 - 6	11 - 1	15 - 7	21 - 3	25 - 10	6 - 3	10 - 8	14 - 11	20 - 4	25 - 0
	HF	No.3	6 - 5	10 - 6	14 - 6	19 - 5	22 - 6	6 - 0	9 - 9	13 - 5	17 - 11	22 - 0	5 - 8	9 - 2	12 - 6	16 - 7	20 - 9
	SP	SS	7 - 9	13 - 3	18 - 8	24 - 0	26-0†	7 - 5	12 - 8	17 - 10	23 - 8	26-0†	7 - 1	12 - 2	17 - 1	22 - 11	26-0†
	SP	No.1	7 - 4	12 - 7	17 - 9	23 - 1	26-0†	7 - 1	12 - 1	17 - 0	22 - 9	26-0†	6 - 9	11 - 7	16 - 3	22 - 0	26-0†
	SP	No.2	7 - 0	11 - 11	16 - 9	22 - 1	26-0†	6 - 9	11 - 5	16 - 0	21 - 10	26-0†	6 - 5	11 - 0	15 - 4	21 - 0	25 - 7
	SP	No.3	5 - 11	9 - 8	13 - 2	17 - 5	21 - 4	5 - 6	9 - 0	12 - 3	16 - 1	20 - 8	5 - 2	8 - 5	11 - 5	14 - 11	19 - 1
	SPF	SS	7 - 2	12 - 3	17 - 3	22 - 7	26-0†	6 - 11	11 - 9	16 - 6	22 - 4	26-0†	6 - 7	11 - 3	15 - 10	21 - 7	26-0†
	SPF	No.1	7 - 0	11 - 11	16 - 9	22 - 1	26-0†	6 - 9	11 - 5	16 - 0	21 - 10	26-0†	6 - 5	11 - 0	15 - 4	21 - 0	25 - 7
	SPF	No.2	7 - 0	11 - 11	16 - 9	22 - 1	26-0†	6 - 9	11 - 5	16 - 0	21 - 10	26-0†	6 - 5	11 - 0	15 - 4	21 - 0	25 - 7
	SPF	No.3	6 - 5	10 - 6	14 - 6	19 - 5	22 - 6	6 - 0	9 - 9	13 - 5	17 - 11	22 - 0	5 - 8	9 - 2	12 - 6	16 - 7	20 - 9

[1] See Table 3.26M footnotes.

† Spans are limited to 26 feet in length.

Copyright © American Wood Council. Downloaded/printed pursuant to License Agreement. No reproduction or transfer authorized.
AMERICAN WOOD COUNCIL

Table 3.26M (Cont.) **Rafter Deflection Limit = L/180**

Maximum Rafter Spans for Common Lumber Species Resisting Uplift Loads due to Wind (12:12 Slope)

Exposure B

Wind Speed 3-second gust (mph) (See Figure 1.1)			105					110					115				
Rafter Spacing (in.)	Species	Grade	2x4	2x6	2x8	2x10	2x12	2x4	2x6	2x8	2x10	2x12	2x4	2x6	2x8	2x10	2x12
			Maximum Allowable Rafter Span (ft-in.)[1]														
12	DFL	SS	9 - 2	15 - 10	22 - 3	26-0†	26-0†	8 - 10	15 - 3	21 - 7	26-0†	26-0†	8 - 6	14 - 8	20 - 11	26-0†	26-0†
	DFL	No.1	8 - 9	15 - 1	21 - 6	26-0†	26-0†	8 - 5	14 - 7	20 - 8	26-0†	26-0†	8 - 2	14 - 0	19 - 11	25 - 9	26-0†
	DFL	No.2	8 - 7	14 - 9	21 - 0	26-0†	26-0†	8 - 3	14 - 2	20 - 2	26-0†	26-0†	8 - 0	13 - 8	19 - 5	25 - 3	26-0†
	DFL	No.3	8 - 1	14 - 0	19 - 10	24 - 11	26-0†	7 - 10	13 - 2	18 - 7	23 - 9	26-0†	7 - 7	12 - 5	17 - 4	22 - 9	26-0†
	HF	SS	8 - 7	14 - 9	21 - 0	26-0†	26-0†	8 - 3	14 - 2	20 - 2	26-0†	26-0†	8 - 0	13 - 8	19 - 5	25 - 3	26-0†
	HF	No.1	8 - 4	14 - 4	20 - 5	26-0†	26-0†	8 - 1	13 - 10	19 - 7	25 - 6	26-0†	7 - 9	13 - 4	18 - 10	24 - 9	26-0†
	HF	No.2	7 - 11	13 - 6	19 - 2	25 - 1	26-0†	7 - 7	13 - 0	18 - 5	24 - 4	26-0†	7 - 4	12 - 7	17 - 9	23 - 7	26-0†
	HF	No.3	7 - 8	13 - 1	18 - 6	24 - 3	26-0†	7 - 5	12 - 7	17 - 10	23 - 2	26-0†	7 - 2	12 - 0	16 - 9	22 - 2	25 - 9
	SP	SS	9 - 0	15 - 6	21 - 11	26-0†	26-0†	8 - 8	14 - 11	21 - 3	26-0†	26-0†	8 - 4	14 - 4	20 - 5	26-0†	26-0†
	SP	No.1	8 - 7	14 - 9	21 - 0	26-0†	26-0†	8 - 3	14 - 2	20 - 2	26-0†	26-0†	8 - 0	13 - 8	19 - 5	25 - 3	26-0†
	SP	No.2	8 - 1	14 - 0	19 - 10	25 - 8	26-0†	7 - 10	13 - 5	19 - 0	24 - 11	26-0†	7 - 7	13 - 0	18 - 4	24 - 2	26-0†
	SP	No.3	7 - 6	12 - 6	17 - 4	22 - 7	26-0†	7 - 1	11 - 9	16 - 2	21 - 7	25 - 6	6 - 8	11 - 1	15 - 2	20 - 3	24 - 5
	SPF	SS	8 - 4	14 - 4	20 - 5	26-0†	26-0†	8 - 1	13 - 10	19 - 7	25 - 6	26-0†	7 - 9	13 - 4	18 - 10	24 - 9	26-0†
	SPF	No.1	8 - 1	14 - 0	19 - 10	25 - 8	26-0†	7 - 10	13 - 5	19 - 0	24 - 11	26-0†	7 - 7	13 - 0	18 - 4	24 - 2	26-0†
	SPF	No.2	8 - 1	14 - 0	19 - 10	25 - 8	26-0†	7 - 10	13 - 5	19 - 0	24 - 11	26-0†	7 - 7	13 - 0	18 - 4	24 - 2	26-0†
	SPF	No.3	7 - 8	13 - 1	18 - 6	24 - 3	26-0†	7 - 5	12 - 7	17 - 10	23 - 2	26-0†	7 - 2	12 - 0	16 - 9	22 - 2	25 - 9
16	DFL	SS	8 - 2	14 - 1	20 - 0	25 - 10	26-0†	7 - 11	13 - 6	19 - 2	25 - 1	26-0†	7 - 7	13 - 1	18 - 5	24 - 4	26-0†
	DFL	No.1	7 - 10	13 - 5	19 - 0	24 - 11	26-0†	7 - 7	12 - 11	18 - 3	24 - 2	26-0†	7 - 4	12 - 6	17 - 7	23 - 5	26-0†
	DFL	No.2	7 - 8	13 - 1	18 - 6	24 - 5	26-0†	7 - 5	12 - 7	17 - 10	23 - 8	26-0†	7 - 2	12 - 2	17 - 2	23 - 0	26-0†
	DFL	No.3	7 - 1	11 - 7	16 - 1	21 - 7	25 - 0	6 - 8	10 - 10	15 - 0	20 - 3	23 - 10	6 - 4	10 - 3	14 - 1	18 - 11	22 - 10
	HF	SS	7 - 8	13 - 1	18 - 6	24 - 5	26-0†	7 - 5	12 - 7	17 - 10	23 - 8	26-0†	7 - 2	12 - 2	17 - 2	23 - 0	26-0†
	HF	No.1	7 - 6	12 - 9	18 - 0	23 - 11	26-0†	7 - 2	12 - 3	17 - 4	23 - 2	26-0†	7 - 0	11 - 10	16 - 8	22 - 6	26-0†
	HF	No.2	7 - 1	12 - 0	17 - 0	22 - 9	26-0†	6 - 10	11 - 7	16 - 4	22 - 1	26-0†	6 - 7	11 - 2	15 - 8	21 - 5	26-0†
	HF	No.3	6 - 10	11 - 2	15 - 6	20 - 11	24 - 5	6 - 6	10 - 6	14 - 6	19 - 6	23 - 3	6 - 1	9 - 11	13 - 8	18 - 2	22 - 3
	SP	SS	8 - 0	13 - 9	19 - 6	25 - 5	26-0†	7 - 9	13 - 3	18 - 9	24 - 7	26-0†	7 - 6	12 - 9	18 - 0	23 - 11	26-0†
	SP	No.1	7 - 8	13 - 1	18 - 6	24 - 5	26-0†	7 - 5	12 - 7	17 - 10	23 - 8	26-0†	7 - 2	12 - 2	17 - 2	23 - 0	26-0†
	SP	No.2	7 - 3	12 - 5	17 - 6	23 - 4	26-0†	7 - 0	11 - 11	16 - 10	22 - 8	26-0†	6 - 9	11 - 6	16 - 2	22 - 0	26-0†
	SP	No.3	6 - 3	10 - 4	14 - 1	18 - 8	23 - 2	5 - 11	9 - 8	13 - 3	17 - 5	22 - 1	5 - 7	9 - 2	12 - 5	16 - 4	21 - 1
	SPF	SS	7 - 6	12 - 9	18 - 0	23 - 11	26-0†	7 - 2	12 - 3	17 - 4	23 - 2	26-0†	7 - 0	11 - 10	16 - 8	22 - 6	26-0†
	SPF	No.1	7 - 3	12 - 5	17 - 6	23 - 4	26-0†	7 - 0	11 - 11	16 - 10	22 - 8	26-0†	6 - 9	11 - 6	16 - 2	22 - 0	26-0†
	SPF	No.2	7 - 3	12 - 5	17 - 6	23 - 4	26-0†	7 - 0	11 - 11	16 - 10	22 - 8	26-0†	6 - 9	11 - 6	16 - 2	22 - 0	26-0†
	SPF	No.3	6 - 10	11 - 2	15 - 6	20 - 11	24 - 5	6 - 6	10 - 6	14 - 6	19 - 6	23 - 3	6 - 1	9 - 11	13 - 8	18 - 2	22 - 3
19.2	DFL	SS	7 - 7	13 - 1	18 - 5	24 - 4	26-0†	7 - 4	12 - 7	17 - 9	23 - 7	26-0†	7 - 1	12 - 1	17 - 1	22 - 11	26-0†
	DFL	No.1	7 - 4	12 - 6	17 - 7	23 - 5	26-0†	7 - 0	12 - 0	16 - 11	22 - 9	26-0†	6 - 10	11 - 7	16 - 3	22 - 1	26-0†
	DFL	No.2	7 - 2	12 - 2	17 - 2	23 - 0	26-0†	6 - 11	11 - 9	16 - 6	22 - 3	26-0†	6 - 8	11 - 4	15 - 10	21 - 7	26-0†
	DFL	No.3	6 - 4	10 - 3	14 - 1	18 - 10	22 - 10	5 - 11	9 - 8	13 - 3	17 - 7	21 - 9	5 - 8	9 - 1	12 - 5	16 - 6	20 - 7
	HF	SS	7 - 2	12 - 2	17 - 2	23 - 0	26-0†	6 - 11	11 - 9	16 - 6	22 - 3	26-0†	6 - 8	11 - 4	15 - 10	21 - 7	26-0†
	HF	No.1	7 - 0	11 - 10	16 - 8	22 - 6	26-0†	6 - 8	11 - 5	16 - 0	21 - 9	26-0†	6 - 6	11 - 0	15 - 5	21 - 2	25 - 9
	HF	No.2	6 - 7	11 - 2	15 - 8	21 - 5	26-0†	6 - 4	10 - 9	15 - 1	20 - 8	25 - 3	6 - 2	10 - 5	14 - 7	19 - 10	24 - 6
	HF	No.3	6 - 1	9 - 11	13 - 8	18 - 2	22 - 3	5 - 9	9 - 4	12 - 9	17 - 0	21 - 3	5 - 6	8 - 10	12 - 0	15 - 11	19 - 10
	SP	SS	7 - 6	12 - 9	18 - 0	23 - 11	26-0†	7 - 2	12 - 3	17 - 4	23 - 2	26-0†	7 - 0	11 - 10	16 - 8	22 - 6	26-0†
	SP	No.1	7 - 2	12 - 2	17 - 2	23 - 0	26-0†	6 - 11	11 - 9	16 - 6	22 - 3	26-0†	6 - 8	11 - 4	15 - 10	21 - 7	26-0†
	SP	No.2	6 - 9	11 - 6	16 - 2	22 - 0	26-0†	6 - 6	11 - 1	15 - 7	21 - 3	25 - 11	6 - 4	10 - 9	15 - 0	20 - 6	24 - 11
	SP	No.3	5 - 7	9 - 2	12 - 5	16 - 4	21 - 1	5 - 3	8 - 7	11 - 8	15 - 3	19 - 7	5 - 0	8 - 2	11 - 0	14 - 4	18 - 4
	SPF	SS	7 - 0	11 - 10	16 - 8	22 - 6	26-0†	6 - 8	11 - 5	16 - 0	21 - 9	26-0†	6 - 6	11 - 0	15 - 5	21 - 2	25 - 9
	SPF	No.1	6 - 9	11 - 6	16 - 2	22 - 0	26-0†	6 - 6	11 - 1	15 - 7	21 - 3	25 - 11	6 - 4	10 - 9	15 - 0	20 - 6	25 - 2
	SPF	No.2	6 - 9	11 - 6	16 - 2	22 - 0	26-0†	6 - 6	11 - 1	15 - 7	21 - 3	25 - 11	6 - 4	10 - 9	15 - 0	20 - 6	25 - 2
	SPF	No.3	6 - 1	9 - 11	13 - 8	18 - 2	22 - 3	5 - 9	9 - 4	12 - 9	17 - 0	21 - 3	5 - 6	8 - 10	12 - 0	15 - 11	19 - 10
24	DFL	SS	7 - 0	11 - 11	16 - 9	22 - 7	26-0†	6 - 9	11 - 6	16 - 1	21 - 11	26-0†	6 - 6	11 - 1	15 - 6	21 - 3	25 - 10
	DFL	No.1	6 - 8	11 - 5	16 - 0	21 - 9	26-0†	6 - 6	11 - 0	15 - 5	21 - 1	25 - 8	6 - 3	10 - 7	14 - 10	20 - 3	24 - 11
	DFL	No.2	6 - 6	11 - 1	15 - 7	21 - 4	25 - 11	6 - 4	10 - 9	15 - 0	20 - 6	25 - 2	6 - 1	10 - 4	14 - 6	19 - 8	24 - 5
	DFL	No.3	5 - 6	8 - 10	12 - 1	16 - 0	20 - 0	5 - 2	8 - 4	11 - 4	15 - 0	18 - 7	4 - 11	7 - 11	10 - 9	14 - 1	17 - 5
	HF	SS	6 - 6	11 - 1	15 - 7	21 - 4	25 - 11	6 - 4	10 - 9	15 - 0	20 - 6	25 - 2	6 - 1	10 - 4	14 - 6	19 - 8	24 - 5
	HF	No.1	6 - 5	10 - 10	15 - 2	20 - 9	25 - 4	6 - 2	10 - 5	14 - 7	19 - 11	24 - 7	6 - 0	10 - 1	14 - 1	19 - 2	23 - 11
	HF	No.2	6 - 0	10 - 3	14 - 4	19 - 6	24 - 2	5 - 10	9 - 10	13 - 9	18 - 9	23 - 5	5 - 8	9 - 6	13 - 3	18 - 0	22 - 9
	HF	No.3	5 - 4	8 - 7	11 - 8	15 - 5	19 - 3	5 - 0	8 - 1	11 - 0	14 - 6	17 - 11	4 - 9	7 - 8	10 - 4	13 - 7	16 - 9
	SP	SS	6 - 10	11 - 8	16 - 5	22 - 2	26-0†	6 - 7	11 - 3	15 - 9	21 - 6	26-0†	6 - 5	10 - 10	15 - 2	20 - 9	25 - 5
	SP	No.1	6 - 6	11 - 1	15 - 7	21 - 4	25 - 11	6 - 4	10 - 9	15 - 0	20 - 6	25 - 2	6 - 1	10 - 4	14 - 6	19 - 8	24 - 5
	SP	No.2	6 - 3	10 - 7	14 - 9	20 - 2	24 - 5	6 - 0	10 - 2	14 - 2	19 - 0	23 - 3	5 - 10	9 - 10	13 - 8	17 - 9	22 - 3
	SP	No.3	4 - 11	7 - 11	10 - 8	13 - 11	17 - 9	4 - 7	7 - 6	10 - 1	13 - 1	16 - 7	4 - 4	7 - 1	9 - 6	12 - 3	15 - 7
	SPF	SS	6 - 5	10 - 10	15 - 2	20 - 9	25 - 4	6 - 2	10 - 5	14 - 7	19 - 11	24 - 7	6 - 0	10 - 1	14 - 1	19 - 2	23 - 11
	SPF	No.1	6 - 3	10 - 7	14 - 9	20 - 2	24 - 10	6 - 0	10 - 2	14 - 2	19 - 4	24 - 0	5 - 10	9 - 10	13 - 8	18 - 7	23 - 4
	SPF	No.2	6 - 3	10 - 7	14 - 9	20 - 2	24 - 10	6 - 0	10 - 2	14 - 2	19 - 4	24 - 0	5 - 10	9 - 10	13 - 8	18 - 7	23 - 4
	SPF	No.3	5 - 4	8 - 7	11 - 8	15 - 5	19 - 3	5 - 0	8 - 1	11 - 0	14 - 6	17 - 11	4 - 9	7 - 8	10 - 4	13 - 7	16 - 9

[1] See Table 3.26M footnotes.

† Spans are limited to 26 feet in length.

Copyright © American Wood Council. Downloaded/printed pursuant to License Agreement. No reproduction or transfer authorized.

Table 3.26M (Cont.) **Rafter Deflection Limit = L/180**

Exposure B

Maximum Rafter Spans for Common Lumber Species Resisting Uplift Loads due to Wind (12:12 Slope)

Wind Speed 3-sec. Gust (mph) (See Figure 1.1)			120					130					140				
Rafter Spacing (in.)	Species	Grade	2x4	2x6	2x8	2x10	2x12	2x4	2x6	2x8	2x10	2x12	2x4	2x6	2x8	2x10	2x12
			Maximum Allowable Rafter Span (ft-in.)[1]														
12	DFL	SS	8 - 3	14 - 2	20 - 2	26-0†	26-0†	7 - 9	13 - 3	18 - 9	24 - 8	26-0†	7 - 4	12 - 6	17 - 7	23 - 6	26-0†
	DFL	No.1	7 - 11	13 - 6	19 - 2	25 - 1	26-0†	7 - 5	12 - 8	17 - 11	23 - 9	26-0†	7 - 0	11 - 11	16 - 10	22 - 7	26-0†
	DFL	No.2	7 - 9	13 - 3	18 - 8	24 - 7	26-0†	7 - 3	12 - 5	17 - 5	23 - 4	26-0†	6 - 10	11 - 8	16 - 5	22 - 2	26-0†
	DFL	No.3	7 - 2	11 - 9	16 - 4	21 - 9	25 - 3	6 - 6	10 - 6	14 - 6	19 - 6	23 - 4	5 - 11	9 - 7	13 - 1	17 - 5	21 - 8
	HF	SS	7 - 9	13 - 3	18 - 8	24 - 7	26-0†	7 - 3	12 - 5	17 - 5	23 - 4	26-0†	6 - 10	11 - 8	16 - 5	22 - 2	26-0†
	HF	No.1	7 - 6	12 - 10	18 - 2	24 - 1	26-0†	7 - 1	12 - 1	17 - 0	22 - 10	26-0†	6 - 8	11 - 4	15 - 11	21 - 8	26-0†
	HF	No.2	7 - 1	12 - 2	17 - 1	22 - 11	26-0†	6 - 8	11 - 5	16 - 0	21 - 9	26-0†	6 - 4	10 - 9	15 - 0	20 - 6	25 - 2
	HF	No.3	6 - 11	11 - 4	15 - 9	21 - 3	24 - 8	6 - 3	10 - 2	14 - 1	18 - 9	22 - 9	5 - 9	9 - 3	12 - 8	16 - 10	21 - 1
	SP	SS	8 - 1	13 - 10	19 - 8	25 - 7	26-0†	7 - 7	13 - 0	18 - 4	24 - 3	26-0†	7 - 2	12 - 3	17 - 3	23 - 1	26-0†
	SP	No.1	7 - 9	13 - 3	18 - 8	24 - 7	26-0†	7 - 3	12 - 5	17 - 5	23 - 4	26-0†	6 - 10	11 - 8	16 - 5	22 - 2	26-0†
	SP	No.2	7 - 4	12 - 6	17 - 8	23 - 6	26-0†	6 - 11	11 - 9	16 - 6	22 - 3	26-0†	6 - 6	11 - 1	15 - 6	21 - 2	25 - 9
	SP	No.3	6 - 4	10 - 6	14 - 4	19 - 0	23 - 5	5 - 9	9 - 5	12 - 10	16 - 10	21 - 7	5 - 3	8 - 7	11 - 7	15 - 2	19 - 5
	SPF	SS	7 - 6	12 - 10	18 - 2	24 - 1	26-0†	7 - 1	12 - 1	17 - 0	22 - 10	26-0†	6 - 8	11 - 4	15 - 11	21 - 8	26-0†
	SPF	No.1	7 - 4	12 - 6	17 - 8	23 - 6	26-0†	6 - 11	11 - 9	16 - 6	22 - 3	26-0†	6 - 6	11 - 1	15 - 6	21 - 2	25 - 9
	SPF	No.2	7 - 4	12 - 6	17 - 8	23 - 6	26-0†	6 - 11	11 - 9	16 - 6	22 - 3	26-0†	6 - 6	11 - 1	15 - 6	21 - 2	25 - 9
	SPF	No.3	6 - 11	11 - 4	15 - 9	21 - 3	24 - 8	6 - 3	10 - 2	14 - 1	18 - 9	22 - 9	5 - 9	9 - 3	12 - 8	16 - 10	21 - 1
16	DFL	SS	7 - 4	12 - 7	17 - 9	23 - 8	26-0†	6 - 11	11 - 10	16 - 7	22 - 5	26-0†	6 - 7	11 - 2	15 - 7	21 - 4	25 - 11
	DFL	No.1	7 - 1	12 - 1	17 - 0	22 - 9	26-0†	6 - 8	11 - 4	15 - 10	21 - 7	26-0†	6 - 3	10 - 8	14 - 11	20 - 4	25 - 0
	DFL	No.2	6 - 11	11 - 9	16 - 6	22 - 4	26-0†	6 - 6	11 - 0	15 - 5	21 - 2	25 - 9	6 - 2	10 - 5	14 - 6	19 - 10	24 - 6
	DFL	No.3	6 - 0	9 - 8	13 - 4	17 - 8	21 - 10	5 - 5	8 - 9	11 - 11	15 - 9	19 - 8	4 - 11	7 - 11	10 - 10	14 - 2	17 - 7
	HF	SS	6 - 11	11 - 9	16 - 6	22 - 4	26-0†	6 - 6	11 - 0	15 - 5	21 - 2	25 - 9	6 - 2	10 - 5	14 - 6	19 - 10	24 - 6
	HF	No.1	6 - 9	11 - 5	16 - 1	21 - 10	26-0†	6 - 4	10 - 9	15 - 1	20 - 7	25 - 2	6 - 0	10 - 2	14 - 2	19 - 3	24 - 0
	HF	No.2	6 - 4	10 - 10	15 - 2	20 - 8	25 - 4	6 - 0	10 - 2	14 - 2	19 - 4	24 - 0	5 - 8	9 - 7	13 - 4	18 - 1	22 - 10
	HF	No.3	5 - 10	9 - 5	12 - 10	17 - 1	21 - 4	5 - 3	8 - 6	11 - 6	15 - 3	18 - 11	4 - 10	7 - 8	10 - 5	13 - 8	16 - 11
	SP	SS	7 - 3	12 - 4	17 - 4	23 - 3	26-0†	6 - 9	11 - 7	16 - 3	22 - 0	26-0†	6 - 5	10 - 11	15 - 3	20 - 10	25 - 6
	SP	No.1	6 - 11	11 - 9	16 - 6	22 - 4	26-0†	6 - 6	11 - 0	15 - 5	21 - 2	25 - 9	6 - 2	10 - 5	14 - 6	19 - 10	24 - 6
	SP	No.2	6 - 7	11 - 2	15 - 8	21 - 4	26 - 0	6 - 2	10 - 5	14 - 7	19 - 11	24 - 2	5 - 10	9 - 10	13 - 9	17 - 11	22 - 5
	SP	No.3	5 - 4	8 - 8	11 - 9	15 - 4	19 - 9	4 - 10	7 - 10	10 - 7	13 - 9	17 - 6	4 - 5	7 - 2	9 - 7	12 - 5	15 - 8
	SPF	SS	6 - 9	11 - 5	16 - 1	21 - 10	26-0†	6 - 4	10 - 9	15 - 1	20 - 7	25 - 2	6 - 0	10 - 2	14 - 2	19 - 3	24 - 0
	SPF	No.1	6 - 7	11 - 2	15 - 8	21 - 4	26 - 0	6 - 2	10 - 5	14 - 7	19 - 11	24 - 7	5 - 10	9 - 10	13 - 9	18 - 8	23 - 5
	SPF	No.2	6 - 7	11 - 2	15 - 8	21 - 4	26 - 0	6 - 2	10 - 5	14 - 7	19 - 11	24 - 7	5 - 10	9 - 10	13 - 9	18 - 8	23 - 5
	SPF	No.3	5 - 10	9 - 5	12 - 10	17 - 1	21 - 4	5 - 3	8 - 6	11 - 6	15 - 3	18 - 11	4 - 10	7 - 8	10 - 5	13 - 8	16 - 11
19.2	DFL	SS	6 - 10	11 - 8	16 - 5	22 - 3	26-0†	6 - 6	11 - 0	15 - 5	21 - 1	25 - 8	6 - 1	10 - 4	14 - 6	19 - 9	24 - 5
	DFL	No.1	6 - 7	11 - 2	15 - 8	21 - 5	26-0†	6 - 2	10 - 6	14 - 8	20 - 1	24 - 9	5 - 10	9 - 11	13 - 10	18 - 10	23 - 6
	DFL	No.2	6 - 5	10 - 11	15 - 4	20 - 11	25 - 7	6 - 1	10 - 3	14 - 4	19 - 6	24 - 2	5 - 9	9 - 8	13 - 6	18 - 4	22 - 5
	DFL	No.3	5 - 4	8 - 7	11 - 9	15 - 6	19 - 4	4 - 10	7 - 9	10 - 7	13 - 10	17 - 1	4 - 5	7 - 1	9 - 7	12 - 6	15 - 4
	HF	SS	6 - 5	10 - 11	15 - 4	20 - 11	25 - 7	6 - 1	10 - 3	14 - 4	19 - 6	24 - 3	5 - 9	9 - 8	13 - 6	18 - 4	23 - 1
	HF	No.1	6 - 3	10 - 8	14 - 11	20 - 4	25 - 0	5 - 11	10 - 0	14 - 0	19 - 0	23 - 8	5 - 7	9 - 5	13 - 2	17 - 10	22 - 7
	HF	No.2	5 - 11	10 - 1	14 - 1	19 - 1	23 - 10	5 - 7	9 - 5	13 - 2	17 - 10	22 - 7	5 - 3	8 - 11	12 - 5	16 - 9	21 - 6
	HF	No.3	5 - 2	8 - 4	11 - 4	15 - 0	18 - 7	4 - 8	7 - 6	10 - 3	13 - 5	16 - 6	4 - 4	6 - 10	9 - 3	12 - 1	14 - 10
	SP	SS	6 - 9	11 - 5	16 - 1	21 - 10	26-0†	6 - 4	10 - 9	15 - 1	20 - 7	25 - 2	6 - 0	10 - 2	14 - 2	19 - 3	24 - 0
	SP	No.1	6 - 5	10 - 11	15 - 4	20 - 11	25 - 7	6 - 1	10 - 3	14 - 4	19 - 6	24 - 3	5 - 9	9 - 8	13 - 6	18 - 4	23 - 1
	SP	No.2	6 - 1	10 - 4	14 - 6	19 - 9	23 - 10	5 - 9	9 - 9	13 - 7	17 - 6	22 - 0	5 - 5	9 - 0	12 - 4	15 - 8	20 - 0
	SP	No.3	4 - 9	7 - 9	10 - 5	13 - 6	17 - 2	4 - 4	7 - 0	9 - 4	12 - 1	15 - 4	3 - 11	6 - 4	8 - 6	11 - 0	13 - 9
	SPF	SS	6 - 3	10 - 8	14 - 11	20 - 4	25 - 0	5 - 11	10 - 0	14 - 0	19 - 0	23 - 8	5 - 7	9 - 5	13 - 2	17 - 10	22 - 7
	SPF	No.1	6 - 1	10 - 4	14 - 6	19 - 9	24 - 5	5 - 9	9 - 9	13 - 7	18 - 5	23 - 2	5 - 5	9 - 2	12 - 9	17 - 4	22 - 1
	SPF	No.2	6 - 1	10 - 4	14 - 6	19 - 9	24 - 5	5 - 9	9 - 9	13 - 7	18 - 5	23 - 2	5 - 5	9 - 2	12 - 9	17 - 4	22 - 1
	SPF	No.3	5 - 2	8 - 4	11 - 4	15 - 0	18 - 7	4 - 8	7 - 6	10 - 3	13 - 5	16 - 6	4 - 4	6 - 10	9 - 3	12 - 1	14 - 10
24	DFL	SS	6 - 4	10 - 8	15 - 0	20 - 6	25 - 1	5 - 11	10 - 1	14 - 0	19 - 1	23 - 10	5 - 7	9 - 6	13 - 2	17 - 11	22 - 8
	DFL	No.1	6 - 1	10 - 3	14 - 4	19 - 6	24 - 2	5 - 8	9 - 7	13 - 5	18 - 2	22 - 9	5 - 4	9 - 1	12 - 7	16 - 10	21 - 1
	DFL	No.2	5 - 11	10 - 0	14 - 0	19 - 0	23 - 5	5 - 7	9 - 5	13 - 1	17 - 4	21 - 7	5 - 3	8 - 8	11 - 10	15 - 7	19 - 5
	DFL	No.3	4 - 8	7 - 6	10 - 1	13 - 3	16 - 4	4 - 3	6 - 9	9 - 1	11 - 11	14 - 7	3 - 11	6 - 2	8 - 3	10 - 9	13 - 2
	HF	SS	5 - 11	10 - 0	14 - 0	19 - 0	23 - 9	5 - 7	9 - 5	13 - 1	17 - 9	22 - 6	5 - 3	8 - 10	12 - 4	16 - 8	21 - 5
	HF	No.1	5 - 9	9 - 9	13 - 7	18 - 6	23 - 3	5 - 5	9 - 2	12 - 9	17 - 3	22 - 0	5 - 1	8 - 8	12 - 0	16 - 2	20 - 8
	HF	No.2	5 - 5	9 - 3	12 - 10	17 - 4	22 - 2	5 - 2	8 - 8	12 - 0	16 - 3	20 - 10	4 - 10	8 - 2	11 - 4	15 - 0	18 - 7
	HF	No.3	4 - 6	7 - 3	9 - 10	12 - 10	15 - 9	4 - 1	6 - 7	8 - 10	11 - 6	14 - 1	3 - 9	6 - 0	8 - 0	10 - 5	12 - 9
	SP	SS	6 - 2	10 - 6	14 - 8	20 - 0	24 - 8	5 - 10	9 - 10	13 - 9	18 - 8	23 - 5	5 - 6	9 - 3	12 - 11	17 - 6	22 - 3
	SP	No.1	5 - 11	10 - 0	14 - 0	19 - 0	23 - 9	5 - 7	9 - 5	13 - 1	17 - 9	22 - 6	5 - 3	8 - 10	12 - 4	16 - 3	21 - 1
	SP	No.2	5 - 7	9 - 6	13 - 1	16 - 8	21 - 4	5 - 2	8 - 7	11 - 9	14 - 11	18 - 11	4 - 9	7 - 10	10 - 8	13 - 5	16 - 11
	SP	No.3	4 - 2	6 - 8	9 - 0	11 - 7	14 - 8	3 - 9	6 - 1	8 - 1	10 - 5	13 - 1	3 - 5	5 - 6	7 - 5	9 - 6	11 - 10
	SPF	SS	5 - 9	9 - 9	13 - 7	18 - 6	23 - 3	5 - 5	9 - 2	12 - 9	17 - 3	22 - 0	5 - 1	8 - 8	12 - 0	16 - 2	20 - 10
	SPF	No.1	5 - 7	9 - 6	13 - 3	17 - 11	22 - 8	5 - 3	8 - 11	12 - 5	16 - 9	21 - 3	5 - 0	8 - 5	11 - 7	15 - 3	19 - 0
	SPF	No.2	5 - 7	9 - 6	13 - 3	17 - 11	22 - 8	5 - 3	8 - 11	12 - 5	16 - 9	21 - 3	5 - 0	8 - 5	11 - 7	15 - 3	19 - 0
	SPF	No.3	4 - 6	7 - 3	9 - 10	12 - 10	15 - 9	4 - 1	6 - 7	8 - 10	11 - 6	14 - 1	3 - 9	6 - 0	8 - 0	10 - 5	12 - 9

[1] See Table 3.26M footnotes.

† Spans are limited to 26 feet in length.

Copyright © American Wood Council. Downloaded/printed pursuant to License Agreement. No reproduction or transfer authorized.

Table 3.26M (Cont.) Rafter Deflection Limit = L/180

Exposure B

Maximum Rafter Spans for Common Lumber Species Resisting Uplift Loads due to Wind (12:12 Slope)

Wind Speed 3-second gust (mph) (See Figure 1.1)			150					160					170				
Rafter Spacing (in.)	Species	Grade	2x4	2x6	2x8	2x10	2x12	2x4	2x6	2x8	2x10	2x12	2x4	2x6	2x8	2x10	2x12
			Maximum Allowable Rafter Span (ft-in.)[1]														
12	DFL	SS	6 - 11	11 - 10	16 - 7	22 - 5	26-0†	6 - 7	11 - 3	15 - 9	21 - 6	26-0†	6 - 4	10 - 8	15 - 0	20 - 5	25 - 1
	DFL	No.1	6 - 8	11 - 4	15 - 10	21 - 7	26-0†	6 - 4	10 - 9	15 - 0	20 - 6	25 - 2	6 - 0	10 - 3	14 - 4	19 - 6	24 - 2
	DFL	No.2	6 - 6	11 - 0	15 - 6	21 - 2	25 - 9	6 - 2	10 - 6	14 - 8	20 - 0	24 - 8	5 - 11	10 - 0	13 - 11	19 - 0	23 - 4
	DFL	No.3	5 - 5	8 - 9	11 - 11	15 - 9	19 - 8	5 - 0	8 - 1	10 - 11	14 - 5	17 - 10	4 - 8	7 - 5	10 - 1	13 - 3	16 - 4
	HF	SS	6 - 6	11 - 0	15 - 6	21 - 2	25 - 9	6 - 2	10 - 6	14 - 8	20 - 0	24 - 8	5 - 11	10 - 0	13 - 11	19 - 0	23 - 8
	HF	No.1	6 - 4	10 - 9	15 - 1	20 - 7	25 - 2	6 - 0	10 - 3	14 - 3	19 - 5	24 - 2	5 - 9	9 - 9	13 - 7	18 - 5	23 - 2
	HF	No.2	6 - 0	10 - 2	14 - 2	19 - 4	24 - 0	5 - 8	9 - 8	13 - 5	18 - 3	23 - 0	5 - 5	9 - 2	12 - 10	17 - 4	22 - 1
	HF	No.3	5 - 3	8 - 6	11 - 7	15 - 3	18 - 11	4 - 10	7 - 10	10 - 7	13 - 11	17 - 2	4 - 6	7 - 3	9 - 9	12 - 9	15 - 9
	SP	SS	6 - 9	11 - 7	16 - 3	22 - 0	26-0†	6 - 6	11 - 0	15 - 5	21 - 1	25 - 8	6 - 2	10 - 6	14 - 8	20 - 0	24 - 8
	SP	No.1	6 - 6	11 - 0	15 - 6	21 - 2	25 - 9	6 - 2	10 - 6	14 - 8	20 - 0	24 - 8	5 - 11	10 - 0	13 - 11	19 - 0	23 - 8
	SP	No.2	6 - 2	10 - 5	14 - 8	20 - 0	24 - 5	5 - 10	9 - 11	13 - 10	18 - 4	22 - 11	5 - 7	9 - 6	13 - 1	16 - 9	21 - 7
	SP	No.3	4 - 10	7 - 10	10 - 7	13 - 9	17 - 3	4 - 6	7 - 3	9 - 8	12 - 7	15 - 9	4 - 2	6 - 8	9 - 0	11 - 7	14 - 5
	SPF	SS	6 - 4	10 - 9	15 - 1	20 - 7	25 - 2	6 - 0	10 - 3	14 - 3	19 - 5	24 - 2	5 - 9	9 - 9	13 - 7	18 - 5	23 - 2
	SPF	No.1	6 - 2	10 - 5	14 - 8	20 - 0	24 - 8	5 - 10	9 - 11	13 - 10	18 - 10	23 - 7	5 - 7	9 - 6	13 - 2	17 - 11	22 - 8
	SPF	No.2	6 - 2	10 - 5	14 - 8	20 - 0	24 - 8	5 - 10	9 - 11	13 - 10	18 - 10	23 - 7	5 - 7	9 - 6	13 - 2	17 - 11	22 - 8
	SPF	No.3	5 - 3	8 - 6	11 - 7	15 - 3	18 - 11	4 - 10	7 - 10	10 - 7	13 - 11	17 - 2	4 - 6	7 - 3	9 - 9	12 - 9	15 - 9
16	DFL	SS	6 - 2	10 - 6	14 - 9	20 - 1	24 - 9	5 - 11	10 - 0	14 - 0	19 - 0	23 - 9	5 - 8	9 - 6	13 - 4	18 - 1	22 - 10
	DFL	No.1	5 - 11	10 - 1	14 - 1	19 - 2	23 - 10	5 - 8	9 - 7	13 - 4	18 - 1	22 - 8	5 - 5	9 - 2	12 - 9	17 - 0	21 - 4
	DFL	No.2	5 - 10	9 - 10	13 - 9	18 - 8	22 - 11	5 - 6	9 - 4	13 - 0	17 - 3	21 - 6	5 - 3	8 - 9	11 - 11	15 - 9	19 - 8
	DFL	No.3	4 - 7	7 - 3	9 - 10	12 - 11	15 - 10	4 - 3	6 - 9	9 - 1	11 - 10	14 - 6	3 - 11	6 - 3	8 - 5	10 - 11	13 - 4
	HF	SS	5 - 10	9 - 10	13 - 9	18 - 8	23 - 5	5 - 6	9 - 4	13 - 0	17 - 8	22 - 5	5 - 3	8 - 11	12 - 5	16 - 9	21 - 6
	HF	No.1	5 - 8	9 - 7	13 - 4	18 - 2	22 - 11	5 - 5	9 - 1	12 - 8	17 - 2	21 - 11	5 - 2	8 - 8	12 - 1	16 - 4	20 - 11
	HF	No.2	5 - 4	9 - 1	12 - 7	17 - 1	21 - 10	5 - 1	8 - 7	12 - 0	16 - 2	20 - 8	4 - 11	8 - 3	11 - 5	15 - 2	18 - 10
	HF	No.3	4 - 5	7 - 1	9 - 7	12 - 6	15 - 4	4 - 1	6 - 6	8 - 9	11 - 5	14 - 0	3 - 10	6 - 0	8 - 1	10 - 6	12 - 10
	SP	SS	6 - 1	10 - 4	14 - 5	19 - 8	24 - 4	5 - 9	9 - 10	13 - 8	18 - 7	23 - 4	5 - 6	9 - 4	13 - 0	17 - 8	22 - 5
	SP	No.1	5 - 10	9 - 10	13 - 9	18 - 8	23 - 5	5 - 6	9 - 4	13 - 0	17 - 8	22 - 5	5 - 3	8 - 11	12 - 5	16 - 9	21 - 6
	SP	No.2	5 - 6	9 - 4	12 - 9	16 - 4	21 - 2	5 - 2	8 - 7	11 - 8	14 - 10	19 - 2	4 - 9	7 - 11	10 - 9	13 - 8	17 - 6
	SP	No.3	4 - 1	6 - 6	8 - 9	11 - 4	14 - 1	3 - 9	6 - 0	8 - 1	10 - 5	12 - 10	3 - 6	5 - 7	7 - 6	9 - 7	11 - 10
	SPF	SS	5 - 8	9 - 7	13 - 4	18 - 2	22 - 11	5 - 5	9 - 1	12 - 8	17 - 2	21 - 11	5 - 2	8 - 8	12 - 1	16 - 4	21 - 0
	SPF	No.1	5 - 6	9 - 4	13 - 0	17 - 7	22 - 5	5 - 3	8 - 10	12 - 4	16 - 8	21 - 2	5 - 0	8 - 6	11 - 9	15 - 6	19 - 3
	SPF	No.2	5 - 6	9 - 4	13 - 0	17 - 7	22 - 5	5 - 3	8 - 10	12 - 4	16 - 8	21 - 2	5 - 0	8 - 6	11 - 9	15 - 6	19 - 3
	SPF	No.3	4 - 5	7 - 1	9 - 7	12 - 6	15 - 4	4 - 1	6 - 6	8 - 9	11 - 5	14 - 0	3 - 10	6 - 0	8 - 1	10 - 6	12 - 10
19.2	DFL	SS	5 - 9	9 - 10	13 - 8	18 - 7	23 - 4	5 - 6	9 - 4	13 - 0	17 - 7	22 - 4	5 - 3	8 - 11	12 - 4	16 - 8	21 - 5
	DFL	No.1	5 - 7	9 - 5	13 - 1	17 - 9	22 - 1	5 - 3	8 - 11	12 - 4	16 - 4	20 - 4	5 - 1	8 - 4	11 - 4	14 - 11	18 - 7
	DFL	No.2	5 - 5	9 - 2	12 - 6	16 - 7	20 - 9	5 - 2	8 - 5	11 - 6	15 - 1	18 - 9	4 - 10	7 - 9	10 - 7	13 - 10	17 - 2
	DFL	No.3	4 - 1	6 - 6	8 - 9	11 - 5	13 - 11	3 - 9	6 - 0	8 - 1	10 - 5	12 - 9	3 - 6	5 - 7	7 - 6	9 - 8	11 - 9
	HF	SS	5 - 5	9 - 2	12 - 9	17 - 3	22 - 0	5 - 2	8 - 8	12 - 1	16 - 4	21 - 1	4 - 11	8 - 4	11 - 6	15 - 6	20 - 0
	HF	No.1	5 - 3	8 - 11	12 - 5	16 - 10	21 - 7	5 - 0	8 - 6	11 - 9	15 - 11	20 - 0	4 - 10	8 - 1	11 - 2	14 - 8	18 - 2
	HF	No.2	5 - 0	8 - 5	11 - 9	15 - 10	19 - 10	4 - 9	8 - 0	11 - 0	14 - 6	18 - 0	4 - 7	7 - 6	10 - 2	13 - 4	16 - 5
	HF	No.3	4 - 0	6 - 4	8 - 6	11 - 0	13 - 6	3 - 8	5 - 10	7 - 10	10 - 1	12 - 4	3 - 5	5 - 5	7 - 3	9 - 4	11 - 4
	SP	SS	5 - 8	9 - 7	13 - 4	18 - 2	22 - 11	5 - 5	9 - 1	12 - 8	17 - 2	21 - 11	5 - 2	8 - 8	12 - 1	16 - 4	21 - 0
	SP	No.1	5 - 5	9 - 2	12 - 9	17 - 3	22 - 0	5 - 2	8 - 8	12 - 1	16 - 4	21 - 0	4 - 11	8 - 4	11 - 6	14 - 11	19 - 1
	SP	No.2	5 - 0	8 - 3	11 - 3	14 - 4	18 - 5	4 - 7	7 - 7	10 - 4	13 - 1	16 - 8	4 - 3	7 - 1	9 - 7	12 - 1	15 - 4
	SP	No.3	3 - 8	5 - 10	7 - 9	10 - 0	12 - 5	3 - 4	5 - 5	7 - 2	9 - 3	11 - 4	3 - 2	5 - 0	6 - 8	8 - 6	10 - 6
	SPF	SS	5 - 3	8 - 11	12 - 5	16 - 10	21 - 7	5 - 0	8 - 6	11 - 9	15 - 11	20 - 5	4 - 10	8 - 1	11 - 3	15 - 1	19 - 5
	SPF	No.1	5 - 2	8 - 8	12 - 1	16 - 3	20 - 3	4 - 11	8 - 3	11 - 3	14 - 10	18 - 4	4 - 8	7 - 8	10 - 5	13 - 7	16 - 10
	SPF	No.2	5 - 2	8 - 8	12 - 1	16 - 3	20 - 3	4 - 11	8 - 3	11 - 3	14 - 10	18 - 4	4 - 8	7 - 8	10 - 5	13 - 7	16 - 10
	SPF	No.3	4 - 0	6 - 4	8 - 6	11 - 0	13 - 6	3 - 8	5 - 10	7 - 10	10 - 1	12 - 4	3 - 5	5 - 5	7 - 3	9 - 4	11 - 4
24	DFL	SS	5 - 4	9 - 0	12 - 6	16 - 11	21 - 8	5 - 1	8 - 6	11 - 10	16 - 0	20 - 7	4 - 10	8 - 2	11 - 3	15 - 2	19 - 6
	DFL	No.1	5 - 1	8 - 6	11 - 7	15 - 3	18 - 11	4 - 10	7 - 10	10 - 7	13 - 11	17 - 2	4 - 6	7 - 3	9 - 9	12 - 9	15 - 9
	DFL	No.2	4 - 11	7 - 11	10 - 9	14 - 2	17 - 6	4 - 7	7 - 4	9 - 11	12 - 11	15 - 11	4 - 3	6 - 9	9 - 2	11 - 11	14 - 7
	DFL	No.3	3 - 7	5 - 8	7 - 7	9 - 10	12 - 0	3 - 4	5 - 3	7 - 0	9 - 0	11 - 0	3 - 1	4 - 10	6 - 6	8 - 4	10 - 1
	HF	SS	5 - 0	8 - 5	11 - 8	15 - 9	20 - 2	4 - 9	8 - 0	11 - 1	14 - 11	19 - 1	4 - 6	7 - 7	10 - 6	14 - 2	18 - 1
	HF	No.1	4 - 10	8 - 2	11 - 4	15 - 0	18 - 7	4 - 8	7 - 8	10 - 5	13 - 8	16 - 10	4 - 5	7 - 1	9 - 7	12 - 7	15 - 5
	HF	No.2	4 - 7	7 - 8	10 - 4	13 - 7	16 - 9	4 - 5	7 - 0	9 - 6	12 - 5	15 - 3	4 - 1	6 - 6	8 - 10	11 - 5	14 - 0
	HF	No.3	3 - 6	5 - 6	7 - 4	9 - 6	11 - 7	3 - 3	5 - 1	6 - 9	8 - 9	10 - 7	3 - 0	4 - 9	6 - 4	8 - 1	9 - 10
	SP	SS	5 - 3	8 - 9	12 - 3	16 - 6	21 - 3	5 - 0	8 - 4	11 - 7	15 - 8	20 - 1	4 - 9	8 - 0	11 - 1	14 - 10	19 - 1
	SP	No.1	5 - 0	8 - 5	11 - 8	15 - 3	19 - 6	4 - 9	8 - 0	10 - 11	13 - 11	17 - 8	4 - 6	7 - 5	10 - 1	12 - 9	16 - 2
	SP	No.2	4 - 4	7 - 2	9 - 9	12 - 3	15 - 7	4 - 0	6 - 7	8 - 11	11 - 3	14 - 3	3 - 9	6 - 2	8 - 3	10 - 5	13 - 1
	SP	No.3	3 - 2	5 - 1	6 - 9	8 - 8	10 - 8	3 - 0	4 - 8	6 - 3	8 - 0	9 - 10	2 - 9	4 - 4	5 - 10	7 - 5	9 - 1
	SPF	SS	4 - 10	8 - 2	11 - 4	15 - 4	19 - 8	4 - 8	7 - 9	10 - 9	14 - 6	18 - 7	4 - 5	7 - 5	10 - 3	13 - 9	17 - 8
	SPF	No.1	4 - 9	7 - 9	10 - 7	13 - 10	17 - 2	4 - 6	7 - 2	9 - 8	12 - 8	15 - 7	4 - 2	6 - 8	9 - 0	11 - 8	14 - 4
	SPF	No.2	4 - 9	7 - 9	10 - 7	13 - 10	17 - 2	4 - 6	7 - 2	9 - 8	12 - 8	15 - 7	4 - 2	6 - 8	9 - 0	11 - 8	14 - 4
	SPF	No.3	3 - 6	5 - 6	7 - 4	9 - 6	11 - 7	3 - 3	5 - 1	6 - 9	8 - 9	10 - 7	3 - 0	4 - 9	6 - 4	8 - 1	9 - 10

[1] See Table 3.26M footnotes.

† Spans are limited to 26 feet in length.

Copyright © American Wood Council. Downloaded/printed pursuant to License Agreement. No reproduction or transfer authorized.

Table 3.26M (Cont.) **Rafter Deflection Limit = L/180**

Exposure B

Maximum Rafter Spans for Common Lumber Species Resisting Uplift Loads due to Wind (12:12 Slope)

Wind Speed 3-second gust (mph) (See Figure 1.1)			180					195				
Rafter Spacing (in.)	Species	Grade	2x4	2x6	2x8	2x10	2x12	2x4	2x6	2x8	2x10	2x12
			Maximum Allowable Rafter Span (ft-in.)[1]									
12	DFL	SS	6 - 0	10 - 3	14 - 3	19 - 5	24 - 2	5 - 8	9 - 7	13 - 4	18 - 2	22 - 11
	DFL	No.1	5 - 9	9 - 9	13 - 8	18 - 6	23 - 3	5 - 5	9 - 2	12 - 9	17 - 2	21 - 5
	DFL	No.2	5 - 8	9 - 7	13 - 4	17 - 11	22 - 1	5 - 4	8 - 10	12 - 1	15 - 11	19 - 10
	DFL	No.3	4 - 4	6 - 11	9 - 4	12 - 3	15 - 0	3 - 11	6 - 3	8 - 5	11 - 0	13 - 5
	HF	SS	5 - 8	9 - 7	13 - 4	18 - 1	22 - 10	5 - 4	9 - 0	12 - 6	16 - 10	21 - 7
	HF	No.1	5 - 6	9 - 4	13 - 0	17 - 7	22 - 4	5 - 2	8 - 9	12 - 2	16 - 5	21 - 2
	HF	No.2	5 - 3	8 - 10	12 - 3	16 - 6	21 - 3	4 - 11	8 - 3	11 - 6	15 - 4	19 - 0
	HF	No.3	4 - 3	6 - 9	9 - 1	11 - 10	14 - 6	3 - 10	6 - 1	8 - 2	10 - 8	13 - 0
	SP	SS	5 - 11	10 - 0	14 - 0	19 - 0	23 - 9	5 - 7	9 - 5	13 - 1	17 - 9	22 - 6
	SP	No.1	5 - 8	9 - 7	13 - 4	18 - 1	22 - 10	5 - 4	9 - 0	12 - 6	16 - 10	21 - 7
	SP	No.2	5 - 4	8 - 10	12 - 1	15 - 5	19 - 11	4 - 10	8 - 0	10 - 10	13 - 9	17 - 8
	SP	No.3	3 - 10	6 - 3	8 - 4	10 - 9	13 - 4	3 - 6	5 - 8	7 - 6	9 - 8	11 - 11
	SPF	SS	5 - 6	9 - 4	13 - 0	17 - 7	22 - 4	5 - 2	8 - 9	12 - 2	16 - 5	21 - 2
	SPF	No.1	5 - 4	9 - 1	12 - 7	17 - 1	21 - 9	5 - 1	8 - 6	11 - 10	15 - 7	19 - 5
	SPF	No.2	5 - 4	9 - 1	12 - 7	17 - 1	21 - 9	5 - 1	8 - 6	11 - 10	15 - 7	19 - 5
	SPF	No.3	4 - 3	6 - 9	9 - 1	11 - 10	14 - 6	3 - 10	6 - 1	8 - 2	10 - 8	13 - 0
16	DFL	SS	5 - 5	9 - 1	12 - 8	17 - 2	21 - 11	5 - 1	8 - 7	11 - 11	16 - 1	20 - 8
	DFL	No.1	5 - 2	8 - 8	11 - 10	15 - 8	19 - 6	4 - 10	7 - 10	10 - 8	14 - 0	17 - 4
	DFL	No.2	5 - 1	8 - 2	11 - 1	14 - 7	18 - 0	4 - 7	7 - 4	9 - 11	13 - 0	16 - 0
	DFL	No.3	3 - 8	5 - 10	7 - 9	10 - 1	12 - 4	3 - 4	5 - 3	7 - 0	9 - 1	11 - 0
	HF	SS	5 - 1	8 - 6	11 - 10	16 - 0	20 - 7	4 - 9	8 - 0	11 - 1	15 - 0	19 - 2
	HF	No.1	4 - 11	8 - 4	11 - 6	15 - 5	19 - 2	4 - 8	7 - 9	10 - 6	13 - 9	17 - 0
	HF	No.2	4 - 8	7 - 10	10 - 8	14 - 0	17 - 3	4 - 5	7 - 1	9 - 7	12 - 6	15 - 5
	HF	No.3	3 - 7	5 - 8	7 - 7	9 - 9	11 - 11	3 - 3	5 - 1	6 - 10	8 - 10	10 - 8
	SP	SS	5 - 3	8 - 11	12 - 5	16 - 10	21 - 7	5 - 0	8 - 5	11 - 8	15 - 8	20 - 2
	SP	No.1	5 - 1	8 - 6	11 - 10	15 - 8	20 - 1	4 - 9	8 - 0	11 - 0	14 - 0	17 - 10
	SP	No.2	4 - 6	7 - 4	10 - 0	12 - 7	16 - 1	4 - 1	6 - 8	9 - 0	11 - 4	14 - 4
	SP	No.3	3 - 3	5 - 3	6 - 11	8 - 11	11 - 0	3 - 0	4 - 9	6 - 3	8 - 0	9 - 10
	SPF	SS	4 - 11	8 - 4	11 - 6	15 - 7	20 - 0	4 - 8	7 - 10	10 - 10	14 - 7	18 - 8
	SPF	No.1	4 - 10	8 - 0	10 - 10	14 - 3	17 - 8	4 - 6	7 - 3	9 - 9	12 - 9	15 - 9
	SPF	No.2	4 - 10	8 - 0	10 - 10	14 - 3	17 - 8	4 - 6	7 - 3	9 - 9	12 - 9	15 - 9
	SPF	No.3	3 - 7	5 - 8	7 - 7	9 - 9	11 - 11	3 - 3	5 - 1	6 - 10	8 - 10	10 - 8
19.2	DFL	SS	5 - 0	8 - 6	11 - 9	15 - 11	20 - 6	4 - 9	8 - 0	11 - 1	14 - 11	19 - 1
	DFL	No.1	4 - 10	7 - 9	10 - 6	13 - 9	17 - 0	4 - 5	7 - 0	9 - 6	12 - 4	15 - 2
	DFL	No.2	4 - 6	7 - 3	9 - 10	12 - 10	15 - 9	4 - 1	6 - 7	8 - 10	11 - 6	14 - 1
	DFL	No.3	3 - 3	5 - 2	6 - 11	9 - 0	10 - 11	3 - 0	4 - 8	6 - 3	8 - 1	9 - 9
	HF	SS	4 - 9	7 - 11	11 - 0	14 - 10	19 - 0	4 - 5	7 - 6	10 - 4	13 - 10	17 - 9
	HF	No.1	4 - 7	7 - 7	10 - 4	13 - 7	16 - 9	4 - 4	6 - 11	9 - 4	12 - 2	14 - 11
	HF	No.2	4 - 4	7 - 0	9 - 5	12 - 4	15 - 2	4 - 0	6 - 4	8 - 6	11 - 1	13 - 6
	HF	No.3	3 - 2	5 - 0	6 - 9	8 - 8	10 - 6	2 - 11	4 - 7	6 - 1	7 - 10	9 - 6
	SP	SS	4 - 11	8 - 4	11 - 6	15 - 7	20 - 0	4 - 8	7 - 10	10 - 10	14 - 7	18 - 8
	SP	No.1	4 - 9	7 - 11	10 - 10	13 - 9	17 - 6	4 - 5	7 - 2	9 - 9	12 - 4	15 - 7
	SP	No.2	4 - 0	6 - 7	8 - 10	11 - 2	14 - 1	3 - 8	5 - 11	8 - 0	10 - 0	12 - 8
	SP	No.3	2 - 11	4 - 8	6 - 2	7 - 11	9 - 9	2 - 8	4 - 3	5 - 7	7 - 2	8 - 9
	SPF	SS	4 - 7	7 - 9	10 - 9	14 - 5	18 - 6	4 - 4	7 - 3	10 - 1	13 - 6	17 - 3
	SPF	No.1	4 - 5	7 - 1	9 - 8	12 - 7	15 - 6	4 - 1	6 - 5	8 - 8	11 - 3	13 - 10
	SPF	No.2	4 - 5	7 - 1	9 - 8	12 - 7	15 - 6	4 - 1	6 - 5	8 - 8	11 - 3	13 - 10
	SPF	No.3	3 - 2	5 - 0	6 - 9	8 - 8	10 - 6	2 - 11	4 - 7	6 - 1	7 - 10	9 - 6
24	DFL	SS	4 - 8	7 - 9	10 - 9	14 - 6	18 - 7	4 - 4	7 - 4	10 - 1	13 - 7	17 - 4
	DFL	No.1	4 - 3	6 - 9	9 - 1	11 - 10	14 - 6	3 - 10	6 - 1	8 - 2	10 - 8	13 - 0
	DFL	No.2	4 - 0	6 - 4	8 - 6	11 - 0	13 - 6	3 - 7	5 - 8	7 - 8	9 - 11	12 - 1
	DFL	No.3	2 - 11	4 - 6	6 - 1	7 - 9	9 - 5	2 - 7	4 - 1	5 - 6	7 - 0	8 - 6
	HF	SS	4 - 4	7 - 3	10 - 1	13 - 6	17 - 3	4 - 1	6 - 10	9 - 5	12 - 8	16 - 2
	HF	No.1	4 - 2	6 - 7	8 - 11	11 - 8	14 - 3	3 - 9	6 - 0	8 - 1	10 - 5	12 - 9
	HF	No.2	3 - 10	6 - 1	8 - 2	10 - 7	13 - 0	3 - 6	5 - 6	7 - 5	9 - 7	11 - 7
	HF	No.3	2 - 10	4 - 5	5 - 10	7 - 6	9 - 1	2 - 7	4 - 0	5 - 4	6 - 10	8 - 3
	SP	SS	4 - 6	7 - 7	10 - 7	14 - 2	18 - 2	4 - 3	7 - 2	9 - 11	13 - 3	16 - 11
	SP	No.1	4 - 3	6 - 11	9 - 4	11 - 10	14 - 11	3 - 10	6 - 3	8 - 5	10 - 8	13 - 4
	SP	No.2	3 - 6	5 - 9	7 - 8	9 - 8	12 - 1	3 - 2	5 - 2	6 - 11	8 - 8	10 - 10
	SP	No.3	2 - 7	4 - 1	5 - 5	6 - 11	8 - 5	2 - 4	3 - 9	4 - 11	6 - 3	7 - 7
	SPF	SS	4 - 3	7 - 1	9 - 10	13 - 2	16 - 9	4 - 0	6 - 8	9 - 3	12 - 4	15 - 2
	SPF	No.1	3 - 11	6 - 2	8 - 4	10 - 10	13 - 3	3 - 6	5 - 7	7 - 6	9 - 9	11 - 10
	SPF	No.2	3 - 11	6 - 2	8 - 4	10 - 10	13 - 3	3 - 6	5 - 7	7 - 6	9 - 9	11 - 10
	SPF	No.3	2 - 10	4 - 5	5 - 10	7 - 6	9 - 1	2 - 7	4 - 0	5 - 4	6 - 10	8 - 3

[1] See Table 3.26M footnotes.

† Spans are limited to 26 feet in length.

Copyright © American Wood Council. Downloaded/printed pursuant to License Agreement. No reproduction or transfer authorized.

Table 3.26M Rafter Deflection Limit = L/180

Exposure C

Maximum Rafter Spans for Common Lumber Species Resisting Uplift Loads due to Wind (12:12 Slope)

Wind Speed 3-second gust (mph) (See Figure 1.1)			90					95					100				
Rafter Spacing (in.)	Species	Grade	2x4	2x6	2x8	2x10	2x12	2x4	2x6	2x8	2x10	2x12	2x4	2x6	2x8	2x10	2x12
			Maximum Allowable Rafter Span (ft-in.)[1]														
12	DFL	SS	9 - 1	15 - 8	22 - 2	26-0†	26-0†	8 - 8	15 - 0	21 - 4	26-0†	26-0†	8 - 4	14 - 5	20 - 5	26-0†	26-0†
	DFL	No.1	8 - 8	15 - 0	21 - 4	26-0†	26-0†	8 - 4	14 - 4	20 - 5	26-0†	26-0†	8 - 0	13 - 9	19 - 6	25 - 4	26-0†
	DFL	No.2	8 - 6	14 - 7	20 - 10	26-0†	26-0†	8 - 2	14 - 0	19 - 10	25 - 9	26-0†	7 - 10	13 - 5	19 - 0	24 - 10	26-0†
	DFL	No.3	8 - 1	13 - 10	19 - 7	24 - 8	26-0†	7 - 9	12 - 11	18 - 1	23 - 4	26-0†	7 - 4	12 - 0	16 - 9	22 - 2	25 - 9
	HF	SS	8 - 6	14 - 7	20 - 10	26-0†	26-0†	8 - 2	14 - 0	19 - 10	25 - 9	26-0†	7 - 10	13 - 5	19 - 0	24 - 10	26-0†
	HF	No.1	8 - 3	14 - 3	20 - 3	26-0†	26-0†	7 - 11	13 - 7	19 - 4	25 - 2	26-0†	7 - 7	13 - 1	18 - 6	24 - 4	26-0†
	HF	No.2	7 - 10	13 - 5	19 - 0	24 - 11	26-0†	7 - 6	12 - 10	18 - 2	24 - 0	26-0†	7 - 3	12 - 4	17 - 4	23 - 2	26-0†
	HF	No.3	7 - 7	13 - 0	18 - 4	24 - 1	26-0†	7 - 3	12 - 5	17 - 5	22 - 9	26-0†	7 - 0	11 - 8	16 - 2	21 - 8	25 - 1
	SP	SS	8 - 11	15 - 4	21 - 9	26-0†	26-0†	8 - 6	14 - 8	20 - 11	26-0†	26-0†	8 - 2	14 - 1	20 - 0	25 - 10	26-0†
	SP	No.1	8 - 6	14 - 7	20 - 10	26-0†	26-0†	8 - 2	14 - 0	19 - 10	25 - 9	26-0†	7 - 10	13 - 5	19 - 0	24 - 10	26-0†
	SP	No.2	8 - 1	13 - 10	19 - 8	25 - 6	26-0†	7 - 9	13 - 3	18 - 9	24 - 7	26-0†	7 - 5	12 - 8	17 - 11	23 - 9	26-0†
	SP	No.3	7 - 5	12 - 4	17 - 1	22 - 4	26-0†	6 - 11	11 - 6	15 - 10	21 - 2	25 - 1	6 - 6	10 - 9	14 - 8	19 - 6	23 - 10
	SPF	SS	8 - 3	14 - 3	20 - 3	26-0†	26-0†	7 - 11	13 - 7	19 - 4	25 - 2	26-0†	7 - 7	13 - 1	18 - 6	24 - 4	26-0†
	SPF	No.1	8 - 1	13 - 10	19 - 8	25 - 6	26-0†	7 - 9	13 - 3	18 - 9	24 - 7	26-0†	7 - 5	12 - 8	17 - 11	23 - 9	26-0†
	SPF	No.2	8 - 1	13 - 10	19 - 8	25 - 6	26-0†	7 - 9	13 - 3	18 - 9	24 - 7	26-0†	7 - 5	12 - 8	17 - 11	23 - 9	26-0†
	SPF	No.3	7 - 7	13 - 0	18 - 4	24 - 1	26-0†	7 - 3	12 - 5	17 - 5	22 - 9	26-0†	7 - 0	11 - 8	16 - 2	21 - 8	25 - 1
16	DFL	SS	8 - 1	13 - 11	19 - 9	25 - 8	26-0†	7 - 9	13 - 4	18 - 10	24 - 9	26-0†	7 - 6	12 - 9	18 - 1	23 - 11	26-0†
	DFL	No.1	7 - 9	13 - 4	18 - 10	24 - 9	26-0†	7 - 5	12 - 9	18 - 0	23 - 10	26-0†	7 - 2	12 - 3	17 - 3	23 - 1	26-0†
	DFL	No.2	7 - 7	13 - 0	18 - 4	24 - 3	26-0†	7 - 3	12 - 5	17 - 6	23 - 5	26-0†	7 - 0	11 - 11	16 - 9	22 - 7	26-0†
	DFL	No.3	7 - 0	11 - 5	15 - 10	21 - 4	24 - 9	6 - 6	10 - 7	14 - 8	19 - 8	23 - 5	6 - 1	9 - 11	13 - 8	18 - 2	22 - 3
	HF	SS	7 - 7	13 - 0	18 - 4	24 - 3	26-0†	7 - 3	12 - 5	17 - 6	23 - 5	26-0†	7 - 0	11 - 11	16 - 9	22 - 7	26-0†
	HF	No.1	7 - 5	12 - 8	17 - 10	23 - 9	26-0†	7 - 1	12 - 1	17 - 1	22 - 11	26-0†	6 - 10	11 - 7	16 - 4	22 - 1	26-0†
	HF	No.2	7 - 0	11 - 11	16 - 10	22 - 7	26-0†	6 - 9	11 - 5	16 - 1	21 - 10	26-0†	6 - 5	11 - 0	15 - 5	21 - 0	25 - 8
	HF	No.3	6 - 9	11 - 1	15 - 3	20 - 7	24 - 2	6 - 4	10 - 3	14 - 2	18 - 11	22 - 11	5 - 11	9 - 7	13 - 2	17 - 7	21 - 9
	SP	SS	7 - 11	13 - 8	19 - 4	25 - 2	26-0†	7 - 7	13 - 1	18 - 5	24 - 4	26-0†	7 - 4	12 - 6	17 - 8	23 - 6	26-0†
	SP	No.1	7 - 7	13 - 0	18 - 4	24 - 3	26-0†	7 - 3	12 - 5	17 - 6	23 - 5	26-0†	7 - 0	11 - 11	16 - 9	22 - 7	26-0†
	SP	No.2	7 - 2	12 - 4	17 - 4	23 - 2	26-0†	6 - 11	11 - 9	16 - 7	22 - 4	26-0†	6 - 8	11 - 4	15 - 10	21 - 7	26-0†
	SP	No.3	6 - 2	10 - 2	13 - 11	18 - 5	22 - 11	5 - 9	9 - 6	12 - 11	17 - 0	21 - 8	5 - 5	8 - 10	12 - 0	15 - 9	20 - 3
	SPF	SS	7 - 5	12 - 8	17 - 10	23 - 9	26-0†	7 - 1	12 - 1	17 - 1	22 - 11	26-0†	6 - 10	11 - 7	16 - 4	22 - 1	26-0†
	SPF	No.1	7 - 2	12 - 4	17 - 4	23 - 2	26-0†	6 - 11	11 - 9	16 - 7	22 - 4	26-0†	6 - 8	11 - 4	15 - 10	21 - 7	26-0†
	SPF	No.2	7 - 2	12 - 4	17 - 4	23 - 2	26-0†	6 - 11	11 - 9	16 - 7	22 - 4	26-0†	6 - 8	11 - 4	15 - 10	21 - 7	26-0†
	SPF	No.3	6 - 9	11 - 1	15 - 3	20 - 7	24 - 2	6 - 4	10 - 3	14 - 2	18 - 11	22 - 11	5 - 11	9 - 7	13 - 2	17 - 7	21 - 9
19.2	DFL	SS	7 - 7	12 - 11	18 - 3	24 - 2	26-0†	7 - 3	12 - 5	17 - 5	23 - 4	26-0†	7 - 0	11 - 11	16 - 9	22 - 6	26-0†
	DFL	No.1	7 - 3	12 - 4	17 - 5	23 - 3	26-0†	6 - 11	11 - 10	16 - 8	22 - 5	26-0†	6 - 8	11 - 4	15 - 11	21 - 8	26-0†
	DFL	No.2	7 - 1	12 - 1	17 - 0	22 - 10	26-0†	6 - 9	11 - 7	16 - 3	22 - 0	26-0†	6 - 6	11 - 1	15 - 7	21 - 3	25 - 10
	DFL	No.3	6 - 3	10 - 1	13 - 11	18 - 7	22 - 7	5 - 10	9 - 5	12 - 11	17 - 2	21 - 5	5 - 6	8 - 10	12 - 0	15 - 11	19 - 10
	HF	SS	7 - 1	12 - 1	17 - 0	22 - 10	26-0†	6 - 9	11 - 7	16 - 3	22 - 0	26-0†	6 - 6	11 - 1	15 - 7	21 - 3	25 - 10
	HF	No.1	6 - 11	11 - 9	16 - 6	22 - 4	26-0†	6 - 7	11 - 3	15 - 10	21 - 6	26-0†	6 - 4	10 - 10	15 - 2	20 - 8	25 - 4
	HF	No.2	6 - 6	11 - 1	15 - 7	21 - 3	25 - 11	6 - 3	10 - 8	14 - 11	20 - 4	25 - 0	6 - 0	10 - 2	14 - 3	19 - 5	24 - 2
	HF	No.3	6 - 0	9 - 9	13 - 5	17 - 11	22 - 1	5 - 8	9 - 1	12 - 6	16 - 7	20 - 8	5 - 4	8 - 6	11 - 8	15 - 4	19 - 1
	SP	SS	7 - 5	12 - 8	17 - 10	23 - 9	26-0†	7 - 1	12 - 1	17 - 1	22 - 11	26-0†	6 - 10	11 - 7	16 - 4	22 - 1	26-0†
	SP	No.1	7 - 1	12 - 1	17 - 0	22 - 10	26-0†	6 - 9	11 - 7	16 - 3	22 - 0	26-0†	6 - 6	11 - 1	15 - 7	21 - 3	25 - 10
	SP	No.2	6 - 9	11 - 5	16 - 1	21 - 10	26-0†	6 - 5	10 - 11	15 - 4	21 - 0	25 - 7	6 - 2	10 - 6	14 - 8	20 - 1	24 - 4
	SP	No.3	5 - 6	9 - 0	12 - 3	16 - 1	20 - 9	5 - 2	8 - 5	11 - 5	14 - 11	19 - 1	4 - 10	7 - 11	10 - 8	13 - 10	17 - 8
	SPF	SS	6 - 11	11 - 9	16 - 6	22 - 4	26-0†	6 - 7	11 - 3	15 - 10	21 - 6	26-0†	6 - 4	10 - 10	15 - 2	20 - 8	25 - 4
	SPF	No.1	6 - 9	11 - 5	16 - 1	21 - 10	26-0†	6 - 5	10 - 11	15 - 4	21 - 0	25 - 7	6 - 2	10 - 6	14 - 8	20 - 1	24 - 9
	SPF	No.2	6 - 9	11 - 5	16 - 1	21 - 10	26-0†	6 - 5	10 - 11	15 - 4	21 - 0	25 - 7	6 - 2	10 - 6	14 - 8	20 - 1	24 - 9
	SPF	No.3	6 - 0	9 - 9	13 - 5	17 - 11	22 - 1	5 - 8	9 - 1	12 - 6	16 - 7	20 - 8	5 - 4	8 - 6	11 - 8	15 - 4	19 - 1
24	DFL	SS	6 - 11	11 - 10	16 - 7	22 - 5	26-0†	6 - 8	11 - 4	15 - 11	21 - 8	26-0†	6 - 5	10 - 10	15 - 3	20 - 10	25 - 5
	DFL	No.1	6 - 8	11 - 4	15 - 10	21 - 7	26-0†	6 - 4	10 - 10	15 - 2	20 - 9	25 - 4	6 - 2	10 - 5	14 - 6	19 - 10	24 - 6
	DFL	No.2	6 - 6	11 - 0	15 - 6	21 - 2	25 - 9	6 - 3	10 - 7	14 - 9	20 - 2	24 - 10	6 - 0	10 - 2	14 - 2	19 - 4	23 - 10
	DFL	No.3	5 - 5	8 - 9	11 - 11	15 - 9	19 - 8	5 - 1	8 - 2	11 - 1	14 - 7	18 - 1	4 - 9	7 - 8	10 - 4	13 - 7	16 - 9
	HF	SS	6 - 6	11 - 0	15 - 6	21 - 2	25 - 9	6 - 3	10 - 7	14 - 9	20 - 2	24 - 10	6 - 0	10 - 2	14 - 2	19 - 4	24 - 0
	HF	No.1	6 - 4	10 - 9	15 - 1	20 - 7	25 - 2	6 - 1	10 - 4	14 - 5	19 - 7	24 - 4	5 - 10	9 - 11	13 - 10	18 - 9	23 - 6
	HF	No.2	6 - 0	10 - 2	14 - 2	19 - 4	24 - 0	5 - 9	9 - 9	13 - 7	18 - 5	23 - 2	5 - 6	9 - 4	13 - 0	17 - 8	22 - 5
	HF	No.3	5 - 3	8 - 6	11 - 7	15 - 3	18 - 11	4 - 11	7 - 11	10 - 9	14 - 1	17 - 5	4 - 8	7 - 5	10 - 0	13 - 2	16 - 2
	SP	SS	6 - 9	11 - 7	16 - 3	22 - 0	26-0†	6 - 6	11 - 1	15 - 6	21 - 3	25 - 10	6 - 3	10 - 8	14 - 11	20 - 4	25 - 0
	SP	No.1	6 - 6	11 - 0	15 - 6	21 - 2	25 - 9	6 - 3	10 - 7	14 - 9	20 - 2	24 - 10	6 - 0	10 - 2	14 - 2	19 - 4	24 - 0
	SP	No.2	6 - 2	10 - 5	14 - 8	20 - 0	24 - 2	5 - 11	10 - 0	14 - 0	18 - 6	22 - 11	5 - 8	9 - 7	13 - 5	17 - 2	21 - 9
	SP	No.3	4 - 10	7 - 10	10 - 7	13 - 9	17 - 6	4 - 6	7 - 4	9 - 10	12 - 9	16 - 2	4 - 3	6 - 10	9 - 2	11 - 11	15 - 0
	SPF	SS	6 - 4	10 - 9	15 - 1	20 - 7	25 - 2	6 - 1	10 - 4	14 - 5	19 - 7	24 - 4	5 - 10	9 - 11	13 - 10	18 - 9	23 - 6
	SPF	No.1	6 - 2	10 - 5	14 - 8	20 - 0	24 - 8	5 - 11	10 - 0	14 - 0	19 - 0	23 - 9	5 - 8	9 - 7	13 - 5	18 - 3	23 - 0
	SPF	No.2	6 - 2	10 - 5	14 - 8	20 - 0	24 - 8	5 - 11	10 - 0	14 - 0	19 - 0	23 - 9	5 - 8	9 - 7	13 - 5	18 - 3	23 - 0
	SPF	No.3	5 - 3	8 - 6	11 - 7	15 - 3	18 - 11	4 - 11	7 - 11	10 - 9	14 - 1	17 - 5	4 - 8	7 - 5	10 - 0	13 - 2	16 - 2

[1] See Table 3.26M footnotes.

† Spans are limited to 26 feet in length.

Copyright © American Wood Council. Downloaded/printed pursuant to License Agreement. No reproduction or transfer authorized.

Table 3.26M (Cont.) **Rafter Deflection Limit = L/180**

Exposure C

Maximum Rafter Spans for Common Lumber Species Resisting Uplift Loads due to Wind (12:12 Slope)

Wind Speed 3-second gust (mph) (See Figure 1.1)			105					110					115				
Rafter Spacing (in.)	Species	Grade	2x4	2x6	2x8	2x10	2x12	2x4	2x6	2x8	2x10	2x12	2x4	2x6	2x8	2x10	2x12
			Maximum Allowable Rafter Span (ft-in.)[1]														
12	DFL	SS	8 - 1	13 - 10	19 - 7	25 - 6	26-0†	7 - 9	13 - 4	18 - 10	24 - 9	26-0†	7 - 6	12 - 10	18 - 1	24 - 0	26-0†
	DFL	No.1	7 - 8	13 - 2	18 - 8	24 - 7	26-0†	7 - 5	12 - 9	17 - 11	23 - 10	26-0†	7 - 2	12 - 3	17 - 3	23 - 1	26-0†
	DFL	No.2	7 - 6	12 - 11	18 - 2	24 - 1	26-0†	7 - 3	12 - 5	17 - 6	23 - 4	26-0†	7 - 0	12 - 0	16 - 10	22 - 8	26-0†
	DFL	No.3	6 - 11	11 - 3	15 - 7	21 - 1	24 - 6	6 - 6	10 - 7	14 - 7	19 - 7	23 - 5	6 - 2	10 - 0	13 - 9	18 - 4	22 - 4
	HF	SS	7 - 6	12 - 11	18 - 2	24 - 1	26-0†	7 - 3	12 - 5	17 - 6	23 - 4	26-0†	7 - 0	12 - 0	16 - 10	22 - 8	26-0†
	HF	No.1	7 - 4	12 - 7	17 - 8	23 - 7	26-0†	7 - 1	12 - 1	17 - 0	22 - 10	26-0†	6 - 10	11 - 8	16 - 5	22 - 2	26-0†
	HF	No.2	6 - 11	11 - 10	16 - 8	22 - 6	26-0†	6 - 8	11 - 5	16 - 0	21 - 9	26-0†	6 - 6	11 - 0	15 - 5	21 - 1	25 - 9
	HF	No.3	6 - 8	10 - 11	15 - 1	20 - 3	23 - 11	6 - 4	10 - 3	14 - 1	18 - 10	22 - 10	6 - 0	9 - 8	13 - 3	17 - 8	21 - 10
	SP	SS	7 - 11	13 - 6	19 - 2	25 - 0	26-0†	7 - 7	13 - 0	18 - 5	24 - 3	26-0†	7 - 4	12 - 7	17 - 8	23 - 7	26-0†
	SP	No.1	7 - 6	12 - 11	18 - 2	24 - 1	26-0†	7 - 3	12 - 5	17 - 6	23 - 4	26-0†	7 - 0	12 - 0	16 - 10	22 - 8	26-0†
	SP	No.2	7 - 2	12 - 2	17 - 2	23 - 0	26-0†	6 - 11	11 - 9	16 - 6	22 - 4	26-0†	6 - 8	11 - 4	15 - 11	21 - 8	26-0†
	SP	No.3	6 - 1	10 - 1	13 - 9	18 - 1	22 - 8	5 - 9	9 - 5	12 - 10	16 - 11	21 - 8	5 - 6	8 - 11	12 - 1	15 - 10	20 - 5
	SPF	SS	7 - 4	12 - 7	17 - 8	23 - 7	26-0†	7 - 1	12 - 1	17 - 0	22 - 10	26-0†	6 - 10	11 - 8	16 - 5	22 - 2	26-0†
	SPF	No.1	7 - 2	12 - 2	17 - 2	23 - 0	26-0†	6 - 11	11 - 9	16 - 6	22 - 4	26-0†	6 - 8	11 - 4	15 - 11	21 - 8	26-0†
	SPF	No.2	7 - 2	12 - 2	17 - 2	23 - 0	26-0†	6 - 11	11 - 9	16 - 6	22 - 4	26-0†	6 - 8	11 - 4	15 - 11	21 - 8	26-0†
	SPF	No.3	6 - 8	10 - 11	15 - 1	20 - 3	23 - 11	6 - 4	10 - 3	14 - 1	18 - 10	22 - 10	6 - 0	9 - 8	13 - 3	17 - 8	21 - 10
16	DFL	SS	7 - 2	12 - 3	17 - 4	23 - 2	26-0†	6 - 11	11 - 10	16 - 8	22 - 5	26-0†	6 - 9	11 - 5	16 - 0	21 - 10	26-0†
	DFL	No.1	6 - 11	11 - 9	16 - 6	22 - 4	26-0†	6 - 8	11 - 4	15 - 11	21 - 8	26-0†	6 - 5	10 - 11	15 - 4	20 - 11	25 - 7
	DFL	No.2	6 - 9	11 - 6	16 - 1	21 - 10	26-0†	6 - 6	11 - 1	15 - 6	21 - 2	25 - 9	6 - 3	10 - 8	14 - 11	20 - 5	25 - 0
	DFL	No.3	5 - 9	9 - 4	12 - 9	16 - 11	21 - 2	5 - 5	8 - 9	12 - 0	15 - 10	19 - 9	5 - 2	8 - 3	11 - 3	14 - 10	18 - 5
	HF	SS	6 - 9	11 - 6	16 - 1	21 - 10	26-0†	6 - 6	11 - 1	15 - 6	21 - 2	25 - 9	6 - 3	10 - 8	14 - 11	20 - 5	25 - 0
	HF	No.1	6 - 7	11 - 2	15 - 8	21 - 5	26-0†	6 - 4	10 - 9	15 - 1	20 - 7	25 - 3	6 - 2	10 - 5	14 - 6	19 - 10	24 - 6
	HF	No.2	6 - 3	10 - 7	14 - 9	20 - 2	24 - 10	6 - 0	10 - 2	14 - 3	19 - 4	24 - 1	5 - 10	9 - 10	13 - 8	18 - 7	23 - 4
	HF	No.3	5 - 7	9 - 0	12 - 4	16 - 4	20 - 5	5 - 3	8 - 6	11 - 7	15 - 3	19 - 0	5 - 0	8 - 0	10 - 11	14 - 4	17 - 9
	SP	SS	7 - 1	12 - 0	16 - 11	22 - 9	26-0†	6 - 10	11 - 7	16 - 3	22 - 1	26-0†	6 - 7	11 - 2	15 - 8	21 - 5	26-0†
	SP	No.1	6 - 9	11 - 6	16 - 1	21 - 10	26-0†	6 - 6	11 - 1	15 - 6	21 - 2	25 - 9	6 - 3	10 - 8	14 - 11	20 - 5	25 - 0
	SP	No.2	6 - 5	10 - 10	15 - 3	20 - 10	25 - 4	6 - 2	10 - 6	14 - 8	20 - 0	24 - 2	6 - 0	10 - 1	14 - 2	18 - 10	23 - 2
	SP	No.3	5 - 1	8 - 4	11 - 3	14 - 8	18 - 10	4 - 10	7 - 10	10 - 7	13 - 9	17 - 7	4 - 7	7 - 5	10 - 0	13 - 0	16 - 5
	SPF	SS	6 - 7	11 - 2	15 - 8	21 - 5	26-0†	6 - 4	10 - 9	15 - 1	20 - 7	25 - 3	6 - 2	10 - 5	14 - 6	19 - 10	24 - 6
	SPF	No.1	6 - 5	10 - 10	15 - 3	20 - 10	25 - 5	6 - 2	10 - 6	14 - 8	20 - 0	24 - 8	6 - 0	10 - 1	14 - 2	19 - 3	23 - 11
	SPF	No.2	6 - 5	10 - 10	15 - 3	20 - 10	25 - 5	6 - 2	10 - 6	14 - 8	20 - 0	24 - 8	6 - 0	10 - 1	14 - 2	19 - 3	23 - 11
	SPF	No.3	5 - 7	9 - 0	12 - 4	16 - 4	20 - 5	5 - 3	8 - 6	11 - 7	15 - 3	19 - 0	5 - 0	8 - 0	10 - 11	14 - 4	17 - 9
19.2	DFL	SS	6 - 9	11 - 5	16 - 0	21 - 10	26-0†	6 - 6	11 - 0	15 - 5	21 - 1	25 - 8	6 - 3	10 - 7	14 - 10	20 - 3	24 - 11
	DFL	No.1	6 - 5	10 - 11	15 - 4	20 - 11	25 - 6	6 - 2	10 - 6	14 - 9	20 - 1	24 - 9	6 - 0	10 - 2	14 - 2	19 - 4	24 - 0
	DFL	No.2	6 - 3	10 - 8	14 - 11	20 - 5	25 - 0	6 - 1	10 - 3	14 - 4	19 - 7	24 - 2	5 - 10	9 - 11	13 - 10	18 - 10	23 - 2
	DFL	No.3	5 - 2	8 - 3	11 - 3	14 - 10	18 - 5	4 - 10	7 - 10	10 - 7	13 - 11	17 - 2	4 - 7	7 - 4	10 - 0	13 - 1	16 - 1
	HF	SS	6 - 3	10 - 8	14 - 11	20 - 5	25 - 0	6 - 1	10 - 3	14 - 4	19 - 7	24 - 3	5 - 10	9 - 11	13 - 10	18 - 10	23 - 7
	HF	No.1	6 - 2	10 - 5	14 - 6	19 - 10	24 - 6	5 - 11	10 - 0	14 - 0	19 - 0	23 - 9	5 - 9	9 - 8	13 - 6	18 - 4	23 - 1
	HF	No.2	5 - 10	9 - 10	13 - 8	18 - 7	23 - 4	5 - 7	9 - 6	13 - 2	17 - 11	22 - 8	5 - 5	9 - 2	12 - 9	17 - 3	22 - 0
	HF	No.3	5 - 0	8 - 0	10 - 11	14 - 4	17 - 9	4 - 9	7 - 7	10 - 3	13 - 5	16 - 7	4 - 6	7 - 2	9 - 8	12 - 8	15 - 7
	SP	SS	6 - 7	11 - 2	15 - 8	21 - 5	26-0†	6 - 4	10 - 9	15 - 1	20 - 7	25 - 3	6 - 2	10 - 5	14 - 6	19 - 10	24 - 6
	SP	No.1	6 - 3	10 - 8	14 - 11	20 - 5	25 - 0	6 - 1	10 - 3	14 - 4	19 - 7	24 - 3	5 - 10	9 - 11	13 - 10	18 - 10	23 - 7
	SP	No.2	6 - 0	10 - 1	14 - 2	18 - 10	23 - 2	5 - 9	9 - 9	13 - 7	17 - 7	22 - 1	5 - 7	9 - 5	12 - 11	16 - 5	21 - 1
	SP	No.3	4 - 7	7 - 5	10 - 0	12 - 11	16 - 5	4 - 4	7 - 0	9 - 5	12 - 2	15 - 4	4 - 1	6 - 7	8 - 10	11 - 5	14 - 5
	SPF	SS	6 - 2	10 - 5	14 - 6	19 - 10	24 - 6	5 - 11	10 - 0	14 - 0	19 - 0	23 - 9	5 - 9	9 - 8	13 - 6	18 - 4	23 - 1
	SPF	No.1	6 - 0	10 - 1	14 - 2	19 - 3	23 - 11	5 - 9	9 - 9	13 - 7	18 - 6	23 - 3	5 - 7	9 - 5	13 - 1	17 - 9	22 - 6
	SPF	No.2	6 - 0	10 - 1	14 - 2	19 - 3	23 - 11	5 - 9	9 - 9	13 - 7	18 - 6	23 - 3	5 - 7	9 - 5	13 - 1	17 - 9	22 - 6
	SPF	No.3	5 - 0	8 - 0	10 - 11	14 - 4	17 - 9	4 - 9	7 - 7	10 - 3	13 - 5	16 - 7	4 - 6	7 - 2	9 - 8	12 - 8	15 - 7
24	DFL	SS	6 - 2	10 - 5	14 - 7	19 - 11	24 - 7	5 - 11	10 - 1	14 - 1	19 - 2	23 - 10	5 - 9	9 - 9	13 - 7	18 - 5	23 - 2
	DFL	No.1	5 - 11	10 - 0	14 - 0	19 - 0	23 - 9	5 - 8	9 - 8	13 - 5	18 - 3	22 - 10	5 - 6	9 - 4	13 - 0	17 - 7	21 - 10
	DFL	No.2	5 - 9	9 - 9	13 - 7	18 - 6	22 - 8	5 - 7	9 - 5	13 - 1	17 - 5	21 - 8	5 - 5	9 - 0	12 - 4	16 - 4	20 - 5
	DFL	No.3	4 - 6	7 - 2	9 - 9	12 - 8	15 - 8	4 - 3	6 - 9	9 - 2	11 - 11	14 - 8	4 - 0	6 - 5	8 - 8	11 - 3	13 - 9
	HF	SS	5 - 9	9 - 9	13 - 7	18 - 6	23 - 3	5 - 7	9 - 5	13 - 1	17 - 9	22 - 6	5 - 5	9 - 1	12 - 8	17 - 1	21 - 10
	HF	No.1	5 - 8	9 - 6	13 - 3	18 - 0	22 - 9	5 - 5	9 - 2	12 - 9	17 - 3	22 - 1	5 - 3	8 - 10	12 - 4	16 - 8	21 - 5
	HF	No.2	5 - 4	9 - 0	12 - 6	16 - 11	21 - 8	5 - 2	8 - 8	12 - 1	16 - 3	20 - 11	5 - 0	8 - 4	11 - 7	15 - 8	19 - 6
	HF	No.3	4 - 4	7 - 0	9 - 5	12 - 3	15 - 1	4 - 2	6 - 7	8 - 10	11 - 6	14 - 2	3 - 11	6 - 3	8 - 5	10 - 10	13 - 3
	SP	SS	6 - 0	10 - 3	14 - 4	19 - 6	24 - 2	5 - 10	9 - 10	13 - 9	18 - 8	23 - 5	5 - 8	9 - 6	13 - 3	18 - 0	22 - 9
	SP	No.1	5 - 9	9 - 9	13 - 7	18 - 6	23 - 3	5 - 7	9 - 5	13 - 1	17 - 9	22 - 6	5 - 5	9 - 1	12 - 8	17 - 1	21 - 10
	SP	No.2	5 - 6	9 - 2	12 - 7	16 - 0	20 - 5	5 - 2	8 - 8	11 - 10	14 - 11	19 - 0	4 - 11	8 - 2	11 - 1	14 - 0	17 - 9
	SP	No.3	4 - 0	6 - 5	8 - 8	11 - 2	14 - 0	3 - 9	6 - 1	8 - 2	10 - 6	13 - 2	3 - 7	5 - 9	7 - 8	9 - 10	12 - 4
	SPF	SS	5 - 8	9 - 6	13 - 3	18 - 0	22 - 9	5 - 5	9 - 2	12 - 9	17 - 3	22 - 1	5 - 3	8 - 10	12 - 4	16 - 8	21 - 5
	SPF	No.1	5 - 6	9 - 3	12 - 11	17 - 6	22 - 3	5 - 3	8 - 11	12 - 5	16 - 10	21 - 4	5 - 1	8 - 7	12 - 0	16 - 0	20 - 0
	SPF	No.2	5 - 6	9 - 3	12 - 11	17 - 6	22 - 3	5 - 3	8 - 11	12 - 5	16 - 10	21 - 4	5 - 1	8 - 7	12 - 0	16 - 0	20 - 0
	SPF	No.3	4 - 4	7 - 0	9 - 5	12 - 3	15 - 1	4 - 2	6 - 7	8 - 10	11 - 6	14 - 2	3 - 11	6 - 3	8 - 5	10 - 10	13 - 3

[1] See Table 3.26M footnotes.

† Spans are limited to 26 feet in length.

Copyright © American Wood Council. Downloaded/printed pursuant to License Agreement. No reproduction or transfer authorized.

Table 3.26M (Cont.) **Rafter Deflection Limit = L/180**

Maximum Rafter Spans for Common Lumber Species Resisting Uplift Loads due to Wind (12:12 Slope)

Exposure C

Wind Speed 3-sec. Gust (mph) (See Figure 1.1)			120					130					140				
Rafter Spacing (in.)	Species	Grade	2x4	2x6	2x8	2x10	2x12	2x4	2x6	2x8	2x10	2x12	2x4	2x6	2x8	2x10	2x12
			Maximum Allowable Rafter Span (ft-in.)[1]														
12	DFL	SS	7 - 3	12 - 5	17 - 6	23 - 4	26-0†	6 - 10	11 - 7	16 - 4	22 - 1	26-0†	6 - 5	10 - 11	15 - 4	21 - 0	25 - 7
	DFL	No.1	7 - 0	11 - 10	16 - 8	22 - 6	26-0†	6 - 6	11 - 1	15 - 7	21 - 4	25 - 11	6 - 2	10 - 6	14 - 8	20 - 0	24 - 8
	DFL	No.2	6 - 9	11 - 7	16 - 3	22 - 0	26-0†	6 - 5	10 - 10	15 - 2	20 - 9	25 - 5	6 - 0	10 - 3	14 - 3	19 - 6	24 - 1
	DFL	No.3	5 - 10	9 - 5	12 - 11	17 - 2	21 - 5	5 - 3	8 - 6	11 - 7	15 - 4	19 - 0	4 - 10	7 - 9	10 - 6	13 - 9	17 - 0
	HF	SS	6 - 9	11 - 7	16 - 3	22 - 0	26-0†	6 - 5	10 - 10	15 - 2	20 - 9	25 - 5	6 - 0	10 - 3	14 - 4	19 - 6	24 - 2
	HF	No.1	6 - 7	11 - 3	15 - 10	21 - 7	26-0†	6 - 3	10 - 7	14 - 10	20 - 2	24 - 10	5 - 11	10 - 0	13 - 11	18 - 11	23 - 8
	HF	No.2	6 - 3	10 - 8	14 - 11	20 - 4	25 - 0	5 - 11	10 - 0	13 - 11	19 - 0	23 - 8	5 - 7	9 - 5	13 - 1	17 - 10	22 - 7
	HF	No.3	5 - 8	9 - 2	12 - 6	16 - 7	20 - 9	5 - 2	8 - 3	11 - 3	14 - 9	18 - 4	4 - 8	7 - 6	10 - 2	13 - 4	16 - 5
	SP	SS	7 - 1	12 - 2	17 - 1	22 - 11	26-0†	6 - 8	11 - 4	16 - 0	21 - 9	26-0†	6 - 4	10 - 9	15 - 0	20 - 6	25 - 2
	SP	No.1	6 - 9	11 - 7	16 - 3	22 - 0	26-0†	6 - 5	10 - 10	15 - 2	20 - 9	25 - 5	6 - 0	10 - 3	14 - 4	19 - 6	24 - 2
	SP	No.2	6 - 5	11 - 0	15 - 4	21 - 0	25 - 7	6 - 1	10 - 3	14 - 5	19 - 6	23 - 8	5 - 9	9 - 8	13 - 6	17 - 5	22 - 0
	SP	No.3	5 - 2	8 - 5	11 - 5	14 - 11	19 - 1	4 - 8	7 - 8	10 - 3	13 - 4	17 - 0	4 - 4	6 - 11	9 - 4	12 - 1	15 - 3
	SPF	SS	6 - 7	11 - 3	15 - 10	21 - 7	26-0†	6 - 3	10 - 7	14 - 10	20 - 2	24 - 10	5 - 11	10 - 0	13 - 11	18 - 11	23 - 8
	SPF	No.1	6 - 5	11 - 0	15 - 4	21 - 0	25 - 7	6 - 1	10 - 3	14 - 5	19 - 7	24 - 3	5 - 9	9 - 8	13 - 6	18 - 4	23 - 1
	SPF	No.2	6 - 5	11 - 0	15 - 4	21 - 0	25 - 7	6 - 1	10 - 3	14 - 5	19 - 7	24 - 3	5 - 9	9 - 8	13 - 6	18 - 4	23 - 1
	SPF	No.3	5 - 8	9 - 2	12 - 6	16 - 7	20 - 9	5 - 2	8 - 3	11 - 3	14 - 9	18 - 4	4 - 8	7 - 6	10 - 2	13 - 4	16 - 5
16	DFL	SS	6 - 6	11 - 0	15 - 6	21 - 2	25 - 9	6 - 1	10 - 4	14 - 6	19 - 9	24 - 5	5 - 9	9 - 9	13 - 8	18 - 6	23 - 3
	DFL	No.1	6 - 3	10 - 7	14 - 9	20 - 2	24 - 10	5 - 10	9 - 11	13 - 10	18 - 10	23 - 6	5 - 6	9 - 4	13 - 0	17 - 8	22 - 0
	DFL	No.2	6 - 1	10 - 4	14 - 5	19 - 8	24 - 4	5 - 9	9 - 8	13 - 6	18 - 4	22 - 5	5 - 5	9 - 1	12 - 5	16 - 6	20 - 7
	DFL	No.3	4 - 11	7 - 10	10 - 8	14 - 0	17 - 3	4 - 5	7 - 1	9 - 7	12 - 6	15 - 5	4 - 1	6 - 5	8 - 9	11 - 4	13 - 10
	HF	SS	6 - 1	10 - 4	14 - 5	19 - 8	24 - 4	5 - 9	9 - 8	13 - 6	18 - 4	23 - 1	5 - 5	9 - 1	12 - 8	17 - 2	22 - 0
	HF	No.1	5 - 11	10 - 1	14 - 0	19 - 1	23 - 10	5 - 7	9 - 5	13 - 2	17 - 10	22 - 7	5 - 3	8 - 11	12 - 5	16 - 9	21 - 6
	HF	No.2	5 - 7	9 - 6	13 - 3	18 - 0	22 - 8	5 - 3	8 - 11	12 - 5	16 - 9	21 - 6	5 - 0	8 - 5	11 - 8	15 - 9	19 - 8
	HF	No.3	4 - 9	7 - 7	10 - 4	13 - 6	16 - 8	4 - 4	6 - 10	9 - 3	12 - 1	14 - 10	3 - 11	6 - 3	8 - 5	11 - 0	13 - 5
	SP	SS	6 - 4	10 - 10	15 - 2	20 - 8	25 - 4	6 - 0	10 - 2	14 - 2	19 - 3	24 - 0	5 - 8	9 - 7	13 - 4	18 - 1	22 - 10
	SP	No.1	6 - 1	10 - 4	14 - 5	19 - 8	24 - 4	5 - 9	9 - 8	13 - 6	18 - 4	23 - 1	5 - 5	9 - 1	12 - 8	17 - 2	22 - 0
	SP	No.2	5 - 9	9 - 9	13 - 8	17 - 8	22 - 2	5 - 5	9 - 0	12 - 5	15 - 9	20 - 1	5 - 0	8 - 3	11 - 2	14 - 2	17 - 11
	SP	No.3	4 - 4	7 - 0	9 - 5	12 - 3	15 - 5	4 - 0	6 - 4	8 - 6	11 - 0	13 - 10	3 - 7	5 - 10	7 - 9	9 - 11	12 - 6
	SPF	SS	5 - 11	10 - 1	14 - 0	19 - 1	23 - 10	5 - 7	9 - 5	13 - 2	17 - 10	22 - 7	5 - 3	8 - 11	12 - 5	16 - 9	21 - 6
	SPF	No.1	5 - 9	9 - 9	13 - 8	18 - 6	23 - 3	5 - 5	9 - 2	12 - 9	17 - 4	22 - 1	5 - 2	8 - 8	12 - 0	16 - 2	20 - 2
	SPF	No.2	5 - 9	9 - 9	13 - 8	18 - 6	23 - 3	5 - 5	9 - 2	12 - 9	17 - 4	22 - 1	5 - 2	8 - 8	12 - 0	16 - 2	20 - 2
	SPF	No.3	4 - 9	7 - 7	10 - 4	13 - 6	16 - 8	4 - 4	6 - 10	9 - 3	12 - 1	14 - 10	3 - 11	6 - 3	8 - 5	11 - 0	13 - 5
19.2	DFL	SS	6 - 1	10 - 3	14 - 4	19 - 7	24 - 3	5 - 8	9 - 8	13 - 5	18 - 3	23 - 0	5 - 5	9 - 1	12 - 8	17 - 1	21 - 11
	DFL	No.1	5 - 10	9 - 10	13 - 9	18 - 8	23 - 4	5 - 6	9 - 3	12 - 10	17 - 4	21 - 7	5 - 2	8 - 8	11 - 10	15 - 7	19 - 5
	DFL	No.2	5 - 8	9 - 7	13 - 4	18 - 1	22 - 2	5 - 4	8 - 11	12 - 2	16 - 1	20 - 1	5 - 0	8 - 1	11 - 0	14 - 6	17 - 11
	DFL	No.3	4 - 5	7 - 0	9 - 5	12 - 4	15 - 2	4 - 0	6 - 4	8 - 6	11 - 1	13 - 6	3 - 8	5 - 9	7 - 9	10 - 0	12 - 3
	HF	SS	5 - 8	9 - 7	13 - 4	18 - 2	22 - 11	5 - 4	9 - 0	12 - 6	17 - 0	21 - 8	5 - 1	8 - 6	11 - 10	15 - 11	20 - 6
	HF	No.1	5 - 6	9 - 4	13 - 0	17 - 8	22 - 5	5 - 2	8 - 9	12 - 2	16 - 6	21 - 3	4 - 11	8 - 3	11 - 6	15 - 4	19 - 0
	HF	No.2	5 - 3	8 - 10	12 - 3	16 - 7	21 - 4	4 - 11	8 - 4	11 - 6	15 - 5	19 - 2	4 - 8	7 - 10	10 - 7	13 - 11	17 - 2
	HF	No.3	4 - 3	6 - 9	9 - 2	11 - 11	14 - 8	3 - 10	6 - 2	8 - 3	10 - 9	13 - 1	3 - 6	5 - 7	7 - 6	9 - 9	11 - 10
	SP	SS	5 - 11	10 - 1	14 - 0	19 - 1	23 - 10	5 - 7	9 - 5	13 - 2	17 - 10	22 - 7	5 - 3	8 - 11	12 - 5	16 - 9	21 - 6
	SP	No.1	5 - 8	9 - 7	13 - 4	18 - 2	22 - 11	5 - 4	9 - 0	12 - 6	16 - 9	21 - 7	5 - 1	8 - 6	11 - 10	15 - 1	19 - 5
	SP	No.2	5 - 4	8 - 11	12 - 2	15 - 6	19 - 9	4 - 10	8 - 0	11 - 0	13 - 10	17 - 6	4 - 5	7 - 4	9 - 11	12 - 6	15 - 8
	SP	No.3	3 - 11	6 - 3	8 - 5	10 - 10	13 - 7	3 - 7	5 - 8	7 - 7	9 - 9	12 - 2	3 - 3	5 - 2	6 - 11	8 - 10	11 - 0
	SPF	SS	5 - 6	9 - 4	13 - 0	17 - 8	22 - 5	5 - 2	8 - 9	12 - 2	16 - 6	21 - 3	4 - 11	8 - 3	11 - 6	15 - 6	19 - 11
	SPF	No.1	5 - 5	9 - 1	12 - 8	17 - 2	21 - 10	5 - 1	8 - 7	11 - 10	15 - 9	19 - 8	4 - 10	7 - 11	10 - 10	14 - 2	17 - 7
	SPF	No.2	5 - 5	9 - 1	12 - 8	17 - 2	21 - 10	5 - 1	8 - 7	11 - 10	15 - 9	19 - 8	4 - 10	7 - 11	10 - 10	14 - 2	17 - 7
	SPF	No.3	4 - 3	6 - 9	9 - 2	11 - 11	14 - 8	3 - 10	6 - 2	8 - 3	10 - 9	13 - 1	3 - 6	5 - 7	7 - 6	9 - 9	11 - 10
24	DFL	SS	5 - 7	9 - 5	13 - 1	17 - 9	22 - 6	5 - 3	8 - 10	12 - 3	16 - 7	21 - 4	4 - 11	8 - 4	11 - 7	15 - 7	20 - 0
	DFL	No.1	5 - 4	9 - 0	12 - 6	16 - 7	20 - 9	5 - 0	8 - 3	11 - 3	14 - 9	18 - 4	4 - 8	7 - 6	10 - 2	13 - 4	16 - 5
	DFL	No.2	5 - 3	8 - 6	11 - 8	15 - 4	19 - 1	4 - 10	7 - 9	10 - 6	13 - 9	17 - 0	4 - 5	7 - 0	9 - 6	12 - 5	15 - 3
	DFL	No.3	3 - 10	6 - 1	8 - 2	10 - 7	13 - 0	3 - 6	5 - 6	7 - 5	9 - 7	11 - 8	3 - 2	5 - 0	6 - 9	8 - 8	10 - 6
	HF	SS	5 - 3	8 - 9	12 - 3	16 - 6	21 - 3	4 - 11	8 - 3	11 - 5	15 - 5	19 - 10	4 - 8	7 - 9	10 - 9	14 - 6	18 - 7
	HF	No.1	5 - 1	8 - 7	11 - 11	16 - 1	20 - 4	4 - 9	8 - 1	11 - 0	14 - 6	18 - 0	4 - 6	7 - 5	10 - 0	13 - 1	16 - 2
	HF	No.2	4 - 10	8 - 1	11 - 2	14 - 9	18 - 4	4 - 6	7 - 5	10 - 1	13 - 2	16 - 3	4 - 3	6 - 9	9 - 2	11 - 11	14 - 8
	HF	No.3	3 - 9	5 - 11	7 - 11	10 - 3	12 - 6	3 - 5	5 - 4	7 - 2	9 - 3	11 - 3	3 - 1	4 - 11	6 - 6	8 - 5	10 - 2
	SP	SS	5 - 5	9 - 2	12 - 10	17 - 4	22 - 1	5 - 2	8 - 8	12 - 0	16 - 3	20 - 11	4 - 10	8 - 2	11 - 4	15 - 3	19 - 7
	SP	No.1	5 - 3	8 - 9	12 - 3	16 - 0	20 - 9	4 - 11	8 - 3	11 - 5	14 - 4	18 - 4	4 - 8	7 - 8	10 - 5	12 - 11	16 - 5
	SP	No.2	4 - 8	7 - 9	10 - 6	13 - 3	16 - 8	4 - 3	7 - 0	9 - 5	11 - 10	14 - 10	3 - 11	6 - 4	8 - 7	10 - 9	13 - 5
	SP	No.3	3 - 5	5 - 6	7 - 3	9 - 4	11 - 8	3 - 1	5 - 0	6 - 7	8 - 5	10 - 6	2 - 10	4 - 6	6 - 0	7 - 8	9 - 6
	SPF	SS	5 - 1	8 - 7	11 - 11	16 - 1	20 - 8	4 - 9	8 - 1	11 - 2	15 - 0	19 - 3	4 - 6	7 - 7	10 - 6	14 - 2	18 - 1
	SPF	No.1	5 - 0	8 - 4	11 - 5	15 - 1	18 - 8	4 - 8	7 - 7	10 - 3	13 - 6	16 - 7	4 - 4	6 - 11	9 - 4	12 - 2	14 - 11
	SPF	No.2	5 - 0	8 - 4	11 - 5	15 - 1	18 - 8	4 - 8	7 - 7	10 - 3	13 - 6	16 - 7	4 - 4	6 - 11	9 - 4	12 - 2	14 - 11
	SPF	No.3	3 - 9	5 - 11	7 - 11	10 - 3	12 - 6	3 - 5	5 - 4	7 - 2	9 - 3	11 - 3	3 - 1	4 - 11	6 - 6	8 - 5	10 - 2

[1] See Table 3.26M footnotes.

† Spans are limited to 26 feet in length.

Copyright © American Wood Council. Downloaded/printed pursuant to License Agreement. No reproduction or transfer authorized.
AMERICAN WOOD COUNCIL

Table 3.26M (Cont.) **Rafter Deflection Limit = L/180**

Exposure C

Maximum Rafter Spans for Common Lumber Species Resisting Uplift Loads due to Wind (12:12 Slope)

Wind Speed 3-second gust (mph) (See Figure 1.1)			150					160					170				
Rafter Spacing (in.)	Species	Grade	2x4	2x6	2x8	2x10	2x12	2x4	2x6	2x8	2x10	2x12	2x4	2x6	2x8	2x10	2x12
			Maximum Allowable Rafter Span (ft-in.)[1]														
12	DFL	SS	6 - 1	10 - 4	14 - 6	19 - 9	24 - 5	5 - 10	9 - 10	13 - 9	18 - 8	23 - 5	5 - 7	9 - 5	13 - 1	17 - 9	22 - 6
	DFL	No.1	5 - 10	9 - 11	13 - 10	18 - 10	23 - 7	5 - 7	9 - 5	13 - 2	17 - 10	22 - 2	5 - 4	9 - 0	12 - 6	16 - 6	20 - 8
	DFL	No.2	5 - 9	9 - 8	13 - 6	18 - 4	22 - 5	5 - 5	9 - 2	12 - 7	16 - 9	20 - 11	5 - 2	8 - 6	11 - 7	15 - 4	19 - 1
	DFL	No.3	4 - 5	7 - 1	9 - 7	12 - 6	15 - 5	4 - 1	6 - 6	8 - 10	11 - 6	14 - 1	3 - 10	6 - 1	8 - 2	10 - 7	12 - 11
	HF	SS	5 - 9	9 - 8	13 - 6	18 - 4	23 - 1	5 - 5	9 - 2	12 - 10	17 - 4	22 - 1	5 - 2	8 - 9	12 - 2	16 - 6	21 - 3
	HF	No.1	5 - 7	9 - 5	13 - 2	17 - 10	22 - 7	5 - 4	9 - 0	12 - 6	16 - 11	21 - 8	5 - 1	8 - 7	11 - 11	16 - 1	20 - 3
	HF	No.2	5 - 3	8 - 11	12 - 5	16 - 9	21 - 6	5 - 0	8 - 6	11 - 9	15 - 11	20 - 0	4 - 10	8 - 1	11 - 2	14 - 9	18 - 3
	HF	No.3	4 - 4	6 - 11	9 - 4	12 - 1	14 - 11	4 - 0	6 - 4	8 - 7	11 - 1	13 - 7	3 - 9	5 - 11	7 - 11	10 - 3	12 - 6
	SP	SS	6 - 0	10 - 2	14 - 2	19 - 4	24 - 0	5 - 8	9 - 8	13 - 5	18 - 3	23 - 0	5 - 5	9 - 2	12 - 10	17 - 4	22 - 1
	SP	No.1	5 - 9	9 - 8	13 - 6	18 - 4	23 - 1	5 - 5	9 - 2	12 - 10	17 - 4	22 - 1	5 - 2	8 - 9	12 - 2	16 - 6	21 - 3
	SP	No.2	5 - 5	9 - 1	12 - 5	15 - 10	20 - 6	5 - 0	8 - 4	11 - 4	14 - 5	18 - 7	4 - 8	7 - 8	10 - 6	13 - 3	16 - 11
	SP	No.3	4 - 0	6 - 4	8 - 6	11 - 0	13 - 8	3 - 8	5 - 11	7 - 10	10 - 1	12 - 6	3 - 5	5 - 6	7 - 3	9 - 4	11 - 6
	SPF	SS	5 - 7	9 - 5	13 - 2	17 - 10	22 - 7	5 - 4	9 - 0	12 - 6	16 - 11	21 - 8	5 - 1	8 - 7	11 - 11	16 - 1	20 - 8
	SPF	No.1	5 - 5	9 - 2	12 - 9	17 - 4	22 - 1	5 - 2	8 - 9	12 - 2	16 - 5	20 - 6	4 - 11	8 - 4	11 - 5	15 - 0	18 - 8
	SPF	No.2	5 - 5	9 - 2	12 - 9	17 - 4	22 - 1	5 - 2	8 - 9	12 - 2	16 - 5	20 - 6	4 - 11	8 - 4	11 - 5	15 - 0	18 - 8
	SPF	No.3	4 - 4	6 - 11	9 - 4	12 - 1	14 - 11	4 - 0	6 - 4	8 - 7	11 - 1	13 - 7	3 - 9	5 - 11	7 - 11	10 - 3	12 - 6
16	DFL	SS	5 - 6	9 - 3	12 - 11	17 - 5	22 - 2	5 - 3	8 - 9	12 - 3	16 - 6	21 - 3	5 - 0	8 - 5	11 - 8	15 - 8	20 - 2
	DFL	No.1	5 - 3	8 - 10	12 - 2	16 - 1	20 - 1	5 - 0	8 - 2	11 - 2	14 - 8	18 - 2	4 - 9	7 - 7	10 - 3	13 - 6	16 - 8
	DFL	No.2	5 - 2	8 - 4	11 - 4	14 - 11	18 - 6	4 - 9	7 - 8	10 - 5	13 - 8	16 - 10	4 - 5	7 - 1	9 - 7	12 - 6	15 - 5
	DFL	No.3	3 - 9	5 - 11	8 - 0	10 - 4	12 - 7	3 - 6	5 - 6	7 - 4	9 - 6	11 - 7	3 - 3	5 - 1	6 - 10	8 - 9	10 - 8
	HF	SS	5 - 2	8 - 8	12 - 0	16 - 3	20 - 11	4 - 11	8 - 3	11 - 5	15 - 4	19 - 9	4 - 8	7 - 10	10 - 10	14 - 7	18 - 9
	HF	No.1	5 - 0	8 - 5	11 - 8	15 - 10	19 - 8	4 - 9	8 - 0	11 - 0	14 - 5	17 - 10	4 - 7	7 - 6	10 - 1	13 - 3	16 - 4
	HF	No.2	4 - 9	8 - 0	10 - 11	14 - 4	17 - 9	4 - 6	7 - 5	10 - 0	13 - 1	16 - 2	4 - 4	6 - 10	9 - 3	12 - 1	14 - 10
	HF	No.3	3 - 8	5 - 9	7 - 9	10 - 0	12 - 2	3 - 4	5 - 4	7 - 1	9 - 2	11 - 2	3 - 2	4 - 11	6 - 7	8 - 6	10 - 4
	SP	SS	5 - 4	9 - 1	12 - 7	17 - 1	21 - 10	5 - 1	8 - 7	12 - 0	16 - 2	20 - 9	4 - 11	8 - 2	11 - 5	15 - 4	19 - 9
	SP	No.1	5 - 2	8 - 8	12 - 0	16 - 1	20 - 8	4 - 11	8 - 3	11 - 5	14 - 8	18 - 9	4 - 8	7 - 9	10 - 7	13 - 6	17 - 1
	SP	No.2	4 - 7	7 - 6	10 - 3	12 - 11	16 - 6	4 - 3	6 - 11	9 - 5	11 - 10	15 - 0	3 - 11	6 - 5	8 - 8	10 - 11	13 - 10
	SP	No.3	3 - 4	5 - 4	7 - 1	9 - 1	11 - 3	3 - 1	4 - 11	6 - 7	8 - 5	10 - 4	2 - 10	4 - 7	6 - 1	7 - 9	9 - 6
	SPF	SS	5 - 0	8 - 5	11 - 8	15 - 10	20 - 4	4 - 9	8 - 0	11 - 1	15 - 0	19 - 2	4 - 7	7 - 8	10 - 7	14 - 3	18 - 3
	SPF	No.1	4 - 11	8 - 2	11 - 1	14 - 8	18 - 2	4 - 8	7 - 6	10 - 2	13 - 4	16 - 6	4 - 4	7 - 0	9 - 5	12 - 4	15 - 1
	SPF	No.2	4 - 11	8 - 2	11 - 1	14 - 8	18 - 2	4 - 8	7 - 6	10 - 2	13 - 4	16 - 6	4 - 4	7 - 0	9 - 5	12 - 4	15 - 1
	SPF	No.3	3 - 8	5 - 9	7 - 9	10 - 0	12 - 2	3 - 4	5 - 4	7 - 1	9 - 2	11 - 2	3 - 2	4 - 11	6 - 7	8 - 6	10 - 4
19.2	DFL	SS	5 - 1	8 - 7	12 - 0	16 - 2	20 - 10	4 - 10	8 - 2	11 - 4	15 - 4	19 - 8	4 - 8	7 - 10	10 - 10	14 - 7	18 - 8
	DFL	No.1	4 - 11	7 - 11	10 - 9	14 - 2	17 - 6	4 - 7	7 - 4	9 - 11	12 - 11	15 - 11	4 - 3	6 - 9	9 - 2	11 - 11	14 - 7
	DFL	No.2	4 - 8	7 - 5	10 - 0	13 - 2	16 - 2	4 - 3	6 - 10	9 - 3	12 - 0	14 - 9	4 - 0	6 - 4	8 - 6	11 - 1	13 - 7
	DFL	No.3	3 - 4	5 - 4	7 - 1	9 - 2	11 - 2	3 - 1	4 - 11	6 - 7	8 - 5	10 - 3	2 - 11	4 - 7	6 - 1	7 - 10	9 - 5
	HF	SS	4 - 9	8 - 1	11 - 2	15 - 0	19 - 3	4 - 7	7 - 8	10 - 7	14 - 3	18 - 3	4 - 4	7 - 4	10 - 1	13 - 7	17 - 4
	HF	No.1	4 - 8	7 - 10	10 - 7	13 - 11	17 - 2	4 - 5	7 - 2	9 - 9	12 - 8	15 - 8	4 - 2	6 - 8	9 - 0	11 - 8	14 - 4
	HF	No.2	4 - 5	7 - 2	9 - 8	12 - 8	15 - 6	4 - 2	6 - 7	8 - 11	11 - 7	14 - 2	3 - 10	6 - 1	8 - 3	10 - 8	13 - 0
	HF	No.3	3 - 3	5 - 2	6 - 11	8 - 11	10 - 9	3 - 0	4 - 9	6 - 4	8 - 2	9 - 11	2 - 10	4 - 5	5 - 11	7 - 7	9 - 2
	SP	SS	5 - 0	8 - 5	11 - 8	15 - 10	20 - 4	4 - 9	8 - 0	11 - 1	15 - 0	19 - 2	4 - 7	7 - 8	10 - 7	14 - 3	18 - 3
	SP	No.1	4 - 9	8 - 1	11 - 1	14 - 2	18 - 0	4 - 7	7 - 6	10 - 2	12 - 11	16 - 4	4 - 3	6 - 11	9 - 5	11 - 11	15 - 0
	SP	No.2	4 - 1	6 - 9	9 - 1	11 - 5	14 - 6	3 - 9	6 - 2	8 - 4	10 - 6	13 - 3	3 - 6	5 - 9	7 - 9	9 - 8	12 - 2
	SP	No.3	3 - 0	4 - 9	6 - 4	8 - 1	9 - 11	2 - 9	4 - 5	5 - 10	7 - 6	9 - 2	2 - 7	4 - 1	5 - 5	6 - 11	8 - 5
	SPF	SS	4 - 8	7 - 10	10 - 11	14 - 8	18 - 9	4 - 5	7 - 6	10 - 4	13 - 11	17 - 9	4 - 3	7 - 1	9 - 10	13 - 3	16 - 10
	SPF	No.1	4 - 7	7 - 3	9 - 10	12 - 11	15 - 10	4 - 3	6 - 9	9 - 1	11 - 10	14 - 6	3 - 11	6 - 3	8 - 5	10 - 11	13 - 4
	SPF	No.2	4 - 7	7 - 3	9 - 10	12 - 11	15 - 10	4 - 3	6 - 9	9 - 1	11 - 10	14 - 6	3 - 11	6 - 3	8 - 5	10 - 11	13 - 4
	SPF	No.3	3 - 3	5 - 2	6 - 11	8 - 11	10 - 9	3 - 0	4 - 9	6 - 4	8 - 2	9 - 11	2 - 10	4 - 5	5 - 11	7 - 7	9 - 2
24	DFL	SS	4 - 8	7 - 11	10 - 11	14 - 9	18 - 10	4 - 6	7 - 6	10 - 5	14 - 0	17 - 10	4 - 3	7 - 2	9 - 11	13 - 3	16 - 8
	DFL	No.1	4 - 4	6 - 11	9 - 4	12 - 1	14 - 11	4 - 0	6 - 4	8 - 7	11 - 1	13 - 7	3 - 9	5 - 11	7 - 11	10 - 3	12 - 6
	DFL	No.2	4 - 1	6 - 5	8 - 8	11 - 3	13 - 10	3 - 9	5 - 11	8 - 0	10 - 4	12 - 8	3 - 6	5 - 6	7 - 5	9 - 7	11 - 8
	DFL	No.3	2 - 11	4 - 8	6 - 2	7 - 11	9 - 7	2 - 9	4 - 3	5 - 8	7 - 4	8 - 10	2 - 6	4 - 0	5 - 4	6 - 9	8 - 2
	HF	SS	4 - 5	7 - 5	10 - 3	13 - 9	17 - 6	4 - 2	7 - 0	9 - 8	13 - 0	16 - 7	4 - 0	6 - 8	9 - 3	12 - 5	15 - 9
	HF	No.1	4 - 3	6 - 9	9 - 2	11 - 11	14 - 7	3 - 11	6 - 3	8 - 5	10 - 11	13 - 4	3 - 8	5 - 10	7 - 9	10 - 1	12 - 4
	HF	No.2	3 - 11	6 - 3	8 - 4	10 - 10	13 - 3	3 - 7	5 - 9	7 - 9	10 - 0	12 - 2	3 - 4	5 - 4	7 - 2	9 - 3	11 - 2
	HF	No.3	2 - 10	4 - 6	6 - 0	7 - 8	9 - 4	2 - 8	4 - 2	5 - 6	7 - 1	8 - 7	2 - 6	3 - 10	5 - 2	6 - 7	7 - 11
	SP	SS	4 - 7	7 - 9	10 - 8	14 - 5	18 - 5	4 - 5	7 - 4	10 - 2	13 - 8	17 - 5	4 - 2	7 - 0	9 - 8	13 - 0	16 - 7
	SP	No.1	4 - 4	7 - 1	9 - 7	12 - 1	15 - 3	4 - 0	6 - 6	8 - 9	11 - 1	14 - 0	3 - 9	6 - 0	8 - 1	10 - 3	12 - 10
	SP	No.2	3 - 7	5 - 10	7 - 10	9 - 10	12 - 5	3 - 4	5 - 5	7 - 3	9 - 1	11 - 4	3 - 1	5 - 0	6 - 9	8 - 5	10 - 6
	SP	No.3	2 - 7	4 - 2	5 - 6	7 - 0	8 - 7	2 - 5	3 - 10	5 - 1	6 - 6	7 - 11	2 - 3	3 - 7	4 - 9	6 - 0	7 - 4
	SPF	SS	4 - 4	7 - 2	10 - 0	13 - 4	17 - 1	4 - 1	6 - 10	9 - 6	12 - 8	15 - 11	3 - 11	6 - 6	9 - 0	11 - 11	14 - 7
	SPF	No.1	4 - 0	6 - 4	8 - 6	11 - 1	13 - 7	3 - 8	5 - 10	7 - 10	10 - 2	12 - 5	3 - 5	5 - 5	7 - 3	9 - 5	11 - 5
	SPF	No.2	4 - 0	6 - 4	8 - 6	11 - 1	13 - 7	3 - 8	5 - 10	7 - 10	10 - 2	12 - 5	3 - 5	5 - 5	7 - 3	9 - 5	11 - 5
	SPF	No.3	2 - 10	4 - 6	6 - 0	7 - 8	9 - 4	2 - 8	4 - 2	5 - 6	7 - 1	8 - 7	2 - 6	3 - 10	5 - 2	6 - 7	7 - 11

[1] See Table 3.26M footnotes.

† Spans are limited to 26 feet in length.

Copyright © American Wood Council. Downloaded/printed pursuant to License Agreement. No reproduction or transfer authorized.
AMERICAN WOOD COUNCIL

Table 3.26M (Cont.) **Rafter Deflection Limit = L/180**

Maximum Rafter Spans for Common Lumber Species Resisting Uplift Loads due to Wind (12:12 Slope)

Exposure C

Wind Speed 3-second gust (mph) (See Figure 1.1)			180					195				
Rafter Spacing (in.)	Species	Grade	2x4	2x6	2x8	2x10	2x12	2x4	2x6	2x8	2x10	2x12
			Maximum Allowable Rafter Span (ft-in.)[1]									
12	DFL	SS	5 - 4	9 - 0	12 - 6	16 - 11	21 - 8	5 - 0	8 - 5	11 - 8	15 - 9	20 - 4
	DFL	No.1	5 - 1	8 - 6	11 - 7	15 - 3	18 - 11	4 - 9	7 - 8	10 - 5	13 - 7	16 - 10
	DFL	No.2	4 - 11	7 - 11	10 - 9	14 - 2	17 - 6	4 - 6	7 - 2	9 - 8	12 - 8	15 - 7
	DFL	No.3	3 - 7	5 - 8	7 - 7	9 - 10	12 - 0	3 - 3	5 - 2	6 - 10	8 - 10	10 - 9
	HF	SS	5 - 0	8 - 5	11 - 8	15 - 9	20 - 2	4 - 8	7 - 11	10 - 11	14 - 8	18 - 10
	HF	No.1	4 - 10	8 - 2	11 - 4	15 - 0	18 - 7	4 - 7	7 - 6	10 - 3	13 - 4	16 - 6
	HF	No.2	4 - 7	7 - 8	10 - 4	13 - 7	16 - 9	4 - 4	6 - 11	9 - 4	12 - 2	14 - 11
	HF	No.3	3 - 6	5 - 6	7 - 4	9 - 6	11 - 7	3 - 2	5 - 0	6 - 8	8 - 7	10 - 5
	SP	SS	5 - 3	8 - 9	12 - 3	16 - 6	21 - 3	4 - 11	8 - 3	11 - 5	15 - 5	19 - 10
	SP	No.1	5 - 0	8 - 5	11 - 8	15 - 3	19 - 6	4 - 8	7 - 10	10 - 8	13 - 7	17 - 3
	SP	No.2	4 - 4	7 - 2	9 - 9	12 - 3	15 - 7	4 - 0	6 - 6	8 - 9	11 - 0	13 - 11
	SP	No.3	3 - 2	5 - 1	6 - 9	8 - 8	10 - 8	2 - 11	4 - 7	6 - 2	7 - 10	9 - 7
	SPF	SS	4 - 10	8 - 2	11 - 4	15 - 4	19 - 8	4 - 7	7 - 8	10 - 8	14 - 4	18 - 4
	SPF	No.1	4 - 9	7 - 9	10 - 7	13 - 10	17 - 2	4 - 5	7 - 0	9 - 6	12 - 5	15 - 3
	SPF	No.2	4 - 9	7 - 9	10 - 7	13 - 10	17 - 2	4 - 5	7 - 0	9 - 6	12 - 5	15 - 3
	SPF	No.3	3 - 6	5 - 6	7 - 4	9 - 6	11 - 7	3 - 2	5 - 0	6 - 8	8 - 7	10 - 5
16	DFL	SS	4 - 9	8 - 0	11 - 1	15 - 0	19 - 2	4 - 6	7 - 6	10 - 5	14 - 0	17 - 11
	DFL	No.1	4 - 5	7 - 1	9 - 7	12 - 6	15 - 4	4 - 0	6 - 5	8 - 7	11 - 2	13 - 8
	DFL	No.2	4 - 2	6 - 7	8 - 11	11 - 7	14 - 3	3 - 9	6 - 0	8 - 1	10 - 5	12 - 9
	DFL	No.3	3 - 0	4 - 9	6 - 4	8 - 2	9 - 11	2 - 9	4 - 4	5 - 9	7 - 4	8 - 11
	HF	SS	4 - 6	7 - 6	10 - 5	13 - 11	17 - 10	4 - 2	7 - 1	9 - 9	13 - 1	16 - 8
	HF	No.1	4 - 4	6 - 11	9 - 5	12 - 3	15 - 1	4 - 0	6 - 3	8 - 6	11 - 0	13 - 5
	HF	No.2	4 - 0	6 - 5	8 - 7	11 - 2	13 - 8	3 - 8	5 - 9	7 - 9	10 - 1	12 - 3
	HF	No.3	2 - 11	4 - 7	6 - 2	7 - 11	9 - 7	2 - 8	4 - 2	5 - 7	7 - 2	8 - 8
	SP	SS	4 - 8	7 - 10	10 - 11	14 - 8	18 - 9	4 - 5	7 - 5	10 - 2	13 - 8	17 - 6
	SP	No.1	4 - 5	7 - 3	9 - 10	12 - 6	15 - 9	4 - 0	6 - 6	8 - 10	11 - 2	14 - 1
	SP	No.2	3 - 8	6 - 0	8 - 1	10 - 2	12 - 9	3 - 4	5 - 5	7 - 4	9 - 1	11 - 5
	SP	No.3	2 - 8	4 - 3	5 - 8	7 - 3	8 - 10	2 - 5	3 - 11	5 - 2	6 - 6	8 - 0
	SPF	SS	4 - 4	7 - 4	10 - 1	13 - 7	17 - 4	4 - 1	6 - 11	9 - 6	12 - 9	16 - 0
	SPF	No.1	4 - 1	6 - 6	8 - 9	11 - 5	13 - 11	3 - 8	5 - 11	7 - 11	10 - 3	12 - 6
	SPF	No.2	4 - 1	6 - 6	8 - 9	11 - 5	13 - 11	3 - 8	5 - 11	7 - 11	10 - 3	12 - 6
	SPF	No.3	2 - 11	4 - 7	6 - 2	7 - 11	9 - 7	2 - 8	4 - 2	5 - 7	7 - 2	8 - 8
19.2	DFL	SS	4 - 5	7 - 6	10 - 4	13 - 11	17 - 9	4 - 2	7 - 0	9 - 8	13 - 0	16 - 0
	DFL	No.1	4 - 0	6 - 4	8 - 6	11 - 0	13 - 6	3 - 7	5 - 8	7 - 8	9 - 11	12 - 1
	DFL	No.2	3 - 9	5 - 11	7 - 11	10 - 3	12 - 6	3 - 5	5 - 4	7 - 2	9 - 3	11 - 3
	DFL	No.3	2 - 8	4 - 3	5 - 8	7 - 3	8 - 9	2 - 6	3 - 10	5 - 2	6 - 7	7 - 11
	HF	SS	4 - 2	7 - 0	9 - 8	12 - 11	16 - 6	3 - 11	6 - 7	9 - 1	12 - 2	15 - 3
	HF	No.1	3 - 11	6 - 2	8 - 4	10 - 10	13 - 3	3 - 7	5 - 7	7 - 6	9 - 9	11 - 10
	HF	No.2	3 - 7	5 - 8	7 - 8	9 - 11	12 - 1	3 - 3	5 - 2	6 - 11	8 - 11	10 - 10
	HF	No.3	2 - 8	4 - 1	5 - 6	7 - 1	8 - 6	2 - 5	3 - 9	5 - 0	6 - 4	7 - 8
	SP	SS	4 - 4	7 - 4	10 - 1	13 - 7	17 - 4	4 - 1	6 - 11	9 - 6	12 - 9	16 - 3
	SP	No.1	4 - 0	6 - 5	8 - 9	11 - 0	13 - 10	3 - 7	5 - 10	7 - 10	9 - 11	12 - 5
	SP	No.2	3 - 4	5 - 4	7 - 2	9 - 0	11 - 3	3 - 0	4 - 10	6 - 6	8 - 1	10 - 2
	SP	No.3	2 - 5	3 - 10	5 - 1	6 - 5	7 - 10	2 - 2	3 - 6	4 - 7	5 - 10	7 - 1
	SPF	SS	4 - 1	6 - 10	9 - 5	12 - 7	15 - 9	3 - 10	6 - 5	8 - 10	11 - 6	14 - 1
	SPF	No.1	3 - 8	5 - 10	7 - 9	10 - 1	12 - 4	3 - 4	5 - 3	7 - 0	9 - 1	11 - 0
	SPF	No.2	3 - 8	5 - 10	7 - 9	10 - 1	12 - 4	3 - 4	5 - 3	7 - 0	9 - 1	11 - 0
	SPF	No.3	2 - 8	4 - 1	5 - 6	7 - 1	8 - 6	2 - 5	3 - 9	5 - 0	6 - 4	7 - 8
24	DFL	SS	4 - 1	6 - 10	9 - 6	12 - 6	15 - 4	3 - 10	6 - 5	8 - 7	11 - 2	13 - 8
	DFL	No.1	3 - 6	5 - 6	7 - 4	9 - 6	11 - 7	3 - 2	5 - 0	6 - 8	8 - 7	10 - 5
	DFL	No.2	3 - 3	5 - 2	6 - 11	8 - 11	10 - 9	3 - 0	4 - 8	6 - 3	8 - 0	9 - 8
	DFL	No.3	2 - 4	3 - 9	4 - 11	6 - 4	7 - 7	2 - 2	3 - 5	4 - 6	5 - 9	6 - 11
	HF	SS	3 - 10	6 - 5	8 - 10	11 - 10	14 - 7	3 - 7	6 - 0	8 - 3	10 - 8	13 - 1
	HF	No.1	3 - 5	5 - 5	7 - 3	9 - 4	11 - 5	3 - 1	4 - 11	6 - 7	8 - 5	10 - 3
	HF	No.2	3 - 2	5 - 0	6 - 8	8 - 7	10 - 5	2 - 10	4 - 6	6 - 0	7 - 9	9 - 4
	HF	No.3	2 - 4	3 - 7	4 - 10	6 - 2	7 - 5	2 - 1	3 - 3	4 - 4	5 - 7	6 - 8
	SP	SS	4 - 0	6 - 9	9 - 3	12 - 5	15 - 9	3 - 9	6 - 4	8 - 8	11 - 6	14 - 5
	SP	No.1	3 - 6	5 - 7	7 - 7	9 - 6	11 - 10	3 - 2	5 - 1	6 - 10	8 - 7	10 - 8
	SP	No.2	2 - 11	4 - 8	6 - 3	7 - 10	9 - 9	2 - 8	4 - 3	5 - 8	7 - 1	8 - 9
	SP	No.3	2 - 1	3 - 4	4 - 5	5 - 7	6 - 10	1 - 11	3 - 1	4 - 0	5 - 1	6 - 2
	SPF	SS	3 - 9	6 - 3	8 - 6	11 - 0	13 - 6	3 - 6	5 - 8	7 - 8	9 - 11	12 - 1
	SPF	No.1	3 - 2	5 - 1	6 - 9	8 - 9	10 - 7	2 - 11	4 - 7	6 - 2	7 - 11	9 - 6
	SPF	No.2	3 - 2	5 - 1	6 - 9	8 - 9	10 - 7	2 - 11	4 - 7	6 - 2	7 - 11	9 - 6
	SPF	No.3	2 - 4	3 - 7	4 - 10	6 - 2	7 - 5	2 - 1	3 - 3	4 - 4	5 - 7	6 - 8

[1] See Table 3.26M footnotes.

† Spans are limited to 26 feet in length.

Copyright © American Wood Council. Downloaded/printed pursuant to License Agreement. No reproduction or transfer authorized.

Footnotes to Table 3.26M

[1] Tabulated rafter spans (horizontal projection) in Table 3.26M are based on a 12:12 roof pitch and L/180 deflection limit. For other roof pitches and deflection criteria, multiply tabulated values by the following adjustments.

Deflection	Roof Pitch											
Limit	1.5:12	2:12	3:12	4:12	5:12	6:12	7:12	8:12	9:12	10:12	11:12	12:12
L/180	1.14	1.13	1.11	1.09	1.06	1.03	1.22	1.18	1.13	1.09	1.04	1.00
L/240	1.11	1.10	1.08	1.06	1.03	1.00	1.09	1.05	1.01	0.97	0.93	0.89
L/360	0.97	0.96	0.95	0.93	0.90	0.87	0.92	0.88	0.85	0.81	0.78	0.75

Copyright © American Wood Council. Downloaded/printed pursuant to License Agreement. No reproduction or transfer authorized.
AMERICAN WOOD COUNCIL

Table 3.27 Representative Metal Plate Connected Wood Roof Truss Spans

Actual Design Spans Shall Be Obtained from the Truss Manufacturer

(Top Chord Live Load = 20 psf; Top Chord Dead Load = 10 psf; Bottom Chord Dead Load = 10 psf)

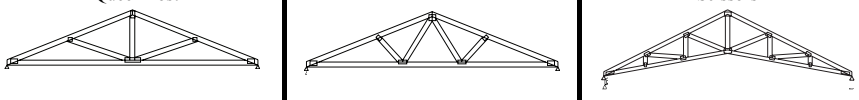

		Queen Post		Fink		Scissors	
		2x4	2x6	2x4	2x6	2x4	2x6
		Representative Roof Truss Spans for 24" o.c. Spacing					
Roof Pitch	Species and Grade	(ft- in.)	(ft- in.)	(ft- in.)	(ft- in.)	(ft- in.)	(ft- in.)
3:12	Douglas Fir-Larch SS	(22-4) 22-4	(29-0) 29-0	(30-5) 30-10	(36-0) 36-0	(24-8) 25-1	(36-0) 36-0
	Douglas Fir-Larch #1	(19-0) 19-0	(27-0) 27-0	(27-10) 28-3	(36-0) 36-0	(21-9) 23-2	(29-3) 32-9
	Douglas Fir-Larch #2	(17-3) 17-3	(26-0) 26-0	(25-7) 25-7	(36-0) 36-0	(19-3) 20-9	(26-0) 28-6
	Hem-Fir SS	(20-8) 20-8	(26-8) 26-8	(29-1) 29-6	(36-0) 36-0	(23-4) 23-10	(35-0) 35-8
	Hem-Fir #1	(18-1) 18-1	(25-5) 25-5	(26-10) 26-10	(36-0) 36-0	(19-10) 21-5	(27-4) 29-6
	Hem-Fir #2	(16-6) 16-6	(23-8) 23-8	(24-5) 24-5	(35-2) 35-2	(16-10) 18-2	(23-6) 25-4
	Southern Pine SS	(22-4) 22-4	(29-0) 29-0	(30-5) 30-10	(36-0) 36-0	(24-8) 25-1	(36-0) 36-0
	Southern Pine #1	(20-8) 20-8	(27-5) 27-5	(28-11) 29-5	(36-0) 36-0	(23-0) 24-0	(31-7) 34-1
	Southern Pine #2	(18-9) 18-9	(26-3) 26-3	(27-1) 27-10	(36-0) 36-0	(18-6) 19-11	(25-11) 27-11
	Spruce-Pine-Fir SS	(19-9) 19-9	(25-10) 25-10	(28-2) 28-7	(36-0) 36-0	(22-1) 23-0	(30-10) 33-3
	Spruce-Pine-Fir #1	(16-10) 16-10	(24-6) 24-6	(23-4) 24-10	(32-7) 34-8	(16-3) 17-6	(21-0) 23-9
	Spruce-Pine-Fir #2	(16-10) 16-10	(24-6) 24-6	(23-4) 24-10	(32-7) 34-8	(14-11) 16-1	(20-6) 22-0
4:12	Douglas Fir-Larch SS	(22-4) 22-4	(29-0) 29-0	(33-2) 33-2	(36-0) 36-0	(28-3) 28-9	(36-0) 36-0
	Douglas Fir-Larch #1	(19-0) 19-0	(27-0) 27-0	(28-3) 28-3	(36-0) 36-0	(26-0) 26-7	(36-0) 36-0
	Douglas Fir-Larch #2	(17-3) 17-3	(26-0) 26-0	(25-7) 25-7	(36-0) 36-0	(24-2) 25-5	(32-6) 35-9
	Hem-Fir SS	(20-8) 20-8	(26-8) 26-8	(30-9) 30-9	(36-0) 36-0	(26-10) 27-4	(36-0) 36-0
	Hem-Fir #1	(18-1) 18-1	(25-5) 25-5	(26-10) 26-10	(36-0) 36-0	(24-10) 25-5	(34-4) 36-0
	Hem-Fir #2	(16-6) 16-6	(23-8) 23-8	(24-5) 24-5	(35-2) 35-2	(21-3) 22-11	(29-5) 31-9
	Southern Pine SS	(22-4) 22-4	(29-0) 29-0	(33-2) 33-2	(36-0) 36-0	(28-3) 28-9	(36-0) 36-0
	Southern Pine #1	(20-8) 20-8	(27-5) 27-5	(30-8) 30-8	(36-0) 36-0	(27-0) 27-6	(36-0) 36-0
	Southern Pine #2	(18-9) 18-9	(26-3) 26-3	(27-10) 27-10	(36-0) 36-0	(23-4) 25-2	(32-6) 35-1
	Spruce-Pine-Fir SS	(19-9) 19-9	(25-10) 25-10	(29-4) 29-4	(36-0) 36-0	(25-11) 26-5	(36-0) 36-0
	Spruce-Pine-Fir #1	(16-10) 16-10	(24-6) 24-6	(25-0) 25-0	(36-0) 36-0	(18-10) 20-4	(25-7) 27-7
	Spruce-Pine-Fir #2	(16-10) 16-10	(24-6) 24-6	(25-0) 25-0	(36-0) 36-0	(18-10) 20-4	(25-7) 27-7
5:12	Douglas Fir-Larch SS	(22-4) 22-4	(29-0) 29-0	(33-2) 33-2	(36-0) 36-0	(31-1) 31-7	(36-0) 36-0
	Douglas Fir-Larch #1	(19-0) 19-0	(27-0) 27-0	(28-3) 28-3	(36-0) 36-0	(28-8) 29-3	(36-0) 36-0
	Douglas Fir-Larch #2	(17-3) 17-3	(26-0) 26-0	(25-7) 25-7	(36-0) 36-0	(27-5) 28-0	(36-0) 36-0
	Hem-Fir SS	(20-8) 20-8	(26-8) 26-8	(30-9) 30-9	(36-0) 36-0	(29-7) 30-1	(36-0) 36-0
	Hem-Fir #1	(18-1) 18-1	(25-5) 25-5	(26-10) 26-10	(36-0) 36-0	(27-6) 28-1	(36-0) 36-0
	Hem-Fir #2	(16-6) 16-6	(23-8) 23-8	(24-5) 24-5	(35-2) 35-2	(25-3) 26-10	(35-1) 36-0
	Southern Pine SS	(22-4) 22-4	(29-0) 29-0	(33-2) 33-2	(36-0) 36-0	(31-1) 31-7	(36-0) 36-0
	Southern Pine #1	(20-8) 20-8	(27-5) 27-5	(30-8) 30-8	(36-0) 36-0	(29-9) 30-2	(36-0) 36-0
	Southern Pine #2	(18-9) 18-9	(26-3) 26-3	(27-10) 27-10	(36-0) 36-0	(27-8) 28-10	(36-0) 36-0
	Spruce-Pine-Fir SS	(19-9) 19-9	(25-10) 25-10	(29-4) 29-4	(36-0) 36-0	(28-7) 29-1	(36-0) 36-0
	Spruce-Pine-Fir #1	(16-10) 16-10	(24-6) 24-6	(25-0) 25-0	(36-0) 36-0	(22-6) 24-3	(30-6) 33-0
	Spruce-Pine-Fir #2	(16-10) 16-10	(24-6) 24-6	(25-0) 25-0	(36-0) 36-0	(22-6) 24-3	(30-6) 33-0

GENERAL NOTES

- This table provides examples for the parameters shown and is intended to be used for actual design purposes. Spans have been determined in accordance with the 2007 edition of the Truss Plate Institute's *National Design Standard for Metal Plate Connected Wood Truss Construction, ANSI/TPI 1-07*, and the 2009 *International Residential Code® (IRC®)*. Truss spans based on different loads, lumber species and grades, truss depths and web configurations are possible. Roof spans greater than 36 feet are possible but are limited by the context of this manual. Contact a truss manufacturer for actual roof truss designs and solutions to each specific application.
- This table applies only to wood roof trusses that are shop-built and designed and manufactured in accordance with ANSI/TPI 1.
- The spans apply to roof trusses used in enclosed structures or where the moisture content in use does not exceed 19 percent for an extended period of time.
- Representative spans for the scissors trusses assume the bottom chord pitch is one half the top chord pitch.
- Spans in parentheses are for ground snow loads equal to 30 psf that have been reduced to a flat roof snow load of 23.1 psf per the provisions of ASCE 7-05 for a Category II building, with and Exposure factor, $C_e = 1.0$ and a Thermal Factor, $C_t = 1.1$. Unbalanced snow loads have also been considered. Spans not in parentheses are for uniform roof live loads equal to 20 psf. Unbalanced roof live loads have also been considered. These trusses have also been designed for a 10 psf bottom chord live load applied non-concurrently with any other live loads. Wind loads have not been considered.

Copyright © American Wood Council. Downloaded/printed pursuant to License Agreement. No reproduction or transfer authorized.

Table 3.28 Hip and Valley Beam Sizes

$L/\Delta_{LL} = 180$

		Roof Live Load		Ground Snow Load					
		20 psf		30 psf		50 psf		70 psf	
		Roof Dead Load							
Hip or Valley Beam		10 psf	20 psf	10 psf	20 psf	10 psf	20 psf	10 psf	20 psf
Horizontal Span (ft - in.)	Hip or Valley Area (ft x ft)	Hip and Valley Beam Size[1,2]							
5-8	4'x 4'	1-2x6	1-2x6	1-2x6	1-2x6	1-2x6	1-2x6	1-2x6	1-2x6
8-6	6'x 6'	1-2x6	1-2x6	1-2x6	2-2x6	2-2x6	2-2x6	2-2x6	2-2x6
11-4	8'x 8'	2-2x6	2-2x8	2-2x6	2-2x8	2-2x8	2-2x10	2-2x10	2-2x10
14-2	10'x 10'	2-2x8	2-2x10	2-2x10	2-2x12	2-2x12	3-2x10	3-2x12	3-2x12
17-0	12'x 12'	2-2x12	3-2x10	3-2x10	3-2x12	3-2x12	4-2x12	4-2x12	-
19-10	14'x 14'	3-2x12	4-2x12	4-2x12	-	-	-	-	-
22-8	16'x 16'	4-2x12	-	-	-	-	-	-	-

1 Tabulated sizes are based on the lowest F_b and E for #2 Grade Douglas Fir-Larch, Hem-Fir, Southern PIne, and Spruce-Pine-Fir.

2 Tabulated sizes are checked for live load deflection only.

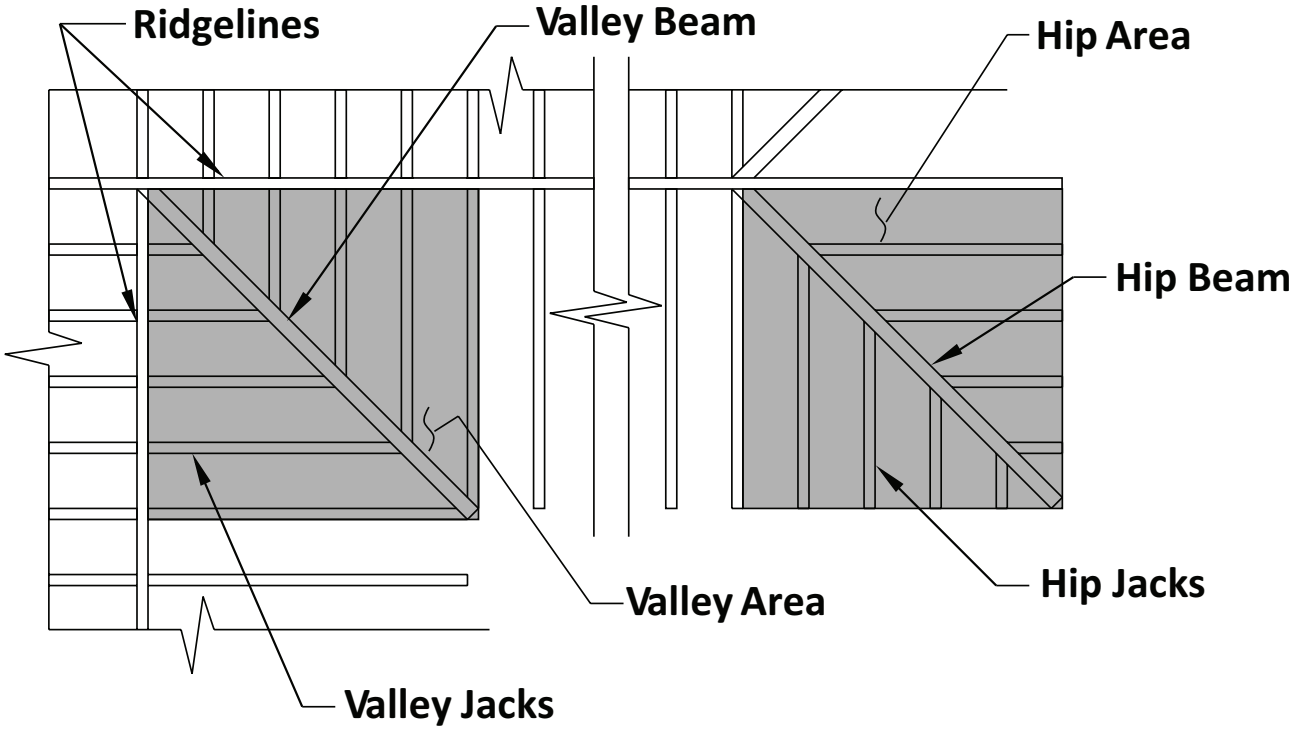

Copyright © American Wood Council. Downloaded/printed pursuant to License Agreement. No reproduction or transfer authorized.

Table 3.29 Ridge Beam Spans

Dead Load Assumptions: Roof/Ceiling Assembly = 20 psf, L/Δ_{LL} = 240

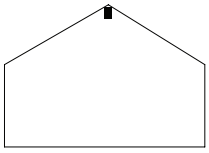

Ridge Beam Supporting	Size	Roof Live Load 20 psf			Ground Snow Load 30 psf			Ground Snow Load 50 psf			Ground Snow Load 70 psf		
		Building Width (ft)											
		12	24	36	12	24	36	12	24	36	12	24	36
		Maximum Ridge Beam Spans (ft-in.) for Common Lumber Species[1,3]											
Roof and Ceiling (attached to rafters)	1-2x6	5 - 1	3 - 7	3 - 0	4 - 9	3 - 4	2 - 9	4 - 1	2 - 10	2 - 4	3 - 7	2 - 7	2 - 1
	1-2x8	6 - 6	4 - 7	3 - 9	6 - 0	4 - 3	3 - 6	5 - 2	3 - 8	3 - 0	4 - 7	3 - 3	2 - 8
	1-2x10	7 - 9	5 - 5	4 - 5	7 - 1	5 - 0	4 - 1	6 - 1	4 - 4	3 - 6	5 - 5	3 - 10	3 - 2
	1-2x12	9 - 1	6 - 5	5 - 3	8 - 5	5 - 11	4 - 10	7 - 2	5 - 1	4 - 2	6 - 5	4 - 6	3 - 8
	2-2x4	5 - 1	3 - 7	2 - 11	4 - 8	3 - 4	2 - 8	4 - 0	2 - 10	2 - 4	3 - 7	2 - 6	2 - 1
	2-2x6	7 - 7	5 - 4	4 - 5	7 - 0	5 - 0	4 - 1	6 - 0	4 - 3	3 - 6	5 - 4	3 - 10	3 - 1
	2-2x8	9 - 8	6 - 10	5 - 7	8 - 11	6 - 4	5 - 2	7 - 8	5 - 5	4 - 5	6 - 10	4 - 10	3 - 11
	2-2x10	11 - 5	8 - 1	6 - 7	10 - 7	7 - 6	6 - 1	9 - 1	6 - 5	5 - 3	8 - 1	5 - 8	4 - 8
	2-2x12	13 - 6	9 - 6	7 - 9	12 - 5	8 - 10	7 - 2	10 - 8	7 - 7	6 - 2	9 - 6	6 - 9	5 - 6
	3-2x8	12 - 1	8 - 6	7 - 0	11 - 2	7 - 11	6 - 5	9 - 7	6 - 9	5 - 6	8 - 6	6 - 0	4 - 11
	3-2x10	14 - 4	10 - 1	8 - 3	13 - 3	9 - 4	7 - 8	11 - 4	8 - 0	6 - 7	10 - 1	7 - 2	5 - 10
	3-2x12	16 - 10	11 - 11	9 - 9	15 - 7	11 - 0	9 - 0	13 - 4	9 - 5	7 - 9	11 - 11	8 - 5	6 - 10
	4-2x8	13 - 11	9 - 10	8 - 1	12 - 10	9 - 1	7 - 5	11 - 1	7 - 10	6 - 5	9 - 10	7 - 0	5 - 8
	4-2x10	16 - 6	11 - 8	9 - 7	15 - 3	10 - 10	8 - 10	13 - 1	9 - 3	7 - 7	11 - 8	8 - 3	6 - 9
	4-2x12	19 - 6	13 - 9	11 - 3	18 - 0	12 - 9	10 - 5	15 - 5	10 - 11	8 - 11	13 - 9	9 - 9	7 - 11
	Size	Maximum Ridge Beam Spans (ft-in.) for Glued Laminated Timber Beams[2,3]											
	3.125x5.500	10 - 6	7 - 5	6 - 0	9 - 8	6 - 10	5 - 7	8 - 4	5 - 10	4 - 9	7 - 5	5 - 3	4 - 3
	3.125x6.875	13 - 1	9 - 3	7 - 7	12 - 1	8 - 7	7 - 0	10 - 4	7 - 4	6 - 0	9 - 3	6 - 6	5 - 4
	3.125x8.250	15 - 8	11 - 1	9 - 1	14 - 6	10 - 3	8 - 4	12 - 5	8 - 10	7 - 2	11 - 1	7 - 10	6 - 5
	3.125x9.625	18 - 4	12 - 11	10 - 7	16 - 11	12 - 0	9 - 9	14 - 6	10 - 3	8 - 5	12 - 11	9 - 2	7 - 5
	3.125x11.000	20 - 11	14 - 10	12 - 1	19 - 4	13 - 8	11 - 2	16 - 7	11 - 9	9 - 7	14 - 9	10 - 5	8 - 6
	3.125x12.375	23 - 6	16 - 8	13 - 7	21 - 9	15 - 5	12 - 7	18 - 8	13 - 2	10 - 9	16 - 7	11 - 9	9 - 7
	3.125x13.750	26 - 2	18 - 6	15 - 1	24 - 2	17 - 1	14 - 0	20 - 9	14 - 8	12 - 0	18 - 5	13 - 1	10 - 8
	3.125x15.125	28 - 8	20 - 4	16 - 7	26 - 7	18 - 10	15 - 4	22 - 10	16 - 2	13 - 2	20 - 4	14 - 4	11 - 9
	3.125x16.500	31 - 1	22 - 2	18 - 1	28 - 10	20 - 6	16 - 9	24 - 11	17 - 7	14 - 4	22 - 2	15 - 8	12 - 9
	3.125x17.875	33 - 5	24 - 0	19 - 8	31 - 0	22 - 3	18 - 2	26 - 9	19 - 1	15 - 7	23 - 11	17 - 0	13 - 10
	3.125x19.250	35 - 8	25 - 8	21 - 2	33 - 1	23 - 10	19 - 6	28 - 7	20 - 6	16 - 9	25 - 7	18 - 3	14 - 11
	3.125x20.625	38 - 0	27 - 4	22 - 6	35 - 3	25 - 4	20 - 11	30 - 6	21 - 11	18 - 0	27 - 3	19 - 7	16 - 0
	3.125x22.000	40 - 3	29 - 0	23 - 10	37 - 4	26 - 10	22 - 2	32 - 4	23 - 3	19 - 2	28 - 11	20 - 9	17 - 1
	3.125x23.375	42 - 7	30 - 7	25 - 3	39 - 6	28 - 4	23 - 5	34 - 1	24 - 6	20 - 3	30 - 6	21 - 11	18 - 1
	3.125x24.750	44 - 10	32 - 2	26 - 7	41 - 7	29 - 10	24 - 8	35 - 11	25 - 10	21 - 4	32 - 2	23 - 1	19 - 1
	5.125x5.500	12 - 7	9 - 6	7 - 9	12 - 0	8 - 9	7 - 2	10 - 1	7 - 6	6 - 2	9 - 0	6 - 8	5 - 5
	5.125x6.875	15 - 8	11 - 10	9 - 8	14 - 11	10 - 11	8 - 11	12 - 7	9 - 5	7 - 8	11 - 3	8 - 4	6 - 10
	5.125x8.250	18 - 10	14 - 2	11 - 7	17 - 11	13 - 2	10 - 9	15 - 2	11 - 3	9 - 2	13 - 6	10 - 0	8 - 2
	5.125x9.625	22 - 0	16 - 7	13 - 6	20 - 11	15 - 4	12 - 6	17 - 8	13 - 2	10 - 9	15 - 9	11 - 8	9 - 7
	5.125x11.000	25 - 1	18 - 11	15 - 6	23 - 11	17 - 6	14 - 4	20 - 2	15 - 0	12 - 3	18 - 0	13 - 4	10 - 11
	5.125x12.375	28 - 3	21 - 3	17 - 5	26 - 11	19 - 8	16 - 1	22 - 8	16 - 11	13 - 10	20 - 3	15 - 0	12 - 3
	5.125x13.750	31 - 4	23 - 5	19 - 3	29 - 11	21 - 8	17 - 10	25 - 3	18 - 9	15 - 4	22 - 6	16 - 9	13 - 8
	5.125x15.125	34 - 6	25 - 6	21 - 0	32 - 11	23 - 8	19 - 6	27 - 9	20 - 5	16 - 10	24 - 9	18 - 4	15 - 0
	5.125x16.500	37 - 8	27 - 7	22 - 9	35 - 7	25 - 7	21 - 1	30 - 3	22 - 1	18 - 3	27 - 1	19 - 10	16 - 4
	5.125x17.875	40 - 9	29 - 8	24 - 5	38 - 3	27 - 6	22 - 8	32 - 9	23 - 9	19 - 7	29 - 4	21 - 3	17 - 7
	5.125x19.250	43 - 11	31 - 9	26 - 2	40 - 11	29 - 5	24 - 3	35 - 4	25 - 5	21 - 0	31 - 7	22 - 9	18 - 9
	5.125x20.625	47 - 0	33 - 9	27 - 10	43 - 7	31 - 4	25 - 10	37 - 8	27 - 1	22 - 4	33 - 8	24 - 3	20 - 0
	5.125x22.000	49 - 9	35 - 9	29 - 6	46 - 2	33 - 2	27 - 4	39 - 11	28 - 8	23 - 8	35 - 9	25 - 8	21 - 2
	5.125x23.375	52 - 7	37 - 10	31 - 2	48 - 9	35 - 1	28 - 11	42 - 2	30 - 4	25 - 0	37 - 9	27 - 2	22 - 4
	5.125x24.750	55 - 5	39 - 10	32 - 10	51 - 4	36 - 11	30 - 5	44 - 5	31 - 11	26 - 4	39 - 9	28 - 7	23 - 7

1 Tabulated spans are based on the lowest F_b, F_v, and E for #2 Grade Douglas Fir-Larch, Hem-Fir, Southern PIne, and Spruce-Pine-Fir. For #3 Grade lumber, spans shall be multiplied by 0.75.

2 Tabulated spans assume 20F combination glulam with a minimum F_{bx}=2,000psi, F_{vx}=210psi, and E=1,500,000psi.

3 Spans checked for live load deflection only.

Copyright © American Wood Council. Downloaded/printed pursuant to License Agreement. No reproduction or transfer authorized.

List of Appendix A Wind Load Tables for Uplift Strap and Ridge Strap Connections

A-3.4 Uplift Strap Connection Requirements (Roof-to-Wall, Wall-to-Wall, and Wall-to-Foundation) - Exposure B..... 332

A-3.4 Uplift Strap Connection Requirements (Roof-to-Wall, Wall-to-Wall, and Wall-to-Foundation) - Exposure C..... 333

A-3.6 Ridge Tension Strap Connection Requirements for Wind - Exposure B..... 334

A-3.6 Ridge Tension Strap Connection Requirements for Wind - Exposure C..... 335

Copyright © American Wood Council. Downloaded/printed pursuant to License Agreement. No reproduction or transfer authorized.
AMERICAN WOOD COUNCIL

Table A-3.4 Uplift Strap Connection Requirements (Roof-to-Wall, Wall-to-Wall, and Wall-to-Foundation)

Exposure B

(Prescriptive Alternative to Table 3.4)

Dead Load Assumptions: Roof/Ceiling Assembly DL = 15 psf

Wind Speed 3-second gust (mph) (See Figure 1.1)		90	95	100	105	110	115	120	130	140	150	160	170	180	195
Framing Spacing (in.)	Roof Span (ft.)	Number of 8d Common Nails or 10d Box Nails in Each End of 1-1/4" x 20 gage Strap[1,2,3]													
12	12	1	1	1	1	1	1	1	1	1	2	2	2	2	3
	16	1	1	1	1	1	1	1	1	2	2	2	3	3	3
	20	1	1	1	1	1	1	1	2	2	2	3	3	3	4
	24	1	1	1	1	1	1	1	2	2	2	3	3	4	4
	28	1	1	1	1	1	1	1	2	2	3	3	4	4	5
	32	1	1	1	1	1	1	2	2	2	3	3	4	5	5
	36	1	1	1	1	1	1	2	2	3	3	4	4	5	6
16	12	1	1	1	1	1	1	1	1	2	2	2	3	3	4
	16	1	1	1	1	1	1	1	2	2	2	3	3	4	4
	20	1	1	1	1	1	1	2	2	2	3	3	4	4	5
	24	1	1	1	1	1	1	2	2	3	3	4	4	5	6
	28	1	1	1	1	1	2	2	2	3	3	4	5	5	6
	32	1	1	1	1	1	2	2	2	3	4	4	5	6	7
	36	1	1	1	1	2	2	2	3	3	4	5	6	6	-
19.2	12	1	1	1	1	1	1	1	2	2	2	3	3	4	4
	16	1	1	1	1	1	1	2	2	2	3	3	4	4	5
	20	1	1	1	1	1	1	2	2	3	3	4	4	5	6
	24	1	1	1	1	1	2	2	2	3	4	4	5	6	7
	28	1	1	1	1	1	2	2	3	3	4	5	5	6	-
	32	1	1	1	1	2	2	2	3	4	4	5	6	7	-
	36	1	1	1	1	2	2	2	3	4	5	6	7	-	-
24	12	1	1	1	1	1	1	2	2	2	3	3	4	4	5
	16	1	1	1	1	1	2	2	2	3	3	4	5	5	6
	20	1	1	1	1	1	2	2	3	3	4	5	5	6	7
	24	1	1	1	1	2	2	2	3	4	4	5	6	7	-
	28	1	1	1	1	2	2	2	3	4	5	6	7	-	-
	32	1	1	1	2	2	2	3	3	4	5	6	-	-	-
	36	1	1	1	2	2	2	3	4	5	6	7	-	-	-

1 Prescriptive limits are based on assumptions in Table 3.4.

2 Tabulated uplift connection requirements assume a roof and ceiling assembly dead load of 9 psf (0.60 x 15 psf = 9 psf). If a ceiling assembly is not present or if the ceiling assembly is not connected to the roof assembly, the tabulated number of nails shall be increased by 1 nail at each end of the strap.

3 Minimum ASTM A653 Grade 33 steel strap.

4 For jack rafter uplift connections, use a roof span equal to twice the jack rafter length. The jack rafter length includes the overhang length and the jack span.

Copyright © American Wood Council. Downloaded/printed pursuant to License Agreement. No reproduction or transfer authorized.
AMERICAN WOOD COUNCIL

Table A-3.4 Uplift Strap Connection Requirements (Roof-to-Wall, Wall-to-Wall, and Wall-to-Foundation) — Exposure C

(Prescriptive Alternative to Table 3.4)

Dead Load Assumptions: Roof/Ceiling Assembly DL = 15 psf

Wind Speed 3-second gust (mph) (See Figure 1.1)		90	95	100	105	110	115	120	130	140	150	160	170	180	195
Framing Spacing (in.)	**Roof Span (ft.)**	**Number of 8d Common Nails or 10d Box Nails in Each End of 1-1/4" x 20 gage Strap[1,2,3]**													
12	**12**	1	1	1	1	1	1	1	2	2	2	3	3	3	4
	16	1	1	1	1	1	2	2	2	2	3	3	4	4	5
	20	1	1	1	1	2	2	2	2	3	3	4	4	5	6
	24	1	1	1	1	2	2	2	3	3	4	4	5	5	6
	28	1	1	1	2	2	2	2	3	3	4	5	5	6	7
	32	1	1	1	2	2	2	2	3	4	4	5	6	7	-
	36	1	1	2	2	2	2	3	3	4	5	6	6	7	-
16	**12**	1	1	1	1	1	2	2	2	3	3	3	4	4	5
	16	1	1	1	1	2	2	2	3	3	4	4	5	5	6
	20	1	1	1	2	2	2	2	3	3	4	5	5	6	7
	24	1	1	2	2	2	2	3	3	4	5	5	6	7	-
	28	1	1	2	2	2	3	3	4	4	5	6	7	-	-
	32	1	2	2	2	2	3	3	4	5	6	7	-	-	-
	36	1	2	2	2	3	3	3	4	5	6	7	-	-	-
19.2	**12**	1	1	1	1	2	2	2	3	3	4	4	5	5	6
	16	1	1	1	2	2	2	2	3	4	4	5	6	6	-
	20	1	1	2	2	2	2	3	3	4	5	6	6	7	-
	24	1	1	2	2	2	3	3	4	5	5	6	7	-	-
	28	1	2	2	2	3	3	3	4	5	6	7	-	-	-
	32	1	2	2	2	3	3	4	5	6	7	-	-	-	-
	36	1	2	2	3	3	4	4	5	6	7	-	-	-	-
24	**12**	1	1	2	2	2	2	2	3	4	4	5	6	6	-
	16	1	1	2	2	2	3	3	4	4	5	6	7	-	-
	20	1	2	2	2	3	3	3	4	5	6	7	-	-	-
	24	1	2	2	2	3	3	4	5	6	7	-	-	-	-
	28	1	2	2	3	3	4	4	5	6	-	-	-	-	-
	32	2	2	2	3	3	4	4	6	7	-	-	-	-	-
	36	2	2	3	3	4	4	5	6	-	-	-	-	-	-

1 Prescriptive limits are based on assumptions in Table 3.4.

2 Tabulated uplift connection requirements assume a roof and ceiling assembly dead load of 9 psf (0.60 x 15 psf = 9 psf). If a ceiling assembly is not present or if the ceiling assembly is not connected to the roof assembly, the tabulated number of nails shall be increased by 1 nail at each end of the strap.

3 Minimum ASTM A653 Grade 33 steel strap.

4 For jack rafter uplift connections, use a roof span equal to twice the jack rafter length. The jack rafter length includes the overhang length and the jack span.

Copyright © American Wood Council. Downloaded/printed pursuant to License Agreement. No reproduction or transfer authorized.
AMERICAN WOOD COUNCIL

Table A-3.6 Ridge Tension Strap Connection Requirements for Wind

Exposure B

(Prescriptive Alternative to Table 3.6)

Dead Load Assumptions: Roof Assembly DL = 10 psf

Wind Speed 3-second gust (mph) (See Figure 1.1)		90	95	100	105	110	115	120	130	140	150	160	170	180	195
Roof Pitch	Roof Span (ft)	Number of 8d Common Nails or 10d Box Nails in each end of 1-1/4" Strap[1,2,3,4,5,6,7]													
3:12	12	1	1	1	1	1	1	1	2	2	2	2	3	3	4
	16	1	1	1	1	1	1	2	2	2	3	3	4	4	5
	20	1	1	1	1	2	2	2	2	3	3	4	4	5	6
	24	1	1	1	2	2	2	2	3	3	4	4	5	6	7
	28	1	1	1	2	2	2	2	3	4	4	5	6	7	-
	32	1	1	2	2	2	2	3	3	4	5	6	7	-	-
	36	1	1	2	2	2	3	3	4	5	6	6	-	-	-
4:12	12	1	1	1	1	1	1	1	1	2	2	2	2	3	3
	16	1	1	1	1	1	1	1	2	2	2	3	3	3	4
	20	1	1	1	1	1	2	2	2	2	3	3	4	4	5
	24	1	1	1	1	2	2	2	2	3	3	4	4	5	6
	28	1	1	1	2	2	2	2	3	3	4	4	5	6	7
	32	1	1	1	2	2	2	2	3	4	4	5	6	6	-
	36	1	1	2	2	2	2	3	3	4	5	5	6	7	-
5:12	12	1	1	1	1	1	1	1	1	1	2	2	2	2	3
	16	1	1	1	1	1	1	1	1	2	2	2	2	3	3
	20	1	1	1	1	1	1	1	2	2	2	3	3	3	4
	24	1	1	1	1	1	1	2	2	2	3	3	3	4	5
	28	1	1	1	1	1	2	2	2	3	3	3	4	4	5
	32	1	1	1	1	2	2	2	2	3	3	4	4	5	6
	36	1	1	1	2	2	2	2	3	3	4	4	5	6	7
6:12	12	1	1	1	1	1	1	1	1	1	1	2	2	2	2
	16	1	1	1	1	1	1	1	1	2	2	2	2	3	3
	20	1	1	1	1	1	1	1	2	2	2	2	3	3	4
	24	1	1	1	1	1	1	2	2	2	2	3	3	4	4
	28	1	1	1	1	1	2	2	2	2	3	3	4	4	5
	32	1	1	1	1	2	2	2	2	3	3	4	4	5	5
	36	1	1	1	1	2	2	2	2	3	3	4	4	5	6
7:12-12:12	12	1	1	1	1	1	1	1	1	1	1	2	2	2	2
	16	1	1	1	1	1	1	1	1	2	2	2	2	2	3
	20	1	1	1	1	1	1	1	2	2	2	2	3	3	3
	24	1	1	1	1	1	1	2	2	2	2	3	3	3	4
	28	1	1	1	1	1	2	2	2	2	3	3	3	4	4
	32	1	1	1	1	2	2	2	2	3	3	3	4	4	5
	36	1	1	1	2	2	2	2	2	3	3	4	4	5	6

1 Tabulated connection requirements shall be permitted to be multiplied by 0.70 for framing not located within 8 feet of building corners.

2 Tabulated connection requirements are based on total uplift minus the roof assembly dead load of 6 psf (0.6 x 10 psf = 6 psf).

3 Tabulated connection requirements are based on a 12 inch ridge strap spacing, for different ridge strap spacing, multiply the tabulated values by the appropriate multiplier below:

Ridge Strap Spacing (in.)	12	16	19.2	24	48
Multiplier	1.00	1.33	1.60	2.00	4.00

When the tabulated connection requirements are adjusted for the ridge strap spacing and the number of required nails exceeds 7, Table A-3.6 does not apply. Use loads from Table 3.6.

4 When the tabulated number of nails required in each end of the strap is equal to 1 and the framing is attached in accordance with Table 3.1, the ridge strap and additional nailing is not required.

5 When a collar tie is used in lieu of a ridge strap, the number of 10d common nails required in each end of the collar tie need not exceed the tabulated number of 8d common nails in a steel strap, or the number of 12d box nails in each end of the collar tie need not exceed the tabulated number of 10d box nails in a steel strap.

6 1-1/4" 20 gage ridge strap shall be of ASTM A653 grade 33 steel or equivalent.

7 For jack rafter uplift connections, use a roof span equal to twice the jack rafter length. The jack rafter length includes the overhang length and the jack span.

Copyright © American Wood Council. Downloaded/printed pursuant to License Agreement. No reproduction or transfer authorized.

Table A-3.6 Ridge Tension Strap Connection Requirements for Wind — Exposure C

(Prescriptive Alternative to Table 3.6)

Dead Load Assumptions: Roof Assembly DL = 10 psf

Wind Speed 3-second gust (mph) (See Figure 1.1)		90	95	100	105	110	115	120	130	140	150	160	170	180	195
Roof Pitch	**Roof Span (ft)**	**Number of 8d Common Nails or 10d Box Nails in each end of 1-1/4" Strap[1,2,3,4,5,6,7]**													
3:12	12	1	1	1	1	2	2	2	2	3	3	3	4	4	5
	16	1	1	2	2	2	2	2	3	3	4	4	5	6	7
	20	1	2	2	2	2	3	3	3	4	5	5	6	7	-
	24	2	2	2	2	3	3	3	4	5	6	6	7	-	-
	28	2	2	2	3	3	3	4	5	5	6	-	-	-	-
	32	2	2	3	3	3	4	4	5	6	7	-	-	-	-
	36	2	3	3	3	4	4	5	6	7	-	-	-	-	-
4:12	12	1	1	1	1	1	2	2	2	2	3	3	3	4	4
	16	1	1	1	2	2	2	2	2	3	3	4	4	5	6
	20	1	1	2	2	2	2	2	3	3	4	5	5	6	7
	24	1	2	2	2	2	3	3	3	4	5	5	6	7	-
	28	2	2	2	2	3	3	3	4	5	5	6	7	-	-
	32	2	2	2	3	3	3	4	4	5	6	7	-	-	-
	36	2	2	3	3	3	4	4	5	6	7	-	-	-	-
5:12	12	1	1	1	1	1	1	1	2	2	2	2	3	3	3
	16	1	1	1	1	1	2	2	2	2	3	3	3	4	4
	20	1	1	1	2	2	2	2	2	3	3	4	4	5	5
	24	1	1	2	2	2	2	2	3	3	4	4	5	5	6
	28	1	2	2	2	2	2	3	3	4	4	5	6	6	-
	32	1	2	2	2	2	3	3	4	4	5	6	6	7	-
	36	2	2	2	2	3	3	3	4	5	5	6	7	-	-
6:12	12	1	1	1	1	1	1	1	2	2	2	2	2	3	3
	16	1	1	1	1	1	1	2	2	2	2	3	3	3	4
	20	1	1	1	1	2	2	2	2	3	3	3	4	4	5
	24	1	1	1	2	2	2	2	3	3	3	4	4	5	6
	28	1	1	2	2	2	2	2	3	3	4	4	5	6	7
	32	1	2	2	2	2	2	3	3	4	4	5	6	6	-
	36	2	2	2	2	2	3	3	4	4	5	6	6	7	-
7:12-12:12	12	1	1	1	1	1	1	1	1	2	2	2	2	3	3
	16	1	1	1	1	1	1	2	2	2	2	3	3	3	4
	20	1	1	1	1	2	2	2	2	2	3	3	4	4	5
	24	1	1	1	2	2	2	2	2	3	3	4	4	5	5
	28	1	1	2	2	2	2	2	3	3	4	4	5	5	6
	32	1	2	2	2	2	2	3	3	4	4	5	5	6	7
	36	2	2	2	2	2	3	3	3	4	5	5	6	7	-

1 Tabulated connection requirements shall be permitted to be multiplied by 0.70 for framing not located within 8 feet of building corners.

2 Tabulated connection requirements are based on total uplift minus the roof assembly dead load of 6 psf (0.6 x 10 psf = 6 psf).

3 Tabulated connection requirements are based on a 12 inch ridge strap spacing, for different ridge strap spacing, multiply the tabulated values by the appropriate multiplier below:

Ridge Strap Spacing (in.)	12	16	19.2	24	48
Multiplier	1.00	1.33	1.60	2.00	4.00

When the tabulated connection requirements are adjusted for the ridge strap spacing and the number of required nails exceeds 7, Table A-3.6 does not apply. Use loads from Table 3.6.

4 When the tabulated number of nails required in each end of the strap is equal to 1 and the framing is attached in accordance with Table 3.1, the ridge strap and additional nailing is not required.

5 When a collar tie is used in lieu of a ridge strap, the number of 10d common nails required in each end of the collar tie need not exceed the tabulated number of 8d common nails in a steel strap, or the number of 12d box nails in each end of the collar tie need not exceed the tabulated number of 10d box nails in a steel strap.

6 1-1/4" 20 gage ridge strap shall be of ASTM A653 grade 33 steel or equivalent.

7 For jack rafter uplift connections, use a roof span equal to twice the jack rafter length. The jack rafter length includes the overhang length and the jack span.

Copyright © American Wood Council. Downloaded/printed pursuant to License Agreement. No reproduction or transfer authorized.

Copyright © American Wood Council. Downloaded/printed pursuant to License Agreement. No reproduction or transfer authorized.
AMERICAN WOOD COUNCIL

SUPPLEMENT

S

Tables

S-1 Maximum Spans and Allowable Total Uniform Loads for Floor Sheathing 338

S-2A Maximum Spans and Allowable Total Uniform Loads (Bending and Shear) for Roof Sheathing for Normal Duration Loads 338

S-2B Maximum Spans and Allowable Total Uniform Loads (Deflection) for Roof Sheathing for Normal Duration Loads 339

S-3 ASD Unit Shear Capacity for Horizontal Diaphragm Assemblies Sheathed with Gypsum Wallboard 339

Copyright © American Wood Council. Downloaded/printed pursuant to License Agreement. No reproduction or transfer authorized.
AMERICAN WOOD COUNCIL

Table S-1 Maximum Spans and Allowable Total Uniform Loads for Floor Sheathing

Sheathing Type	Span Rating or Grade	Minimum Panel Performance Category	Panels 24 inches or Wider Continuous Over 2 or More Spans with Long Dimension Perpendicular to Supports	
			Maximum Floor Joist Spacing (in.)	Allowable Total Uniform Loads (psf)
Wood Structural Panels (Sheathing Grades, C-C, C-D, OSB)	**24/16**	**7/16**	16	110
	32/16	**15/32**	16	110
	40/20	**19/32**	19.2	110
	48/24	**23/32**	24	110
Wood Structural Panels (Single Floor Grades, Underlayment C-C Plugged, OSB)	**16 o.c.**	**19/32**	16	110
	20 o.c.	**19/32**	19.2	110
	24 o.c.	**23/32**	24	110
	32 o.c.	**7/8**	24	195
	48 o.c.	**1-3/32**	24	300
Lumber Board Sheathing	**#4 Common or Utility**	**5/8**	16	40
		3/4	24	40

Table S-2A Maximum Spans and Allowable Total Uniform Loads (Bending and Shear) for Roof Sheathing for Normal Duration Loads

Sheathing Type	Span Rating or Grade	Minimum Panel Performance Category	Panels 24 inches or Wider Continuous Over 2 or More Spans with Long Dimension Perpendicular to Supports				
			Maximum Rafter/ Truss Spacing (in.)	Rafter/Truss Spacing (in.)			
				12	16	19.2	24
				Allowable Total Uniform Loads (psf)			
Wood Structural Panels (Sheathing Grades, C-C, C-D, OSB)[1]	**24/0**	**3/8**	**24**[2]	166	94	65	42
	24/16	**7/16**	**24**	257	144	100	64
	32/16	**15/32**	**24**	246	138	96	62
	40/20	**19/32**	**24**	374	234	162	104
	48/24	**23/32**	**24**	457	331	242	155
Wood Structural Panels (Single Floor Grades, Underlayment C-C Plugged, OSB)[1]	**16 o.c.**	**19/32**	**24**	303	170	118	76
	20 o.c.	**19/32**	**24**	354	198	138	88
	24 o.c.	**23/32**	**24**	457	264	183	118
	32 o.c.	**7/8**	**24**	548	394	274	175
	48 o.c.	**1-3/32**	**24**	704	510	418	317

1 Tabulated values are based on the allowable bending and shear strengths for normal duration of load. For snow loads, tabulated values shall be permitted to be increased by 1.15. For roof live loads, tabulated values shall be permitted to be increased by 1.25.

2 Edge supports (tongue-and groove edges, panel edge clips at midway between supports, lumber blocking, or other) are required. Otherwise, the maximum spacing is limited to 19.2 inches.

Copyright © American Wood Council. Downloaded/printed pursuant to License Agreement. No reproduction or transfer authorized.

Table S-2B Maximum Spans and Allowable Total Uniform Loads (Deflection) for Roof Sheathing for Normal Duration Loads

Sheathing Type	Span Rating or Grade	Minimum Panel Performance Category	Panels 24 inches or Wider Continuous Over 2 or More Spans with Long Dimension Perpendicular to Supports				
			Maximum Rafter/ Truss Spacing (in.)	Rafter/Truss Spacing (in.)			
				12	16	19.2	24
				Allowable Total Uniform Loads (psf)			
Wood Structural Panels (Sheathing Grades, C-C, C-D, OSB)[1]	**24/0**	**3/8**	**24** [2]	402	157	91	49
	24/16	**7/16**	**24**	519	201	115	61
	32/16	**15/32**	**24**	760	292	164	85
	40/20	**19/32**	**24**	1,478	562	312	156
	48/24	**23/32**	**24**	2,620	992	547	270
Wood Structural Panels (Single Floor Grades, Underlayment C-C Plugged, OSB)[1]	**16 o.c.**	**19/32**	**24**	989	378	211	108
	20 o.c.	**19/32**	**24**	1,380	526	292	147
	24 o.c.	**23/32**	**24**	1,968	746	413	205
	32 o.c.	**7/8**	**24**	4,252	1,606	883	433
	48 o.c.	**1-3/32**	**24**	7,515	2,833	1,555	758

1 Tabulated values are based on deflection criteria of L/240 under live loads and L/180 under total loads (assumed 10 psf for dead loads).
2 Edge supports (tongue-and groove edges, panel edge clips at midway between supports, lumber blocking, or other) are required. Otherwise, the maximum spacing is limited to 19.2 inches.

Table S-3 ASD Unit Shear Capacity for Horizontal Diaphragm Assemblies Sheathed with Gypsum Wallboard

Sheathing Material	Material Thickness (in.)	Nail Size	Diaphragm Construction	Nail Spacing (in.)		Recommended ASD Unit Shear Capacity (plf)
				Panel Edges	Intermediate Supports	
Gypsum Wallboard	**1/2**	**5d Cooler Nails or 1-1/4 Drywall Screws**	**Unblocked**	7	10	70 [1]

1 Tabulated shear capacity can be increased to 90 plf when ceiling framing members are spaced not more than 16 inches on center.

Copyright © American Wood Council. Downloaded/printed pursuant to License Agreement. No reproduction or transfer authorized.

Copyright © American Wood Council. Downloaded/printed pursuant to License Agreement. No reproduction or transfer authorized.
AMERICAN WOOD COUNCIL

REFERENCES

References 342

R

Copyright © American Wood Council. Downloaded/printed pursuant to License Agreement. No reproduction or transfer authorized.
AMERICAN WOOD COUNCIL

1. ANSI A208.1-2009, Particleboard Standard, ANSI, New York, NY, 2009.
2. ANSI/AWC SDPWS-2015, Special Design Provisions for Wind and Seismic (SDPWS), American Wood Council, Leesburg, VA, 2015.
3. ANSI/AWC NDS-2018, National Design Specification (NDS) for Wood Construction, American Wood Council, Leesburg, VA, 2017.
4. ANSI A190.1-2017, Standard for Wood Products - Structural Glued Laminated Timber, APA-The Engineered Wood Association, Tacoma, WA 2017.
5. ANSI/ASME Standard B18.2.1-2012, Square, Hex, Heavy Hex, and Askew Head Bolts and Hex, Heavy Hex, Hex Flange, Lobed Head, and Lag Screws (Inch Series), American Society of Mechanical Engineers, New York, NY, 2012.
6. ANSI/ASME Standard B18.6.1-1981 (Reaffirmed 1997), Wood Screws (Inch Series), American Society of Mechanical Engineers, New York, NY, 1982.
7. ANSI/CPA A135.6 Hardboard Siding, Composite Panel Association, Gaithersburg, MD, 2012.
8. ANSI/TPI 1-2014 National Design Standard for Metal Plate Connected Wood Truss Construction, Truss Plate Institute, 2014.
9. ASCE/SEI Standard 7-16 Minimum Design Loads and Associated Criteria for Buildings and Other Structures, American Society of Civil Engineers, Reston, VA, 2016.
10. ASTM Standard A653-10, Standard Specification for Steel Sheet, ZincCoated (Galvanized) or ZincIron AlloyCoated (Galvannealed) by the HotDip Process, ASTM, West Conshohocken, PA, 2010.
11. ASTM Standard C1396/C1396M-13, Standard Specification for Gypsum Board, ASTM, West Conshohocken, PA, 2013.
12. ASTM Standard C208-12, Standard Specification for Cellulosic Fiber Insulating Board, ASTM, West Conshohocken, PA, 2012.
13. ASTM Standard D 5055-16, Standard Specification for Establishing and Monitoring Structural Capacities of Prefabricated Wood I-Joists, ASTM, West Conshohocken, PA, 2016.
14. ASTM Standard D 5456-14b, Standard Specification for Evaluation of Structural Composite Lumber Products, ASTM, West Conshohocken, PA, 2014.
15. ASTM Standard F 1667-17, Standard Specification for Driven Fasteners: Nails, Spikes, and Staples, ASTM, West Conshohocken, PA, 2017.
16. American Softwood Lumber Standard, Voluntary Product Standard PS 20-15, National Institute of Standards and Technology, U.S. Department of Commerce, 2015.
17. International Residential Code, International Code Council, Washington, DC, 2018.
18. PS1-09, Structural Plywood, United States Department of Commerce, National Institute of Standards and Technology, Gaithersburg, MD, 2009.
19. PS2-10, Performance Standard for Wood-Based Structural-Use Panels, United States Department of Commerce, National Institute of Standards and Technology, Gaithersburg, MD, 2011.
20. SBCA/TPI Building Component Safety Information (BCSI) – Guide to Good Practice for Handling, Installing, Restraining & Bracing of Metal Plate Connected Wood Trusses, 2006 Edition, Structural Building Components Association, Madison, WI, 2011.

Copyright © American Wood Council. Downloaded/printed pursuant to License Agreement. No reproduction or transfer authorized.

American Wood Council

AWC Mission Statement

To increase the use of wood by assuring the broad regulatory acceptance of wood products, developing design tools and guidelines for wood construction, and influencing the development of public policies affecting the use and manufacture of wood products.

American Wood Council
222 Catoctin Circle, SE, Suite 201
Leesburg, VA 20175
www.awc.org
info@awc.org

ISBN 978-1-940383-44-6

9 781940 383446

11-17