WoodWorks™
WOOD PRODUCTS COUNCIL

Practical, Code-Compliant Detailing for Mid-Rise Wood Structures

Detailing Considerations for Mid Rise Wood Frame Buildings

Archie Landreman
WoodWorks-Wood Products Council

"The Wood Products Council" is a Registered Provider with The American Institute of Architects Continuing Education Systems (AIA/CES), Provider #G516.

Credit(s) earned on completion of this course will be reported to AIA CES for AIA members. Certificates of Completion for both AIA members and non-AIA members are available upon request.

This course is registered with AIA CES for continuing professional education. As such, it does not include content that may be deemed or construed to be an approval or endorsement by the AIA of any material of construction or any method or manner of handling, using, distributing, or dealing in any material or product.

Questions related to specific materials, methods, and services will be addressed at the conclusion of this presentation.

Course Description

With an increase in mid-rise wood-frame buildings, more designers are seeking information on code-compliant and constructible detailing. Many are unsure of the code's requirements for details, specifically at the intersection of rated assemblies and where structure and fire protection meet. This presentation will focus on common detailing issues and areas of misunderstanding—including fire-resistance rating continuity, allowable uses of wood framing in shaft and fire walls, and fire safety principles associated with the intersection of two rated assemblies. Mid-rise wood-frame opportunities and code-specified building sizes will also be reviewed, followed by discussion of detailing code requirements, code compliance, and rationale for approval with an emphasis on constructability and practicality.

Learning Objectives

1. Discuss allowable construction types, occupancies, and building heights and areas for wood-frame mid-rise construction per the International Building Code.
2. Examine a variety of floor-to-exterior wall details for use in wood-frame, Type III construction and discuss code compliance paths and approval rationale for each.
3. Discuss code-permitted shaft wall and fire wall construction materials and fire-resistance requirements, and review common details for each.
4. Consider code provisions for corridor and balcony fire-resistance protection, and identify details that accommodate these requirements while maximizing wood use.

Outline

- Mid-Rise Construction Types & Life Safety Review
- Structural Design & Detailing Considerations
- Shrinkage Considerations & Detailing
- Acoustic Requirements & Detailing
- Fire Resistive Requirements and Detailing

Mid-Rise Construction Types

Materials	Protected Elements	Less Protected Elements	Unprotected Elements
Non-Combustible	IA, IIA	IB	IIB
Combustible	-	-	-
Mixed Systems	IIIA	IIIB	-
Heavy Timber	-	IV	-
Any Materials	VA	-	VB

ICC Building Valuation Data

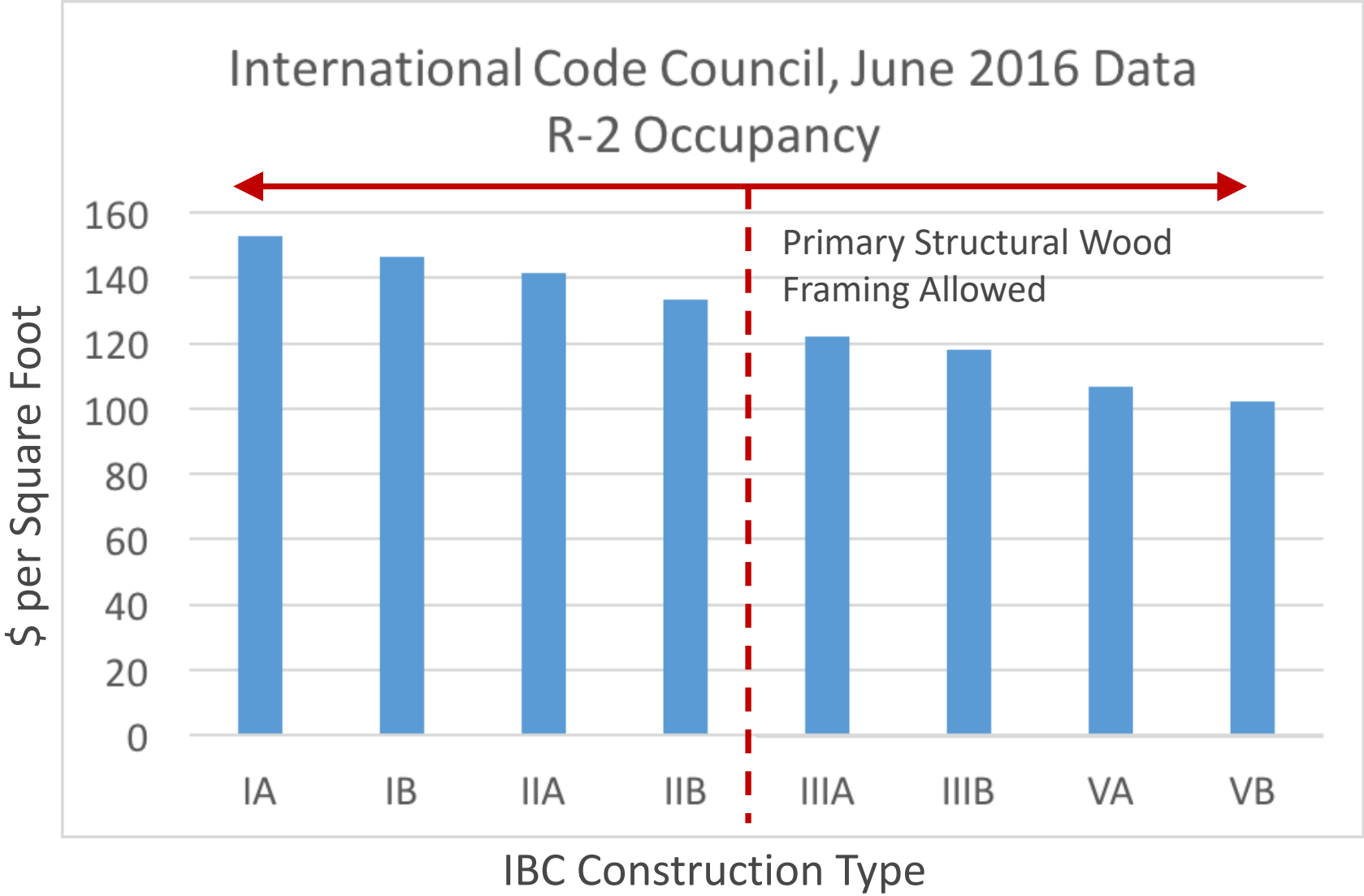

IBC Building Size Limits

Residential (R1, R2, and R4) Occupancies

Construction Type Allowable Limit	IIIA	IIIB	VA	VB
Stories	4	4	3	2
Height (ft)	65	55	50	40
Building Area/Story (ft^2)	24k	16k	12k	7k
Total Building Area* (ft^2)	72k	48k	36k	14k

* Assuming max stories built

IBC 2012 Table 503 Tabular Values

IBC Building Size Limits

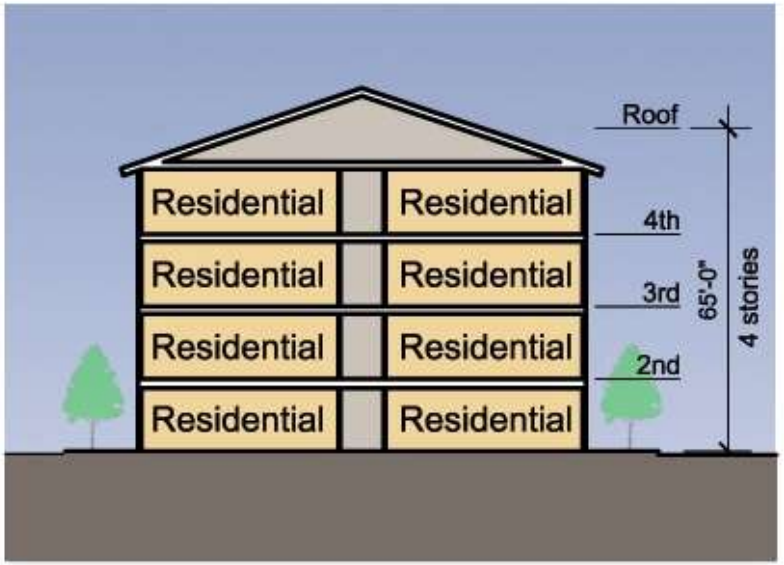

NFPA 13

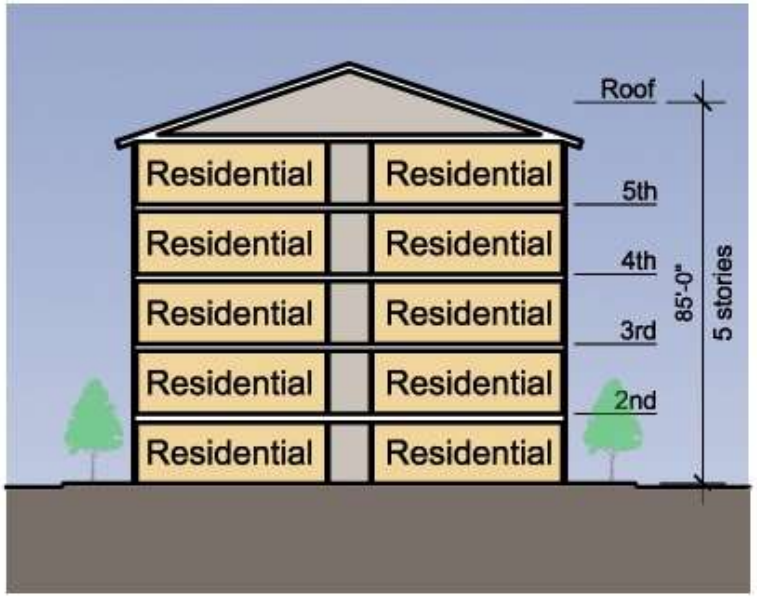

IIIA Tabular Height Limits

Increased Limits

With NFPA 13 Sprinklers:

IBC gives an allowable Heights and Area Increase

IBC Building Size Limits with Sprinkler

Residential (R1, R2, and R4) Occupancies

Type IIIA Construction Allowable Limit	Table 503	NPFA 13	NPFA 13	Frontage **
Stories	4	**5**	**5**	**5**
Height (ft)	65	**85**	**85**	**85**
Building Area/Story (ft^2)	24k	24k	**72k**	**90k**
Total Building Area* (ft^2)	72k	72k	**216k**	**270k**
IBC 2012 Section	503	504.2	506.3	506.2

* Assuming max stories built per IBC 506.4

** Maximum frontage increase possible

Case Study: Stella Apartments

Stella Apartments

Location: Marina Del Ray, CA

244 Apts., 650K sf total (2 bldgs)

Type IIIA and VA construction

Panelized wood framing saved 1-2 months construction time and $200,000

Architect: Design ARC. Los Angeles, CA
Photos: Lawrence Anderson, www.lawrenceanderson.net

Outline

- Mid-Rise Construction Types & Life Safety Review
- Structural Design & Detailing Considerations
- Shrinkage Considerations & Detailing
- Acoustic Requirements & Detailing
- Fire Resistive Requirements and Detailing

Platform Framing

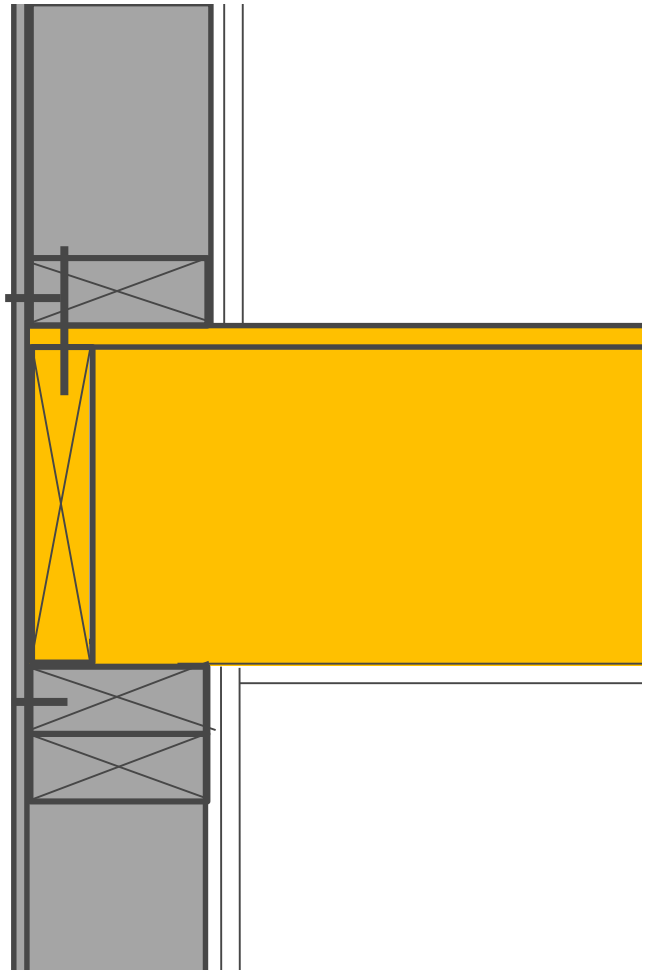

Structural

- Direct bearing/ no add'l hardware
- May require load transfer blocking for concentrated loads from above
- Wall sole plate and floor sheathing crushing may need to be considered

Constructability

- Framing can be completed before drywall and insulation are installed
- Common length studs

Semi-balloon Framing

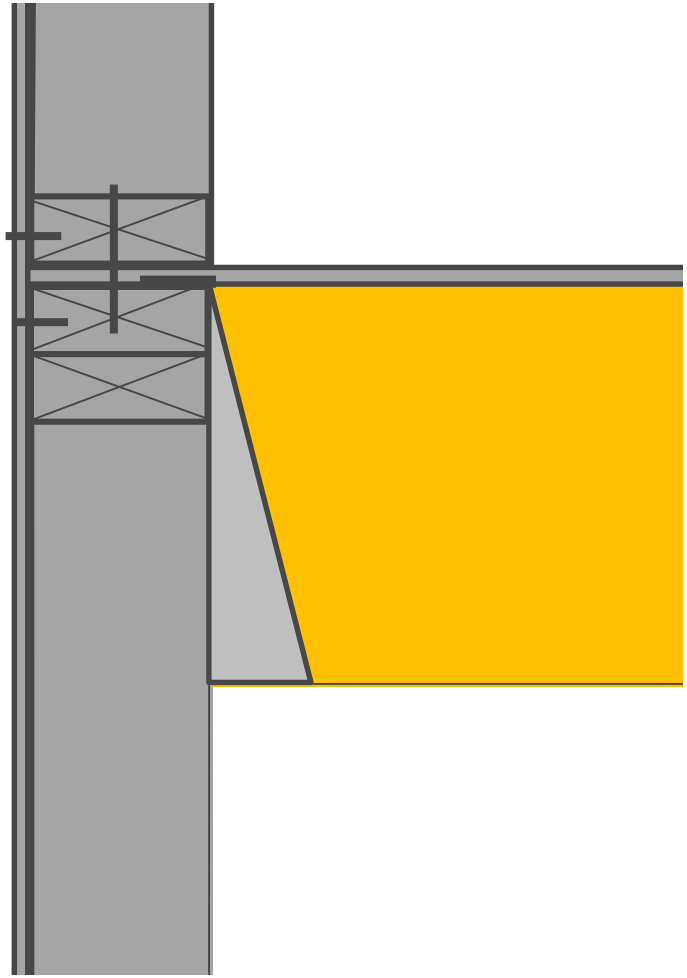

Structural

- Additional hardware/no direct bearing
- No load transfer blocking req'd

Rated Assemblies

- May accommodate continuity in exterior walls in Type III construction

Constructability

- Framing can be completed before drywall and insulation are installed
- Custom length studs
- Can help minimize building shrinkage

Shear Wall Framing Considerations

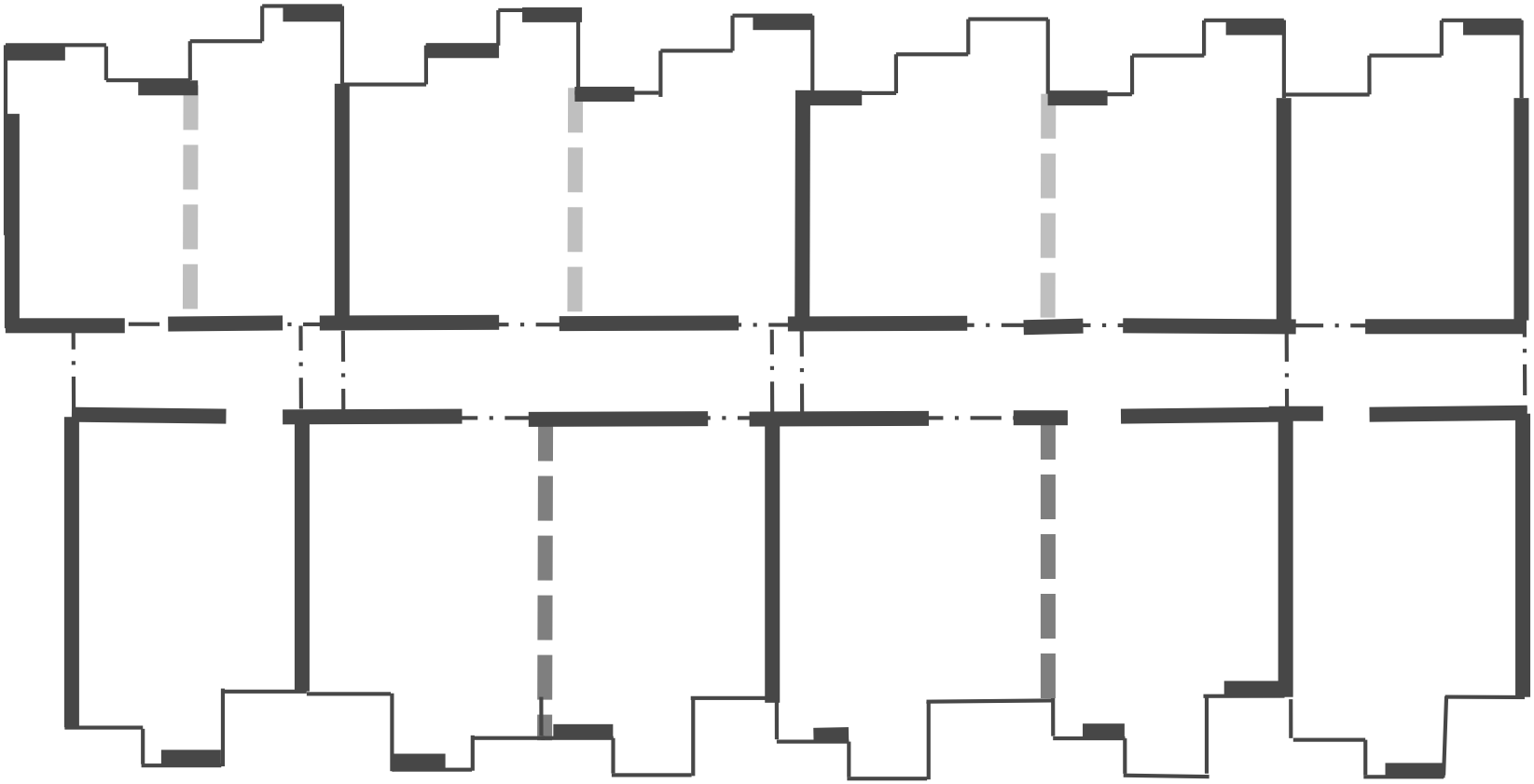

Typical Floor Plan Shear Wall Layout

Indicates wood sheathed shear wall

Shear Wall Framing Considerations

- Typical floor plan results in shorter solid wall sections, offset walls, need for more collectors, struts
- Shorter walls = higher concentrated loads
- Higher concentrated loads = tighter nailing, larger hold downs & end posts, possibly double sided sheathing
- Code requirements for wall height to width ratios must be met
- Accumulated loads further concentrate forces in lower level walls

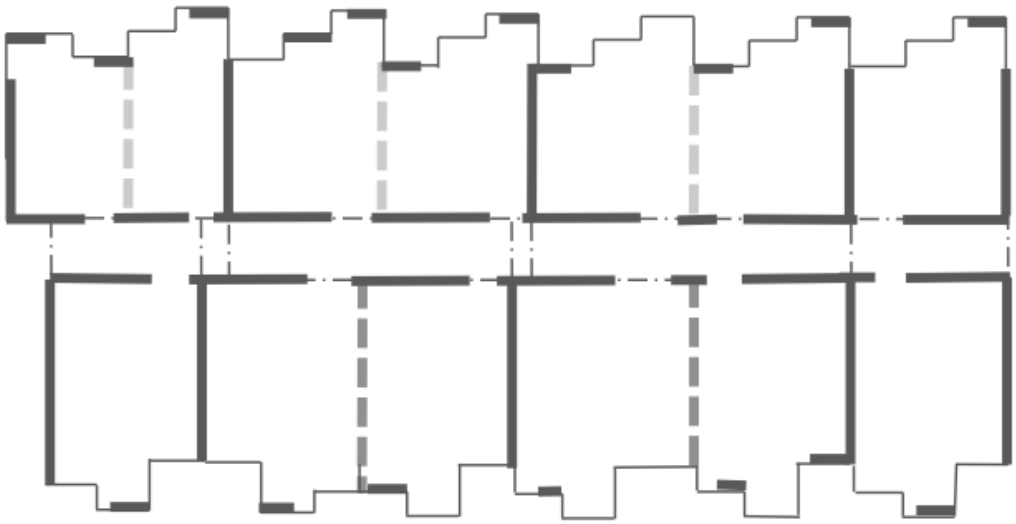

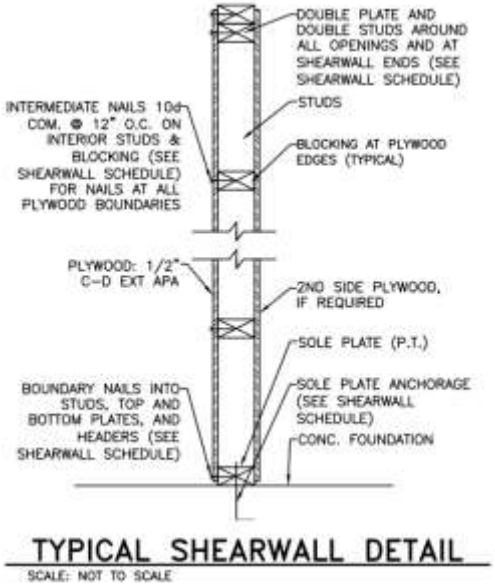

Shear Wall Framing Considerations

- Shear wall components can affect other building features
- End Posts: More wood in wall = less insulation
- Sheathing on interior walls affect wall finishes, acoustics
- Hold downs, end posts, blocking can affect in-wall utilities
- Openings in walls for MEP can affect shear wall strength

Shear Wall Configuration Options

Solid or Segmented Walls

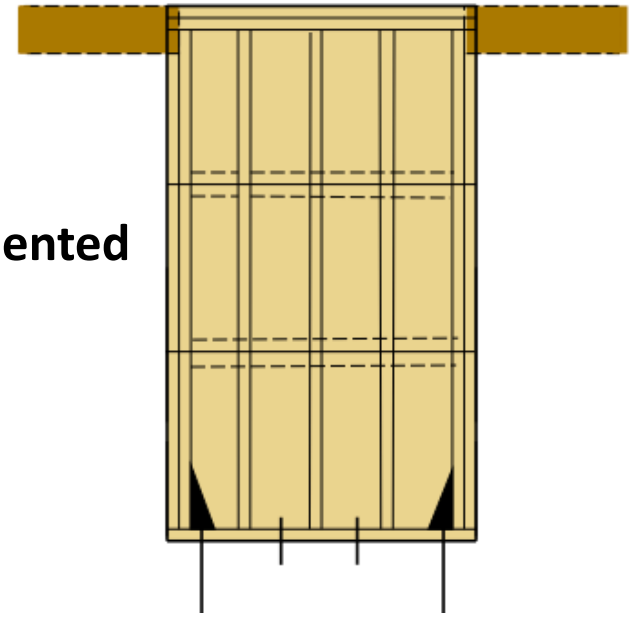

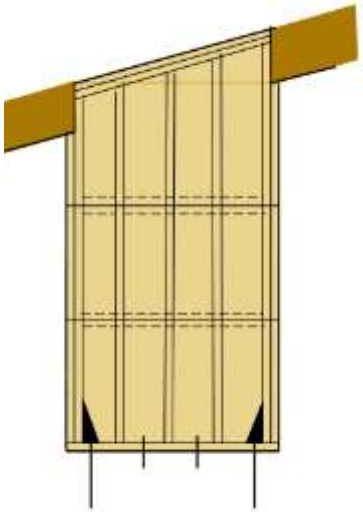

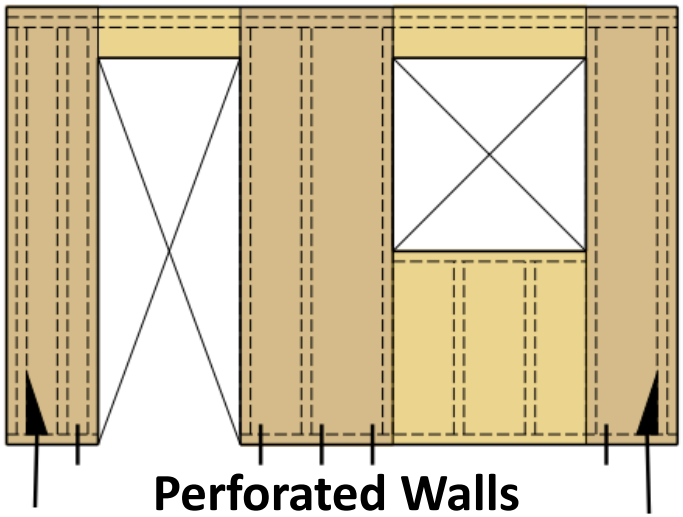

Perforated Walls

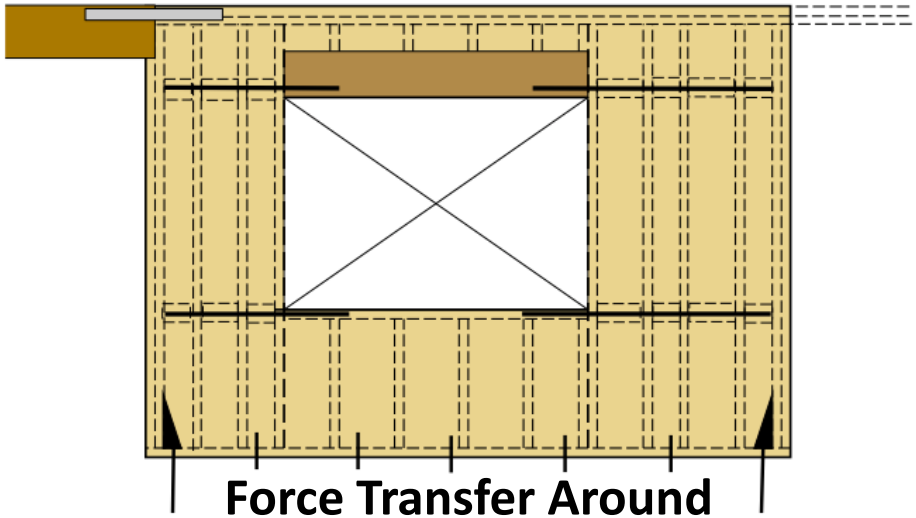

Force Transfer Around Openings Walls

Shear Wall Hold Down Options

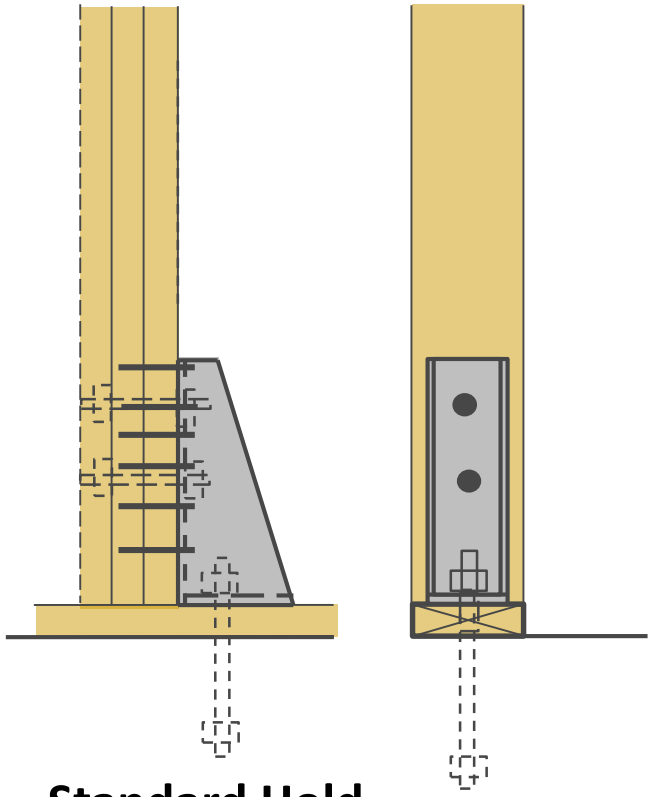

Standard Hold Down Installation

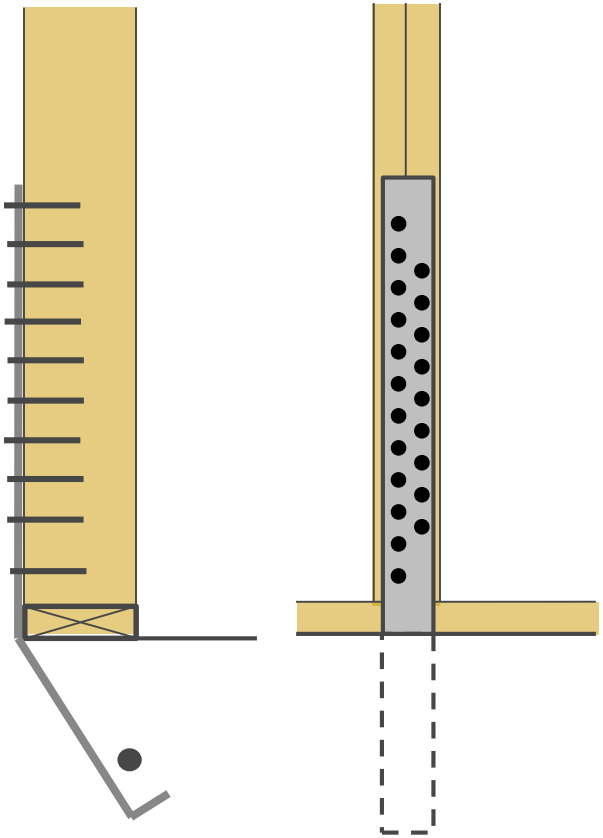

Strap Hold Down Installation

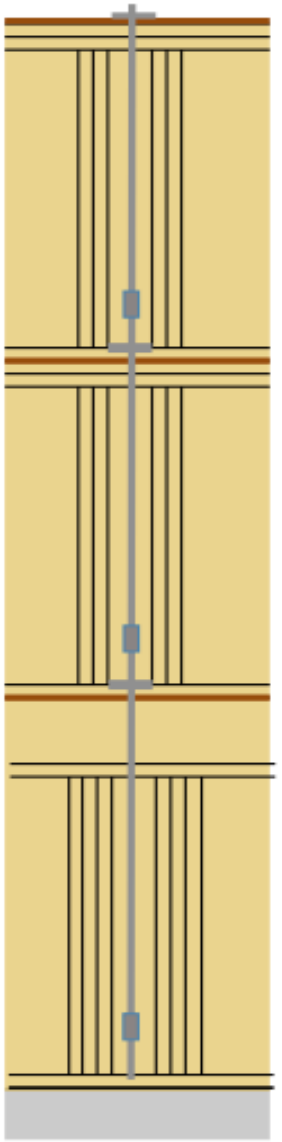

Continuous Rod - Automatic Tensioning Systems

Diaphragm Considerations

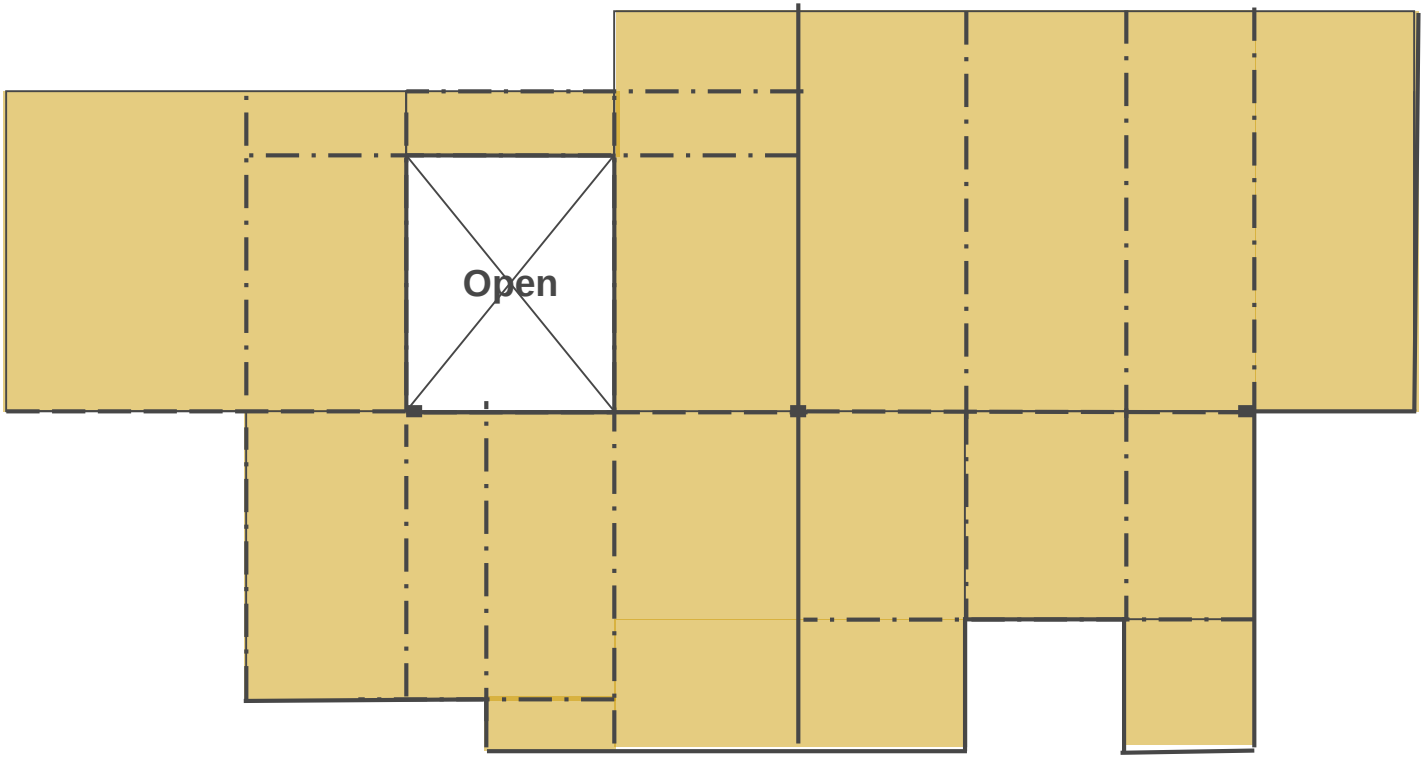

Typical Floor Plan Diaphragm Layout

Diaphragm Considerations

- Typical floor plan results in diaphragm offsets, re-entrant corners, discontinuities, openings
- Diaphragm openings, discontinuities = higher concentrated, localized loads
- Higher concentrated loads = tighter nailing, larger chord & strut loads, may require blocked diaphragm
- Code requirements for diaphragm length to width ratios must be met

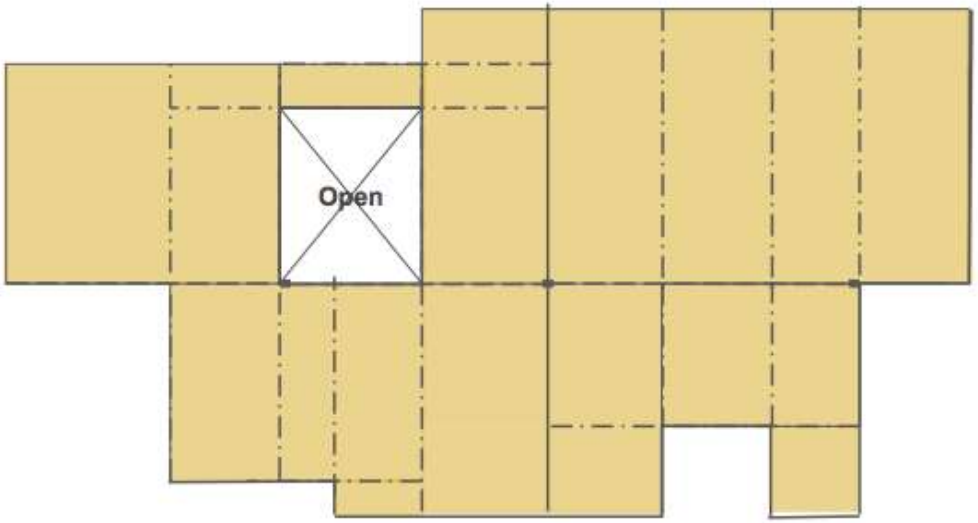

Shear Wall to Podium Slab Interface

- Amplification of seismic forces is required for elements supporting discontinuous walls per ASCE 7-10 12.3.3.3
- Overstrength factor of 3 (may be reduced to 2.5 per footnote g of Table 12.2-1) is required
- Attachment to concrete slab must also conform to ACI 318 Appendix D
- Typically will be transitioning from ASD for wood design to LRFD for concrete design
- Hold down attachments to concrete options: embedded nuts or plates, sleeves through slab, welded studs & reinforcing

PT Sole Plate vs FRT Continuity

In type III construction with FRT studs, what happens where the sole plate is in contact with concrete?

- FRTW is required
- PT wood is required

FRT contains about 10x borate compound found in PT (borate is water soluble)

Can specify a product tested to do both

Outline

- Mid-Rise Construction Types & Life Safety Review
- Structural Design & Detailing Considerations
- Shrinkage Considerations & Detailing
  - Concepts
  - Calculations
  - Recommendations
- Acoustic Requirements & Detailing
- Fire Resistive Requirements and Detailing

IBC 2012 on Shrinkage

2304.3.3 Shrinkage. Wood walls and bearing partitions shall not support more than two floors and a roof unless an analysis satisfactory to the building official shows that shrinkage of the wood framing will not have adverse effects on the structure or any plumbing, electrical or mechanical systems, or other equipment installed therein due to excessive shrinkage or differential movements caused by shrinkage. The analysis shall also show that the roof drainage system and the foregoing systems or equipment will not be adversely affected or, as an alternative, such systems shall be designed to accommodate the differential shrinkage or movements.

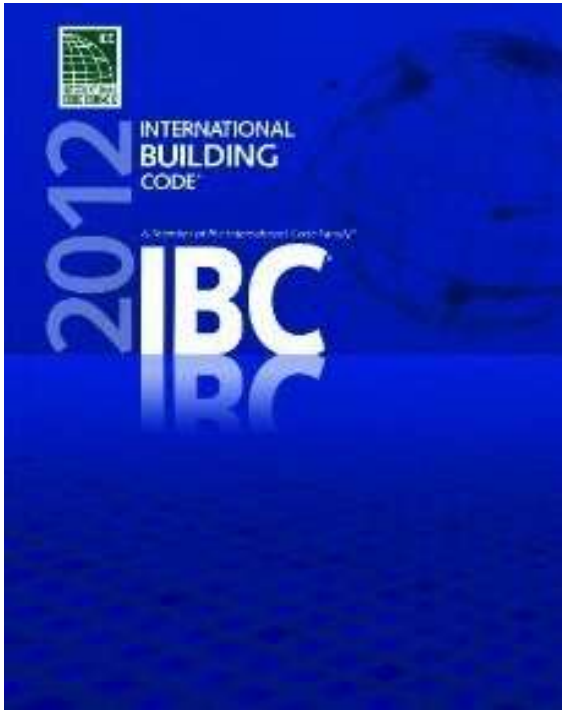

Key Factors Influencing Shrinkage

- Pre-construction moisture content (MC)
- In-service equilibrium moisture content (EMC)
- Cumulative thickness of cross-grain wood contributing to shrinkage

Wood species has relatively little impact since most species used in commercial construction have similar shrinkage properties.

Basic Wood Shrinkage Theory

Moisture changes cause dimensional changes perpendicular to grain

Growing tree is filled with water

As wood dries, it shrinks perp. to grain

Image: Wood Handbook, Wood as an Engineering Material, USDA Forest Service, Forest Products Laboratory, 2010

Basic Wood Shrinkage Theory

Shrinkage in lumber expected <u>ACROSS</u> the grain.

Longitudinal shrinkage is negligible.

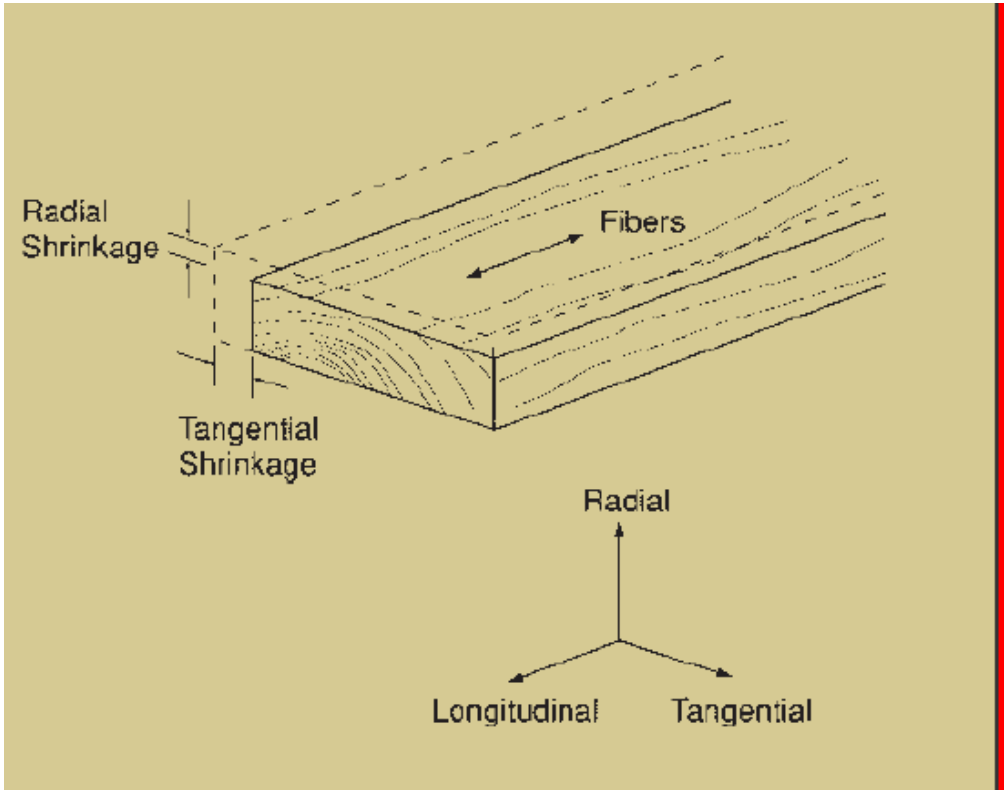

Wider & Thicker --- NOT Taller

Basic Wood Shrinkage Theory

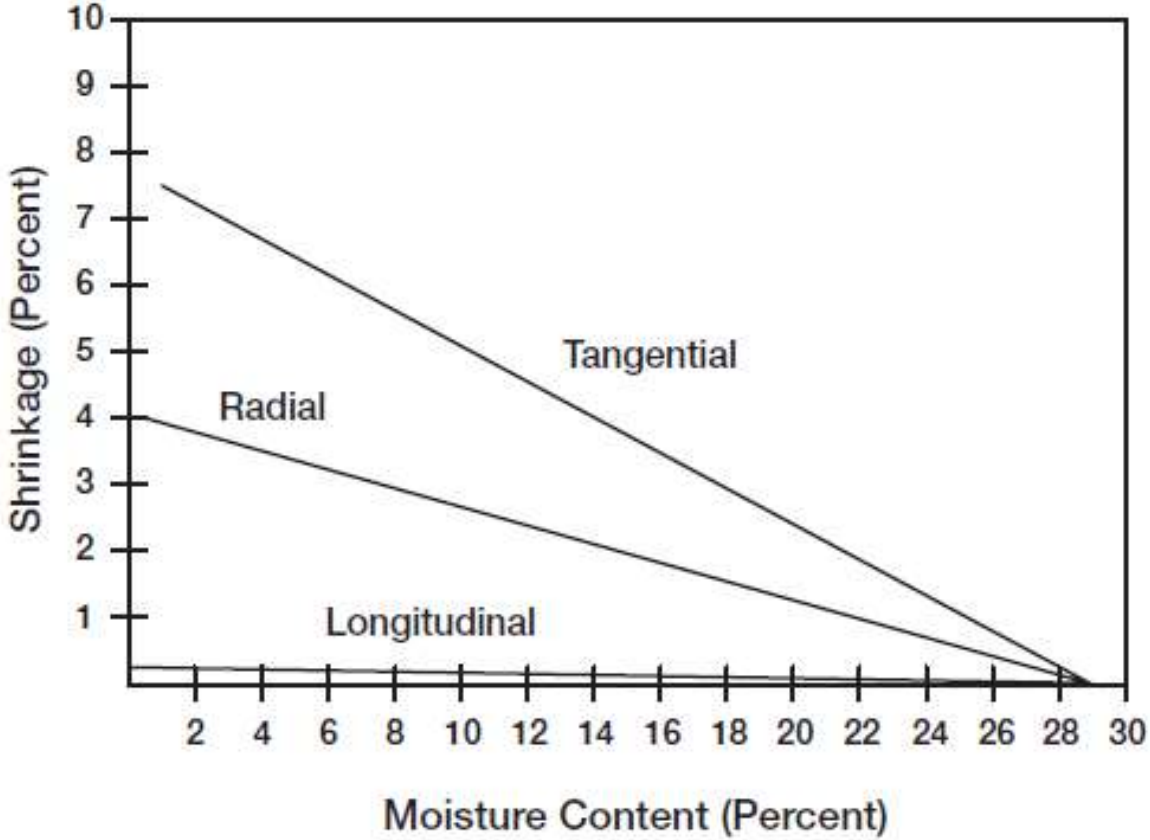

Figure 2. Average shrinkage properties

Zone of Movement

Shrinkage occurs primarily in horizontal members

- Wall plates
- Floor/rim joists

Be aware of cumulative shrinkage.

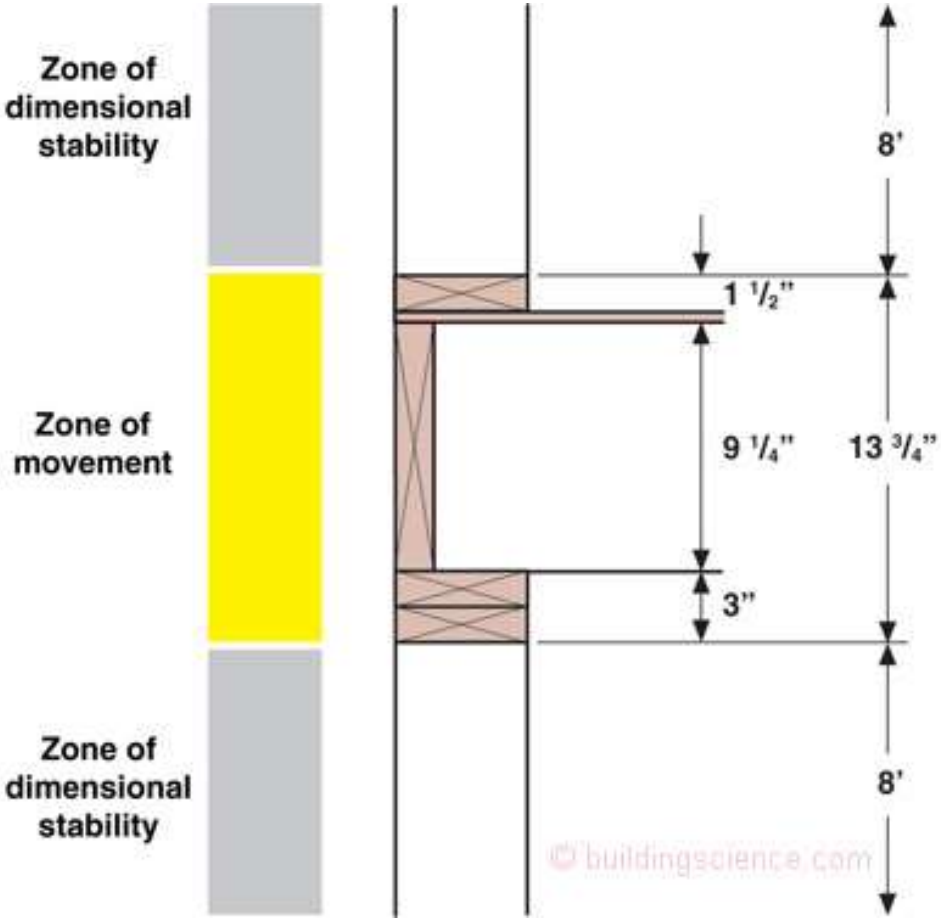

Pre-Construction Moisture Content

Product	Moisture Content
Lumber – S-Dry	19% or less
Lumber – S-Green	Usually over 19%
Panel products (OSB, plywood)	4-8%
I-Joists	4-16%

→ $M_i = 19\%$

→ $M_i = 28\%$

Minimize Construction Moisture Accumulation

1. Minimize storage of material on site where rain and standing water can increase moisture content.
2. Keep unused framing material covered
3. Inspect pre-built wall panels prior to installation for proper material and quality of mechanical fasteners.
4. “Dry-in” the structure as quickly as possible.
5. Immediately remove any standing water from floor framing after rain showers.
6. Ensure that installed lumber MC is lowered to 19% or calculated max MC before installing finishes & insulation

In-service Average EMC in July

Map courtesy of US Forest Products Laboratory

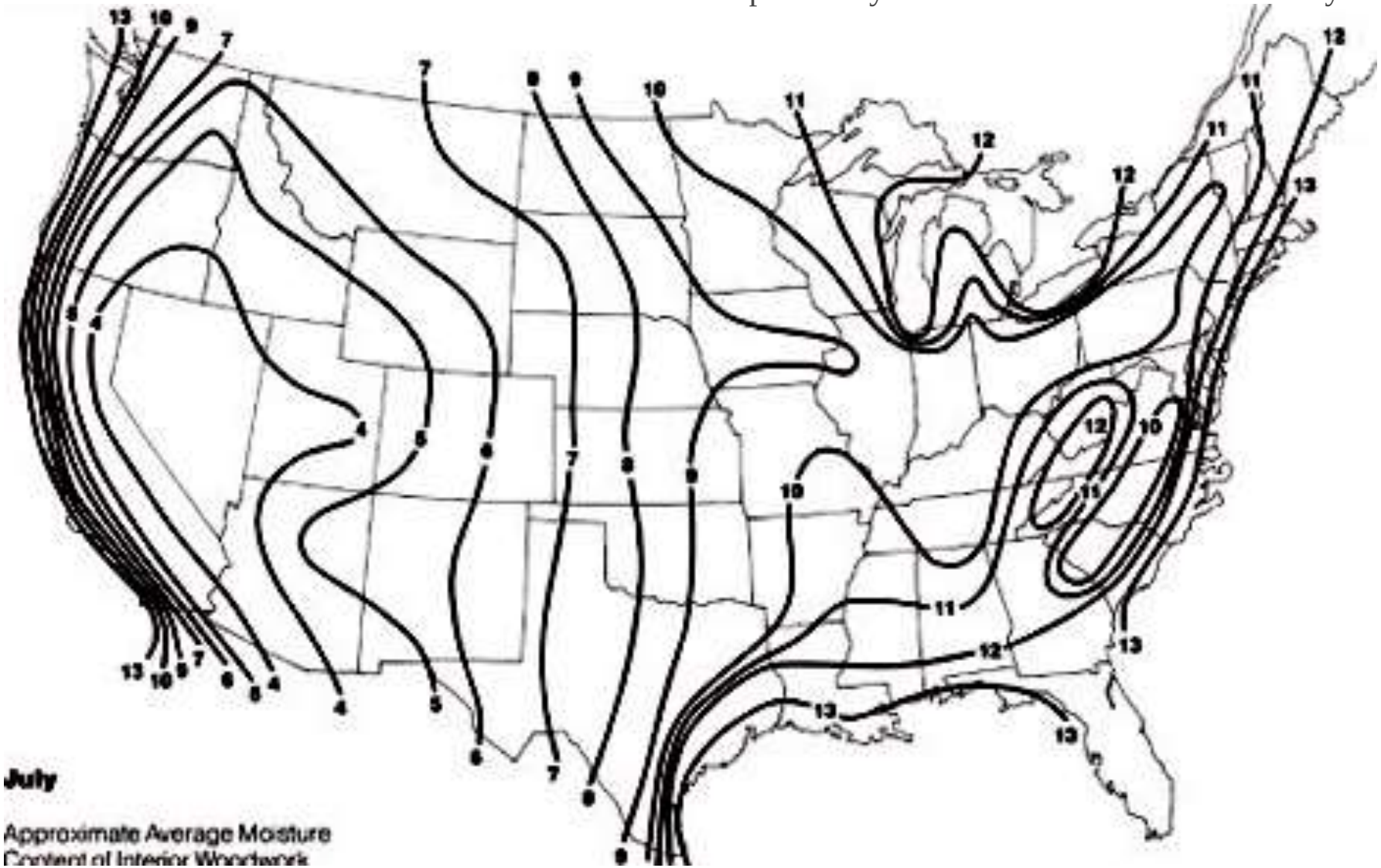

In-service Average EMC in January

Map courtesy of US Forest Products Laboratory

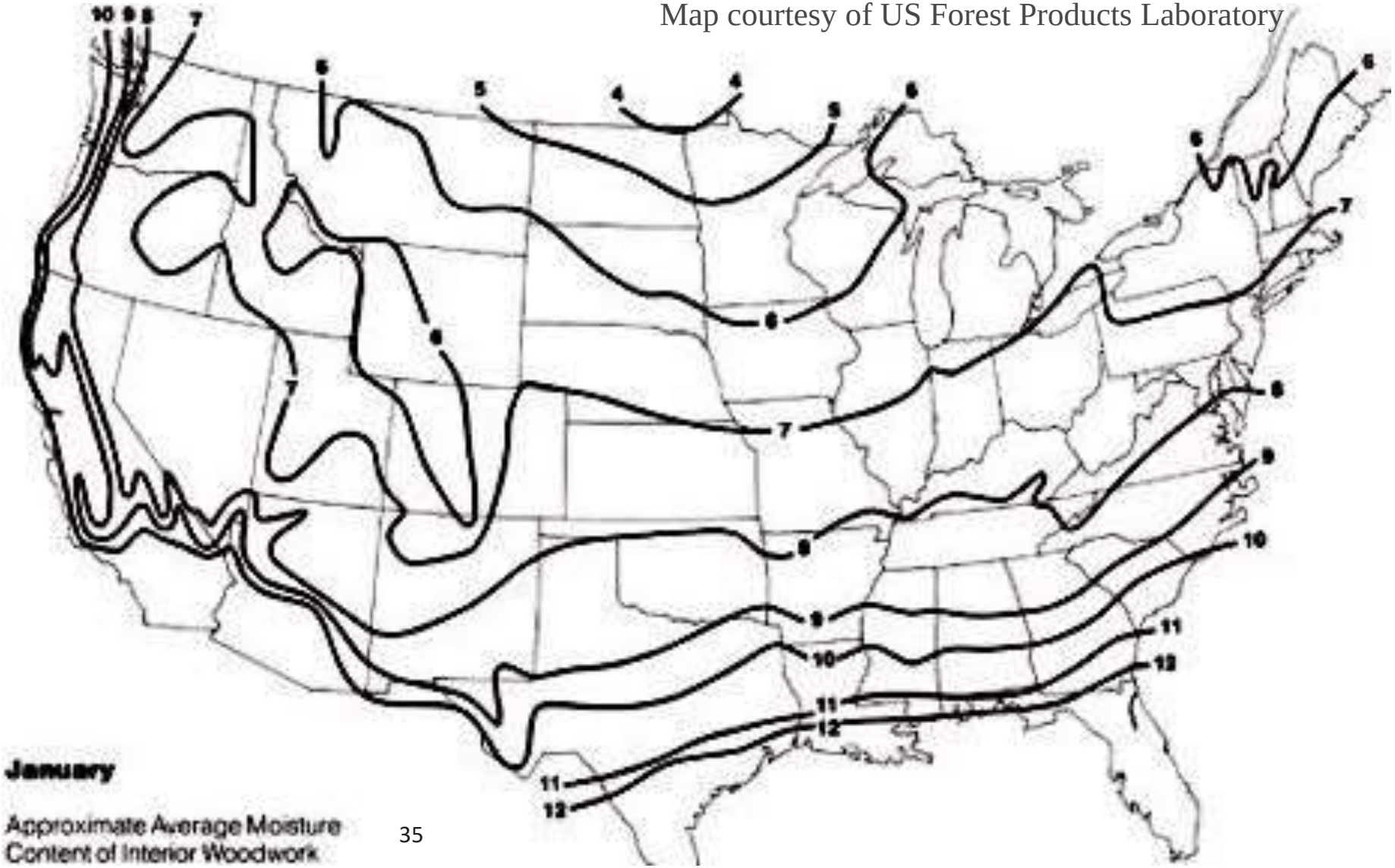

Calculating Shrinkage

For a change in MC **<u>between</u> 6% and 14%** the shrinkage formula is:

$$S = D_i\left[C_T\left(M_F - M_i\right)\right]$$

S = shrinkage (in inches)

D_i = initial dimension (in inches)

C_T / C_R= dimension change coefficient, tangential/radial direction

C_T = 0.00319 for Douglas Fir-Larch

C_T = 0.00323 for Hem-Fir

C_T = 0.00263 for Spruce-Pine-Fir

C_T = 0.00263 for Southern Pine

M_F = final moisture content (percent)

M_i = initial moisture content (percent)

Calculating Shrinkage

For MC **<u>outside</u> the range of 6 to 14%** :

$$S = \frac{D_i\left(M_F - M_i\right)}{\frac{30(100)}{S_T} - 30 + M_i}$$

S = shrinkage (in inches)

D_i = initial dimension (in inches)

S_T /S_R= tangential/radial shrinkage (%) from green to oven dry

M_F = final moisture content (percent)

M_i = initial moisture content (percent)

Calculating Shrinkage – Resources

Wood Handbook: www.fpl.fs.fed.us

- Chapter 13 – C_T, C_R
- Chapter 4 – S_T, S_R

Table 13–5. Dimensional change coefficients (C_R, radial; C_T, tangential) for shrinking or swelling within moisture content limits of 6% to 14%

Species	Dimensional change coefficient[a]		Species	Dimensional change coefficient[a]	
	C_R	C_T		C_R	C_T
			Softwoods		
Baldcypress	0.00130	0.00216	Pine, eastern white	0.00071	0.00212
Cedar, yellow-	0.00095	0.00208	Pine, jack	0.00126	0.00230
Cedar, Atlantic white-	0.00099	0.00187	Pine, loblolly	0.00165	0.00259
Cedar, Eastern Red	0.00106	0.00162	Pine, pond	0.00165	0.00259
Cedar, incense	0.00112	0.00180	Pine, lodgepole	0.00148	0.00234
Cedar, northern white-[b]	0.00101	0.00229	Pine, Jeffrey	0.00148	0.00234
Cedar, Port-Orford-	0.00158	0.00241	Pine, longleaf	0.00176	0.00263
Cedar, western red[b]	0.00111	0.00234	Pine, ponderosa	0.00133	0.00216
Douglas-fir, Coast-type	0.00165	0.00267	Pine, red	0.00130	0.00252
Douglas-fir, Interior north	0.00130	0.00241	Pine, shortleaf	0.00158	0.00271
Douglas-fir, Interior west	0.00165	0.00263	Pine, slash	0.00187	0.00267
Fir, balsam	0.00099	0.00241	Pine, sugar	0.00099	0.00194

Example Shrinkage Calculation

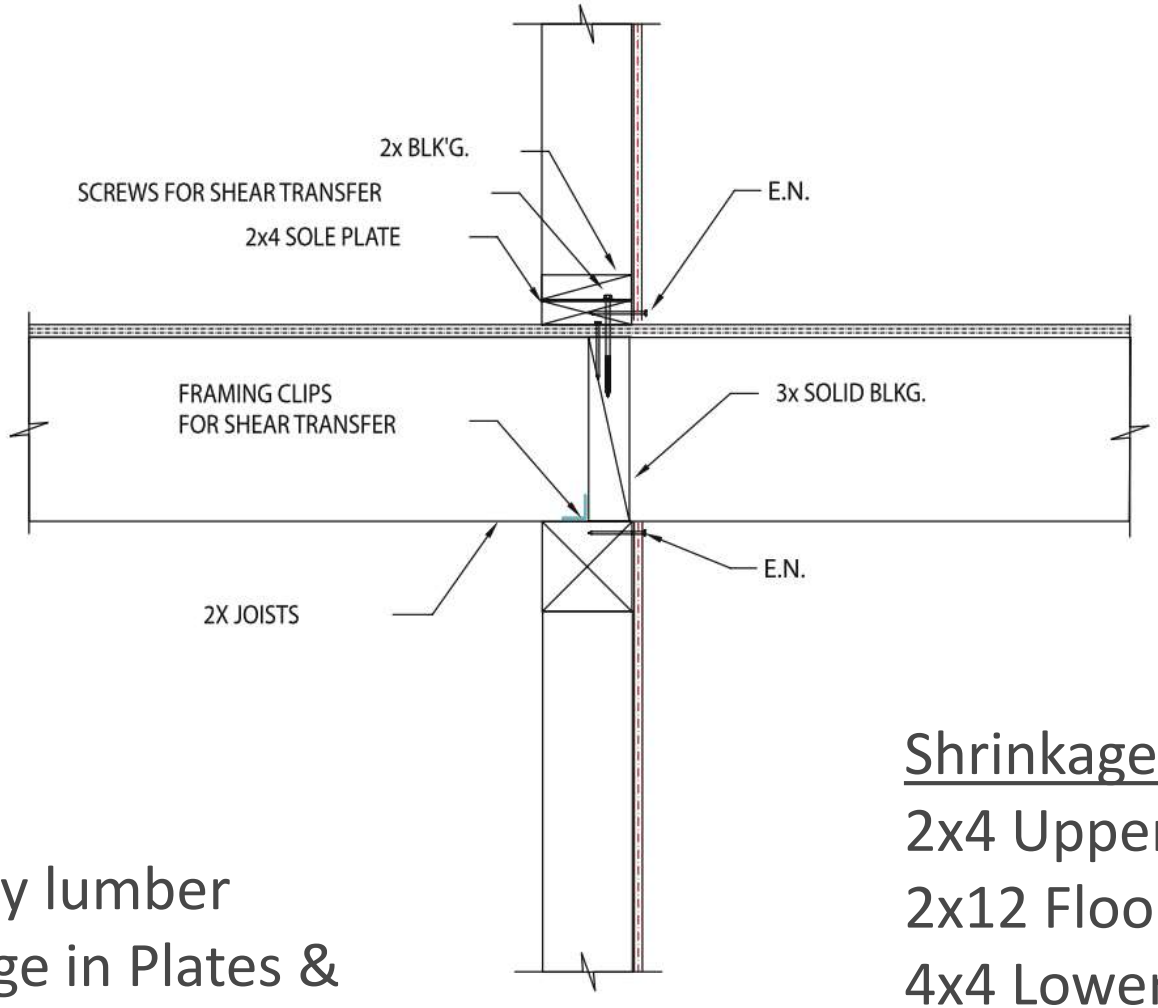

Assume: S-Dry lumber
Find: Shrinkage in Plates & Floor Joist

<u>Shrinkage Zone</u>:
2x4 Upper Plate
2x12 Floor Joist
4x4 Lower Plate
16.25” Total

Example Shrinkage Calculation

Again assuming the initial MC (M_i) is 19 percent and the final MC (M_F) is 12 percent

Our approximated shrinkage is:

For Doug Fir Larch:

$$S = CD_i\left(M_F - M_i\right) = 0.00319 \times 16.25\left(12 - 19\right) = \underline{-0.36 inch}$$

For S-P-F or Southern Pine:

$$S = CD_i\left(M_F - M_i\right) = 0.00263 \times 16.25\left(12 - 19\right) = \underline{-0.3 inch}$$

Minimizing Shrinkage

Semi-balloon framing

- incorporates floor framing hanging from top plates
- Eliminates tangential shrinkage in zone of movement
- Floor framing doesn't contribute to overall building shrinkage

Non-standard stud lengths and increased hardware requirements are a result.

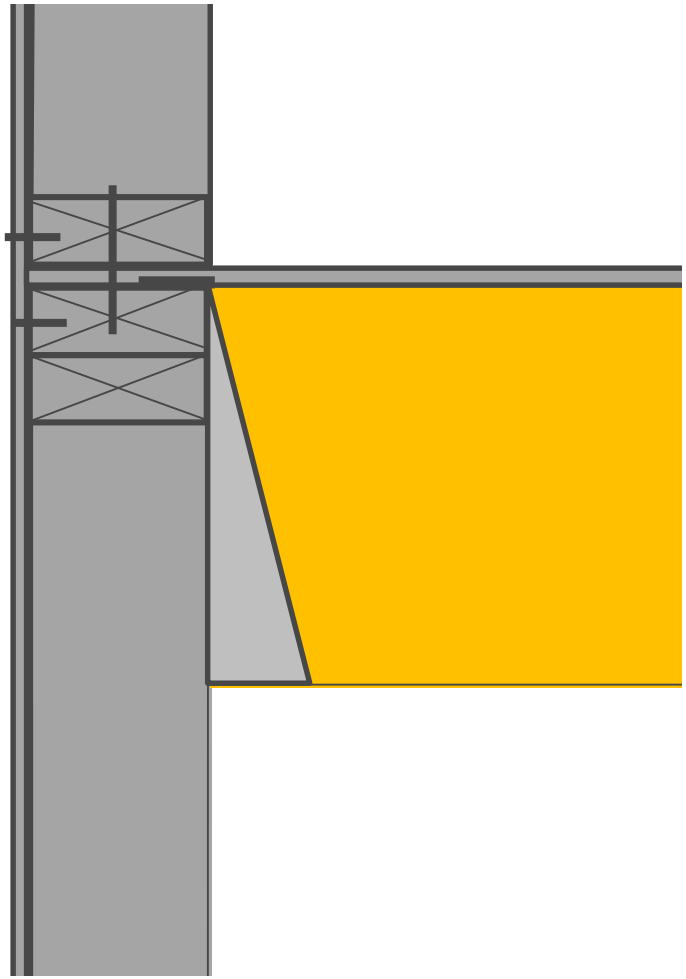

Example Shrinkage Calculation

Assume: S-Dry lumber

Find: Shrinkage in 2x4 Upper Plate & 4x4 Lower Plate

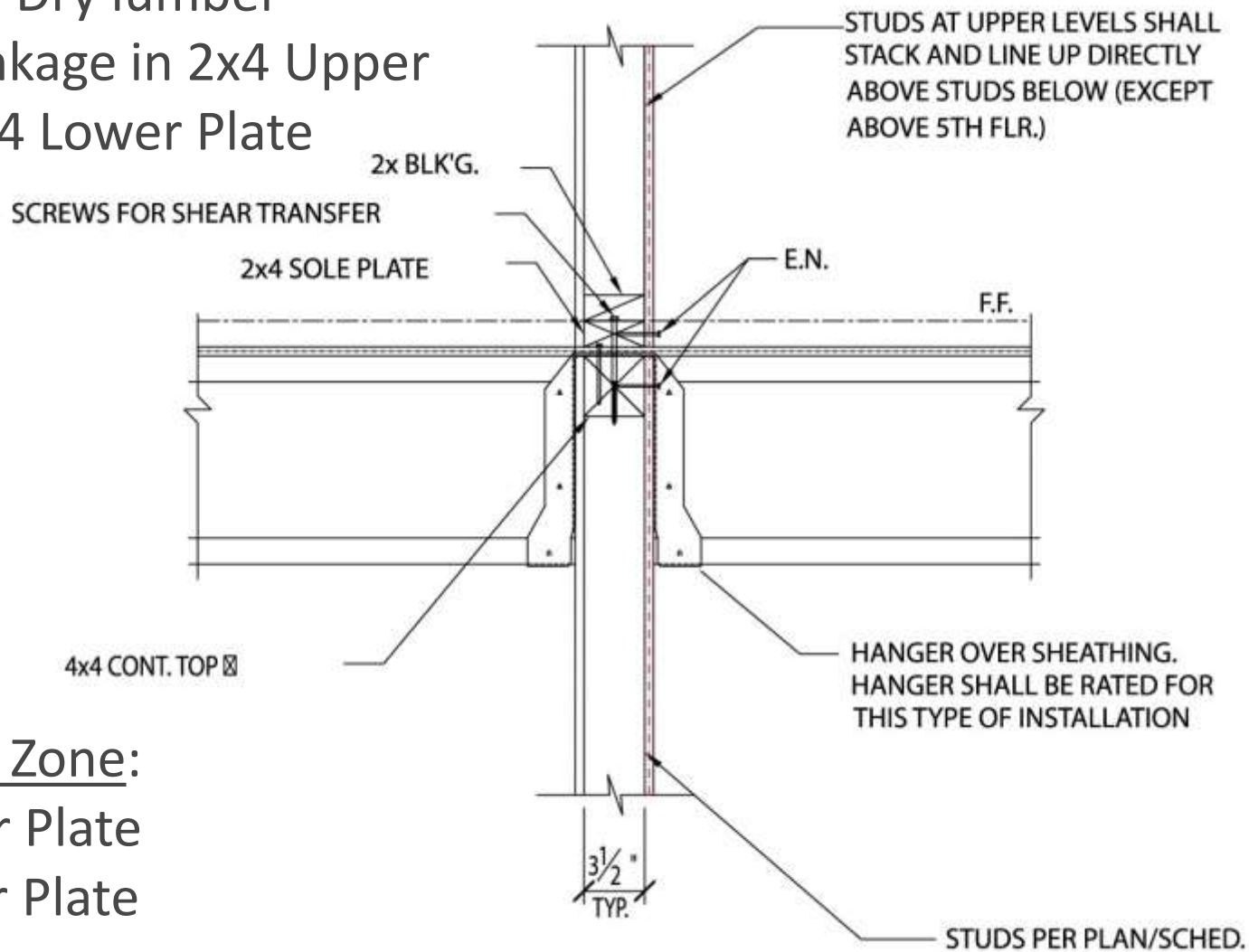

<u>Shrinkage Zone</u>:

2x4 Upper Plate

4x4 Lower Plate

5” Total

Example Shrinkage Calculation

Again assuming the initial MC (M_i) is 19 percent and the final MC (M_F) is 12 percent

Our approximated shrinkage is:

For Doug Fir Larch:

$$S = CD_i\left(M_F - M_i\right) = 0.00319 \times 5\left(12 - 19\right) = \underline{-0.11 inch}$$

For Southern Pine:

$$S = CD_i\left(M_F - M_i\right) = 0.00263 \times 5\left(12 - 19\right) = \underline{-0.09 inch}$$

Differential Movement

Movement between wood frame elements and other materials that…

- do not shrink at all
- shrink much less
- expand

Shrinkage & Finish Considerations

Large expanses of interior and exterior drywall, paneling and siding need to be looked at specifically.

Employ expansion joint and slip-type detailing.

Attention to interaction of structural (load-bearing) and non-structural elements is necessary

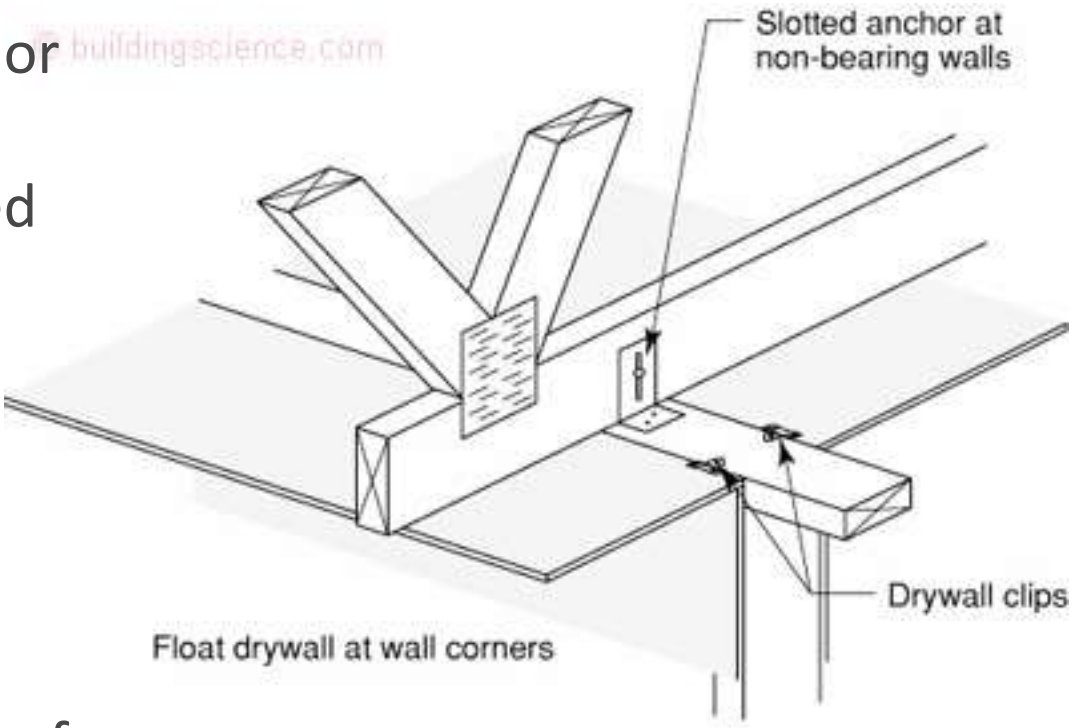

Shrinkage & MEP Considerations

Fully compress wall framing by completing all dead load potential PRIOR to mechanical installations.

Avoid rigid vertical piping in mechanical and plumbing systems. Flexible members allow for shrinkage between floors.

MEP Considerations

Vertical vent stacks should be installed after completion of framing.

Vent stacks require special attention and must be designed to allow for vertical movement due to shrinkage between floors.

MEP Joint Options

A variety of expansion or slip joint connectors are available which address this issue and allow vertical movement in MEP items due to building shrinkage and/or thermal change without causing damage to them

Brick Façade: Solution 1- Plain Unreinforced Brick-h>30’

Design must be in strict conformance with ACI 530 section 6.2.1-Alt. design method (engineered)

Design to section 2.2 (ASD) or 3.2.2 (strength) unreinforced masonry

Brick veneer must be self supporting and not supported off of the wood framing

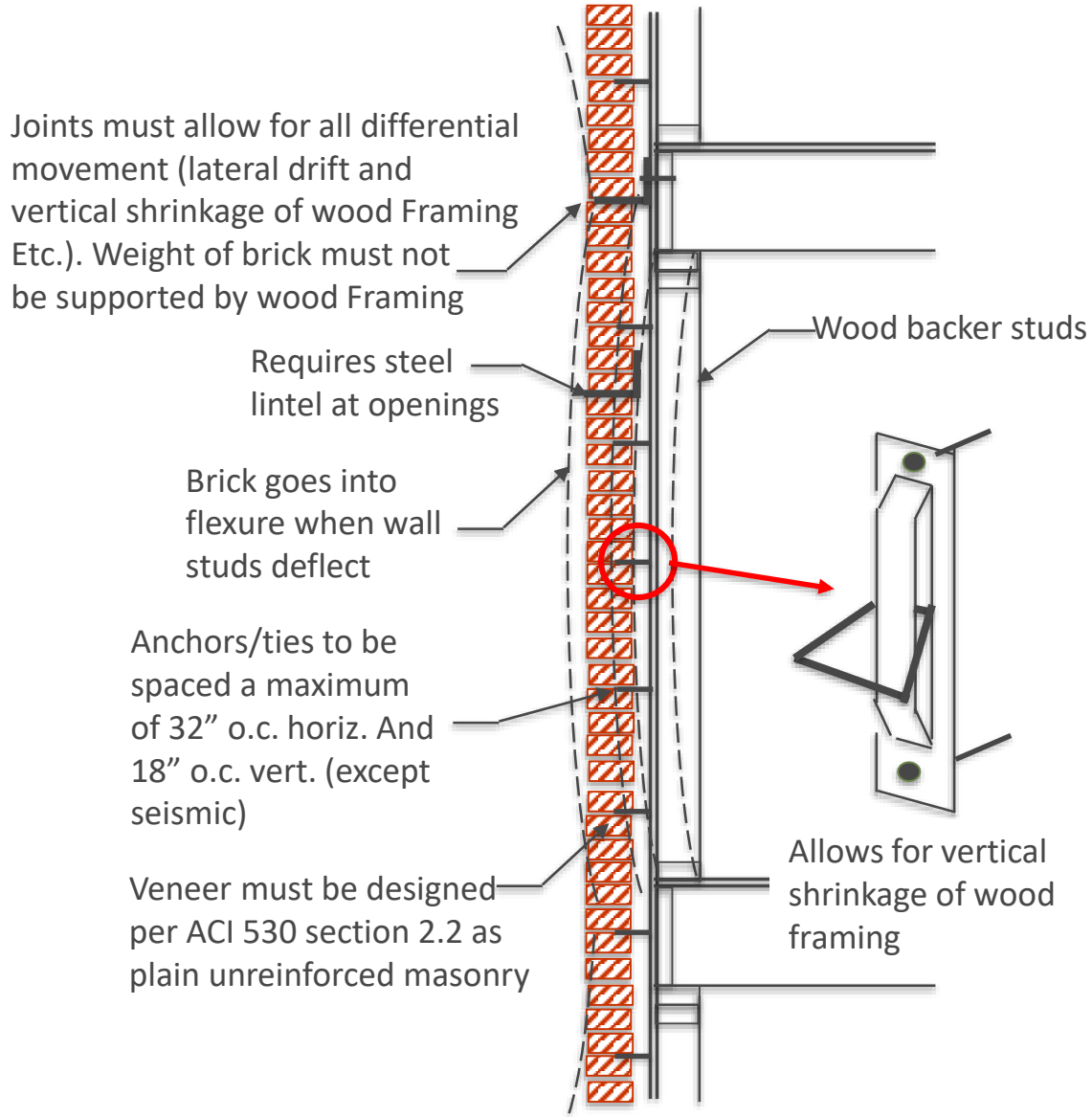

Brick Façade: Solution 2- Structural Reinforced Brick

Brick units are similar to CMU's where vertical and horizontal reinforcing can be installed

- **Veneer spans floor to floor without transferring loads to walls.**
- **Loads are dumped directly into floor diaphragms**
- **Steel lintels over openings are not required**
- **Intermediate anchors/ties are not required**
- **Wall spans vert. & horiz. Between spaced anchors**

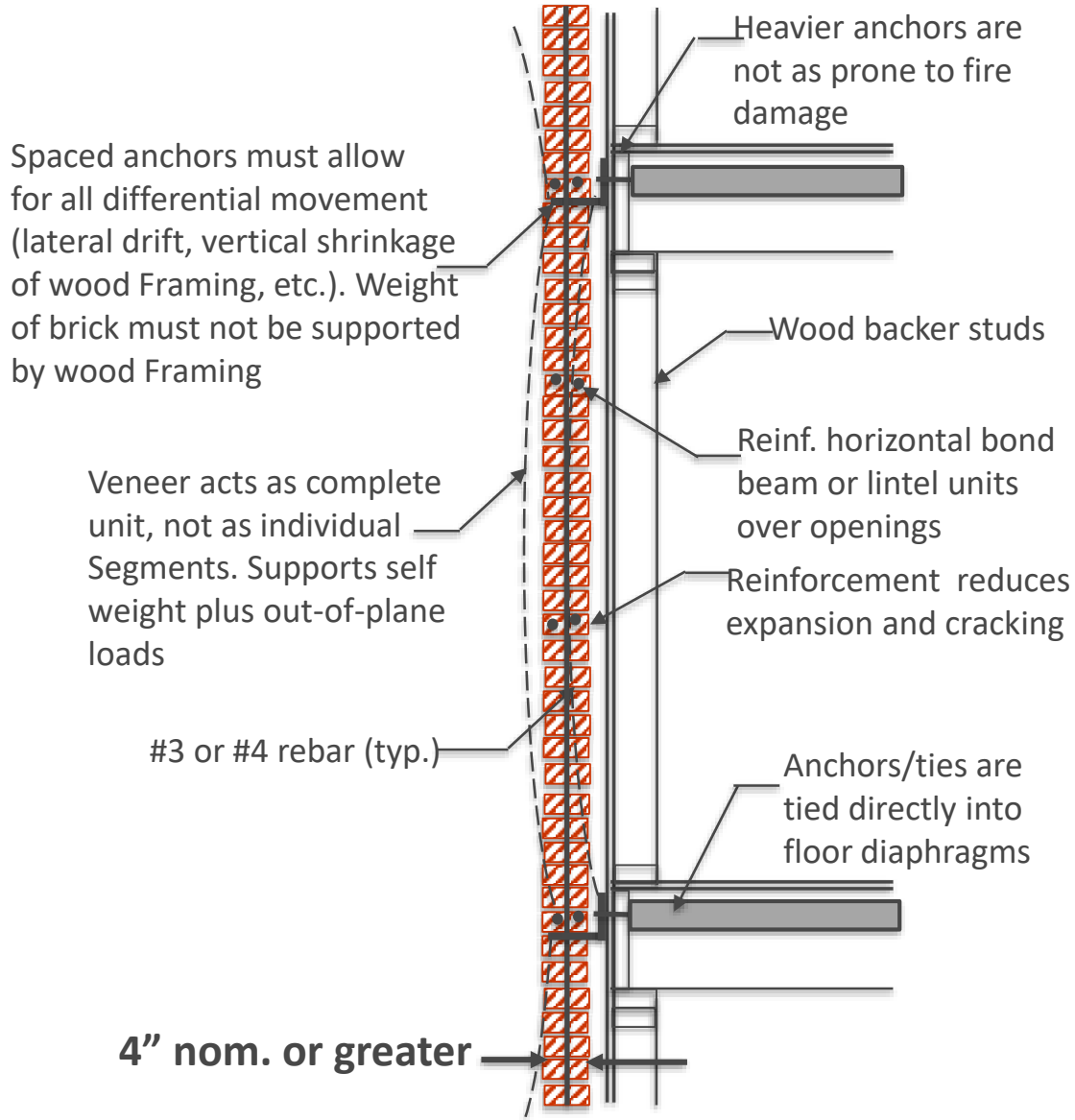

Façade Considerations - Resources

www.woodworks.org

WoodWorks™
WOOD PRODUCTS COUNCIL

Options for Brick Veneer on Mid-Rise Wood-Frame Buildings

R. Terry Malone, PE, SE • Senior Technical Director • WoodWorks

Photo: Josh Meister, courtesy Cooper Carry

Emory Point • Atlanta, GA

Architects: Cooper Carry and The Preston Partnership

Structural engineers: Ellinwood + Machado LLC and Pruitt Eberly Stone Inc.

Completed: 2012

Emory point includes three buildings, one with five stories of Type III-A wood-frame construction over slab-on-grade, and two with four stories of Type V-A wood construction over a Type I-A post-tensioned concrete podium.

Façade Considerations - Resources

Brick Industry Association– www.gobrick.com

BRICK INDUSTRY ASSOCIATION | TECHNICAL NOTES on Brick Construction | 28 | November 2012
1850 Centennial Park Drive, Reston, Virginia 20191 | www.gobrick.com | 703-620-0010

Brick Veneer/Wood Stud Walls

Abstract: This *Technical Note* deals with the prescriptive design of anchored brick veneer over wood stud backing in new construction. The properties of the brick veneer/wood stud system are described, which lead to design considerations. Selection of materials, construction details and workmanship techniques are also included.

Key Words: air space, anchors, brick, flashing, foundations,

SUMMARY OF RECOMMENDATIO

Support:
- Provide a noncombustible foundation to support veneer
- Where vertical support is provided by wood construction, provide steel angles properly attached to or supported by wood framing

Veneer Height Limitations:
- For residential construction (*IRC*), do not exceed height listed in Table 1
- For commercial construction (*IBC*) see "Additional Requirements for Buildings Covered by the *IBC*" and the "Wood" chapter of *IBC*

Air Space:
- Maintain a minimum 1 in. (25 mm) air space*
- Where corrugated anchors are used, maintain a maximum 1 in. (25 mm) air space
- Do not exceed 4½ in. (114 mm) between back of brick and sheathing unless anchors are rationally designed
- Completely fill the air space below wall base flashing with grout or mortar
- Where continuous insulation is placed between the veneer and backing, maintain 1 in. (25 mm) between the back of the brick and the face of the insulation

* An air space is allowed to be a 1 in. (25 mm) nominal dimension in the *IRC* and a 1 in. (25 mm) specified dimension in the *IBC* to account for construction tolerances.

Flashing:
- Install above grade at the wall base and extend to or beyond face of brickwork
- Extend base flashing at least 8 in. (203 mm) vertically
- Place at all points where air space is interrupted and at other locations where water removal is desired, such as

BRICK INDUSTRY ASSOCIATION | TECHNICAL NOTES on Brick Construction | 18A | November 2006
1850 Centennial Park Drive, Reston, Virginia 20191 | www.gobrick.com | 703-620-0010

Accommodating Expansion of Brickwork

Abstract: Expansion joints are used in brickwork to accommodate movement and to avoid cracking. This *Technical Note* ...truction and gives guidance regarding their placement. The theory and ...e given showing proper placement of expansion joints to avoid cracking ...act of expansion joints. Also included is information about bond breaks,

...flexible anchorage, movement, sealants.

...TIONS:

...25 ft

...etrical

...f no

...ena-

...s

...ween

...rial

Brickwork Without Shelf Angles:
- Accommodate brickwork movement by:
  - placing expansion joints around elements that are rigidly attached to the frame and project into the veneer, such as windows and door frames
  - installing metal caps or copings that allow independent vertical movement of wythes
  - installing jamb receptors that allow independent movement between the brick and window frame
  - installing adjustable anchors or ties

Expansion Joint Sealants:
- Comply with ASTM C 920, Grade NS, Use M
- Class 50 minimum extensibility recommended; Class 25 alternate
- Consult sealant manufacturer's literature for guidance regarding use of primer and backing materials

Bond Breaks:
- Use building paper or flashing to separate brickwork from dissimilar materials, foundations and slabs

Loadbearing Masonry:
- Use reinforcement to accommodate stress concentrations, particularly in parapets, at applied loading points and around openings
- Consider effect of vertical expansion joints on brickwork stability

BRICK INDUSTRY ASSOCIATION | TECHNICAL NOTES on Brick Construction | 18 | October 2006
1850 Centennial Park Drive, Reston, Virginia 20191 | www.gobrick.com | 703-620-0010

Volume Changes - Analysis and Effects of Movement

Abstract: This *Technical Note* describes the various movements that occur within buildings. Movements induced by changes in temperature, moisture, elastic deformations, creep, and other factors develop stresses if the brickwork is restrained. Restraint of these movements may result in cracking of the masonry. Typical crack patterns are shown and their causes identified.

Key Words: corrosion, cracks, creep, differential movement, elastic deformation, expansion.

SUMMARY OF RECOMMENDATIONS:

- Use the following coefficients to calculate movements of brick veneer:
  - Thermal expansion: 4×10^{-6} in./in./°F (7.2×10^{-6} mm/mm/°C)
  - Moisture expansion: 5×10^{-4} in./in. (mm/mm)
  - Creep: 0.7×10^{-7} in./in. per psi (0.1×10^{-4} mm/mm per MPa)
- Consider coefficients of movements for other materials in contact with brickwork
- Consider elastic deformation and movement of structural elements supporting and connected to brickwork

INTRODUCTION

All building materials change in volume in response to changes in temperature or moisture. Changes in volume, elastic deformations due to loads, creep and other factors result in movement. Restraint of these movements may cause stresses within building elements that result in cracks.

To avoid cracks, masonry elements should be designed to minimize movement or accommodate differential movement between materials and assemblies. A system of movement joints can reduce the potential for cracks and the problems they cause. Movement joints can be designed by estimating the magnitude of the different movements

Door and Window Considerations

Sealant joint sized to allow shrinkage of wood frame and expansion of brick (typically ¼” to ½” per floor)

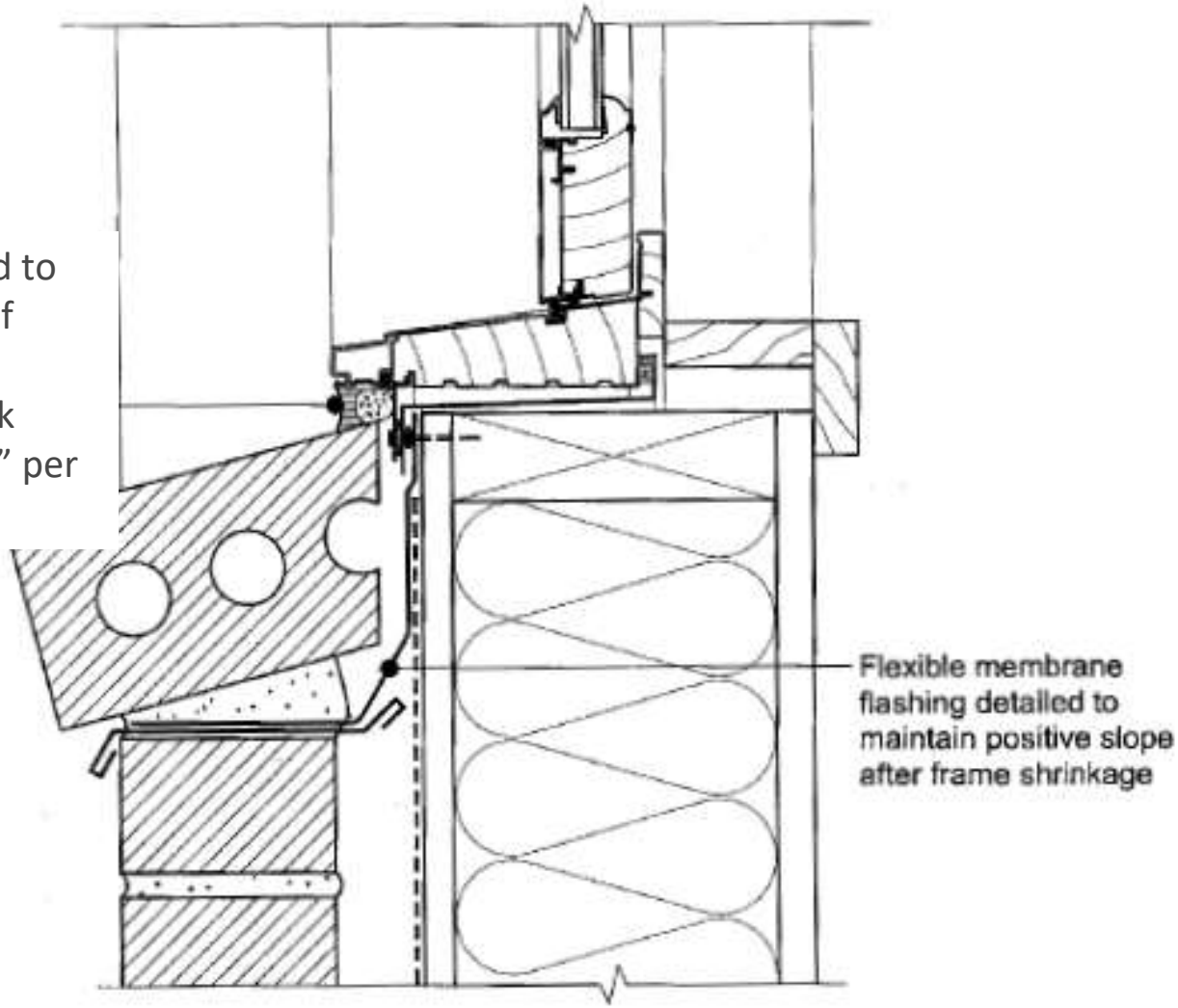

Door and Window Considerations

Flashing and Counter Flashing Detailed to Provide Vertical Flashing Slip Joint to Accommodate Movement

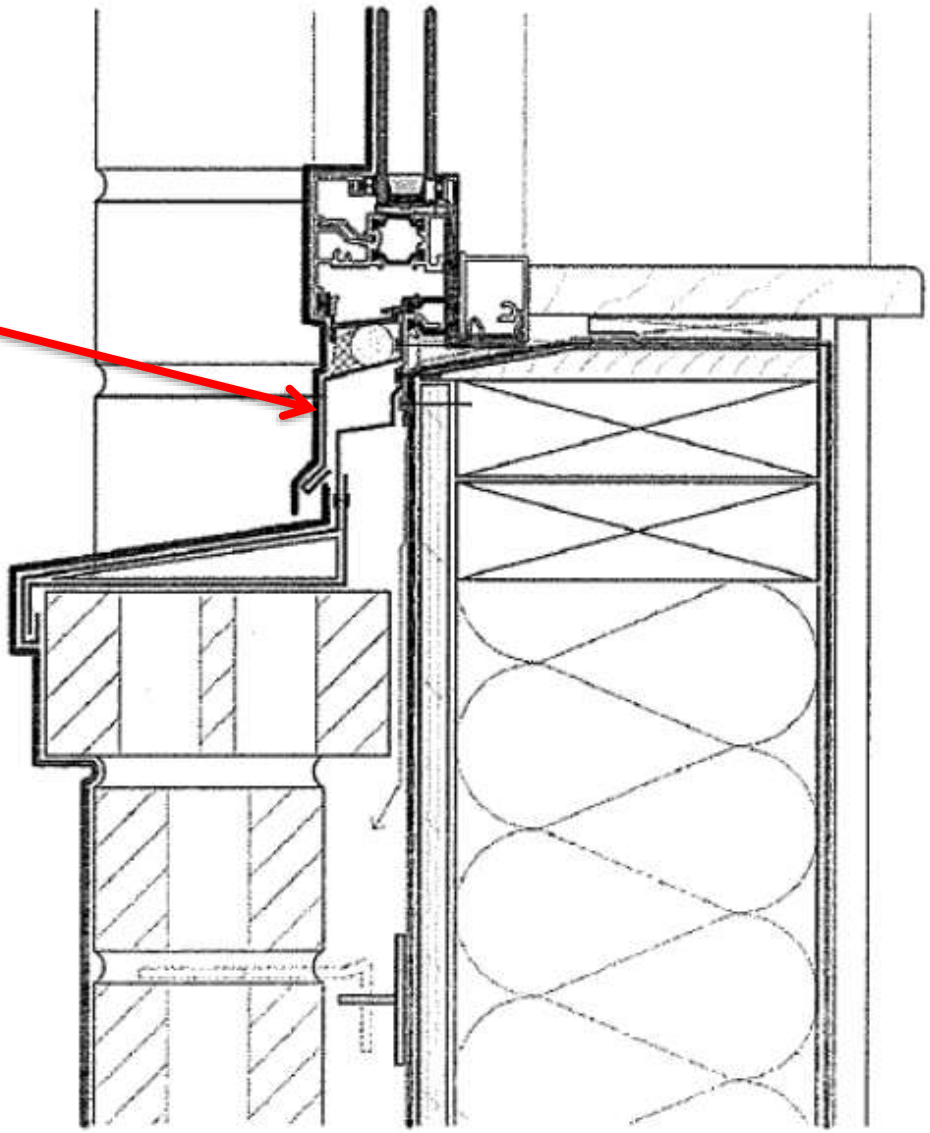

Source: FP Innovations

Door and Window Considerations

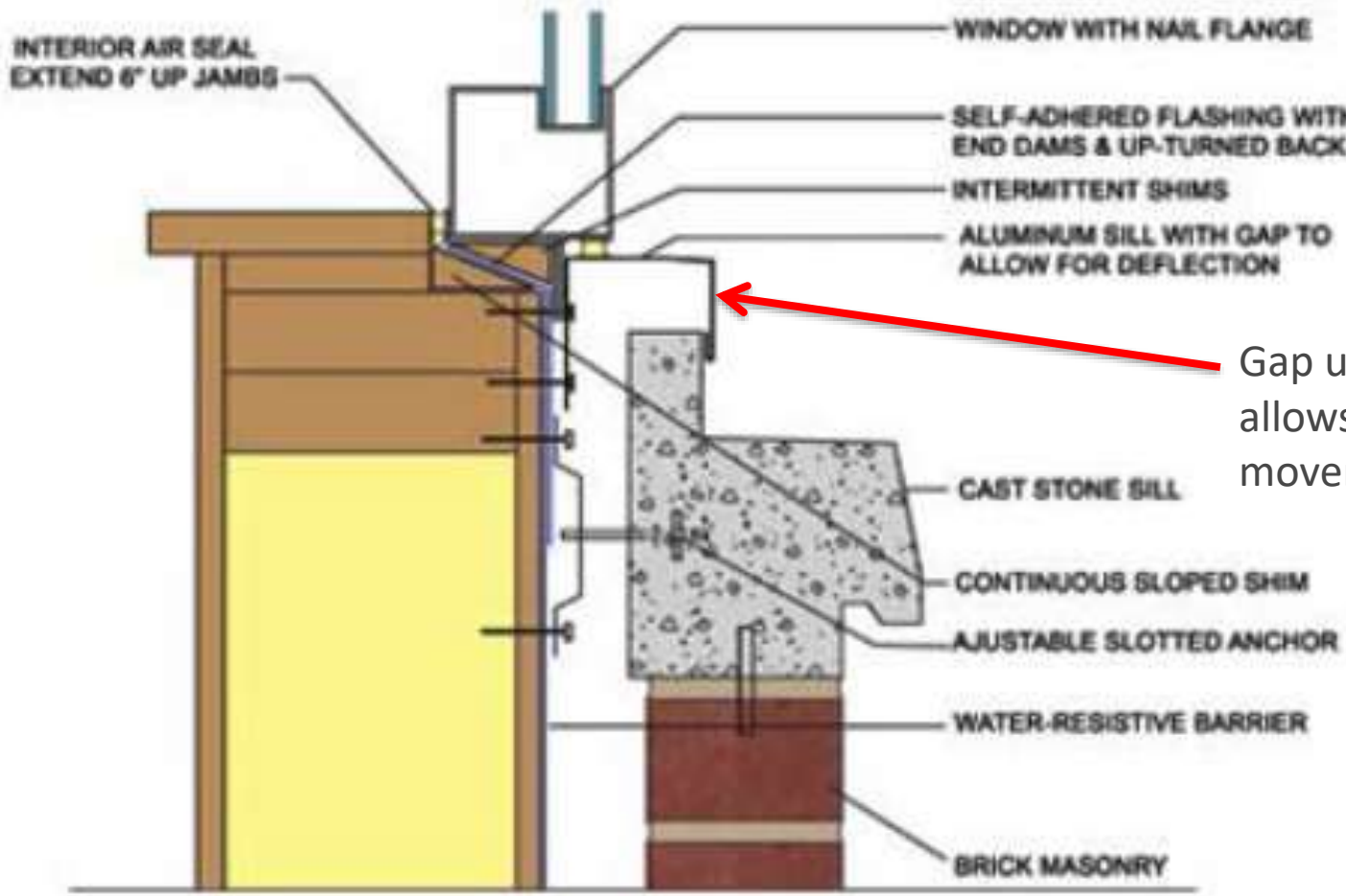

Gap under flashing allows vertical movement

Source: CE News, Feb 2014

Door and Window Considerations

Source: CE News, Feb 2014

Shrinkage Effects on Structural Components

Strap hold downs can buckle with too much accumulated movement.

Anchor type holdowns should re-tightened before installing finishes.

Threaded rod holdowns with shrinkage compensating devices work well for 4 stories and above with stacking units.

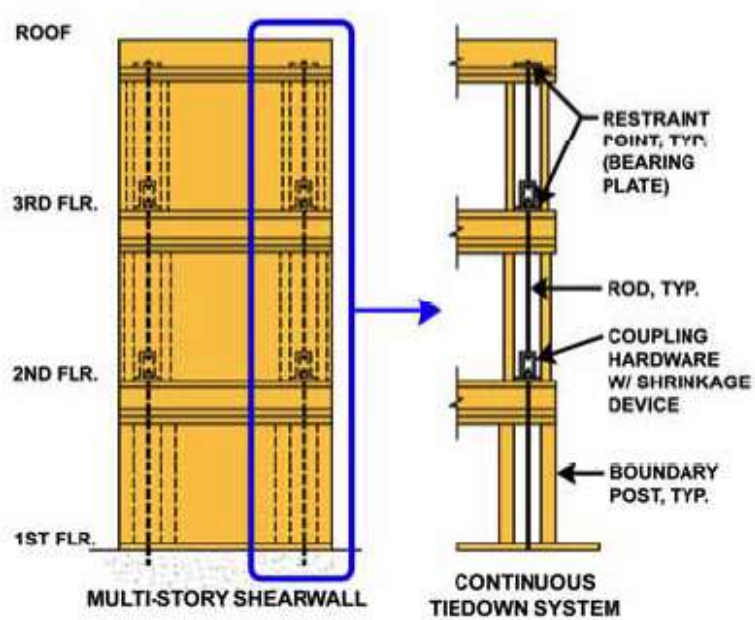

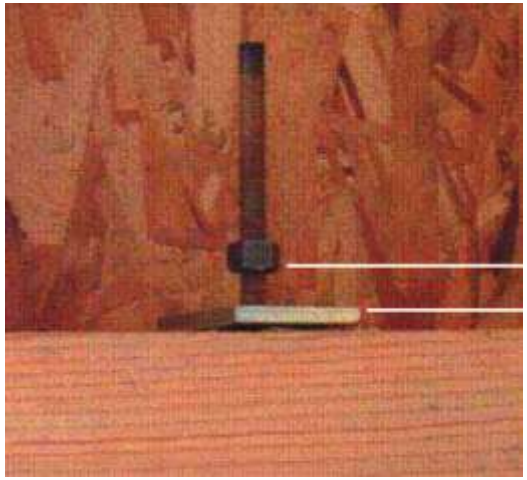

Shrinkage & Deck Considerations

Table 1. Summary of measured deck slopes.

Summary of Deck Slopes for:	Story	Measured Locations	Deck Slope (%)		
			Average	Minimum	Maximum
Free Ledger Condition	4	23	-2.38	-0.70	-2.50
	3	23	-1.22	-0.50	-2.20
	2	23	-0.81	-0.20	-1.60
Fixed Ledger Condition	4	24	-0.26	0.70	-0.90
	3	24	-0.19	1.00	-1.10
	2	24	-0.27	1.20	-1.60

Note: Negative slopes drain to building wall; positive slopes drain away from building wall.

Figure 1. Section of wood-framed wall system showing deck framing with steel deck support columns.

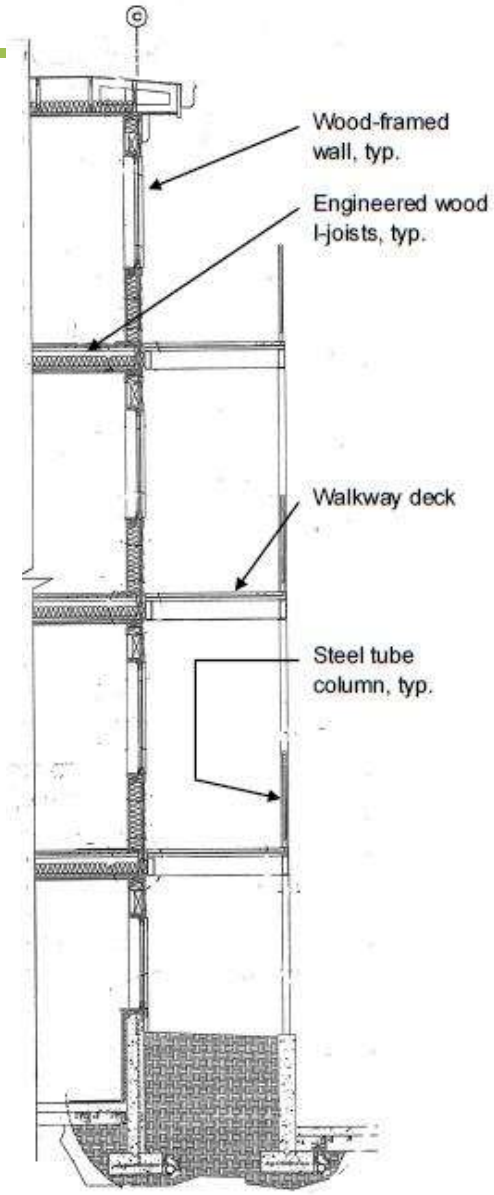

White Paper:

Multi-Story Wood-Frame Shrinkage Effects on Exterior Deck Drainage: A Case Study by Zeno Martin, Wood Design Focus Fall 2010

Shrinkage Mitigating Detailing Tips

Best practices to mitigate distress to finishes arising from cumulative differential movement:

- Be acutely aware of the fact that there will be differential movement
- Address it in detailing and specifications
- Consider where distress will occur
- Provide details to relieve or avoid it

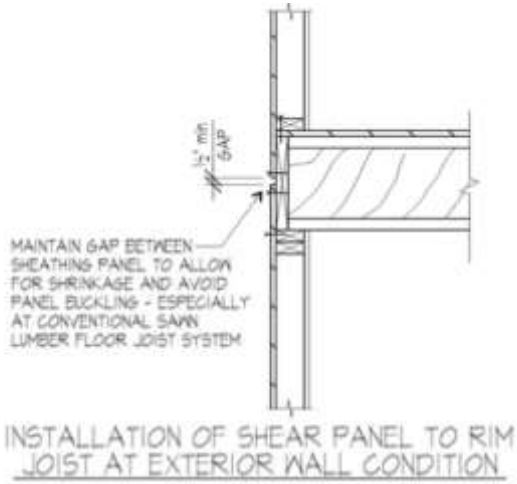

Architects: Cooper Carry & The Preston Partnership
Photo: Aerial Photography Inc.

Shrinkage Resources – www.wwpa.com

WWPA Technical Guide

BUYERS GUIDE | PUBLICATIONS | ABOUT WWPA | SERVICES

Dimensional Stability of Western Lumber

From WWPA publication Dimensional Stability (TG-3), rev. 1990

Contents

Reasons for Drying Wood
Wood Structure
Moisture in Wood
Atmospheric Conditions and Moisture Content
Equilibrium Moisture Content
EMC Charts: EMC Dry-Bulb Temperatures
EMC Map
EMC U.S. Locations (1997)
Shrinkage and Swelling
Using Dimensional Change Coefficients
Preventing Defects Caused by Unequal Dimensional Changes

Wood is one of our most important building materials. We live in wood houses, utilize wood furniture and enjoy the beauty and warmth of wood. Many people work with wood for a livelihood or as a hobby because of its unique features, abundance in many areas and the renewability of the forests from which it is derived. Wood is used in many forms throughout the world, however, few people fully understand its properties.

Wood possesses many excellent qualities, but it also has certain peculiarities which must be understood and considered for optimum application. One of these is its hygroscopicity which causes change in some properties due to the moisture absorption and desorption.

Wood, composed mainly of cellulose and lignin, shrinks as it dries and swells as it absorbs moisture. Dimensional changes generally take place from 0% to 30% moisture

TECH NOTES

Published by Western Wood Products Association, 522 S.W. Fifth Ave., Suite 500, Portland, OR 97204 503/224-3930

Report No. 10 | **www.wwpa.org** | **November 2002**

Shrinkage Calculations for Multistory Wood Frame Construction

Lack of affordable housing is an important issue affecting all major industrialized cities. Multistory/multifamily wood frame construction offers one cost-effective solution. Wood frame construction has advantages over steel, masonry and concrete in speed of construction and material cost in buildings ranging from one to five stories in height.

How wood acclimates to its surrounding environment is an important design consideration. Wood, as a natural material, shrinks and swells with changes in moisture content. Accommodating for the effects of shrinkage of wood frame members is one of the key considerations in designing and building these structures. Proper design and construction contribute to the performance of multistory wood frame structures over time.

Moisture in Solid-Sawn Lumber

Standard moisture content designations are used to indicate the moisture content (MC) of lumber at time of manufacture. The designations are as follows:

WWPA Lumber Shrinkage Estimator

DOWNLOAD

Right click on the button above or here to begin downloading. If you have Microsoft Excel loaded, the program will open in your browser window.

Features easy-to-use form to estimate shrinkage by selecting the Western species group, starting moisture content, ending moisture content and product size from 1x2 to 24x24. Comparisons can be made between two Western species groups.

Minimum requirements:

Outline

- Mid-Rise Construction Types & Life Safety Review
- Structural Design & Detailing Considerations
- Shrinkage Considerations & Detailing
- Acoustic Requirements & Detailing
- Fire Resistive Requirements and Detailing

Building Acoustics Overview

Air-borne sound:

- Sound Transmission Class (STC)

Measures how effectively an assembly isolates air-borne sound and reduces the level that passes from one side to the other

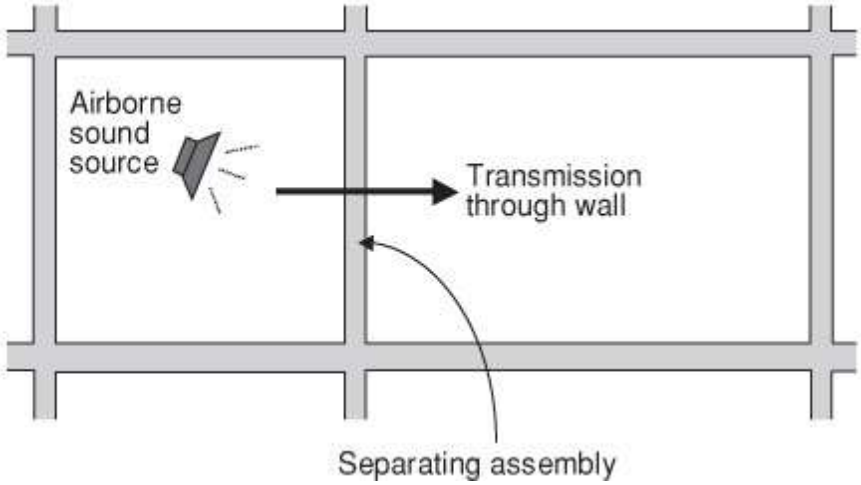

Structure-borne sound:

- Impact Insulation Class (IIC)

Evaluates how effectively an assembly blocks impact sound from passing through it

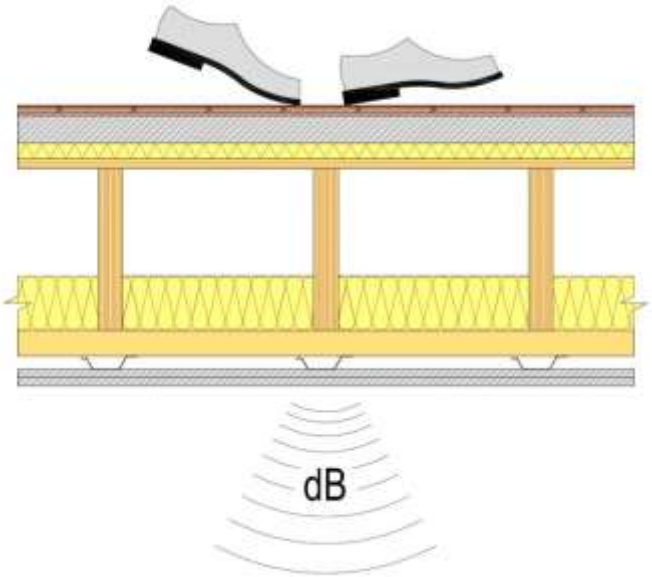

Acoustical Code Requirements

IBC Section 1207:

Min. STC of 50 (45 if field tested) for:

- All Walls, Partitions, and Floor/Ceiling Assemblies which separate adjacent dwelling units or a dwelling unit from an adjacent public area

Min. IIC of 50 (45 if field tested) for:

- All Floor/Ceiling Assemblies which separate adjacent dwelling units or a dwelling unit from an adjacent public area

Acoustical Isolation Between Units

Class Designation	Airborne Sound Isolation (STC)	Floor Ceiling Impact Isolation (IIC)
Entry Level	50	50
Market Rate	55	55
Luxury	60	60

Exterior-to-Unit

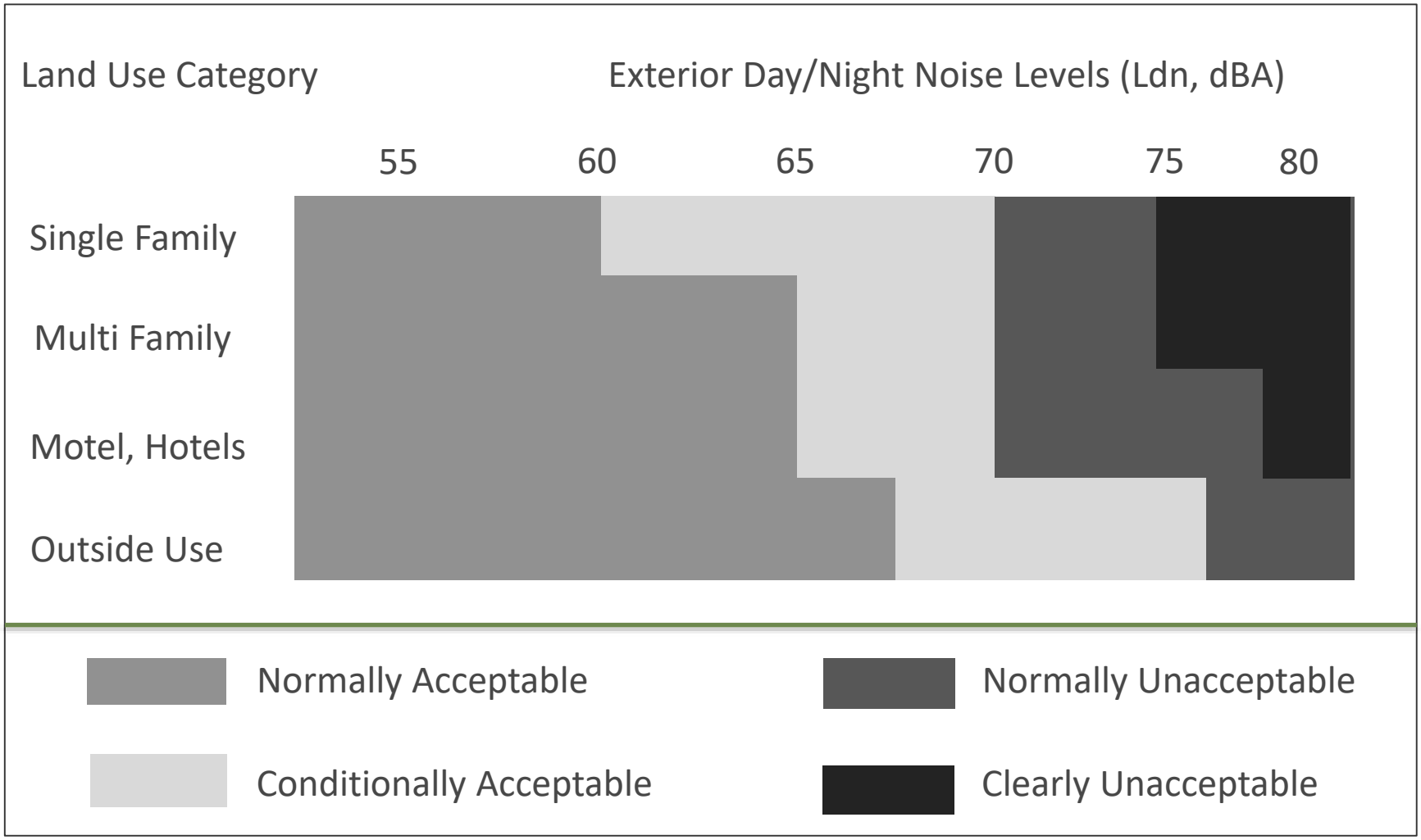

State of California General Plan Guidelines, 1987

Retail-to-Unit

Typical Floor-Ceiling Detail

Although common between restaurants or bars and the apartments above, the configuration shown in this detail may lead to noise complaints by apartment occupants.

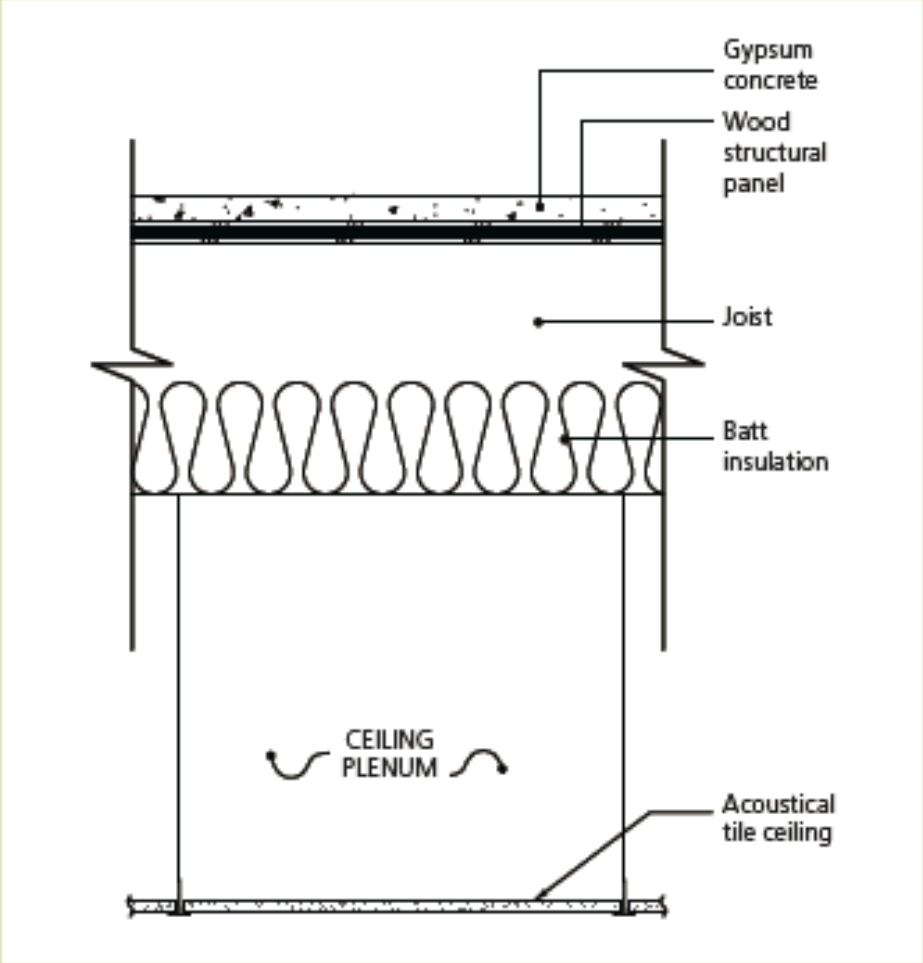

Rated Assemblies

WOOD FRAMED WALLS & PARTITIONS

STC	GA FILE NO.
60 - 64	WP 3010
	WP 5450
55 - 59	WP 3110
	WP 3810
	WP 3812
	WP 3820
	WP 3825
	WP 5508
	WP 5509
	WP 5510
	WP 5520
50 - 54	WP 3005
	WP 3239
	WP 3240
	WP 3241
	WP 3242
	WP 3243
	WP 3244
	WP 3245
	WP 3246
	WP 3247
	WP 3251
	WP 3260
	WP 3261
	WP 3910
	WP 5530

SHAFT WALLS

STC	GA FILE NO.
50 - 54	WP 7051
	WP 7052
	WP 7053
	WP 7054
	WP 7054.4
	WP 7056
	WP 7057
	WP 7058
	WP 7059
	WP 7060
	WP 7061
	WP 7062
	WP 7064
	WP 7065.2
	WP 7065.4
	WP 7065.5
	WP 7400
	WP 7422

AREA SEPARATION FIRE WALLS

STC	GA FILE NO.
65 - 69	ASW 0800
	ASW 0810
60 - 64	ASW 0980
	ASW 0985
	ASW 0997
	ASW 0998
	ASW 0999
	ASW 1000
	ASW 1003
	ASW 1004
	ASW 1006
50 - 54	ASW 1100
	ASW 1105
	ASW 1111

WOOD FRAMED FLOOR-CEILINGS

STC	GA FILE NO.
60 - 64	FC 5011
	FC 5012
55 - 59	FC 5102
	FC 5103
	FC 5104
	FC 5105
	FC 5107
	FC 5109
50 - 54	FC 5111
	FC 5112
	FC 5115
	FC 5116
	FC 5119
	FC 5120

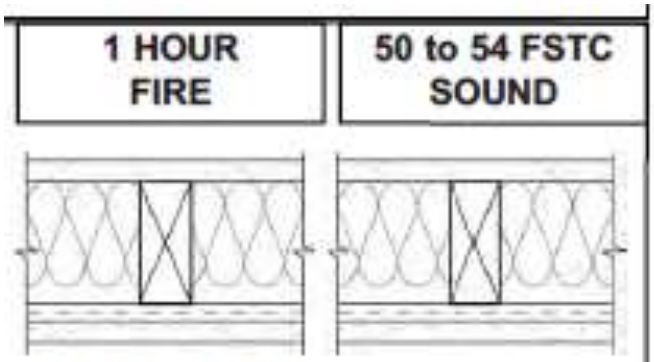

One of Many Performance Goals

University of Washington Student Housing
Seattle, WA
Architect: Mahlum
This five-building project includes a strategic combination of staggered and double stud walls to minimize sound transmission.

Photo: Benjamin Benschneider

Acoustically Rated Assemblies

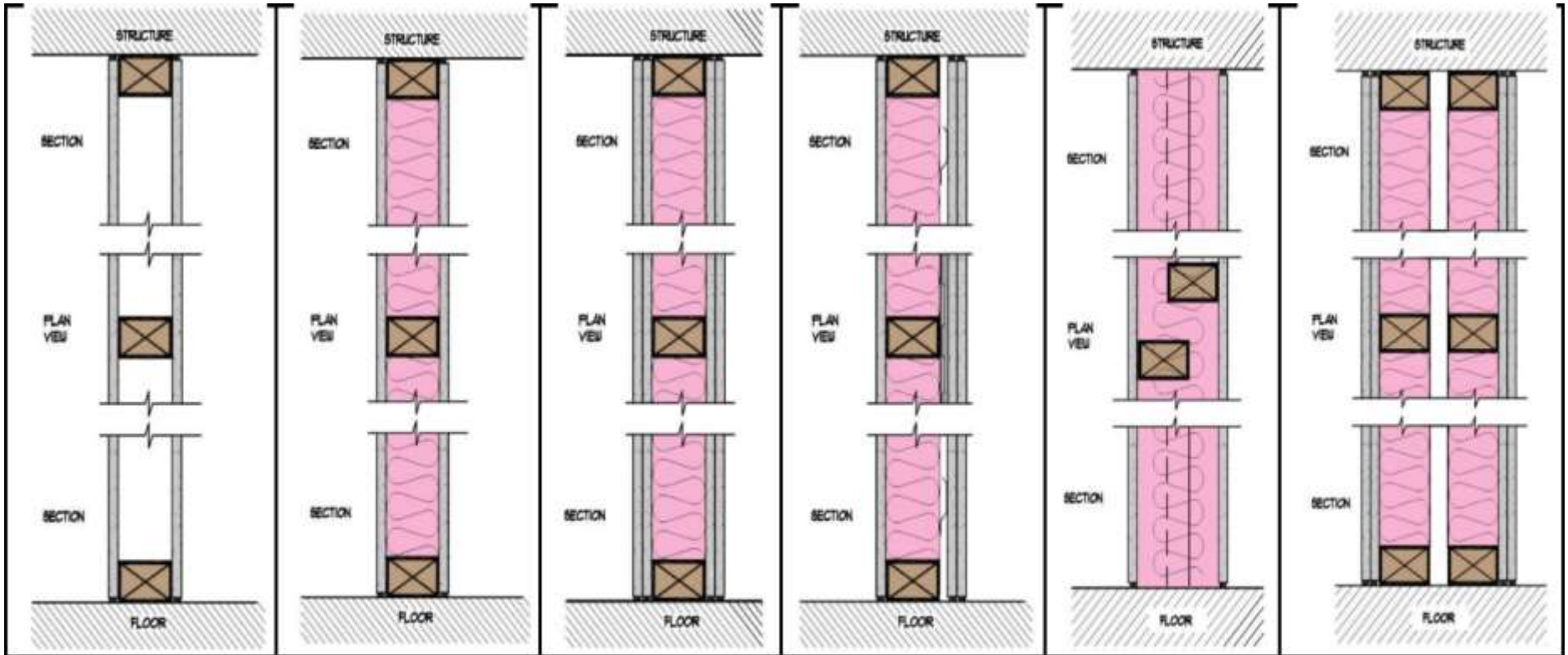

STC 34	STC 38	STC 45	STC 50	STC 49	STC 63

Figure 1 - Acoustical Progression in Wood Framed Walls

Many available free online STC & IIC rated assembly charts (USG, GP, others)

Acoustically Rated Assemblies

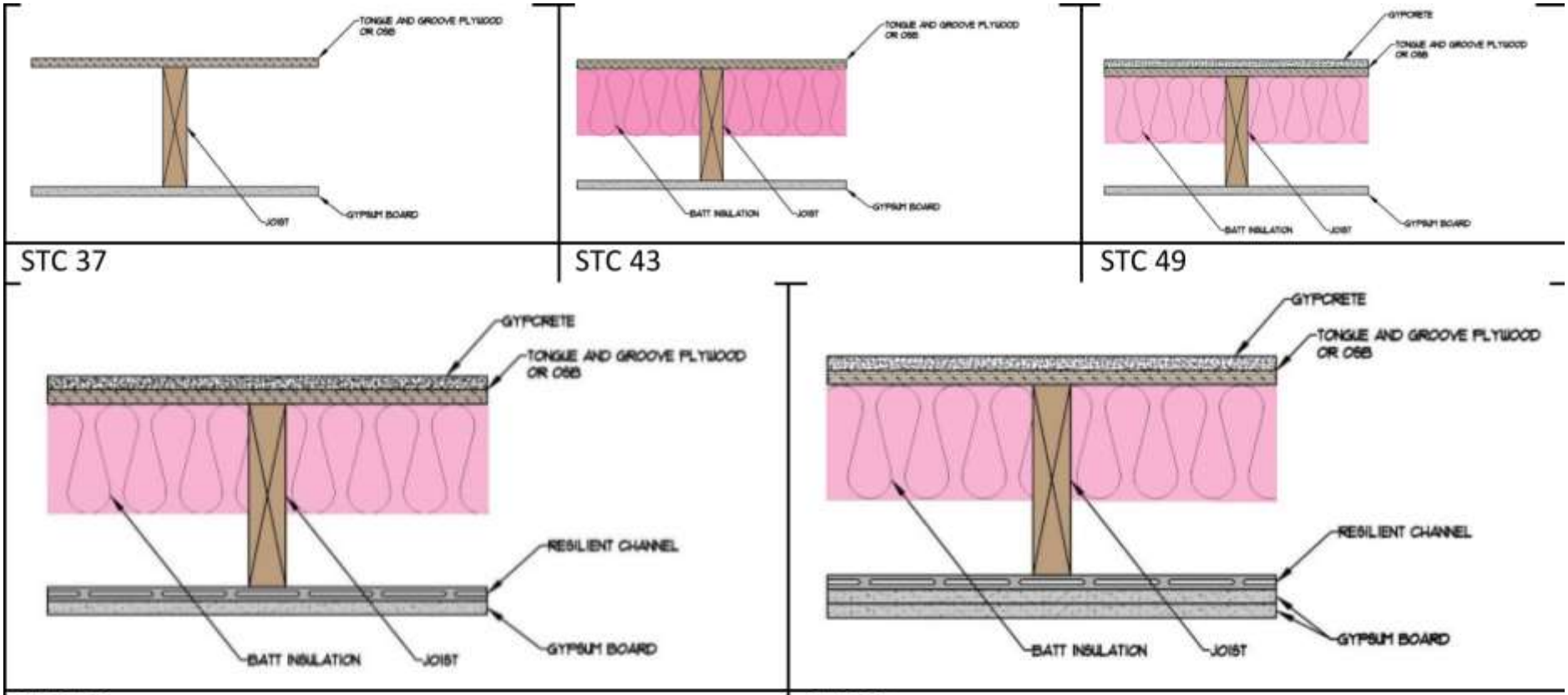

Figure 1 - Acoustical Progression in Wood Framed Floor / Ceilings

Air Tight and Insulated

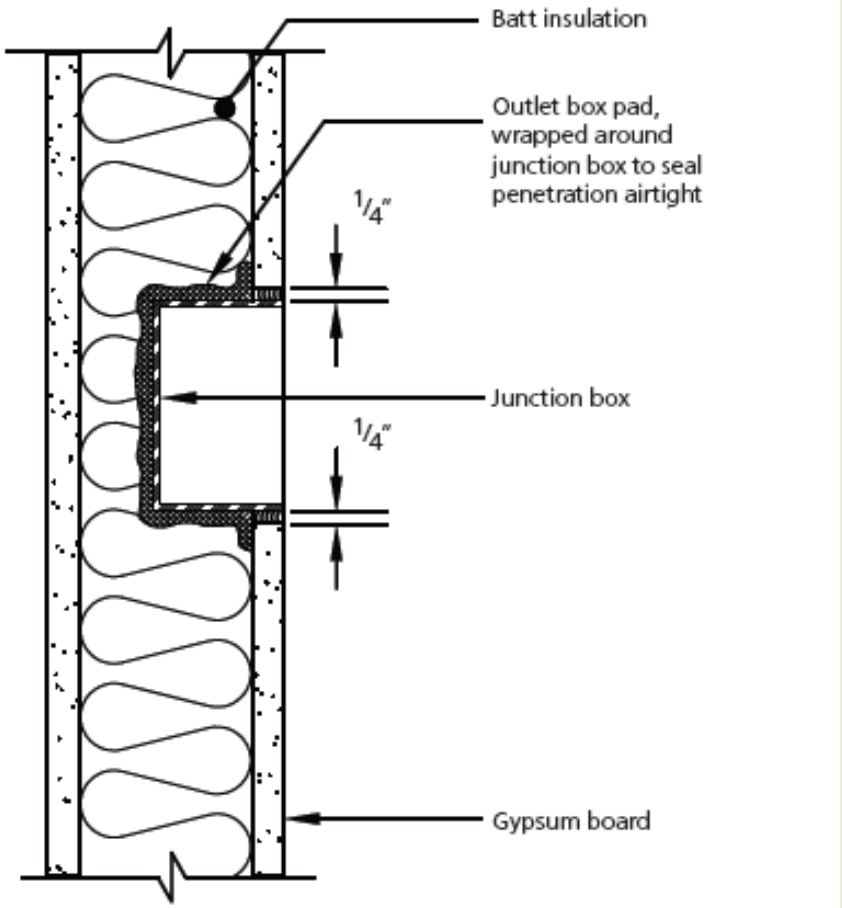

Examples of ineffective and effective installation

Photo Dr. Energy Saver

Electrical Boxes – Avoid Flanking Paths

Electrical Boxes – Avoid

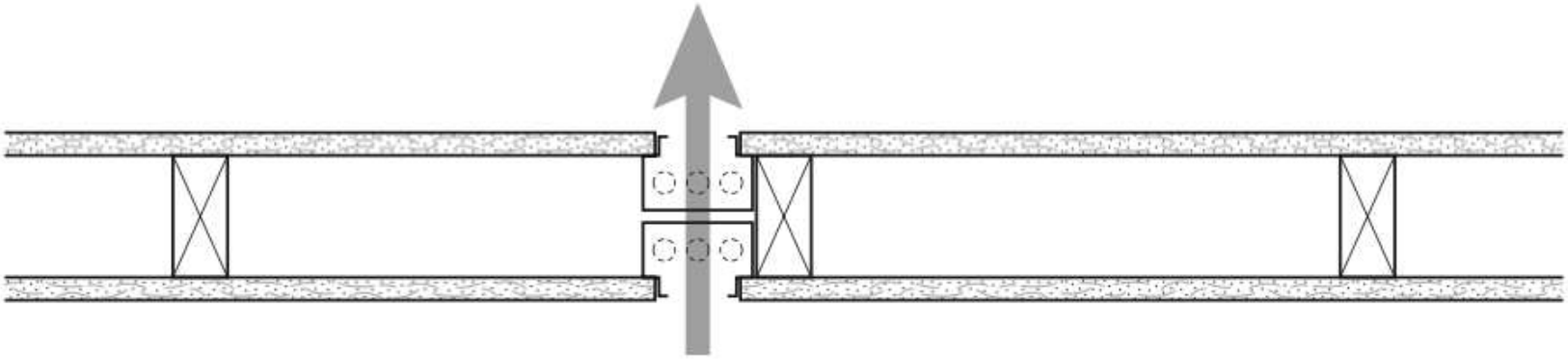

Electrical Boxes – Better

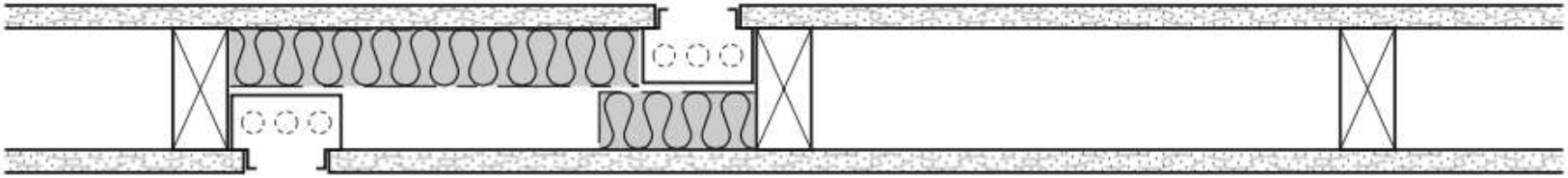

Electrical Boxes – Recommended

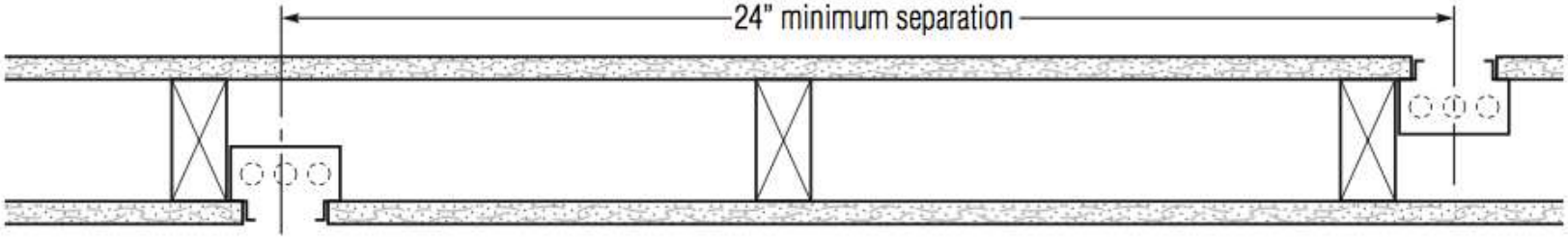

Walls – Double Stud

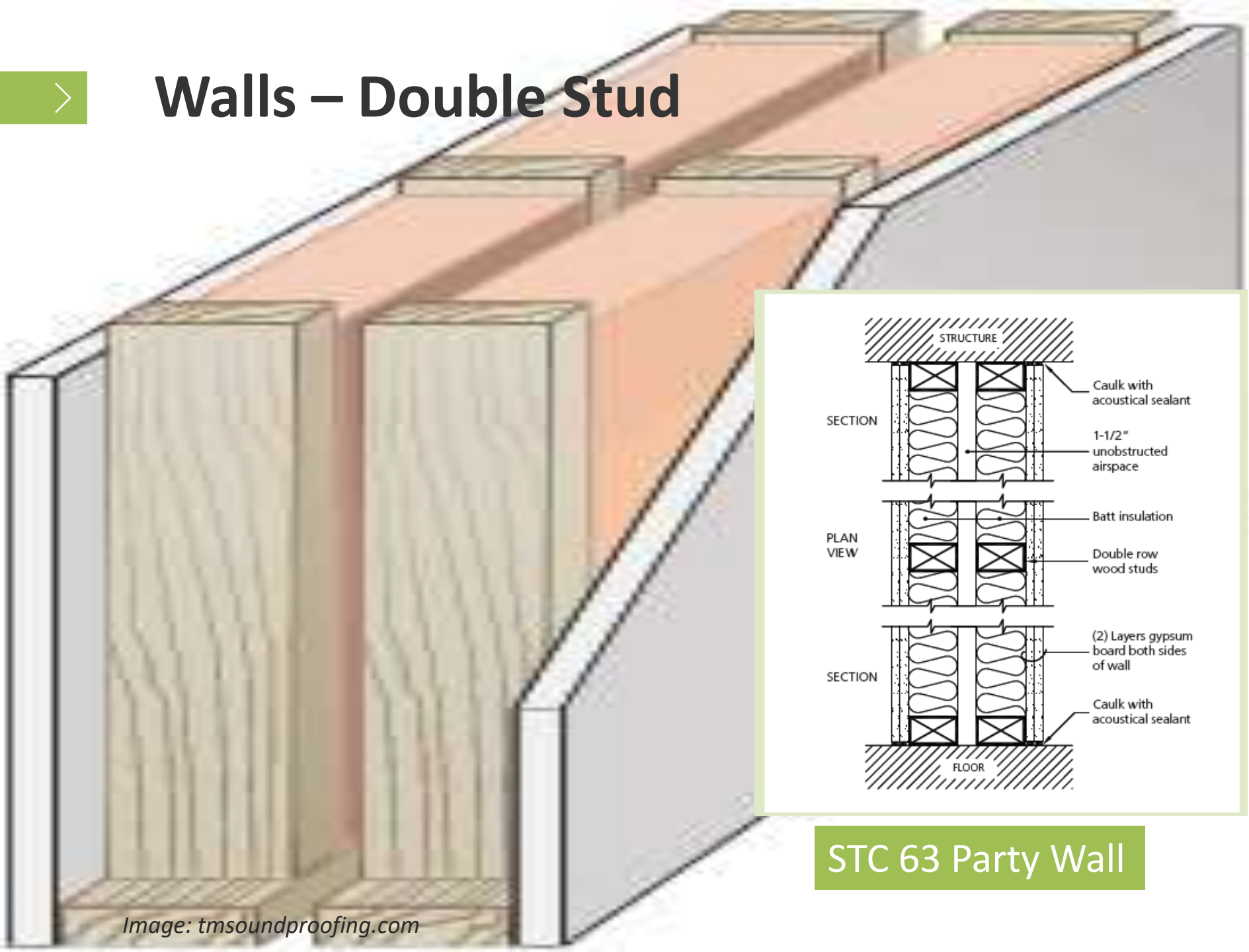

STC 63 Party Wall

Image: tmsoundproofing.com

Walls – Staggered and Single Stud

After double stud construction, the next best solutions are staggered and single stud.

Photos: Root Graphics (l); Arch Wood Protection

Acoustical Detailing

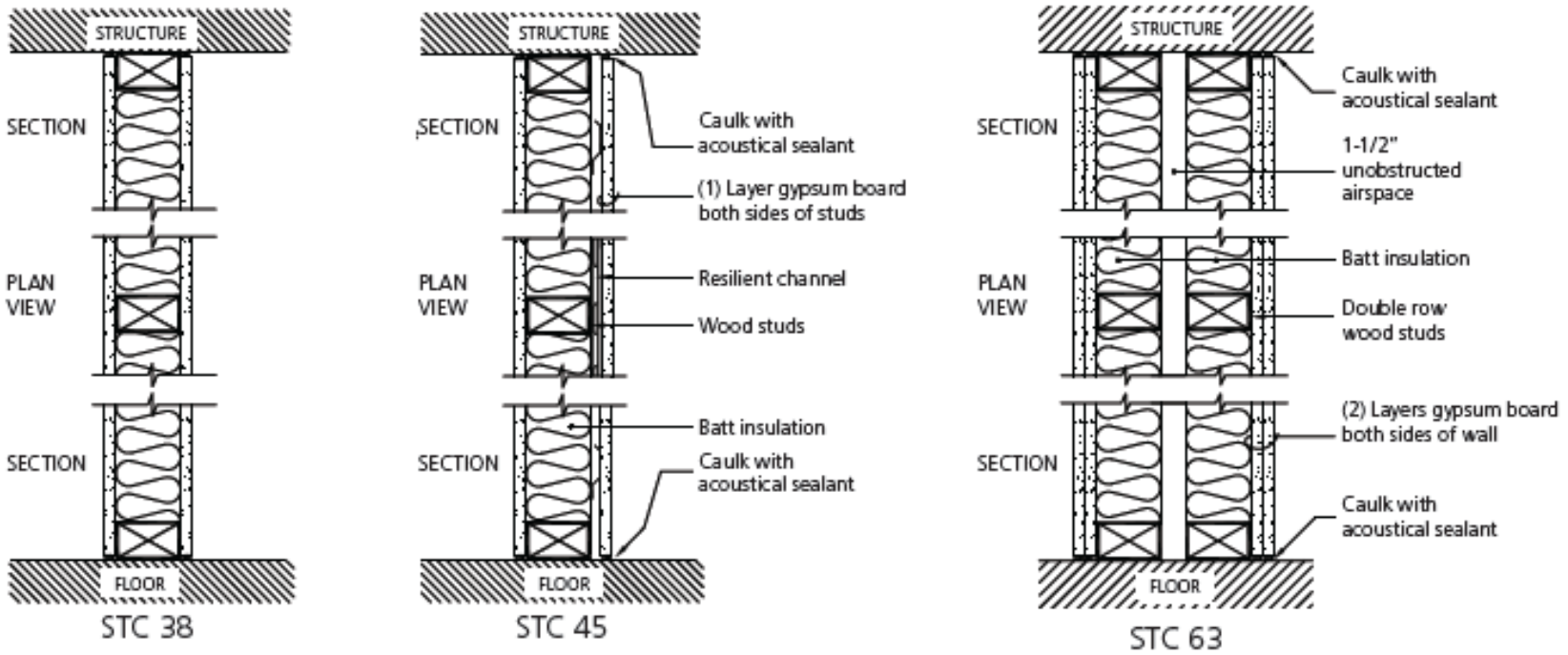

Improvement Factor: Sheathing

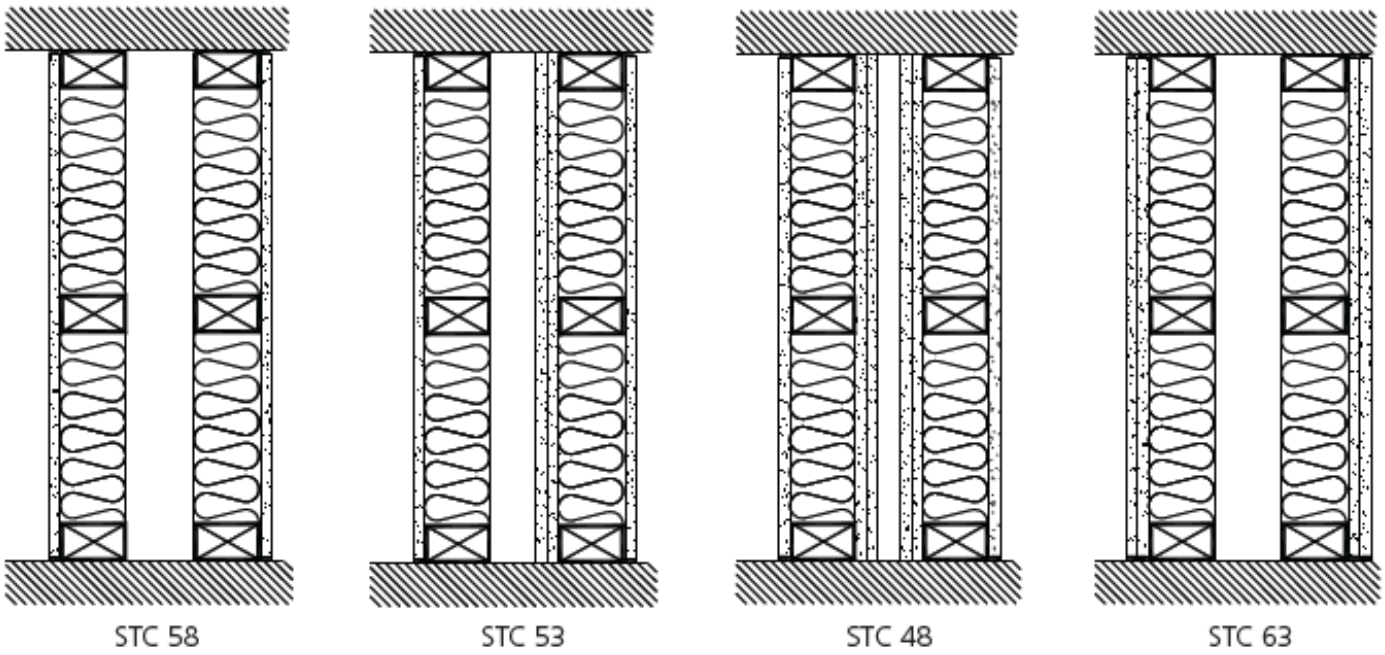

Effect of sheathing placement on acoustical performance

Improvement Factor: Insulation

The most cost-effective acoustical improvement to a sound insulation system is the addition of batt insulation or any open cell foam system to the stud or joint cavity.

Photo Dreamstime

Improvement Factor: Resilient Channels

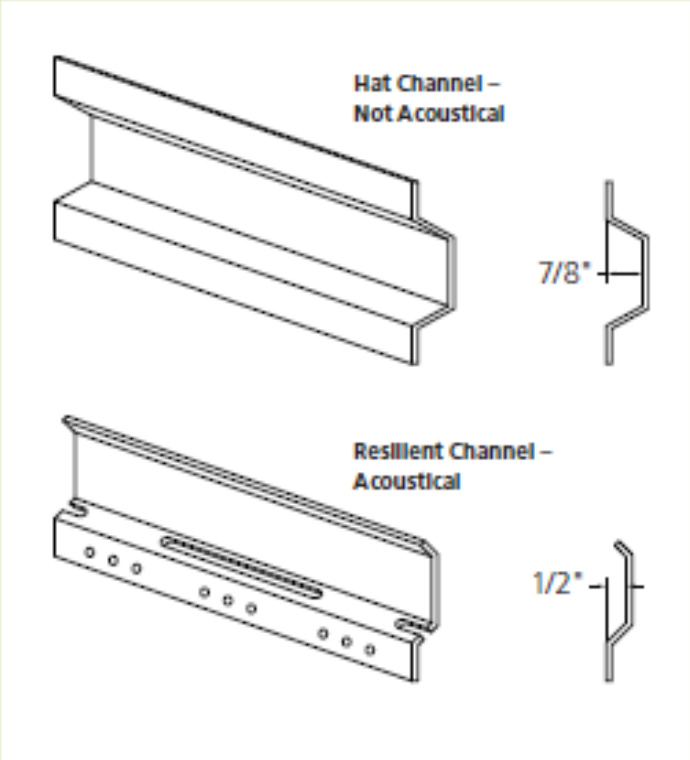

Metal channels found in wood framing

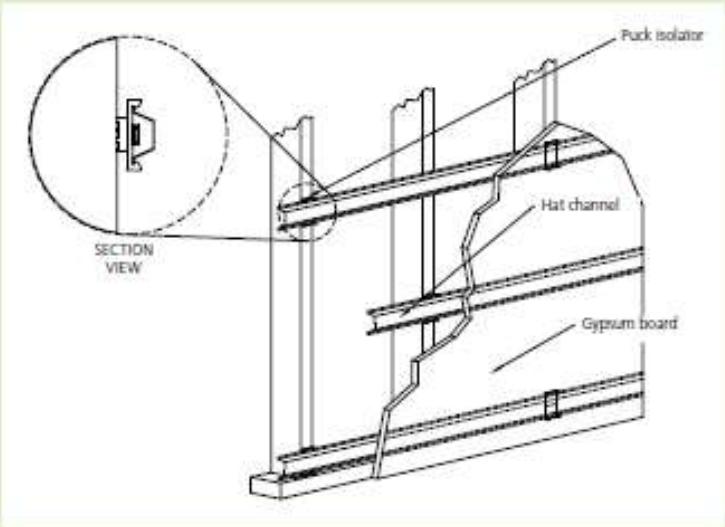

Acoustical 'puck isolator' wall detail (isometric view)

Improvement Factor: Resilient Channels

Proper resilient channel and fastener installation is key to the performance of the system

Resilient Channel Wall Framing – Avoid

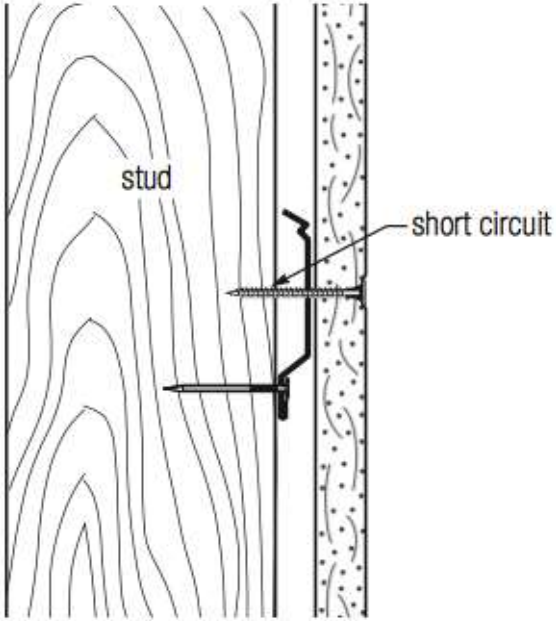

Resilient Channel Wall Framing – Recommended

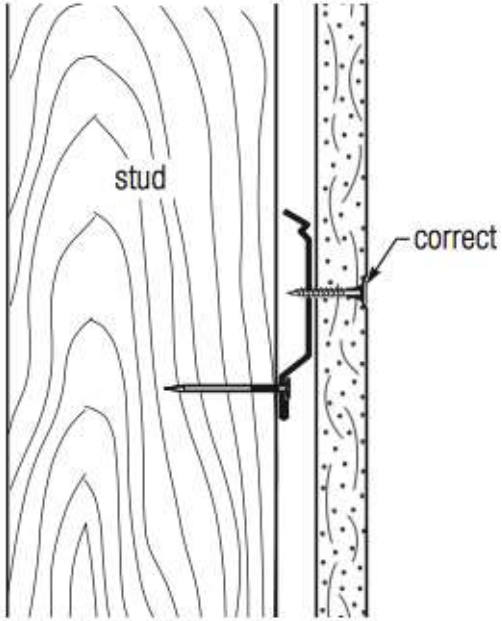

Floor-Ceiling Systems

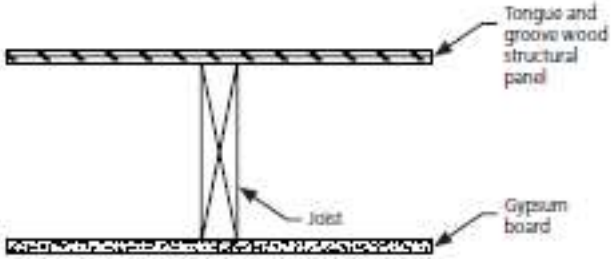

STC 37

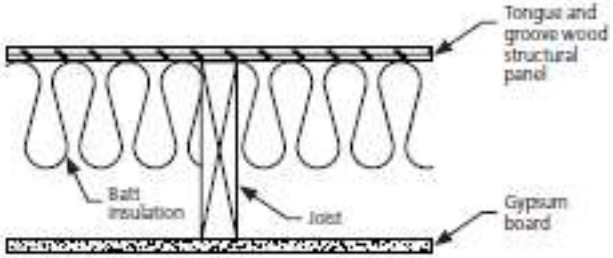

STC 43

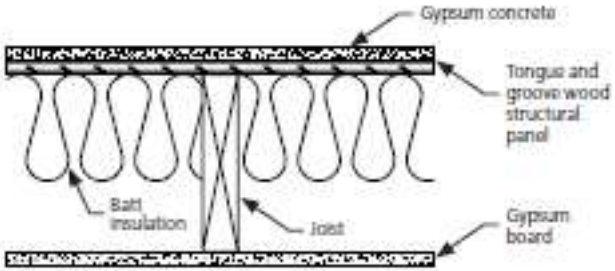

STC 49

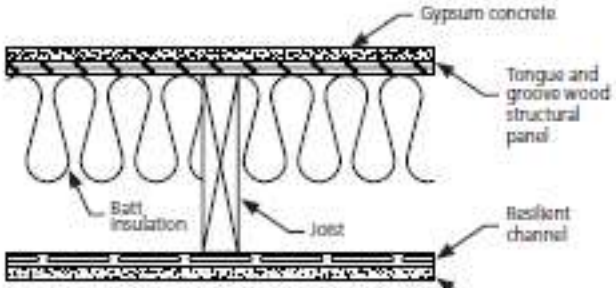

STC 56

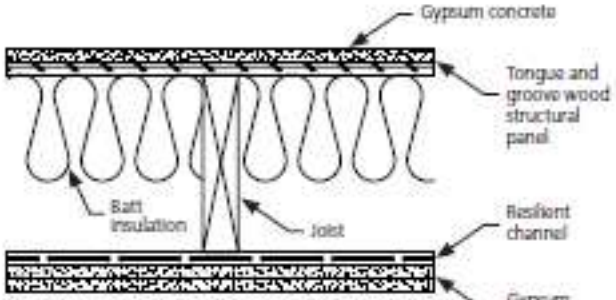

STC 62

Acoustical Detailing

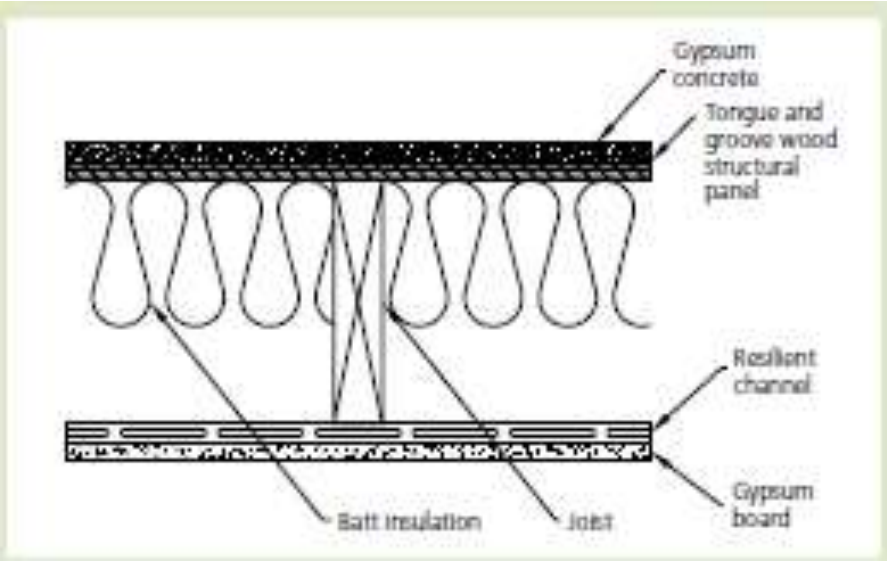

Effective floor-ceiling option includes:

- Gypcrete or light-weight concrete
- Impact isolation matt
- Tongue and groove subfloor (glued and screwed to the joist)
- Joist system (with 6 inches of batt insulation)
- Resilient channel or puck system (resilient system)
- Two layers of 5/8-inch type “X” gypsum board

Impact Isolation

Impact Isolation Progression in Wood-Frame Floors/Ceilings (Section View)

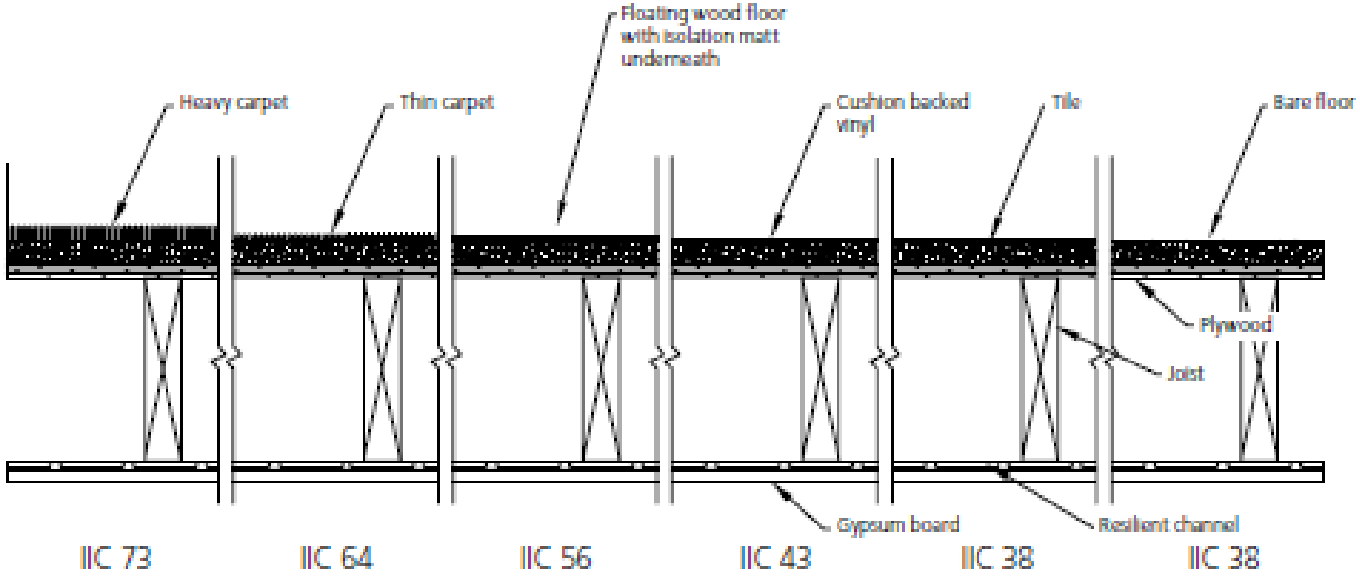

For clarity, batt insulation in the joist cavity is not shown

Additional Acoustics Best Practices

- Avoid creating flanking paths
- Isolate mechanical systems between units
- Seal openings in assemblies (where air flows, sound flows)
- Avoid aligning doors on opposite sides of common hallways

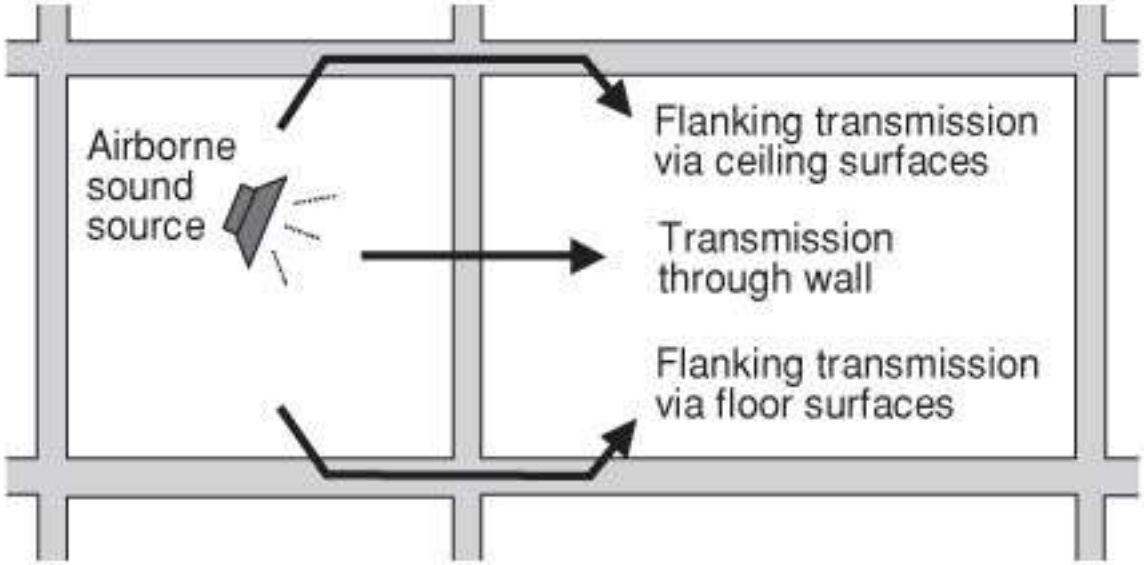

HVAC – Avoid Flanking Paths

Isolate mechanical systems between units

HVAC Design – Avoid

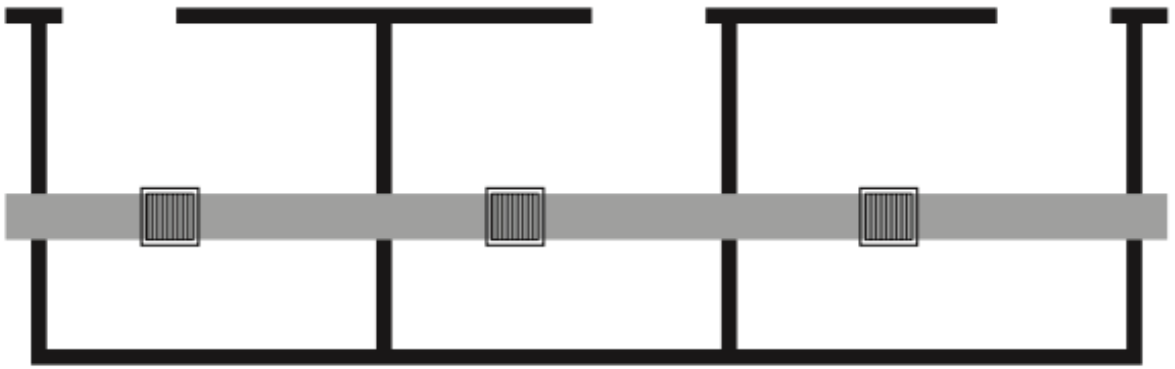

HVAC Design – Better

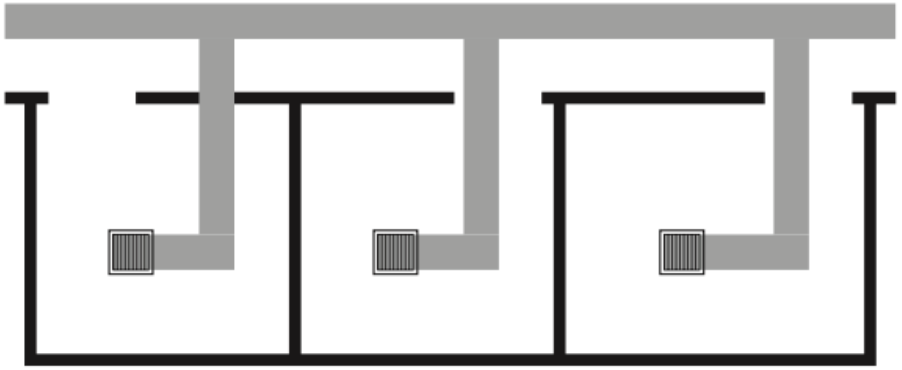

HVAC Design – Recommended

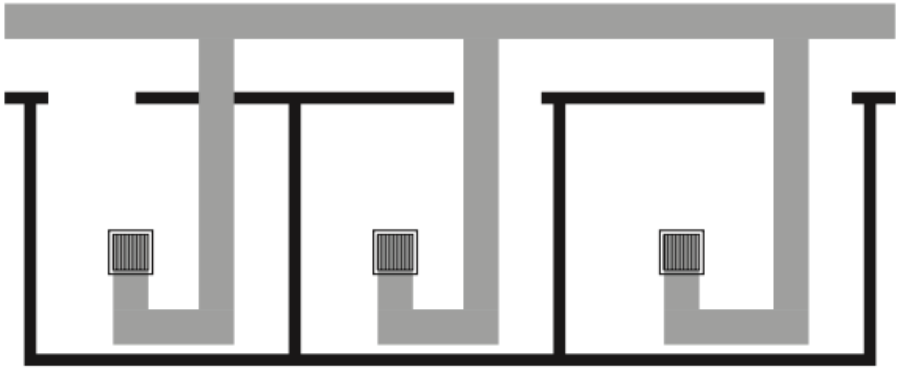

Additional Considerations

Crescent Terminus
Atlanta, GA
Three-building, five-story mixed-use complex with resort-style amenities

Photo Crescent Communities

Outline

- Mid-Rise Construction Types & Life Safety Review
- Structural Design & Detailing Considerations
- Shrinkage Considerations & Detailing
- Acoustic Requirements & Detailing
- Fire Resistive Requirements and Detailing
    - Exterior Walls
    - Floor to Wall Detailing
    - Interior Walls
    - Shaft Walls
    - Corridors & Balconies

Fire Resistance Ratings

Key Differences in Fire Ratings for Construction Types			
	IIIA	IIIB	VA
Exterior (bearing) wall framing	FRT	FRT	non-FRT
Exterior wall fire rating	2 hr	2 hr	1 hr
Interior bearing wall fire rating	1 hr	0 hr	1 hr
Interior non-bearing wall fire rating	0 hr	0 hr	0 hr
Floor assembly fire rating	1 hr	0 hr	1 hr
Fire wall rating	3 hr	3 hr	2 hr

IBC Tables 601 & 706.4

Note: FRT = Fire Retardant Treated

Fire Performance

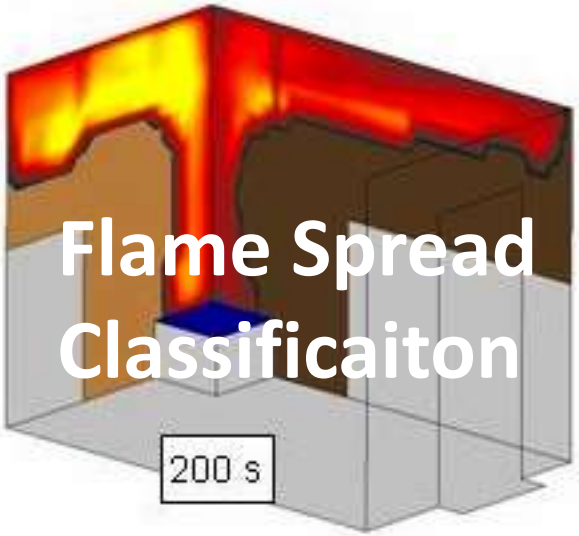

Fire-Resistance Rated Wall Assemblies

Fire-Resistance Rating: The period of time a building element, component or assembly maintains the ability to confine a fire, continues to perform a given structural function, or both, as determined by the tests, or the methods based on tests, prescribed in Section 703.

Tested under a standardized test fire exposure for a given duration to:

1. Prevent the passage of flame and temperature rise from one side to the other
2. Continue to provide vertical structural support when exposed to fire and elevated temperatures

Fire Confinement

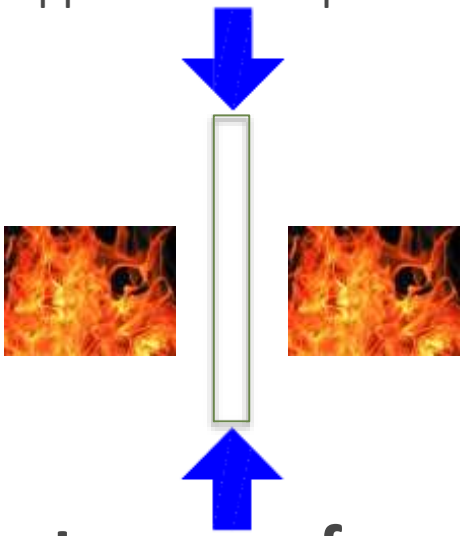

Structural Performance

Fire-Resistance Rated Wall Assemblies

There are five basic types of fire-resistance rated wall assemblies:

- Light Frame Bearing Walls (IBC 704.4.1)
- Exterior Walls (IBC 705)
- Fire Wall or Party Wall (IBC 706)
- Fire Barrier (IBC 707)
- Fire Partition (IBC 708)

Exterior Walls - FSD

Basic assumption is that fires begin at the interior and rated wall assemblies are not required *from* the exterior unless close to another structure.

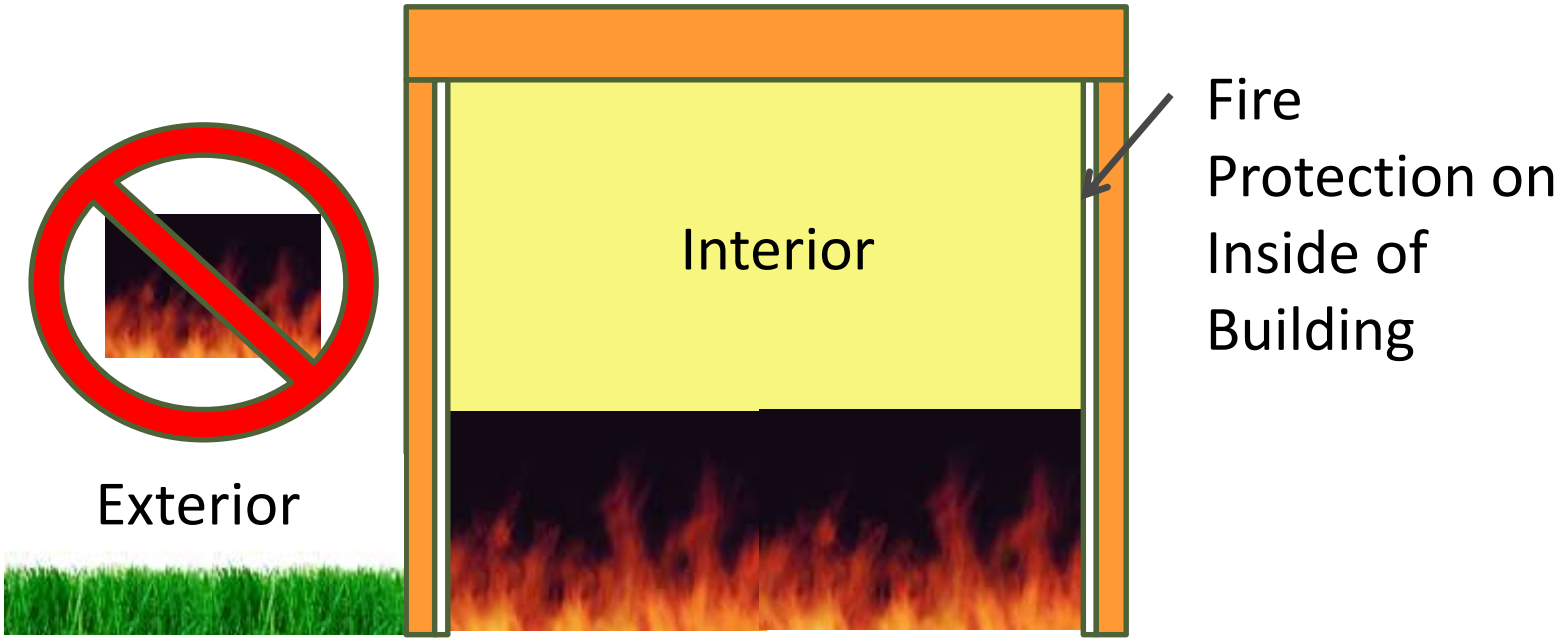

Exterior Walls (IBC 705)

705.5 Fire Resistance Ratings: Exterior walls shall be fire-resistance rated in accordance with Tables 601 and 602 and this section. The required fire-resistance rating of exterior walls with a fire separation distance of greater than 10 feet (3048 mm) shall be rated for exposure to fire from the inside. The required fire-resistance rating of exterior walls with a fire separation distance of less than or equal to 10 feet (3048 mm) shall be rated for exposure to fire from both sides.

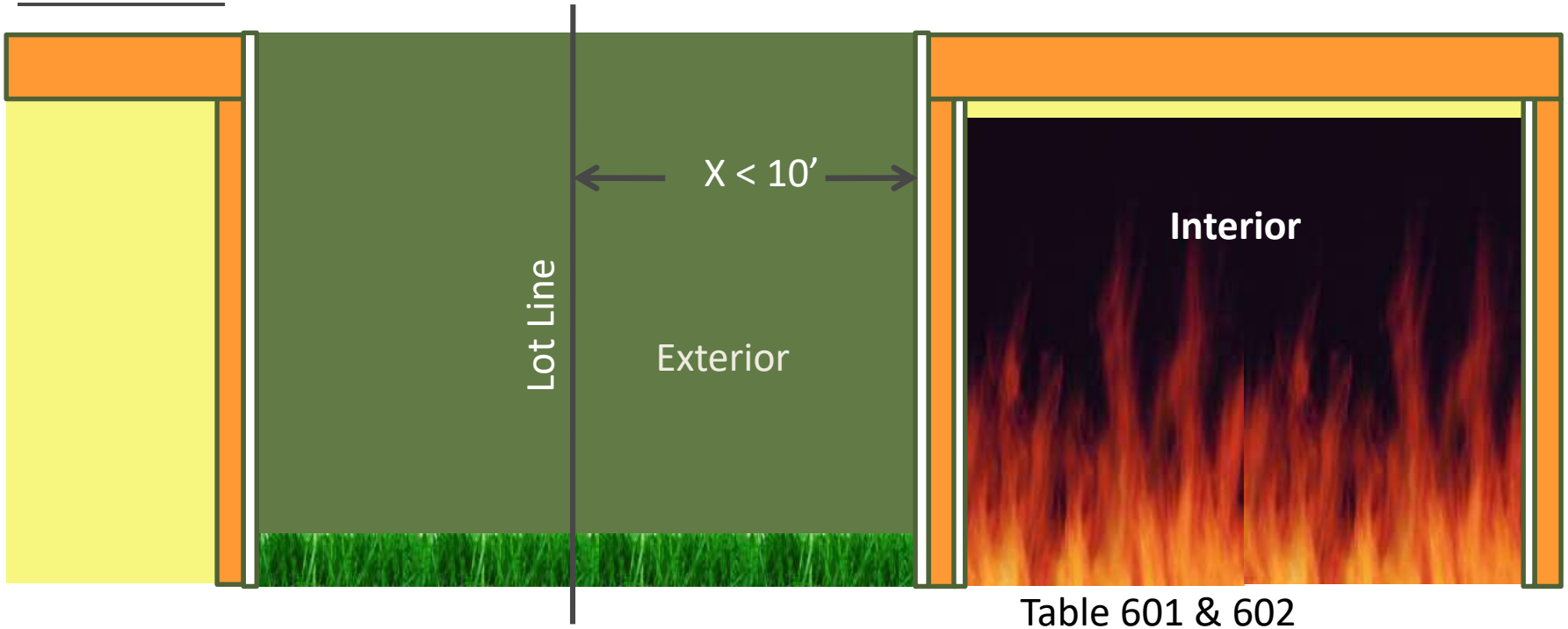

Table 601 & 602

Exterior Wall Fire Resistance

TABLE 601
FIRE-RESISTANCE RATING REQUIREMENTS FOR BUILDING ELEMENTS (HOURS)

BUILDING ELEMENT	TYPE I		TYPE II		TYPE III		TYPE IV	TYPE V	
	A	B	A	B	A	B	HT	A	B
Primary structural frame[f] (see Section 202)	3[a]	2[a]	1	0	1	0	HT	1	0
Bearing walls Exterior[e, f] Interior	 3 3[a]	 2 2[a]	 1 1	 0 0	 2 1	 2 0	 2 1/HT	 1 1	 0 0
Nonbearing walls and partitions Exterior	See Table 602								
Nonbearing walls and partitions Interior[d]	0	0	0	0	0	0	See Section 602.4.6	0	0
Floor construction and associated secondary members (see Section 202)	2	2	1	0	1	0	HT	1	0
Roof construction and associated secondary members (see Section 202)	$1^1/_2$[b]	1[b,c]	1[b,c]	0[c]	1[b,c]	0	HT	1[b,c]	0

TABLE 602
FIRE-RESISTANCE RATING REQUIREMENTS FOR EXTERIOR WALLS BASED ON FIRE SEPARATION DISTANCE[a, d, g]

FIRE SEPARATION DISTANCE = X (feet)	TYPE OF CONSTRUCTION	OCCUPANCY GROUP H[e]	OCCUPANCY GROUP F-1, M, S-1[f]	OCCUPANCY GROUP A, B, E, F-2, I, R, S-2, U[h]
$X < 5$[b]	All	3	2	1
$5 \le X < 10$	IA Others	3 2	2 1	1 1
$10 \le X < 30$	IA, IB IIB, VB Others	2 1 1	1 0 1	1[c] 0 1[c]
$X \ge 30$	All	0	0	0

Exterior Wall – Bearing vs. Non Bearing

Non loading-bearing exterior walls may have lower fire resistance rating requirements than bearing walls in certain situations. IBC Chapter 2 defines load bearing walls as:

[BS] WALL, LOAD-BEARING. Any wall meeting either of the following classifications:

1. Any metal or wood stud wall that supports more than 100 pounds per linear foot (1459 N/m) of vertical load in addition to its own weight.

[BS] **WALL, NONLOAD-BEARING.** Any wall that is not a *load-bearing wall*.

Exterior Wall Fire Ratings

- Using the provisions of section 705.5 and Tables 601 and 602 could result in requiring a 1 hour or 2 hour rating on the inside face of exterior walls, while no rating is required on the exterior face of exterior walls.
- How do we specify such an asymmetric assembly?
- This is where prescriptive code methodology begins to break down: procedural data does not align with requirements. Most building jurisdictions understand that this is a deficiency of the system and will recognize one tested assembly for the outside and a second for the inside.

Exterior Walls - Asymmetry

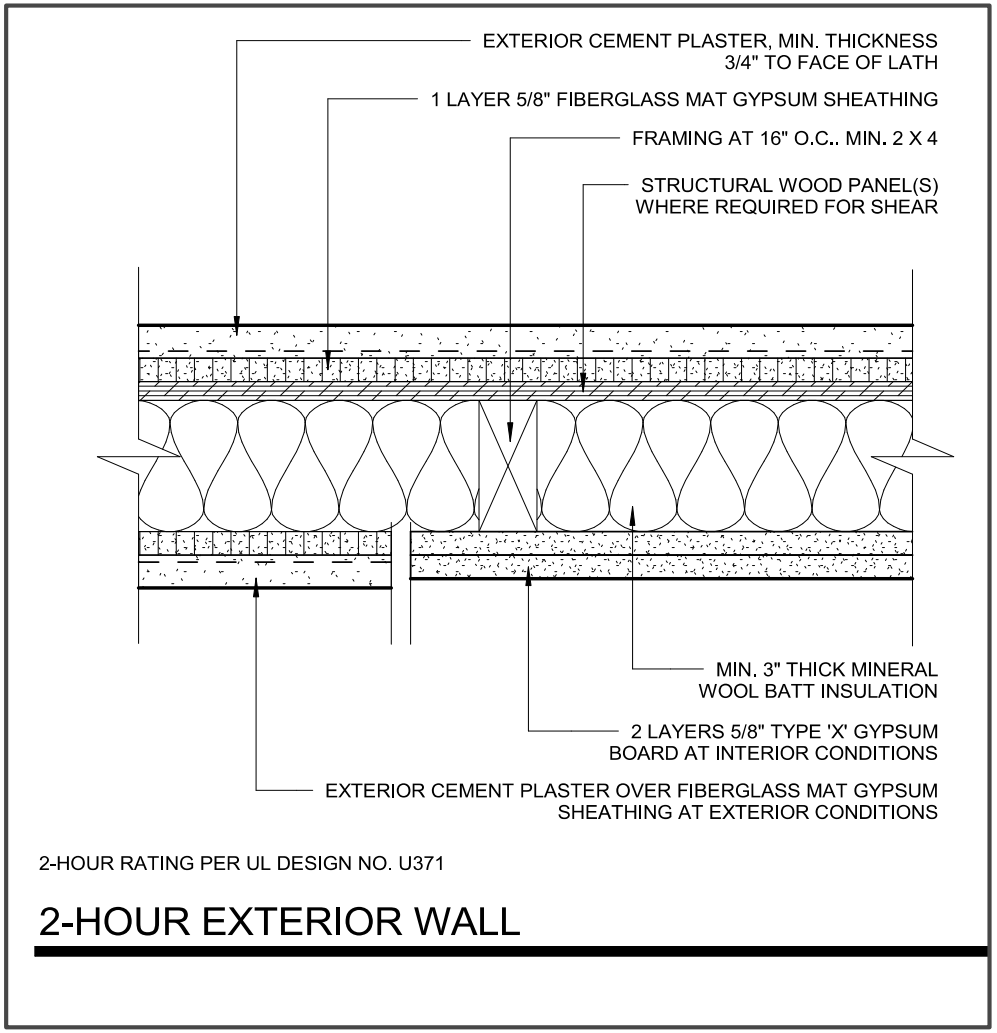

Common issues with tested assemblies:

- Assembly Asymmetry- separate assemblies for each side

Exterior Walls – 1 HR Int. 0 HR Ext.

Design No. U356

September 21, 2015

(Exposed to Fire on Interior Face Only)

Bearing Wall Rating — 1 Hr

Finish Rating — 23 Min or 25 Min (See Item 2C)

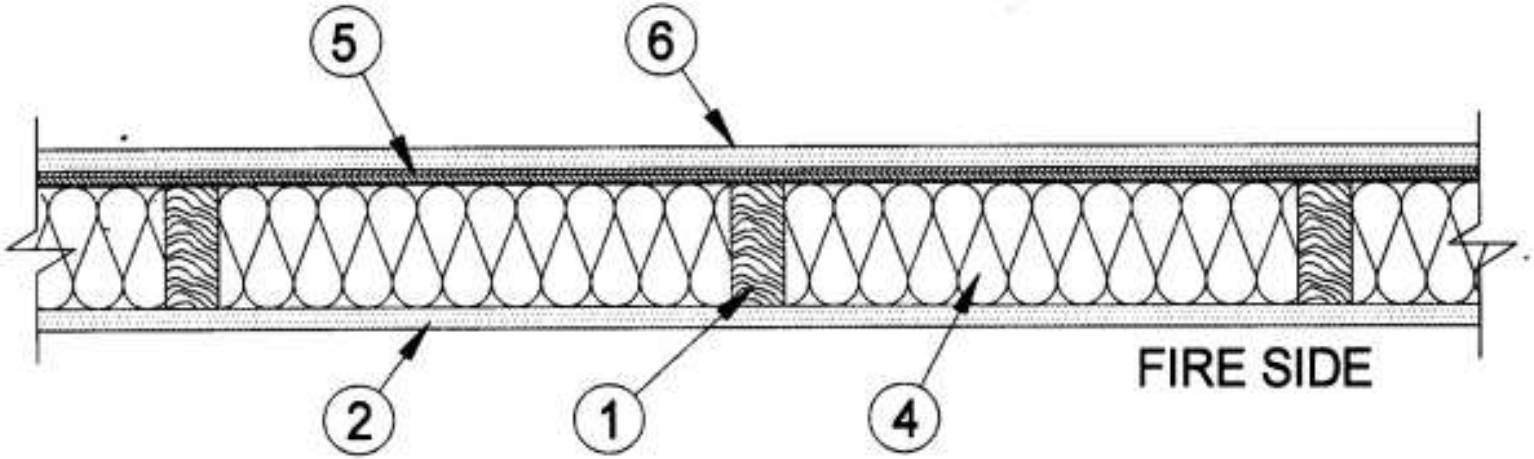

HORIZONTAL SECTION

Exterior Walls – 2 HR Int. 0 HR Ext.

Design No. V314

September 03, 2015

Bearing Wall Rating — 2 Hr

(EXPOSED TO FIRE ON INTERIOR FACE ONLY)

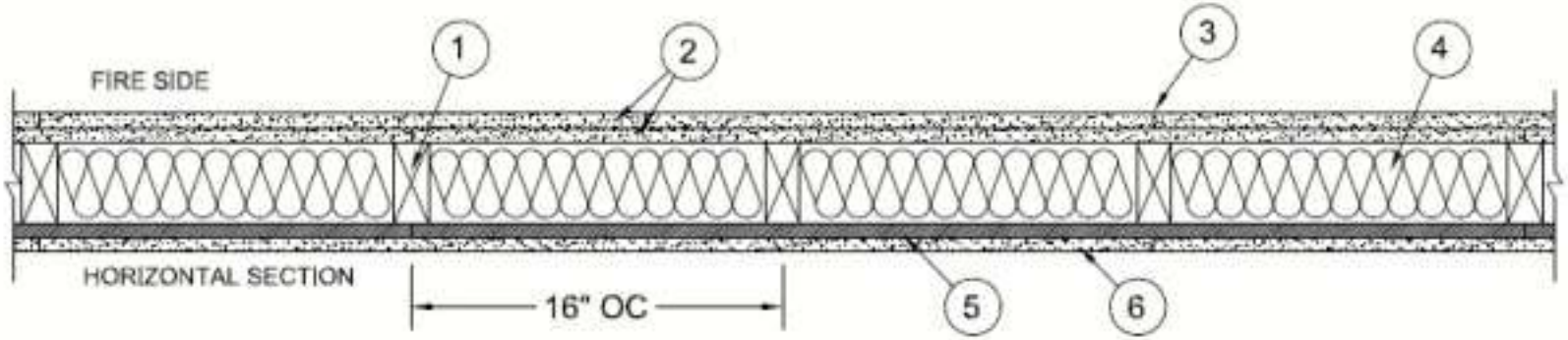

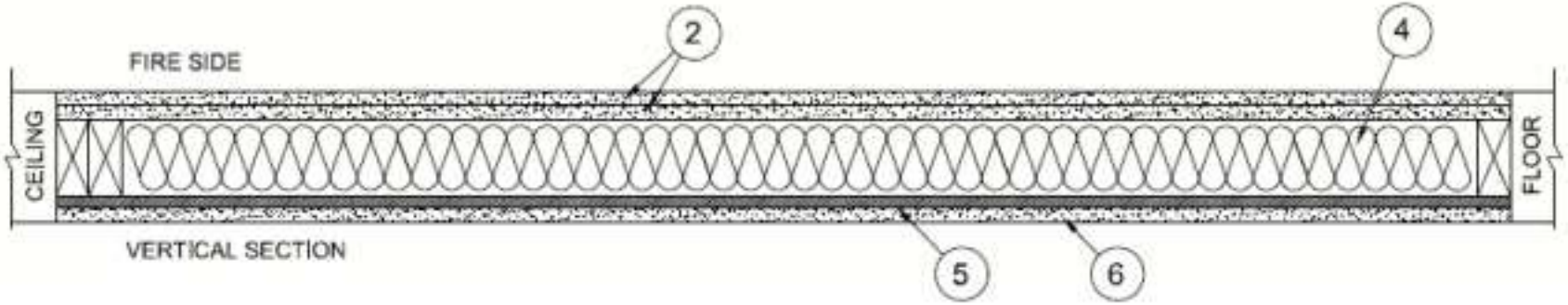

Exterior Walls – 2 HR Int. 0 HR Ext.

Design No. U349

August 21, 2013

Bearing Wall Rating — 2 Hr

(EXPOSED TO FIRE ON INTERIOR FACE ONLY)

For Wood Studs, Finish Rating — 55 min

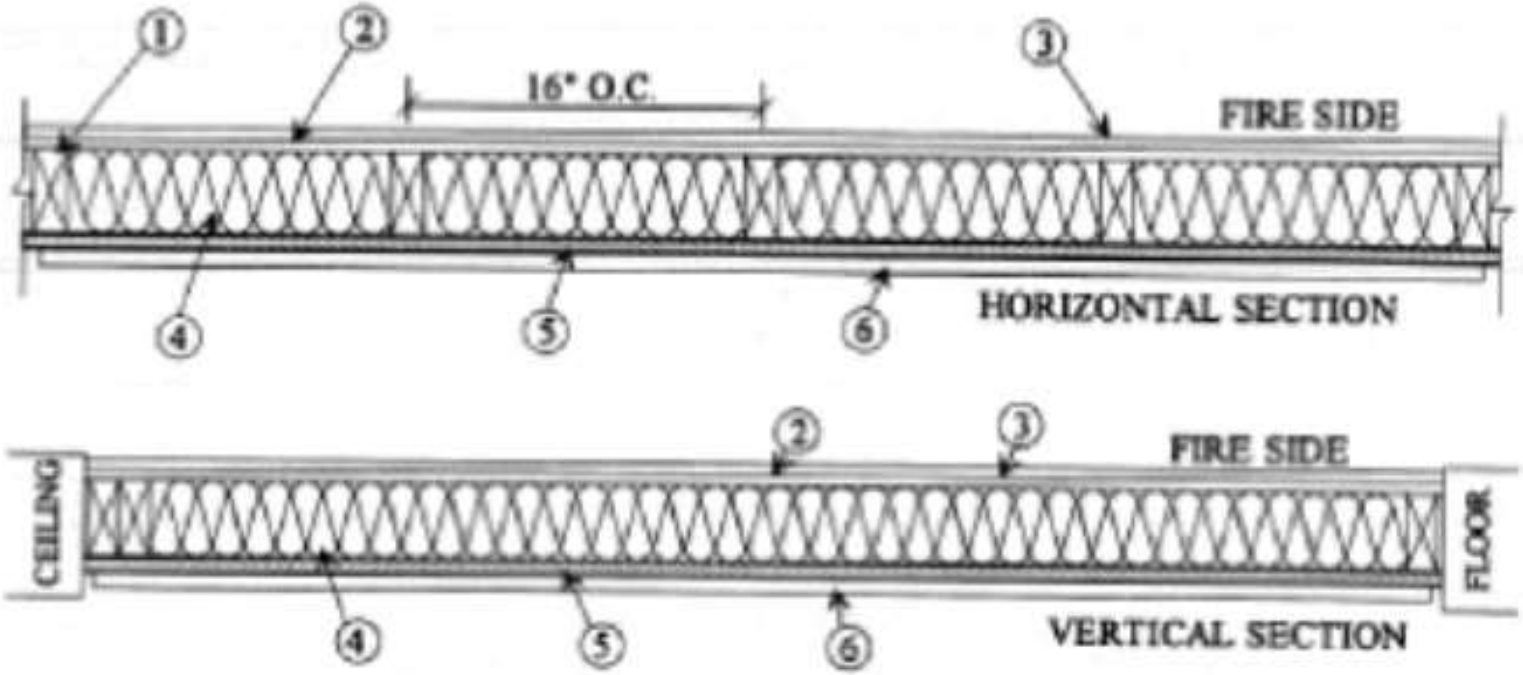

Exterior Walls – 2 HR Int. 1 HR Ext.

Design No. W408

April 01, 2013

Bearing Wall Rating — 2 Hr when EXPOSED TO FIRE ON INTERIOR FACE ONLY

Bearing Wall Rating — 1 Hr when EXPOSED TO FIRE ON EXTERIOR FACE ONLY, see Item 4 and 6

For Wood Studs, Finish Rating — 50 min when EXPOSED TO FIRE ON INTERIOR FACE.

For Wood Studs, Finish Rating — 17 min when EXPOSED TO FIRE ON EXTERIOR FACE.

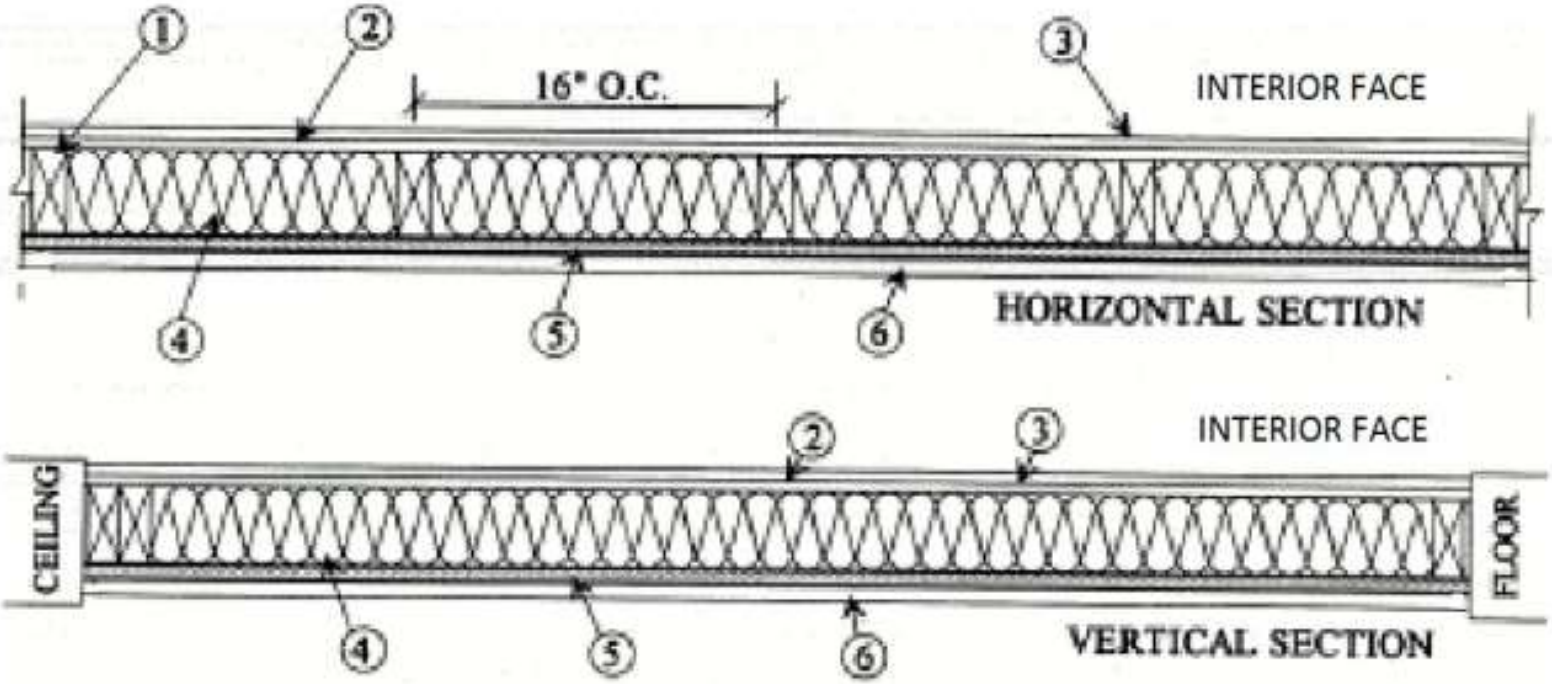

Choosing Fire Rated Assemblies

Common tested assemblies (ASTM E119) per IBC 703.2:

- UL Listings
- Gypsum Catalog
- Proprietary Manufacturer Tests
- Industry Documents: such as AWC's DCA3

Alternate Methods per IBC 703.3

- Prescriptive designs per IBC 721.1
- Calculated Fire Resistance per IBC 722
- Fire-resistance designs documented in sources
- Engineering analysis based on a comparison
- Fire-resistance designs certified by an approved agency

Exterior Walls – Structural Stability

705.6 Structural Stability:
The wall shall extend to the height required by Section 705.11 ~~and shall have sufficient structural stability such that it will remain in place for the duration of time indicated by the required fire-resistance rating~~. Where exterior walls have a minimum fire separation distance of not less than 30 feet (9144 mm), interior structural elements which brace the exterior wall but which are not located within the plane of the exterior wall shall have the minimum fire-resistance rating required in Table 601 for that structural element. Structural elements which brace the exterior wall but are located outside of the exterior wall or within the plane of the exterior wall shall have the minimum fire-resistance rating required in Tables 601 and 602 for the exterior wall.

Exterior Walls – Vertical Offsets

There is no requirement for an exterior wall to extend to the foundation in a stepped building.

Posts, beams or walls, that support a rated exterior wall must be fire – resistance rated not less than the rating of the supported wall (IBC 704.1)

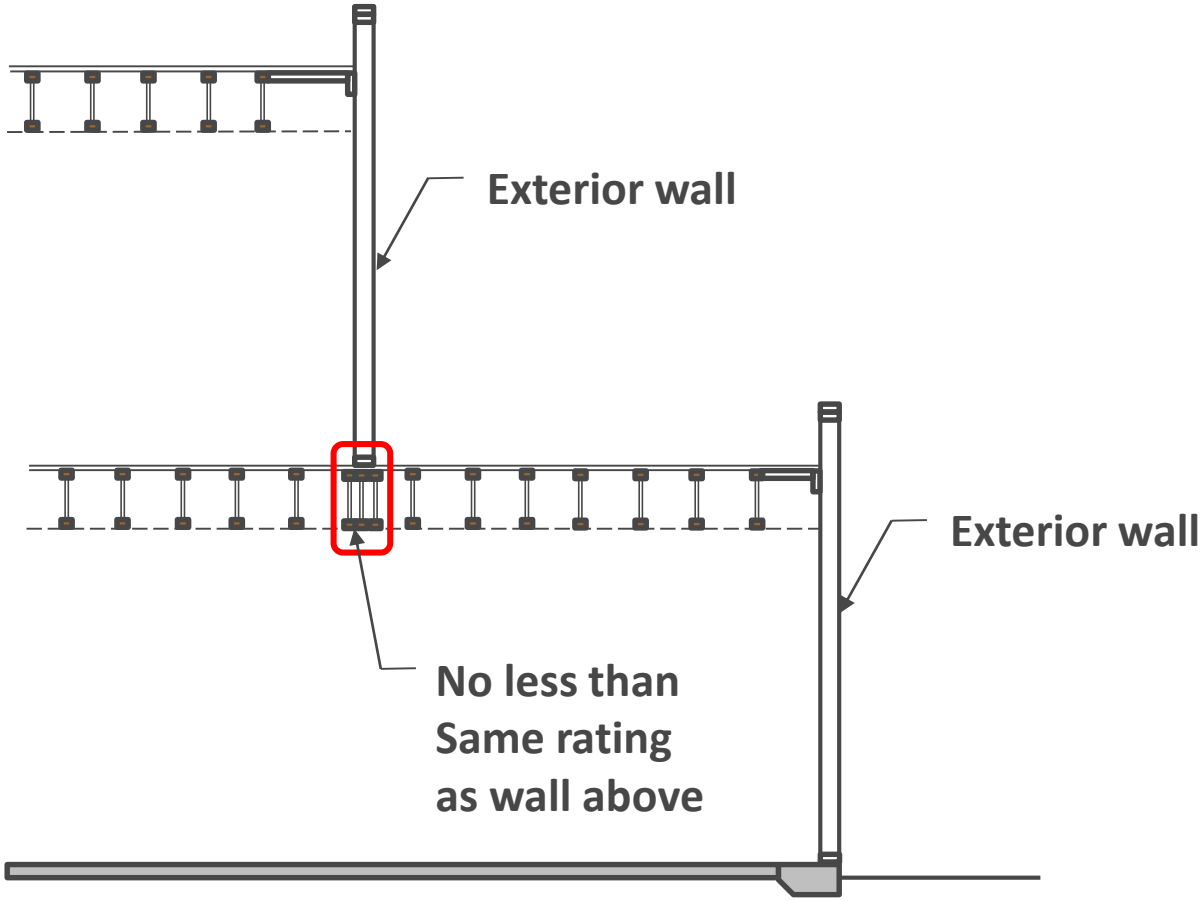

Exterior Walls – Addition of WSP

Can include WSP in assemblies which were tested without them:

- ESR 2586
- AWC's DCA4
- Gypsum Association Manual

GA Fire Resistance Design Manual item 23 in Section 1 of the General Explanatory Notes:

"*When not specified as a component of a fire- resistance rated wall or partition system, wood structural panels shall be permitted to be added to one or both sides.*"

ESR 2586:

4.7 Fire-resistive Construction:

Structural-use panels may be installed between the fire protection and the wood studs on either the interior or exterior side of fire-resistance-rated wood frame wall and partition assemblies described in the applicable code, provided the length of fasteners is adjusted for the added thickness of the panel.

Component Additive Method (CAM) for Calculating and Demonstrating Assembly Fire Resistance

Wood-frame walls and floors offer designers a unique opportunity to provide structures with economy as well as proven energy performance. Where these assemblies are required by the building codes to

veloped from conducting a series of fire resistance tests. The Component Additive Method (CAM) provides for calculating the fire resistance of load bearing and non-load bearing floor, wall, ceiling and roof

Exterior Walls – Using FRT Studs

ONLINE CERTIFICATIONS DIRECTORY

Home Quick Guide Contact Us UL.com

BXUV.GuideInfo
Fire Resistance Ratings - ANSI/UL 263

View Listings

Page Bottom

Guide Information

The Design Inform

I. INTRODU

II. GENERA

III. FLOOR-

IV. BEAMS

V. COLUMNS

VI. WALLS AND PARTITIONS

"Wood stud walls may contain fire-retardant-treated studs as well as untreated wood studs. The use of fire-retardant-treated plywood (wood structural panels) may be used in Designs that contain use of untreated plywood when all other specified attributes are equivalent to the wood structural panel used in the Design."

Outline

- Mid-Rise Construction Types & Life Safety Review
- Structural Design & Detailing Considerations
- Shrinkage Considerations & Detailing
- Acoustic Requirements & Detailing
- Fire Resistive Requirements and Detailing
  - Exterior Walls
  - Floor to Wall Detailing
  - Interior Walls
  - Shaft Walls
  - Corridors & Balconies

Intersection of Assemblies - Ratings

Key Differences in Fire Ratings for Construction Types			
	IIIA	IIIB	VA
Exterior (bearing) wall framing	FRT	FRT	non-FRT
Exterior wall fire rating	2 hr	2 hr	1 hr
Floor assembly fire rating	1 hr	0 hr	1 hr
Fire wall rating	3 hr	3 hr	2 hr

IBC Tables 601 & 706.4

Note: FRT = Fire Retardant Treated

Intersection of Tested Assemblies

2 Hour Wall

Design No. U301

May 20, 2015

Bearing Wall Rating — 2 HR.

Finish Rating — 66 Min.

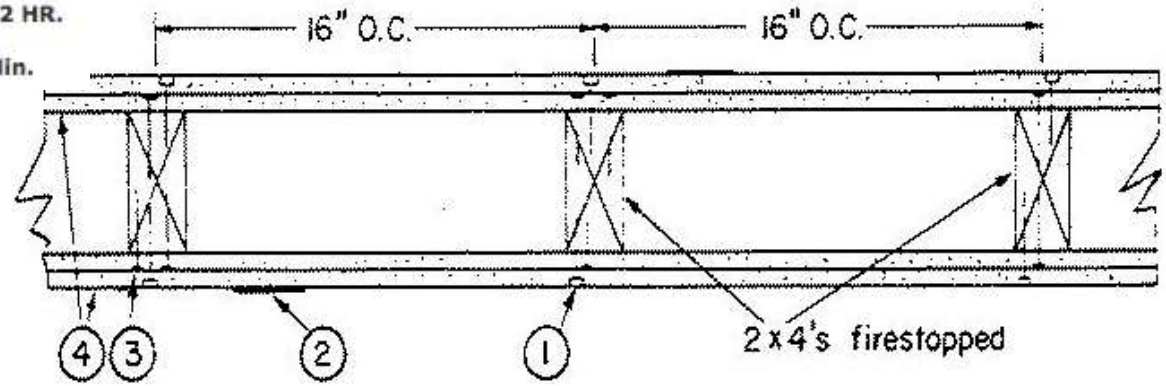

GA FILE NO. WP 4135	GENERIC	2 HOUR FIRE	40 to 44 STC SOUND

GYPSUM WALLBOARD, WOOD STUDS

Base layer 5/8" type X gypsum wallboard or gypsum veneer base applied at right angles to each side of 2 x 4 wood studs 24" o.c. with 6d coated nails, 1 7/8" long, 0.085" shank, 1/4" heads, 24" o.c. **Face** layer 5/8" type X gypsum wallboard or gypsum veneer base applied at right angles to each side with 8d coated nails, 2 3/8" long, 0.100" shank, 1/4" heads, 8" o.c.

Joints staggered 24" each layer and side. Sound tested with studs 16" o.c. and with nails for **base** layer spaced 6" o.c. **(LOAD-BEARING)**

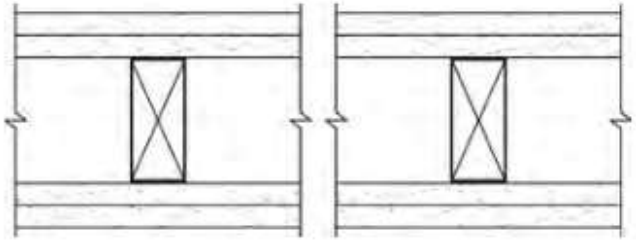

Thickness:	6 1/8"
Approx. Weight:	12 psf
Fire Test:	FM WP 360, 9-27-74
Sound Test:	NGC 2363, 4-1-70

Intersection of Tested Assemblies

1 Hour Floor

Design No. L550

August 27, 2015

Unrestrained Assembly Rating — 1 Hr.

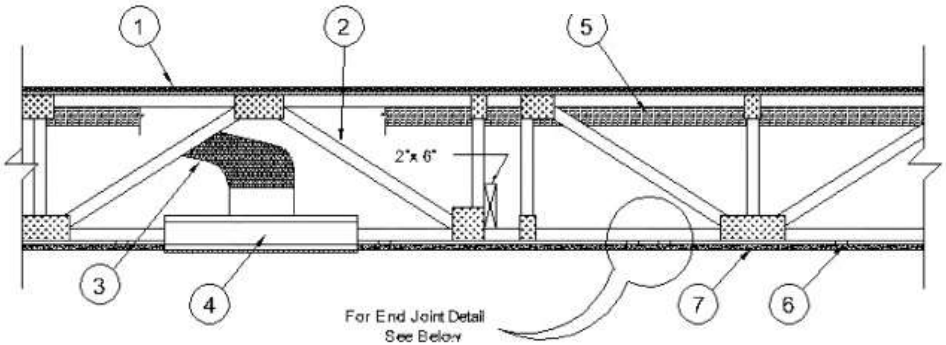

FLOOR-CEILING SYSTEMS, WOOD FRAMED

GA FILE NO. FC 5111	GENERIC	1 HOUR FIRE	50 to 54 STC SOUND

WOOD I-JOISTS, GYPSUM WALLBOARD, RESILIENT CHANNELS

Base layer 1/2" type X gypsum wallboard applied at right angles to resilient channels 16" o.c. with 1 1/4" Type S drywall screws 12" o.c. Resilient channels applied at right angles to minimum 9 1/2" deep wood I-joists, with minimum 1 1/4" deep x 1 1/2" wide flanges and minimum 3/8" webs, 24" o.c. with 1 1/4" Type W drywall screws. **Face** layer 1/2" type X gypsum wallboard applied at right angles to channels with 1 5/8" Type S drywall screws 12" o.c. Face layer end joints located midway between channels and attached to base layer with 1 1/2" Type G screws 12" o.c. Edge joints offset 24" from base layer edge joints. Wood I-joists supporting 5/8" oriented strand board applied at right angles to I-joists with 8d common nails 12" o.c.

STC and IIC tested with 40 oz carpet over 1/4" foam pad.

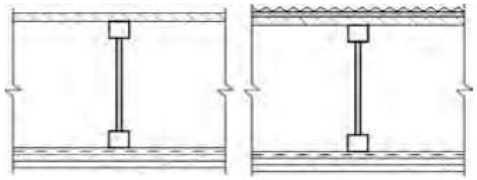

Approx. Ceiling Weight:	5 psf
Fire Test:	NRCC A-4440.1 (Revised), 6-24-97
Sound Test:	NRCC B-3150.2, 6-30-00
IIC & Test:	(68 C & P) NRCC B-3150.2, 6-30-00

Intersection of Tested Assemblies

- Many options are available for fire resistance tested floor assemblies and wall assemblies
- No tested intersection details exist
- We must understand the <u>intent</u> of the code, provide a rationale that meets the code's intent, and utilize available information and testing results

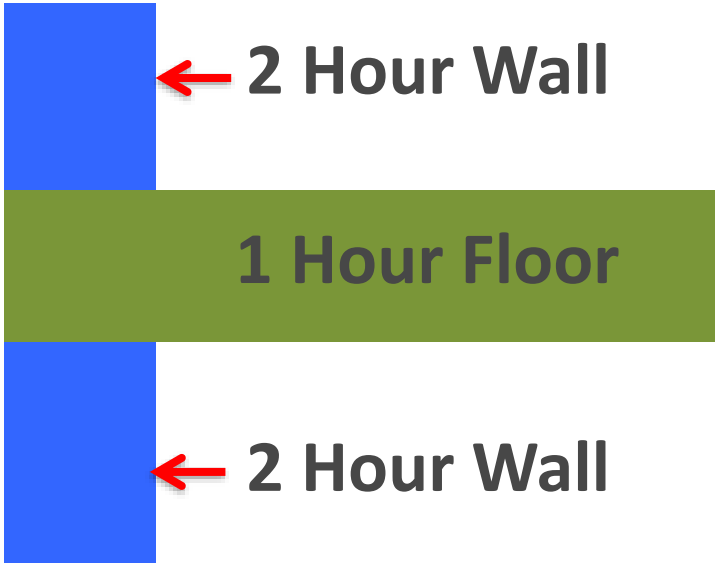

Type III Exterior Walls – FRT

Type III and IV Construction - IBC Section 602.3:
Fire-retardant-treated wood framing complying with Section 2303.2 shall be permitted within exterior wall assemblies of a 2-hour rating or less

What does this FRTW requirement include?

- Wall Framing (Studs & Plates) – Yes
- Wall Sheathing – Yes

Floor sheathing?
Rim Joist?
Floor Joists?
Everything in the plane of the wall?
Or only wall framing?

Exterior Walls – Intersecting Floors

Some jurisdictions interpret the allowance of FRT framing in exterior walls of type III construction as not including FRT wall sheathing. The inclusion of wall sheathing is intended in the allowance of FRT framing.

Several code change proposals are in place which clarify this

G 175-15

602.3, 602.4.1

2015 International Building Code

Revise as follows:

602.3 Type III. Type III construction is that type of construction in which the exterior walls are of noncombustible materials and the interior building elements are of any material permitted by this code. *Fire-retardant-treated wood* framing and sheathing complying with Section 2303.2 shall be permitted within *exterior wall* assemblies of a 2-hour rating or less.

602.4.1 Fire-retardant-treated wood in exterior walls. *Fire-retardant-treated wood* framing and sheathing complying with Section 2303.2 shall be permitted within exterior wall assemblies with a 2-hour rating or less.

Reason: The word framing creates some confusion. some have interpreted that framing does not include the sheathing utilized for lateral resistance to be framing. This has resulted in at least one interpretation that the walls cannot have FRT structural wood panel framing and yet another interpretation that the structural wood panel is permitted to be installed but unlike the studs does not need to be FRT.
ASCE considers sheathing to be part of the framing system. The ICC ES has AQ for a product equivalent to FRT plywood for use on Type III construction.

The addition of sheathing clarifies wood framing and sheathing is permitted to be within the assembly if FRT.

Exterior Walls – Intersecting Floors

Please note that the following details are examples of what we have seen used on projects and do not necessarily represent details that will be accepted and applicable in all jurisdictions and to all projects.

These details are not intended as recommendations for universally accepted details. Local product availability and manufacturer specifications should also be considered for each project.

The Architect of Record and Engineer of Record should verify acceptance of the details used on their project with all provisions of the building code, including local amendments, with the local Authority Having Jurisdiction.

Exterior Walls – Intersecting Floors

Type III Construction – 2 HR Wall, 1 HR Floor
Typical Platform Framing

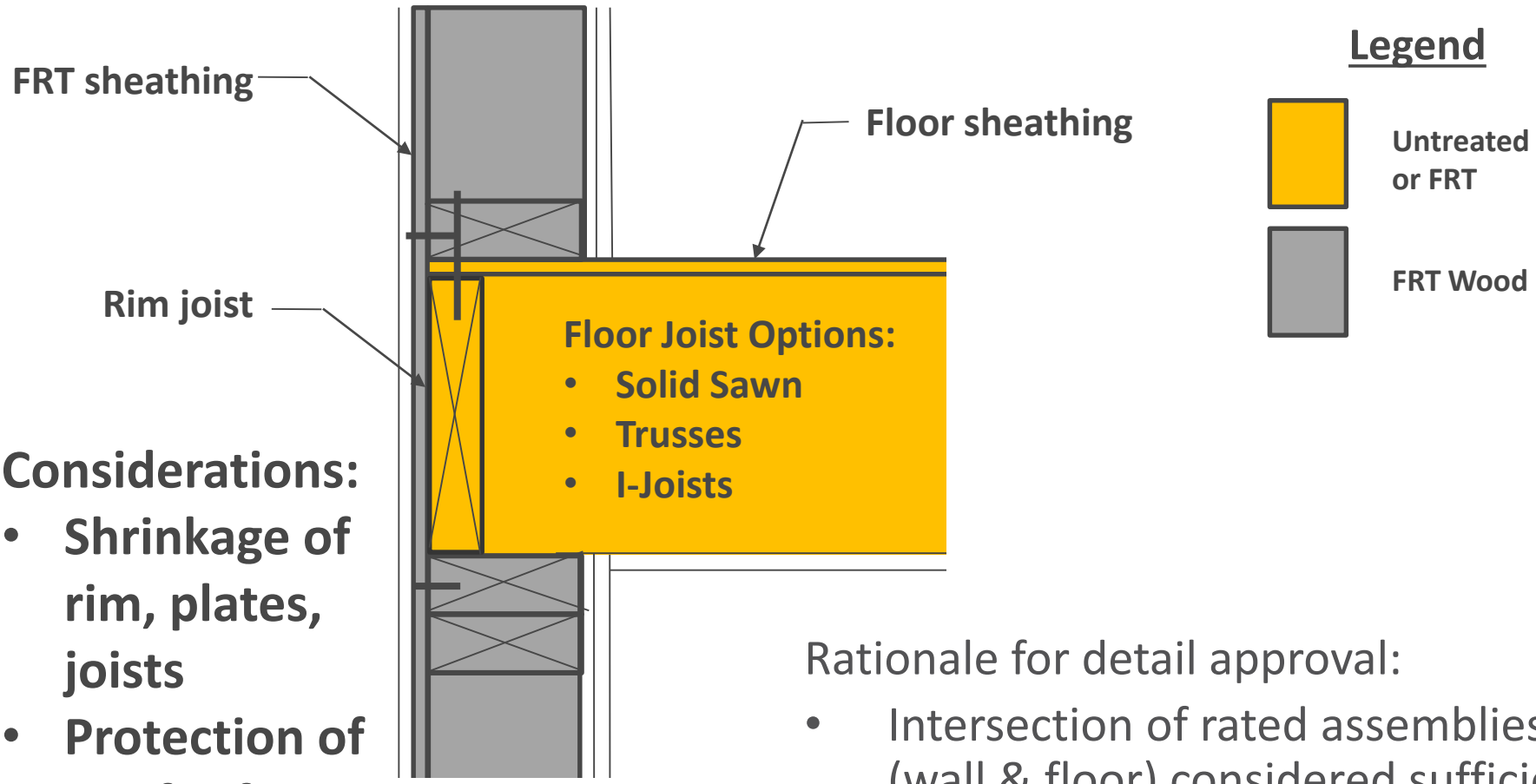

Considerations:

- **Shrinkage of rim, plates, joists**
- **Protection of rim for fire**

Rationale for detail approval:

- Intersection of rated assemblies (wall & floor) considered sufficient

Exterior Walls – Intersecting Floors

Type III Construction – 2 HR Wall, 1 HR Floor

Typical Platform Framing

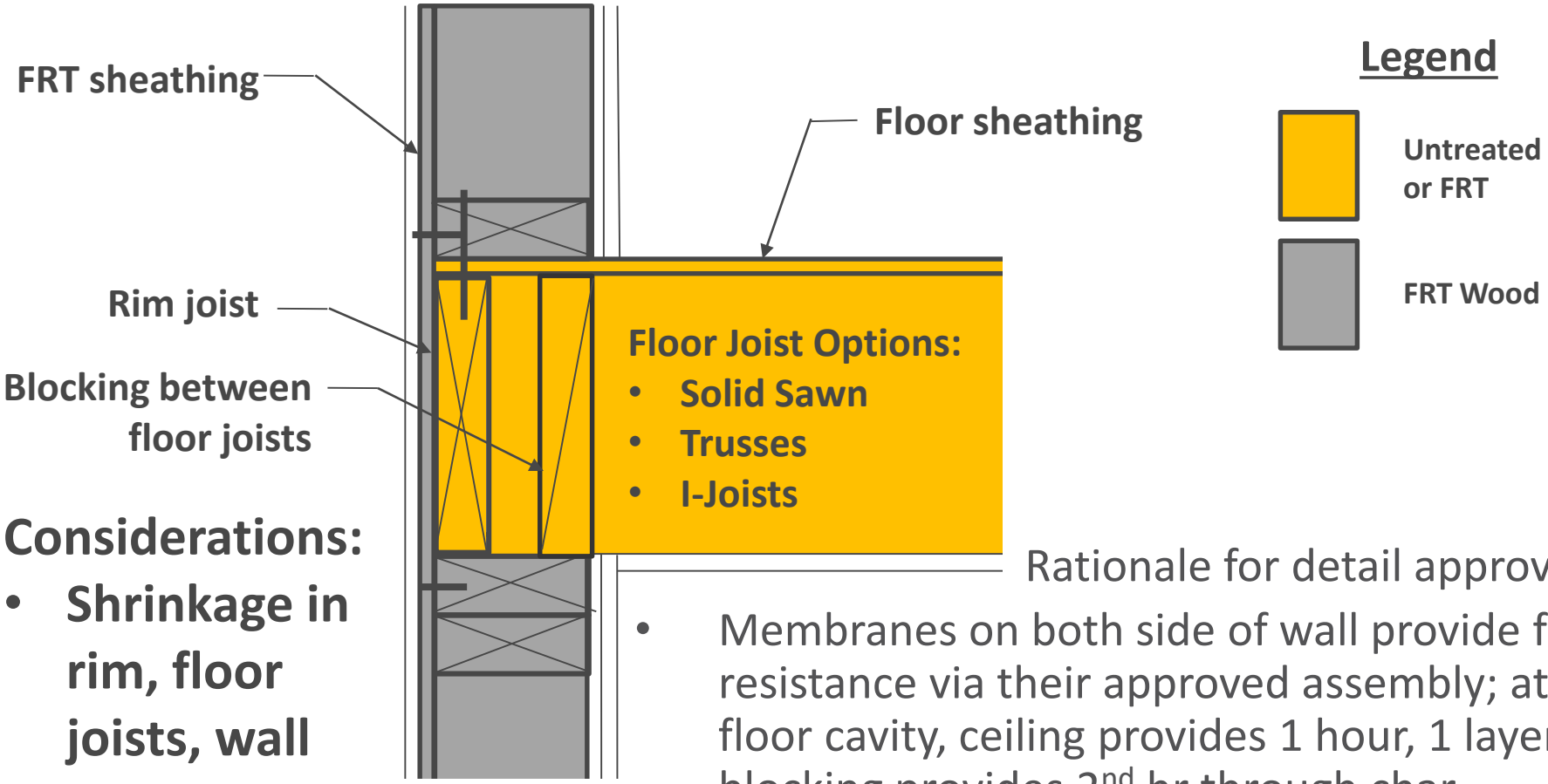

Considerations:

- **Shrinkage in rim, floor joists, wall plates**

Rationale for detail approval:

- Membranes on both side of wall provide fire resistance via their approved assembly; at floor cavity, ceiling provides 1 hour, 1 layer of blocking provides 2nd hr through char calculations

Exterior Walls – Intersecting Floors

Type III Construction – 2 HR Wall, 1 HR Floor
Typical Platform Framing

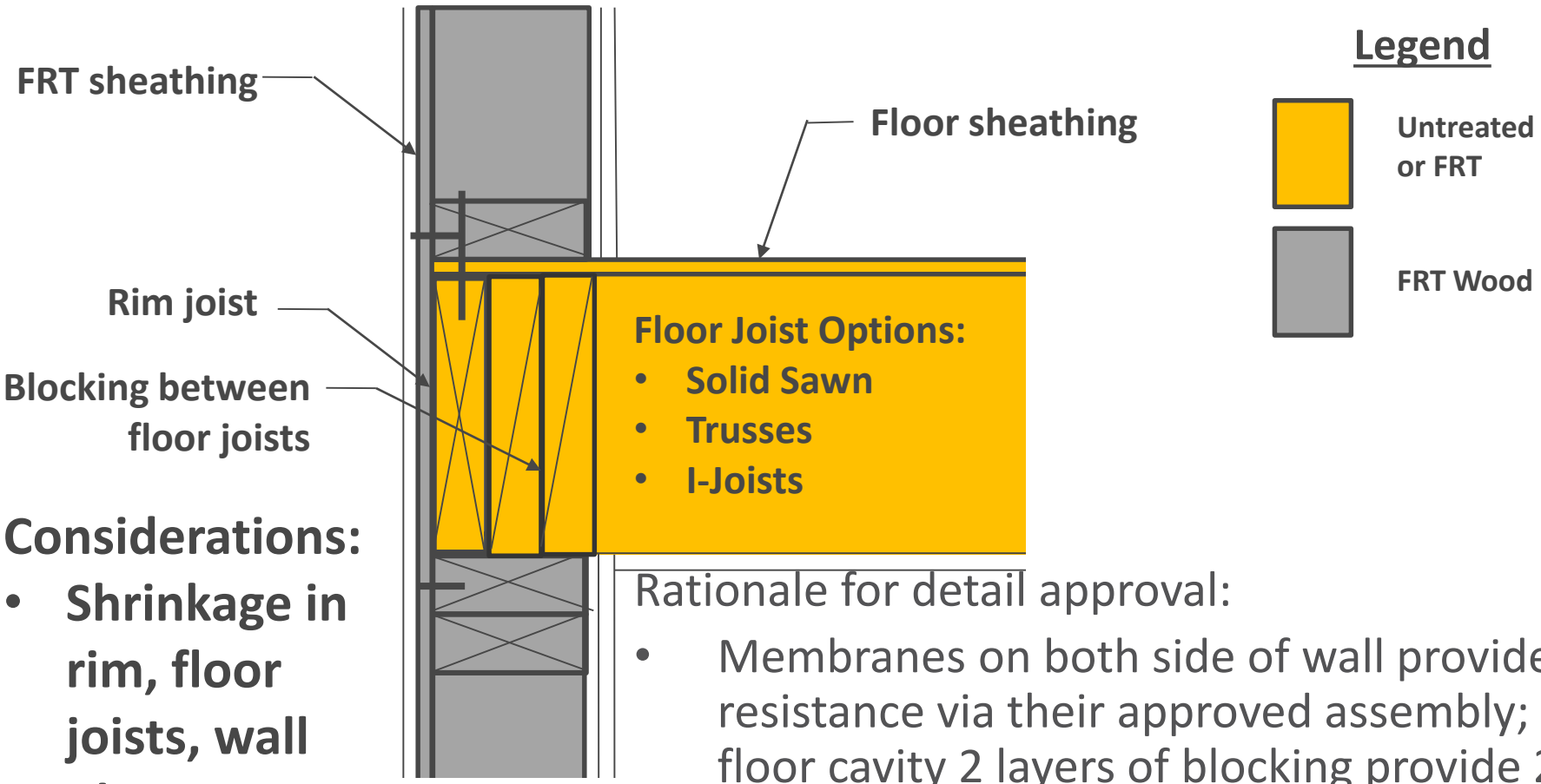

Considerations:

- **Shrinkage in rim, floor joists, wall plates**

Rationale for detail approval:

- Membranes on both side of wall provide fire resistance via their approved assembly; at floor cavity 2 layers of blocking provide 2 hr protection through char calculations

Exterior Walls – Intersecting Floors

Type III Construction – 2 HR Wall, 1 HR Floor
Modified Platform Framing

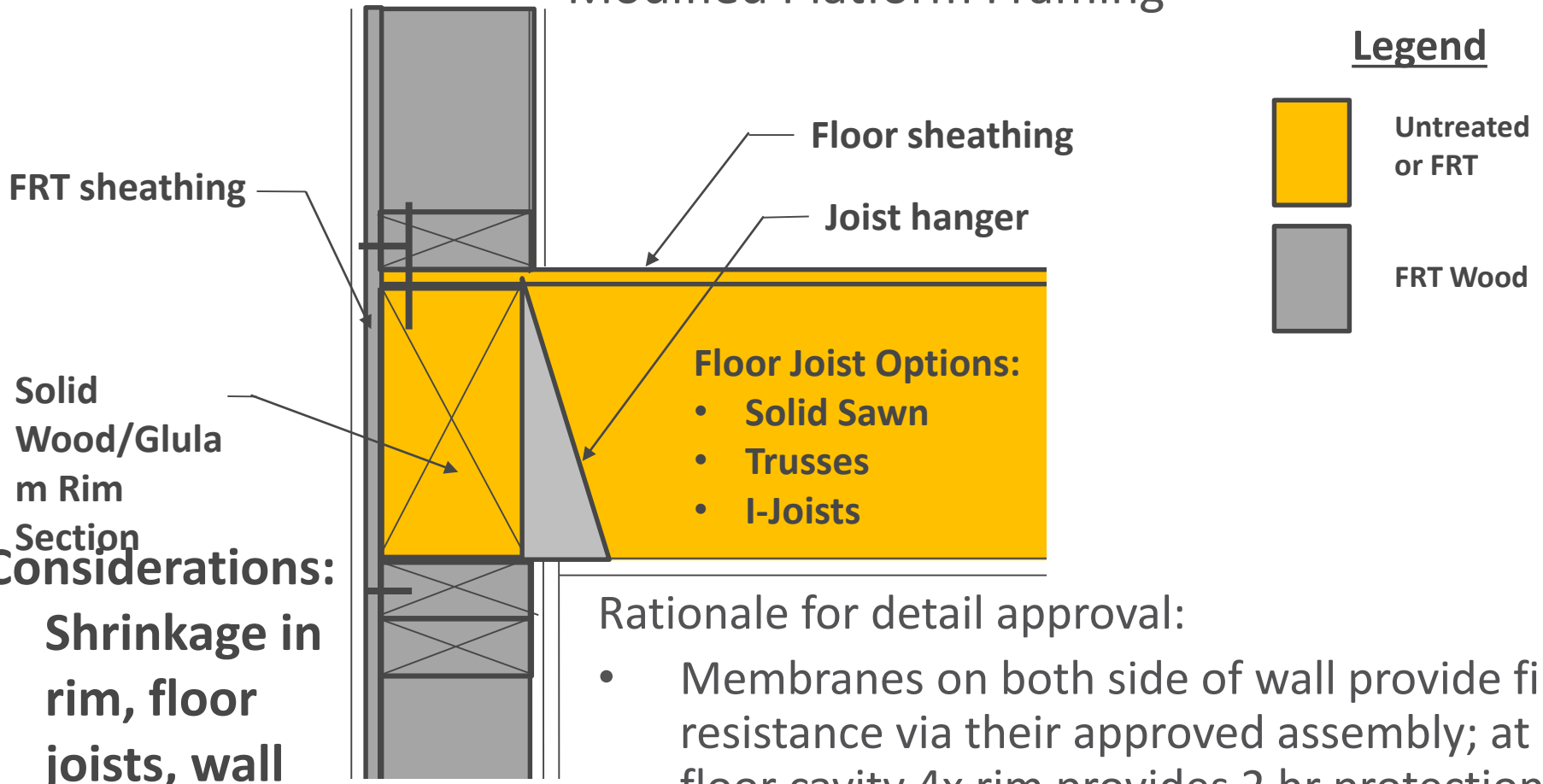

Considerations:

- **Shrinkage in rim, floor joists, wall plates**

Rationale for detail approval:

- Membranes on both side of wall provide fire resistance via their approved assembly; at floor cavity 4x rim provides 2 hr protection through char calculations

Calculated Fire Resistance of Wood

For Exposed Wood Members: IBC 722.1 References AWC's NDS Chapter 16 (AWC's TR 10 is a design aid to NDS Chapter 16)

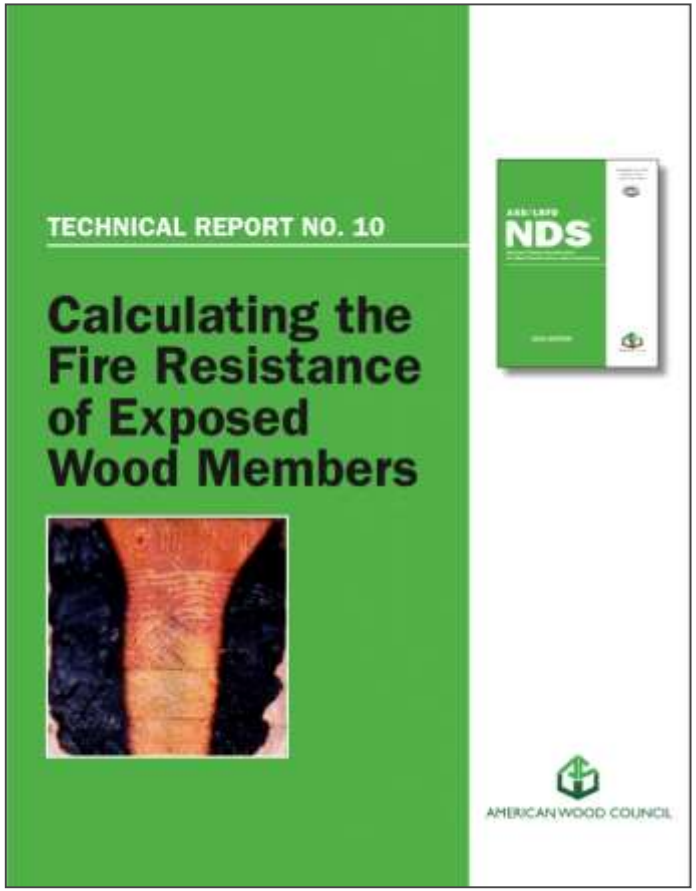

Equations for Calculating Fire Endurance

- Assumptions
  - Nominal assumed char rate = 1.5”/hr.
  - Uses ultimate strength for design check
- Structurally spanning members: reduced section checked for capacity vs. demand

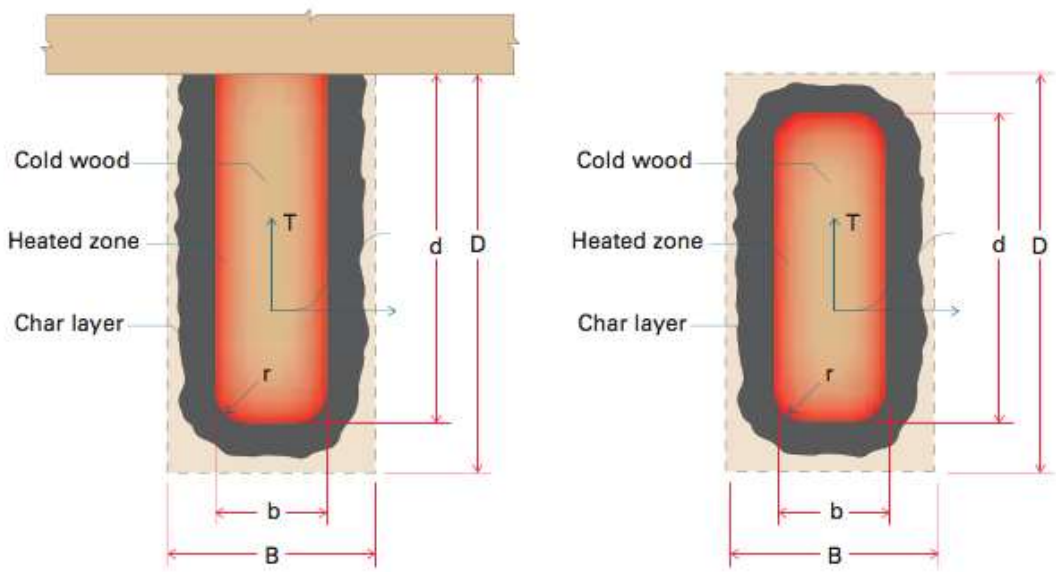

Figure 1-1 Reduction in member breadth and depth over time, t

Source: AWC’s TR 10

Equations for Calculating Fire Endurance

ACCOUNTS FOR NON-CHARRED STRENGTH RED'N

$$\beta_{eff} = \frac{1.2\beta_n}{t^{0.187}}$$

CHAR SLOWS WITH TIME-NON LINEAR

β_{eff} = Effective char rate (in/hr), adjusted for exposure time, t

β_n = Nominal char rate (in/hr), linear char rate based on a 1-hour exposure (1.5"/hr.)

t = Exposure time (hrs)

Exterior Walls – Intersecting Floors

Type III Construction – 2 HR Wall, 1 HR Floor
Modified Platform Framing

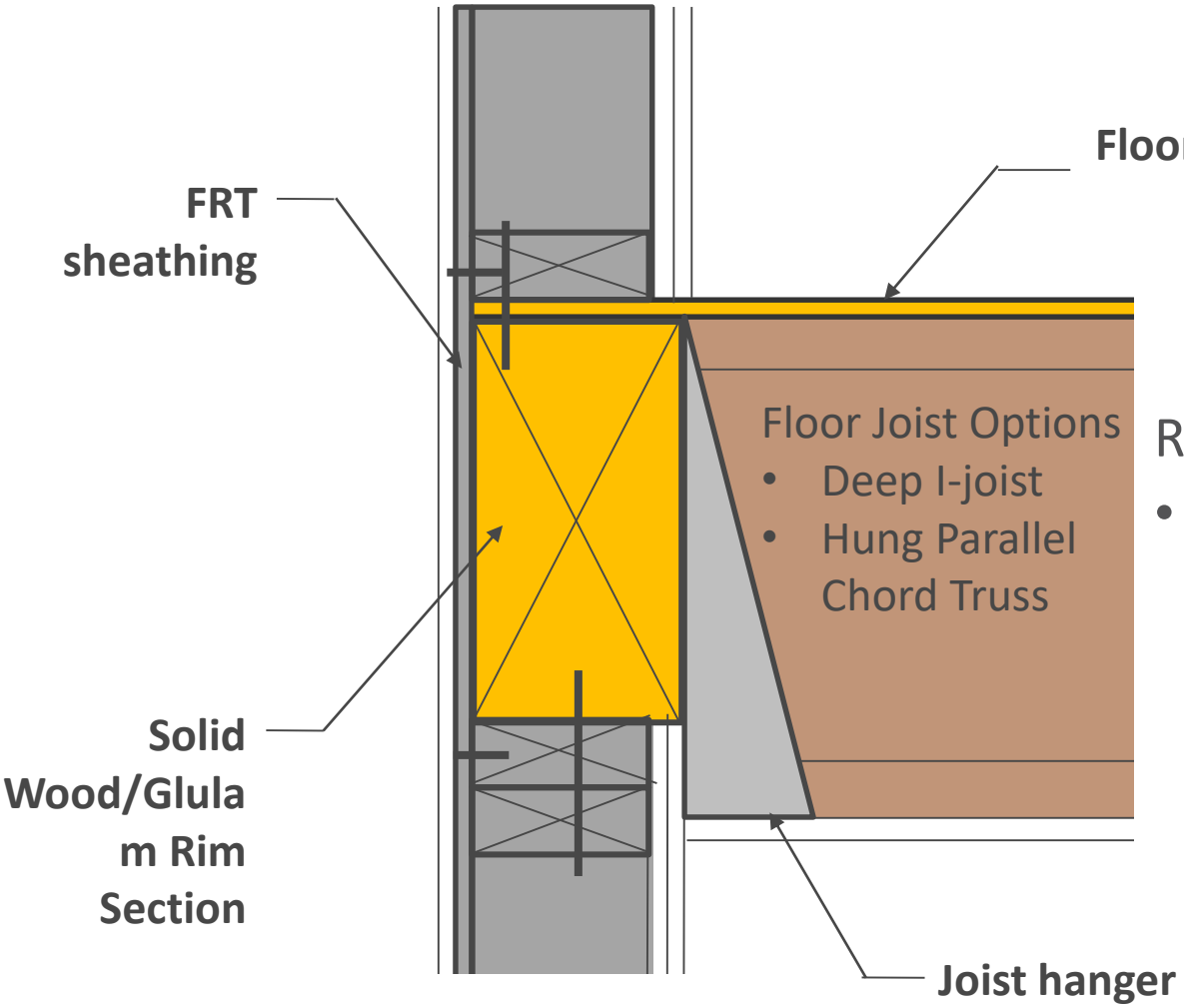

Legend

- Untreated or FRT
- FRT Wood
- Untreated

Rationale for detail approval:

- Membranes on both side of wall provide fire resistance via their approved assembly; at floor cavity 4x rim provides 2 hr protection through char calculations

Exterior Walls – Intersecting Floors

Type III Construction – 2 HR Wall, 1 HR Floor
Semi-Balloon Framing

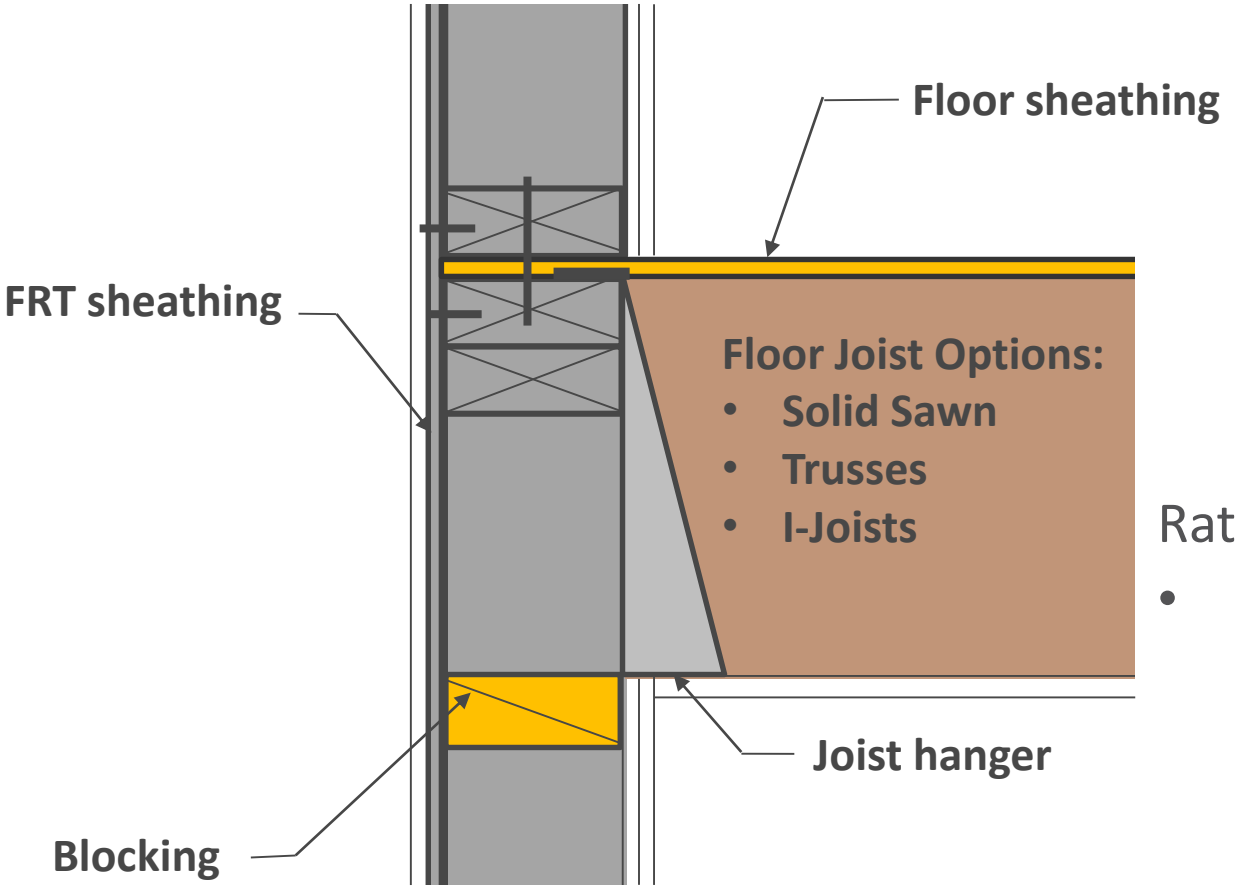

Legend

- Untreated or FRT
- FRT Wood
- Untreated

Rationale for detail approval:

- Intersection of rated assemblies (wall & floor) considered sufficient

Exterior Walls – Intersecting Floors

Type III Construction – 2 HR Wall, 1 HR Floor
Semi-Balloon Framing w/Add'l Fire Protection

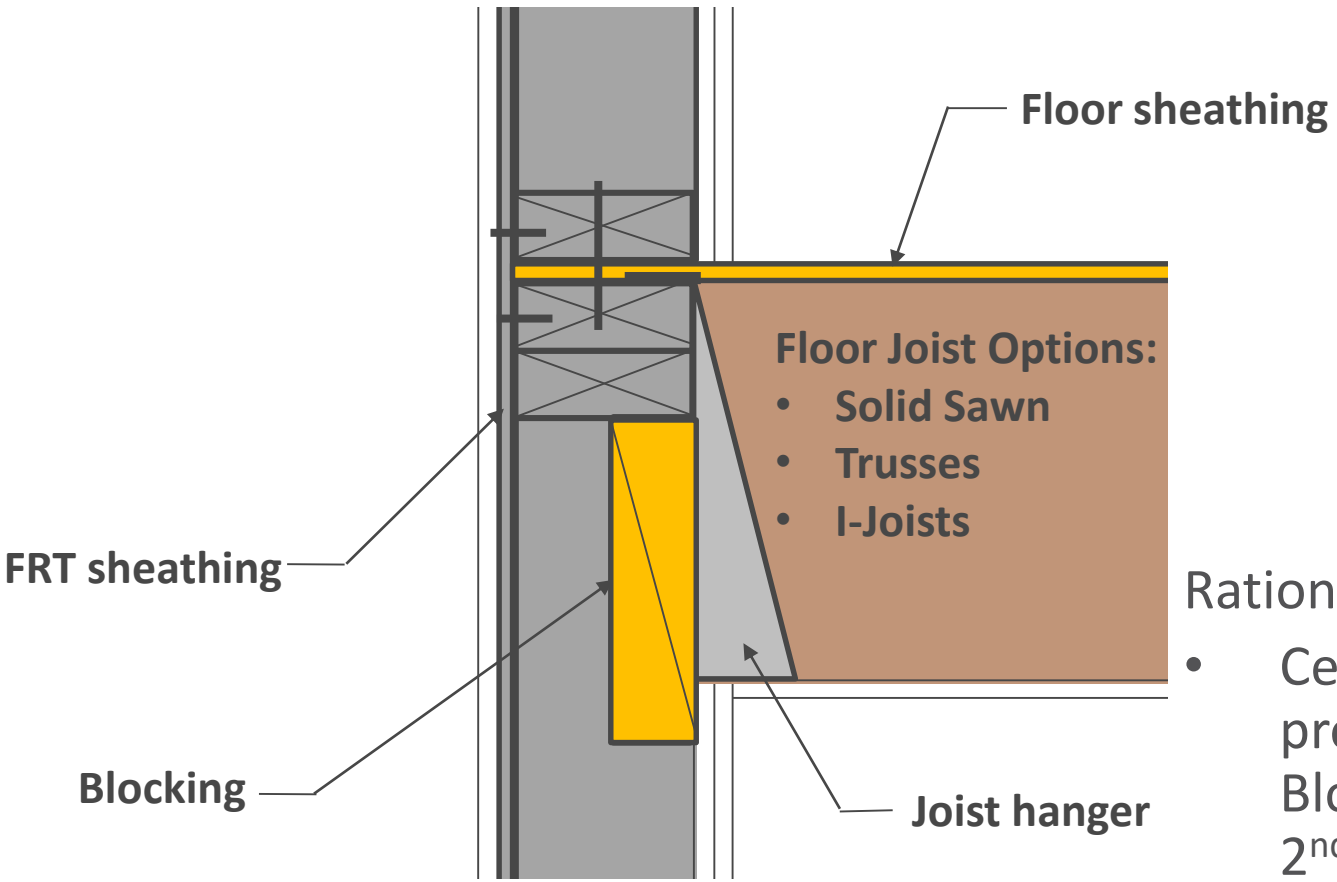

Legend

- Untreated or FRT
- FRT Wood
- Untreated

Rationale for detail approval:

- Ceiling membrane provides 1 hr protection; Blocking in wall provides 2nd hr through char calculations

Exterior Walls – Intersecting Floors

Type III Construction – 2 HR Wall, 1 HR Floor
Semi-Balloon Framing w/Add'l Fire Protection

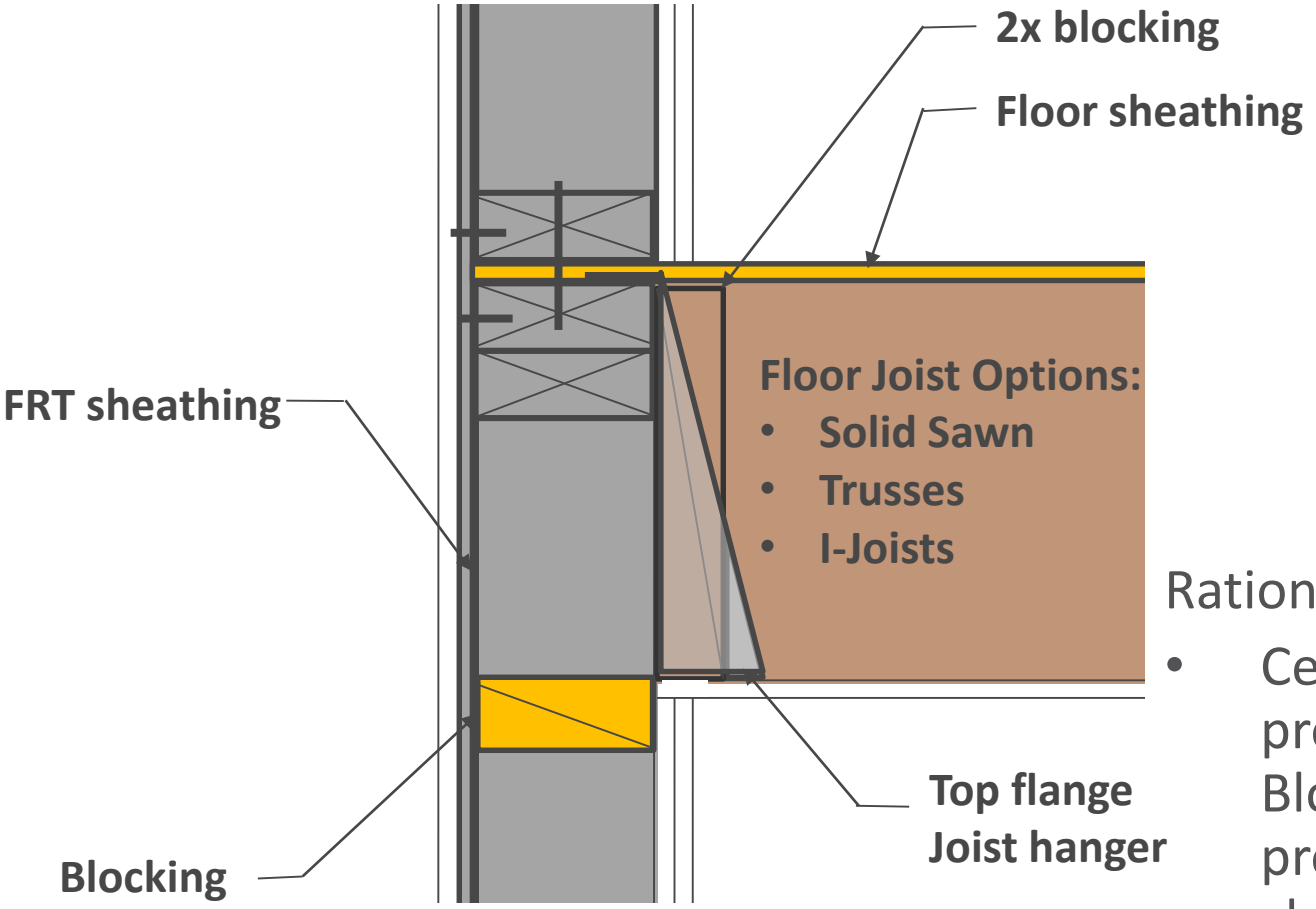

Legend

- Untreated or FRT
- FRT Wood
- Untreated

Rationale for detail approval:

- Ceiling membrane provides 1 hr protection; Blocking between joists provides 2nd hr through char calculations

Exterior Walls – Intersecting Floors

Type III Construction – 2 HR Wall, 1 HR Floor
Semi-Balloon Framing w/Add'l Fire Protection

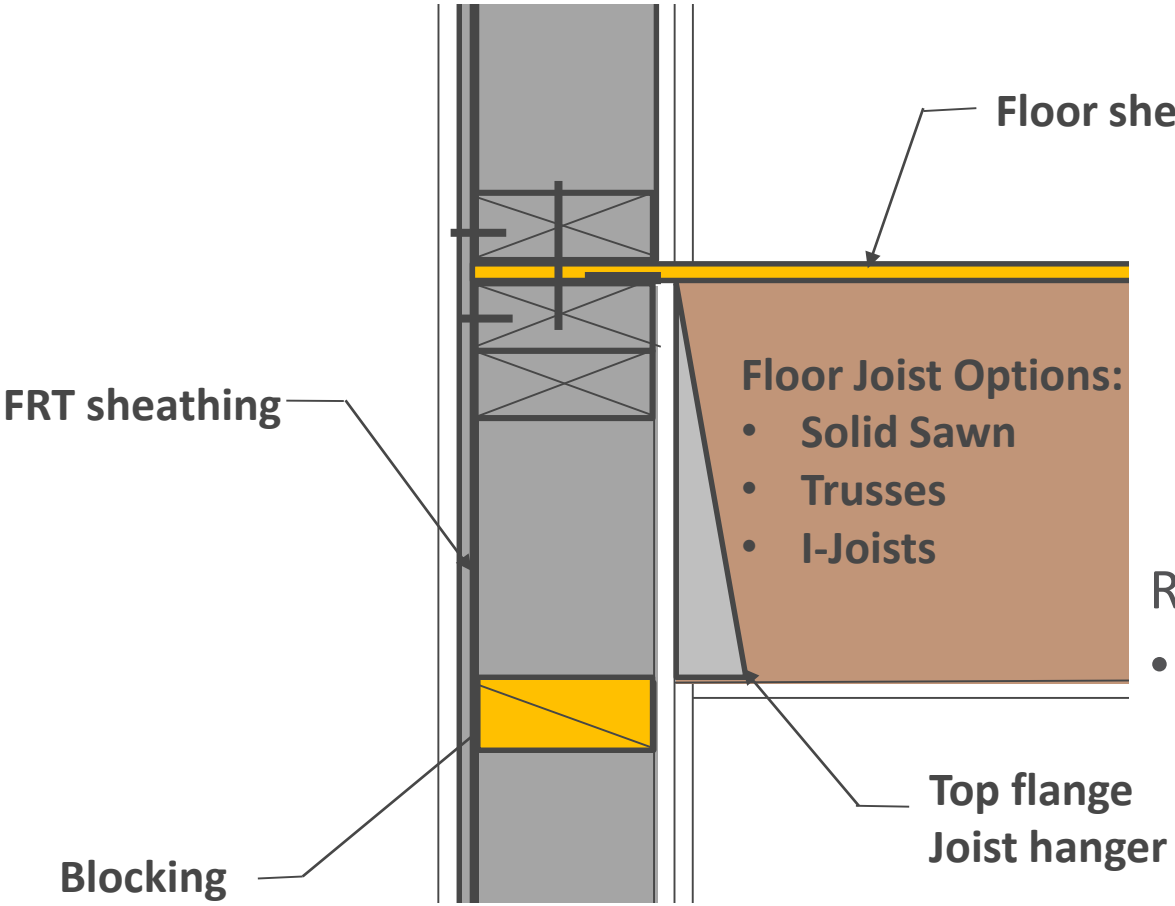

Legend

- Untreated or FRT
- FRT Wood
- Untreated

Rationale for detail approval:

- Ceiling membrane provides 1 hr protection; 1 layer of wall membrane provides 2nd hr

Exterior Walls – Intersecting Floors

Type III Construction – 2 HR Wall, 1 HR Floor
Semi-Balloon Framing w/Add'l Fire Protection

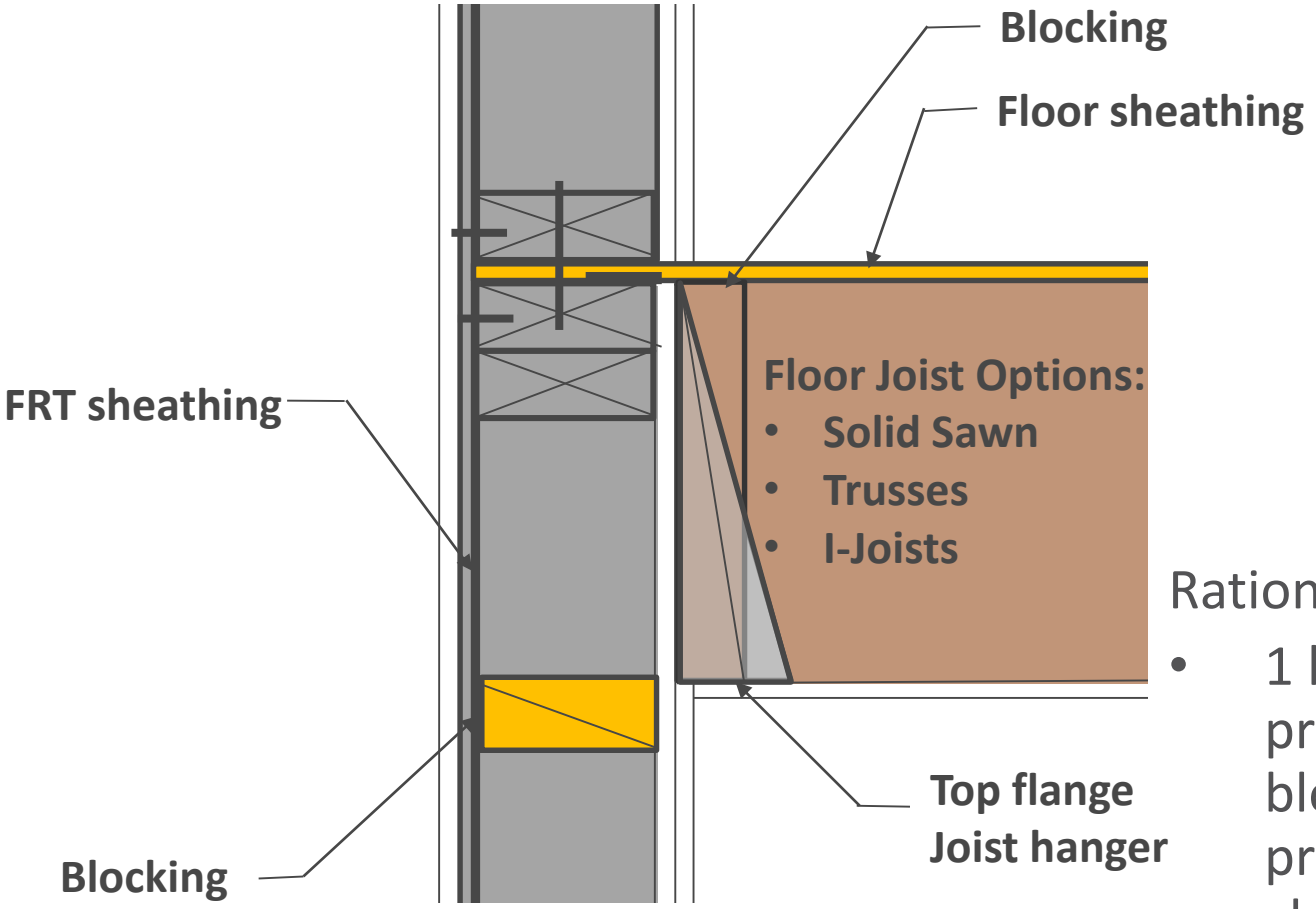

Legend

- Untreated or FRT
- FRT Wood
- Untreated

Rationale for detail approval:

- 1 layer of wall membrane provides 1 hr protection; blocking between joists provides 2nd hr through char calculations

Exterior Walls – Intersecting Floors

Type III Construction – 2 HR Wall, 1 HR Floor
Semi-Balloon Framing w/Add'l Fire Protection

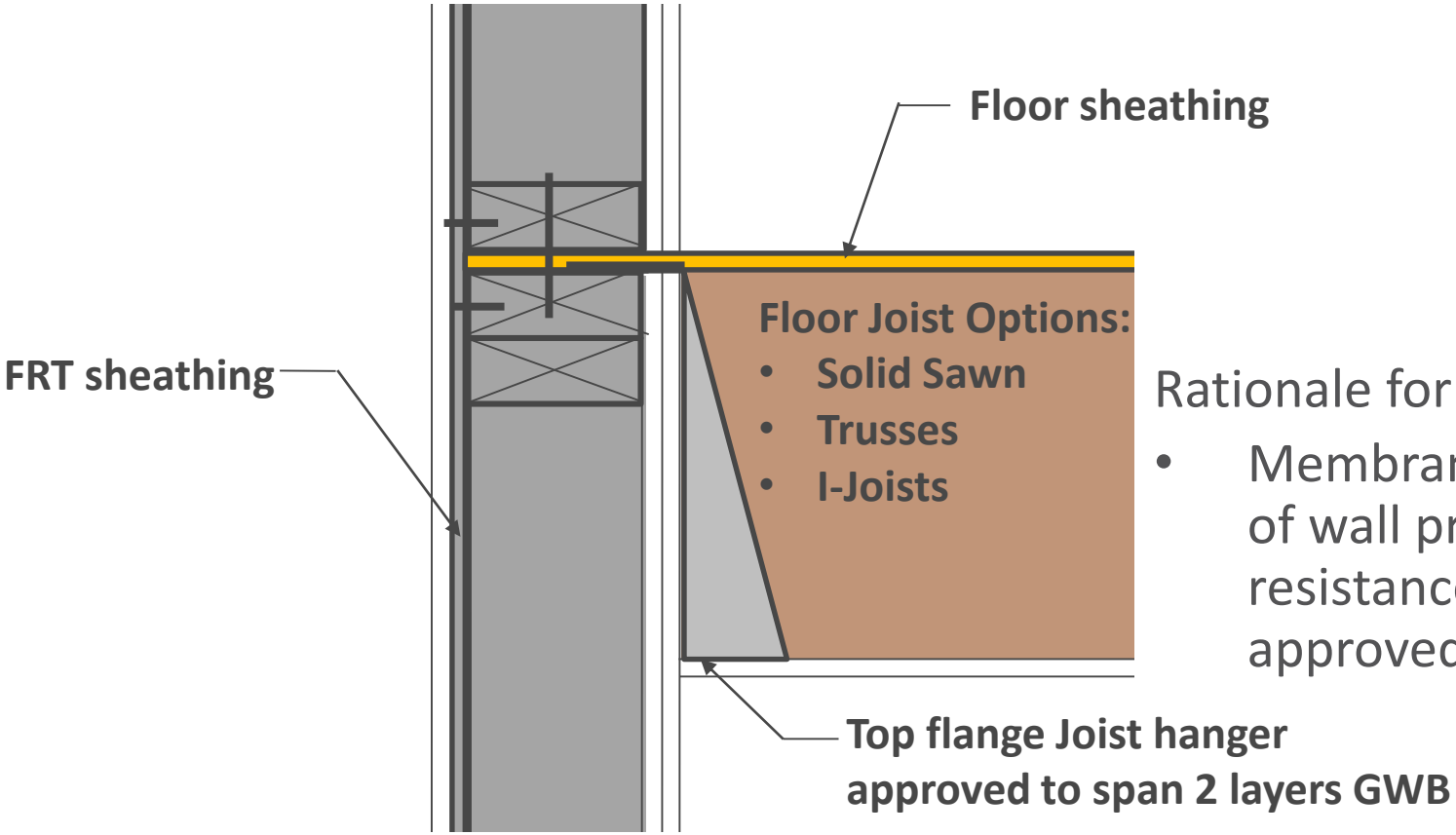

Legend

- Untreated or FRT
- FRT Wood
- Untreated

Rationale for detail approval:

- Membranes on both side of wall provide fire resistance via their approved assembly

Over Gypsum Hangers

Commonly called Fire Wall or Drywall Hangers

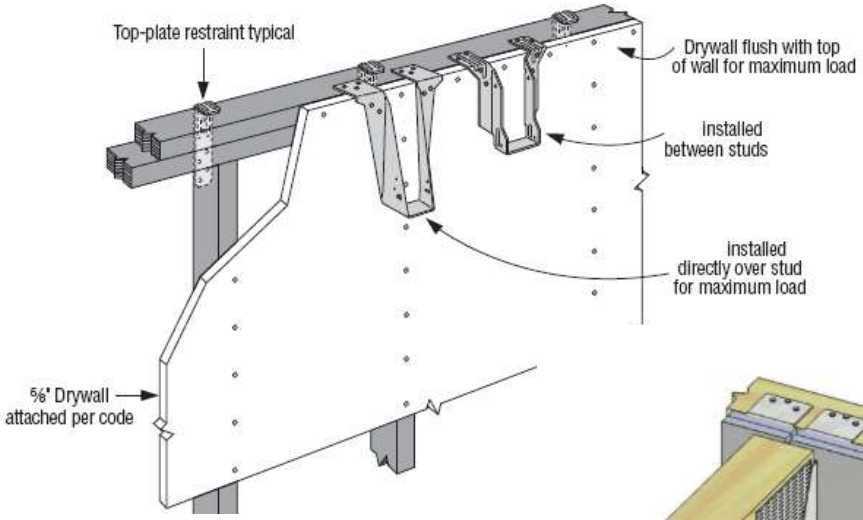

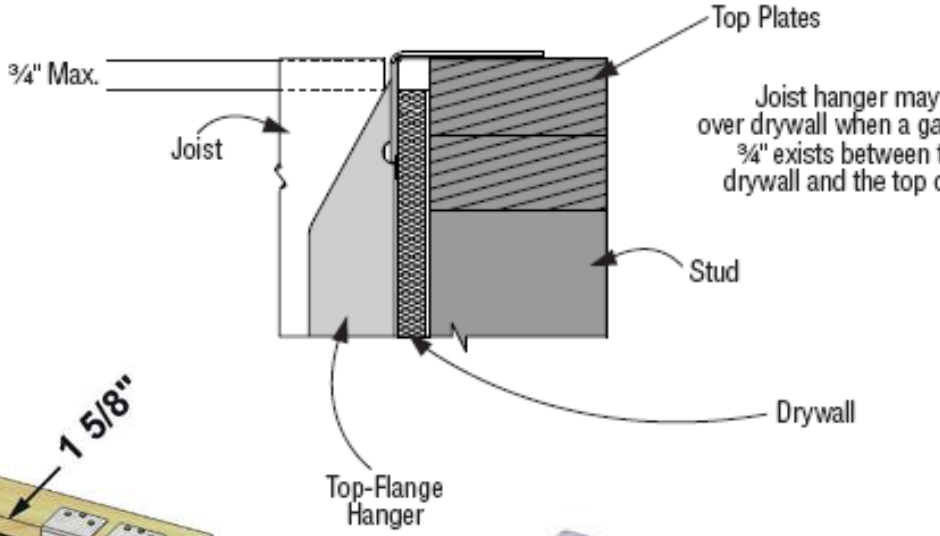

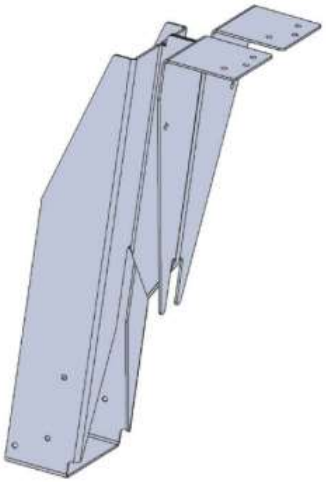

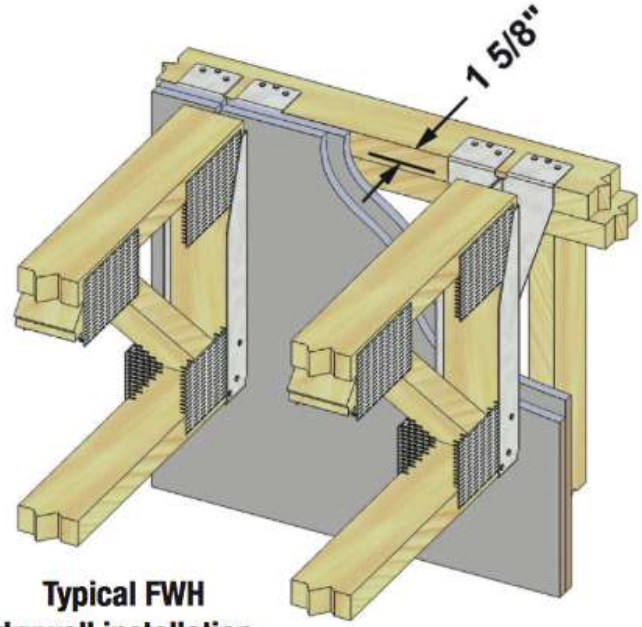

Typical FWH drywall installation using FWH-T Template

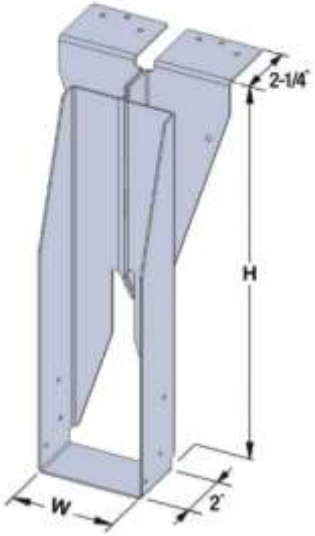

Over Gypsum Hangers

Top Flange Hangers & Face Mount Hangers Available

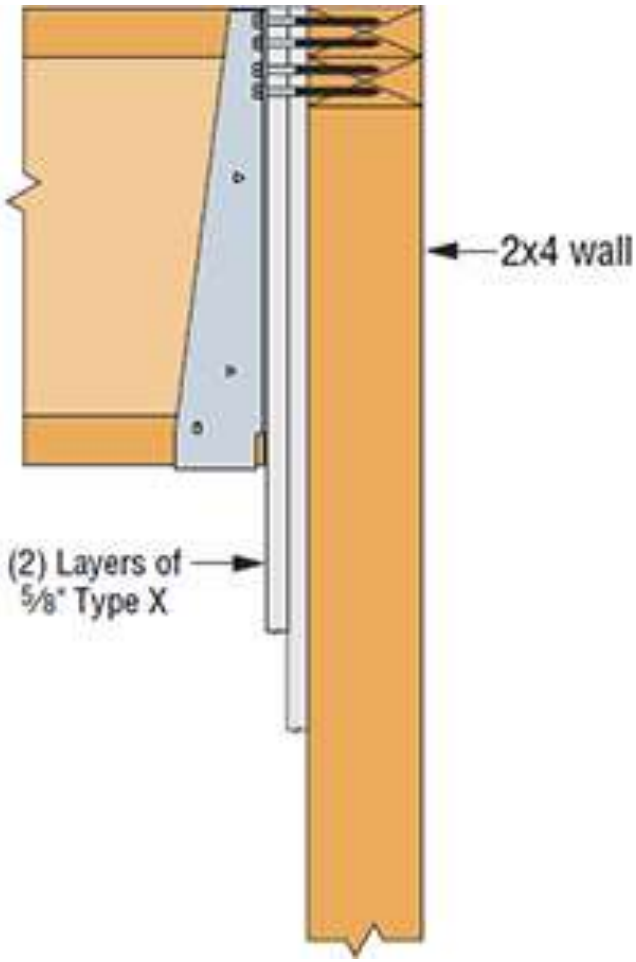

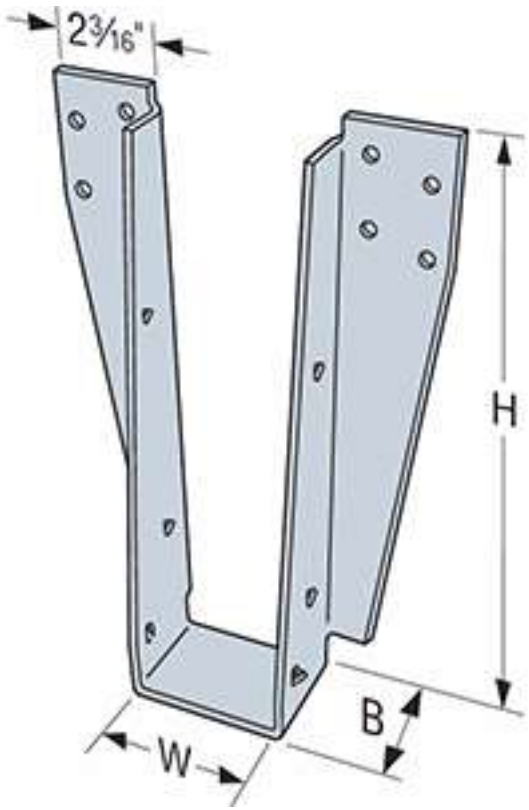

Exterior Walls – Intersecting Floors

Type III Construction – 2 HR Wall, 1 HR Floor
Semi-Balloon Framing w/Ledger

This detail is often used with a balcony – ledger is thru-bolted

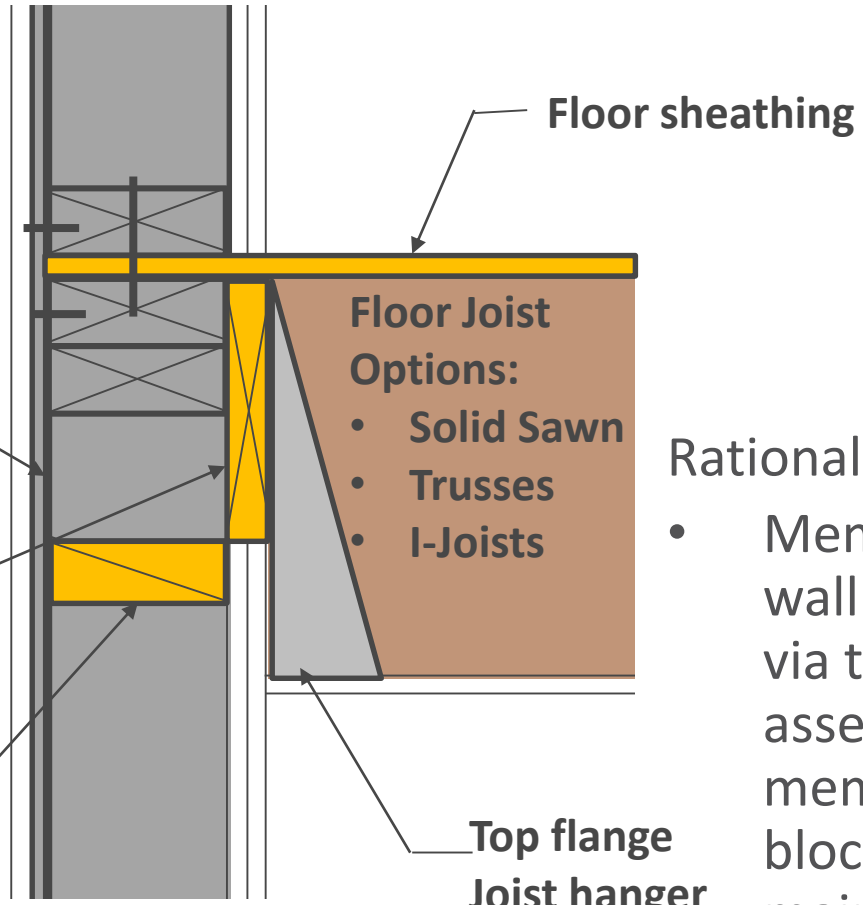

Legend

- Untreated or FRT
- FRT Wood
- Untreated

Rationale for detail approval:

- Membranes on both side of wall provide fire resistance via their approved assembly; at floor ceiling membrane provides 1 hr; blocking provides 2nd hr & maintains FRT continuity

Exterior Walls – Intersecting Floors

Type III Construction – 2 HR Wall, 1 HR Floor

Platform Framing w/Top Chord Bearing

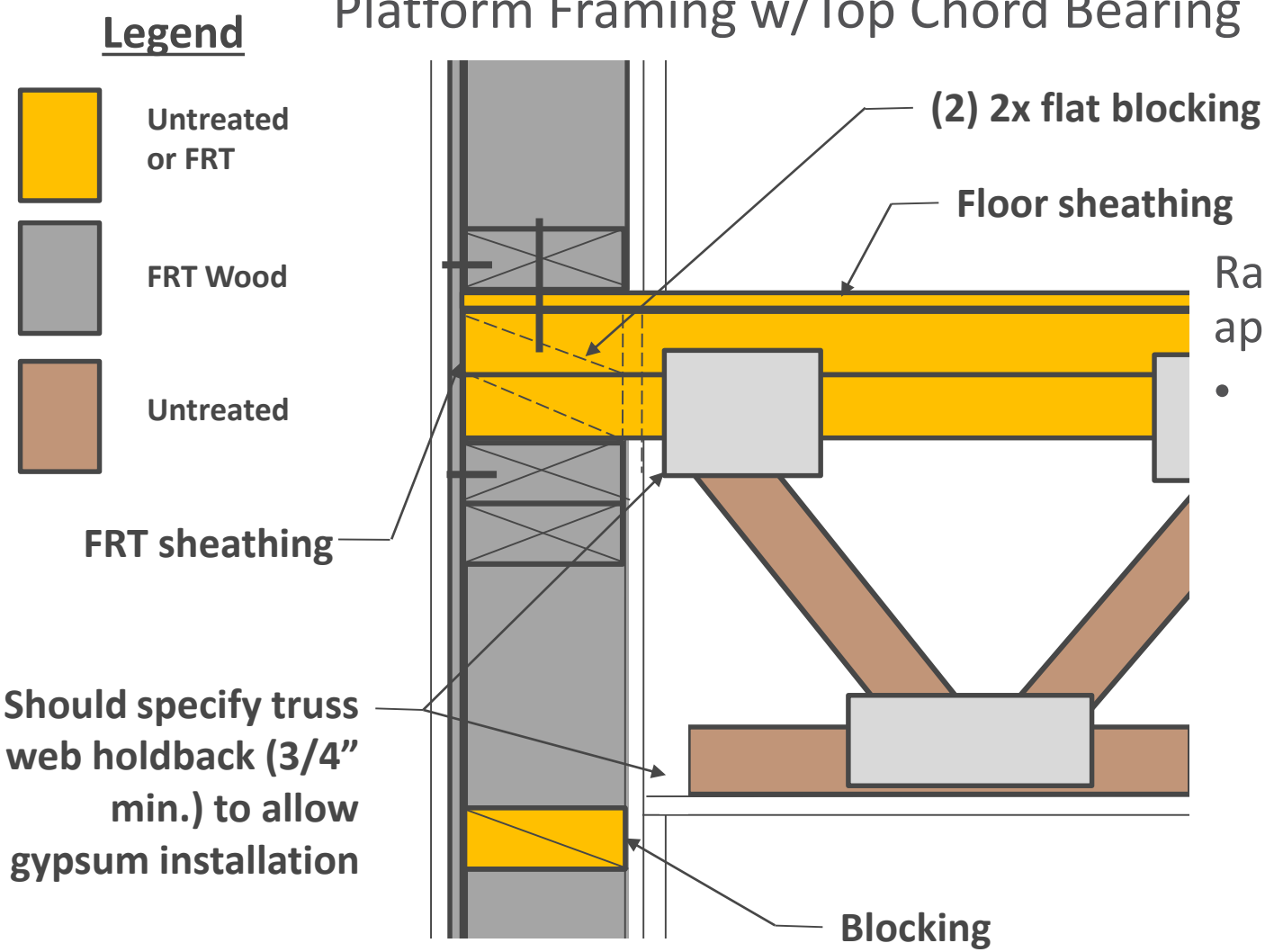

Rationale for detail approval:

- Membranes on both side of wall provide fire resistance via their approved assembly; at floor cavity ceiling membrane provides 1 hr; 1 layer of wall membrane provides 2nd hr

Exterior Walls – Intersecting Floors

Type III Construction – 2 HR Wall, 1 HR Floor

Platform Framing w/Top Chord Bearing

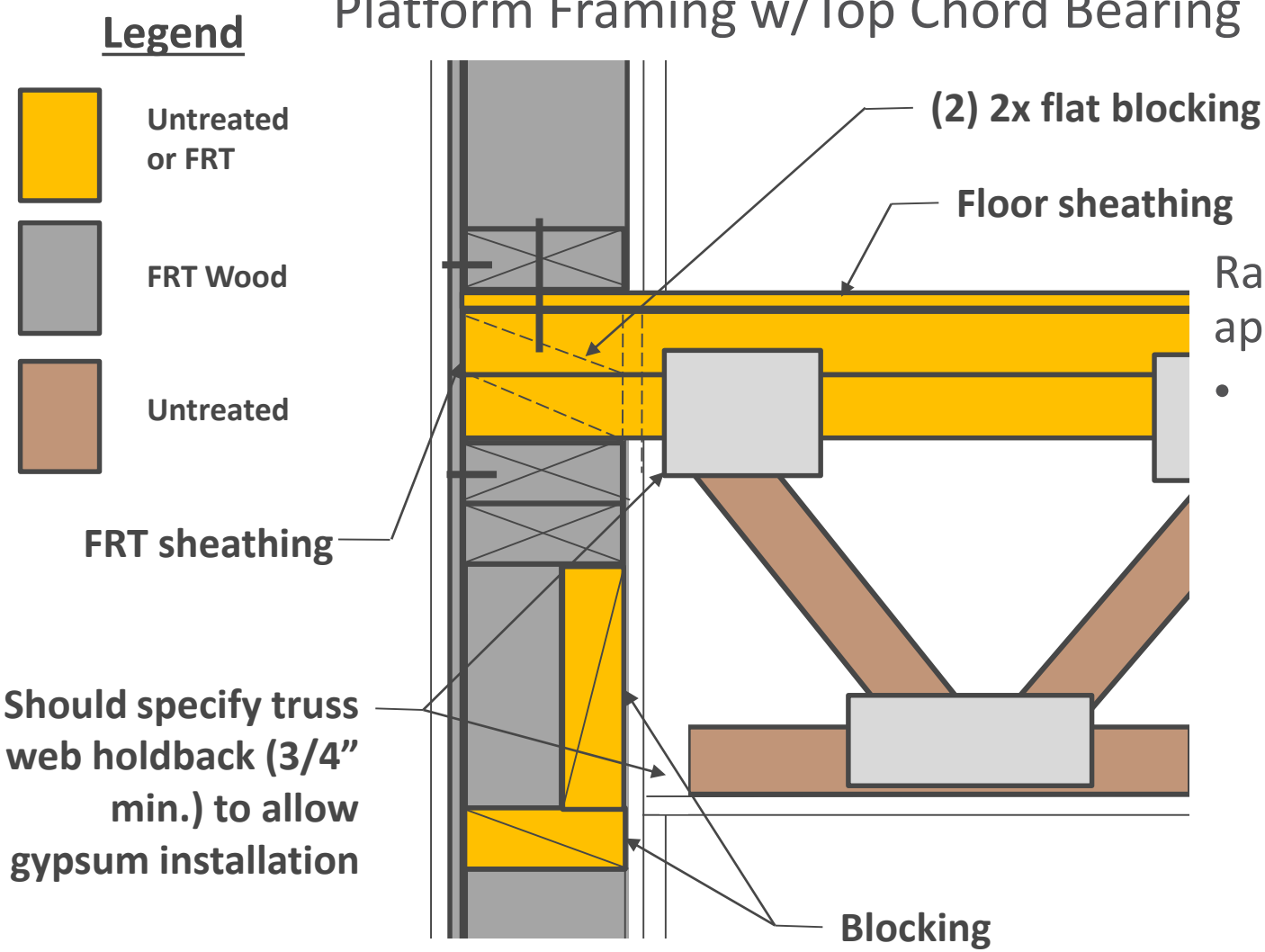

Rationale for detail approval:

- Membranes on both side of wall provide fire resistance via their approved assembly; at floor cavity blocking in wall provides 1 hr; 1 layer of wall membrane provides 2nd hr

Exterior Walls – Intersecting Floors

Type III Construction – 2 HR Wall, 1 HR Floor

Platform Framing w/Top Chord Bearing

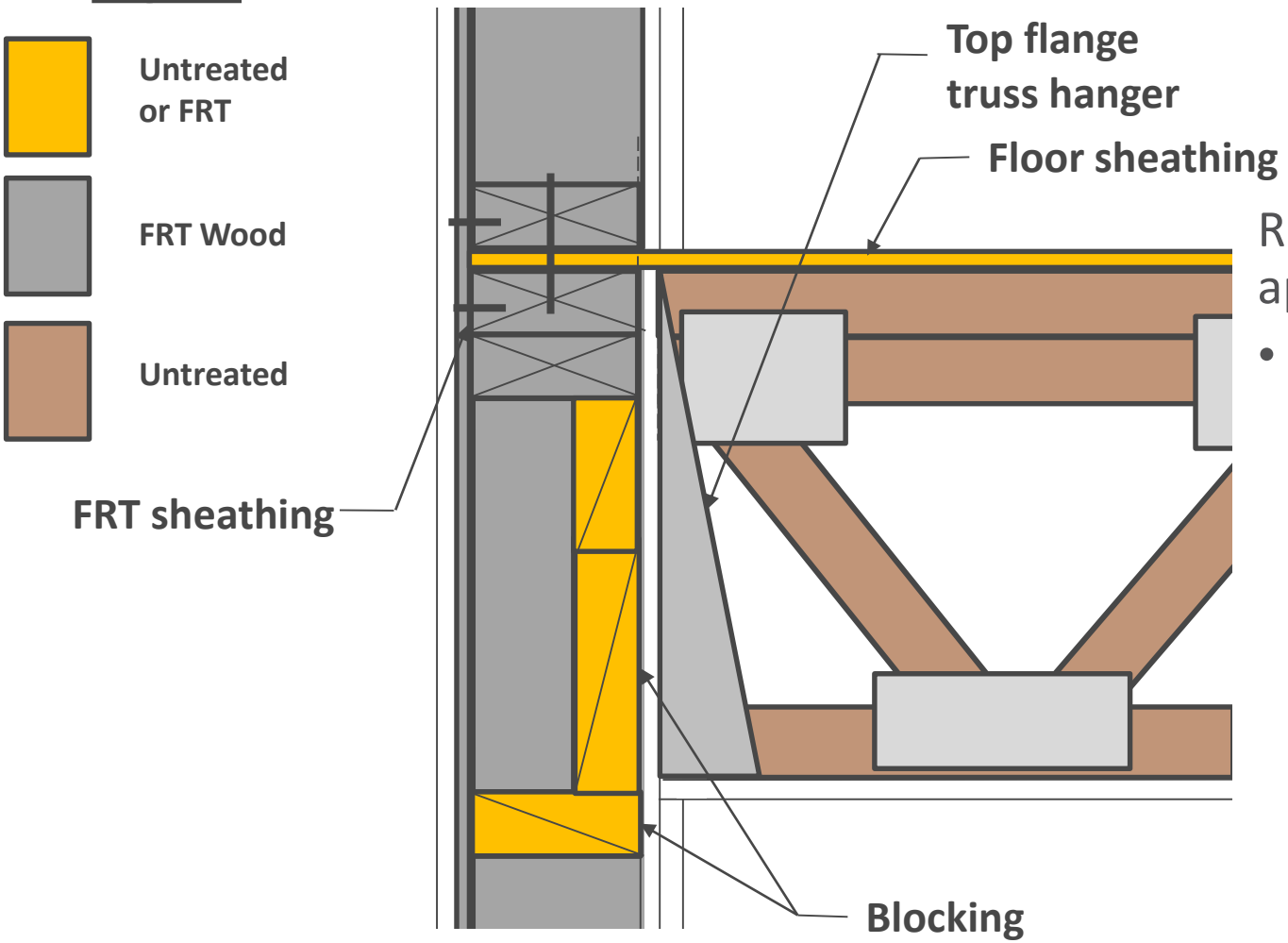

Rationale for detail approval:

- Membranes on both side of wall provide fire resistance via their approved assembly; at floor cavity blocking in wall provides 1 hr; 1 layer of wall membrane provides 2nd hr

Exterior Walls – Intersecting Floors

Type III Construction – 2 HR Wall, 1 HR Floor

Platform Framing w/Top Chord Bearing

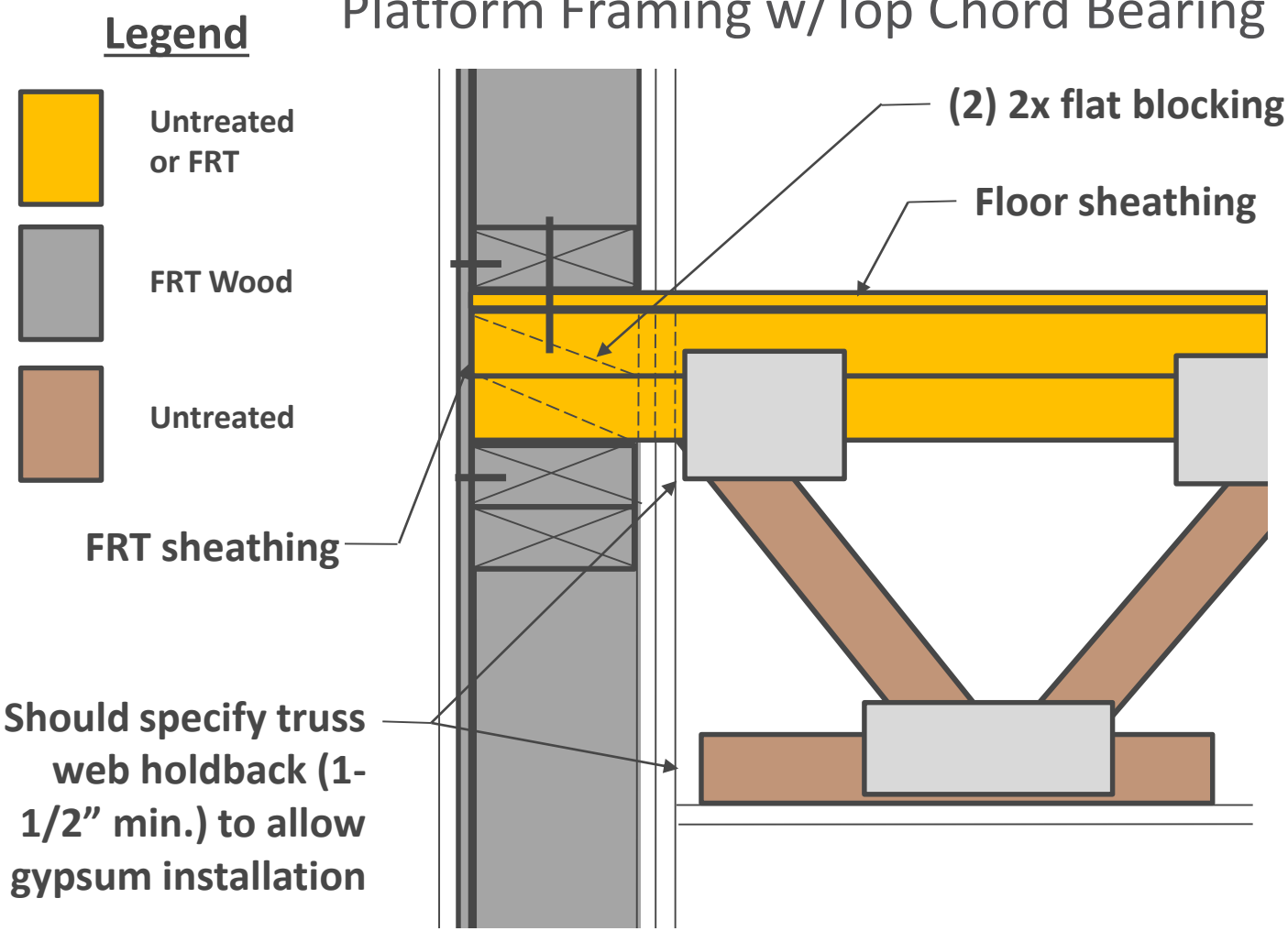

Rationale for detail approval:

- Membranes on both side of wall provide fire resistance via their approved assembly

Exterior Walls – Intersecting Floors

Type III Construction – 2 HR Wall, 1 HR Floor
Platform Framing w/Top Chord Bearing

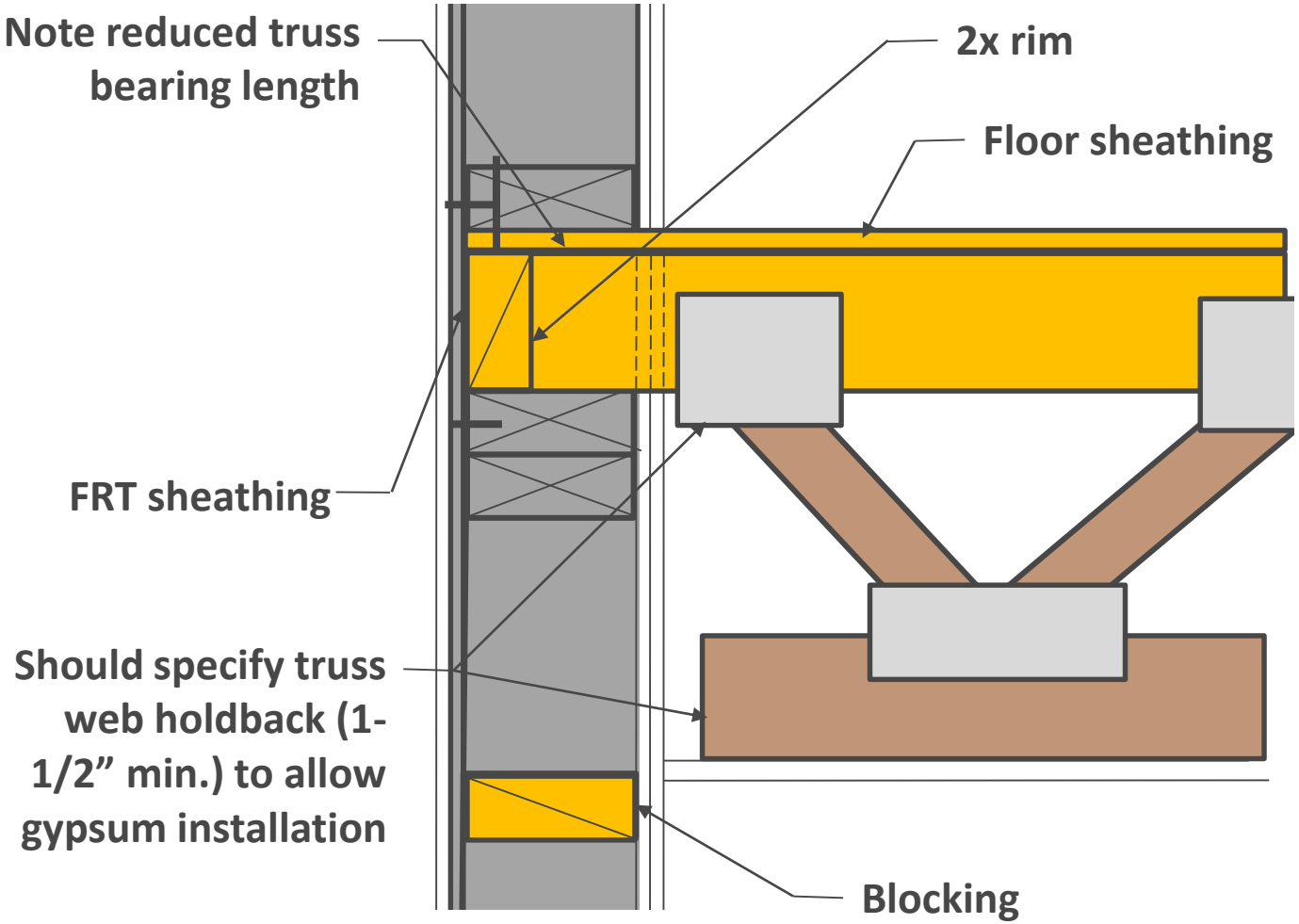

Legend

- Untreated or FRT
- FRT Wood
- Untreated

Rationale for detail approval:

- Membranes on both side of wall provide fire resistance via their approved assembly

Exterior Walls – Intersecting Floors

Exterior Walls – Intersecting Floors

Gaps btwn end of truss members and wall to allow gypsum install after

Exterior Walls – Intersecting Floors

Type III Construction – 2 HR Wall, 1 HR Floor
Platform Framing w/Top Chord Bearing/Ledger

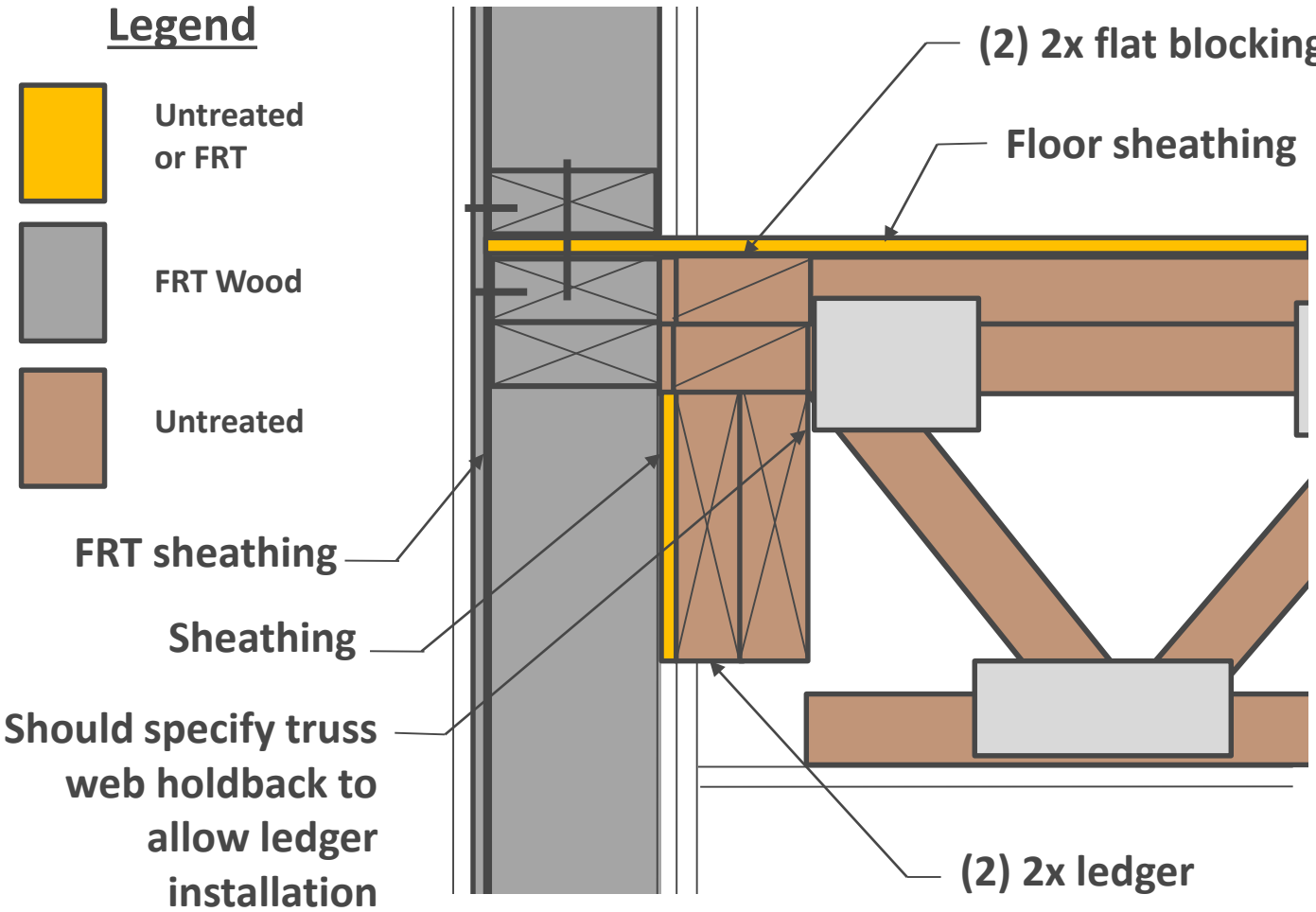

Rationale for detail approval:

- Membranes on both side of wall provide fire resistance via their approved assembly; at top chords, ledger & sheathing provide continuity

Exterior Walls – Intersecting Floors

Type III Construction – 2 HR Wall, 1 HR Floor
Platform Framing w/Bottom Chord Bearing

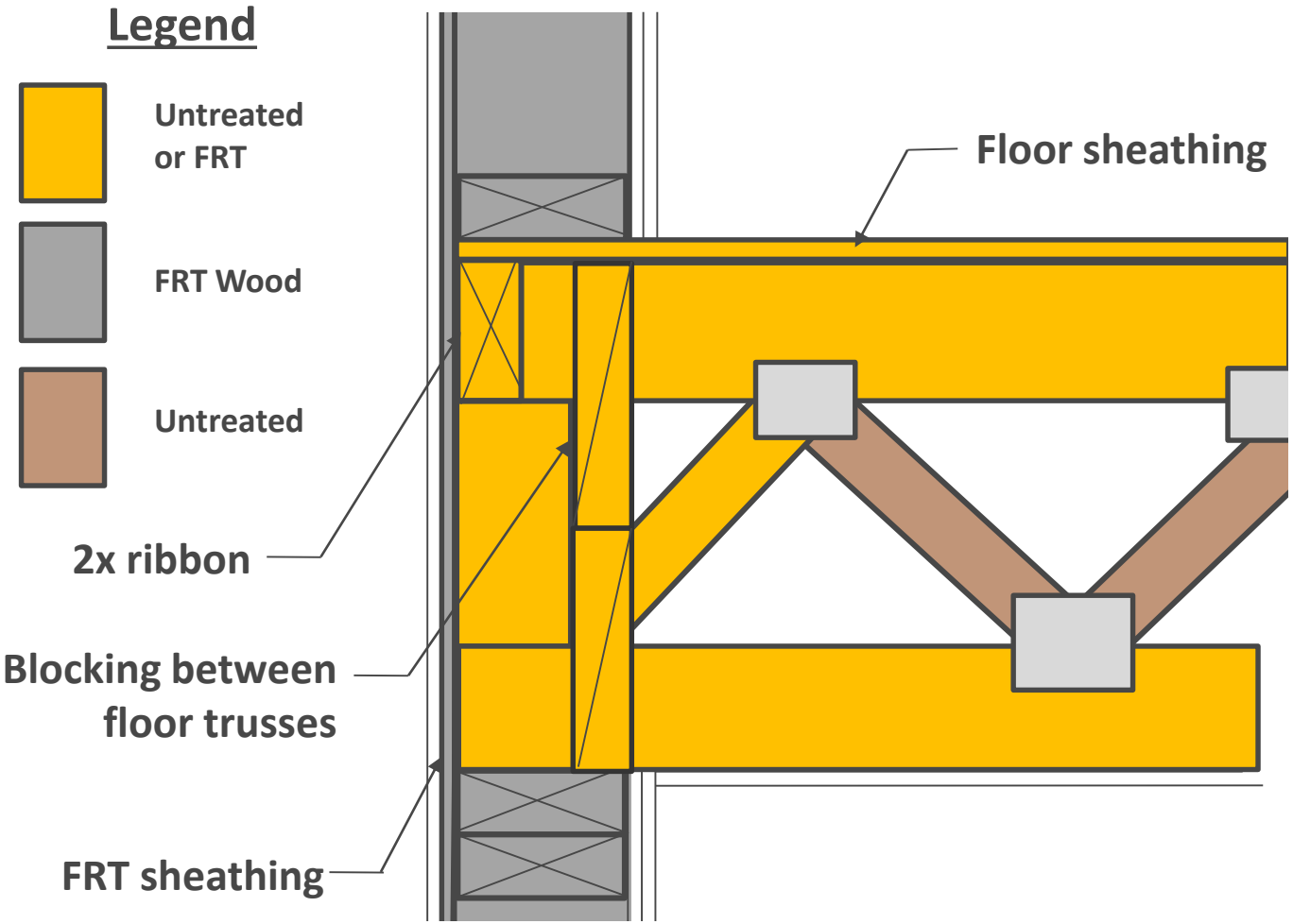

Rationale for detail approval:

- Membranes on both side of wall provide fire resistance via their approved assembly; at floor cavity blocking in wall provides 1 hr; ceiling provides 2nd hr

Exterior Walls – Intersecting Floors

Type III Construction – 2 HR Wall, 1 HR Floor
Platform Framing w/Bottom Chord Bearing

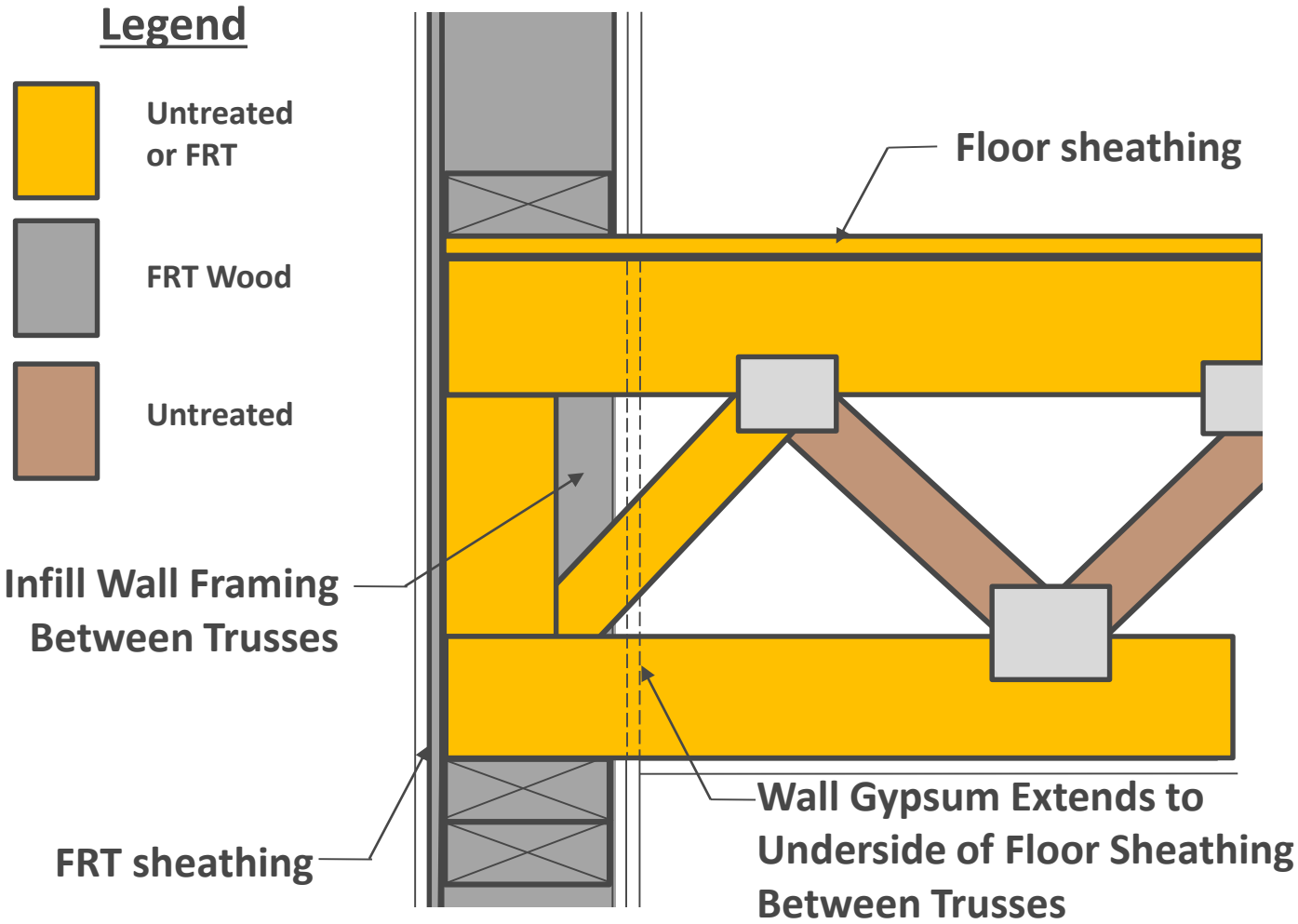

Rationale for detail approval:

- Membranes on both side of wall provide fire resistance via their approved assembly

Exterior Walls – Intersecting Floors

Exterior Walls – Bearing vs. Non-Bearing

Utilization of structural beams in-board or directly over exterior walls can make walls non-bearing and reduce required fire resistance rating to 1 HR or 0 HR (IBC Table 602)

Note: Beams & Columns will most likely be considered “Primary Structural Frame” & require individual encasement per IBC 704

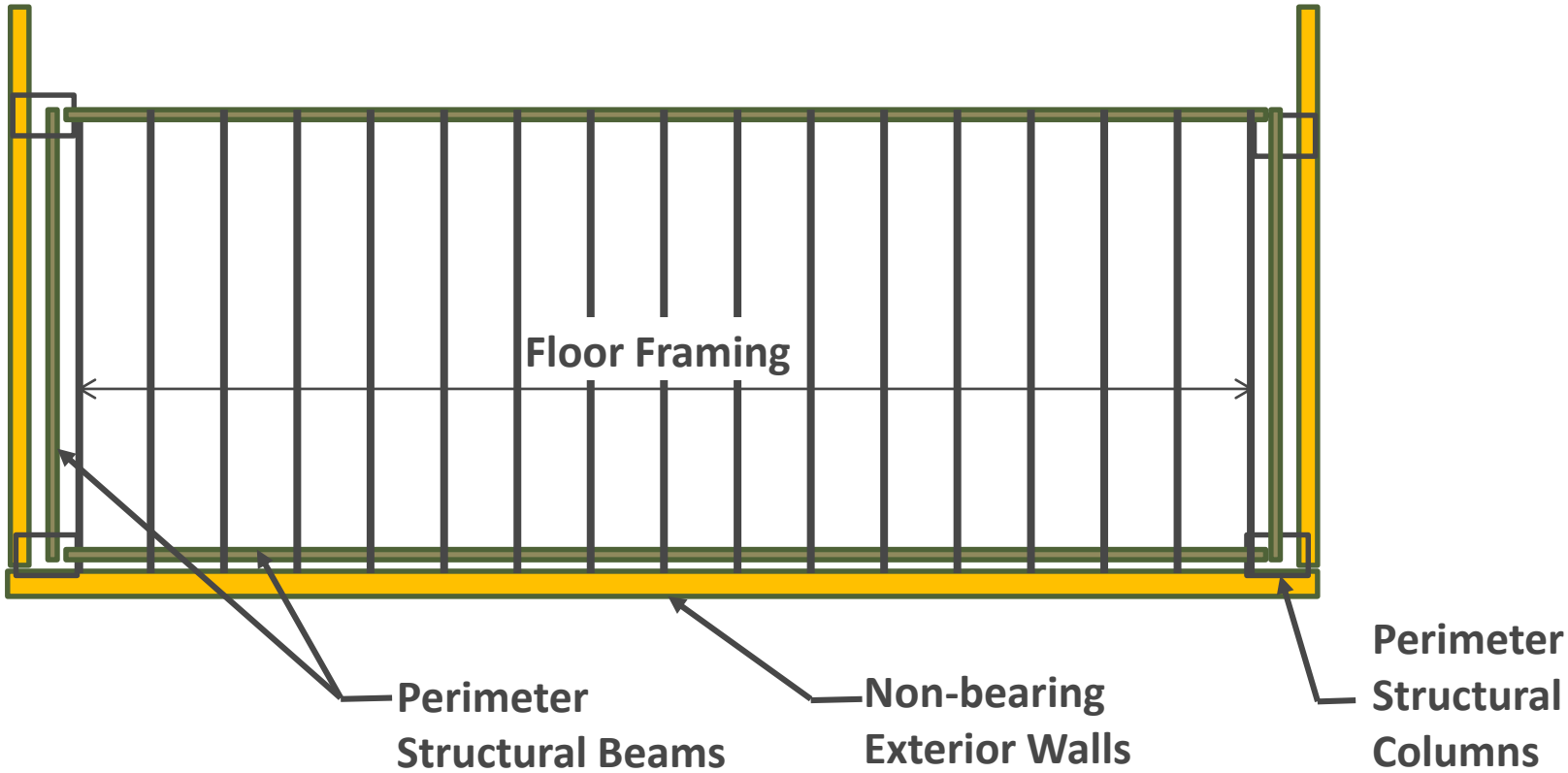

Exterior Walls – Bearing vs. Non-Bearing

If framing parallel to long exterior walls is possible, minimizes area of load bearing exterior walls

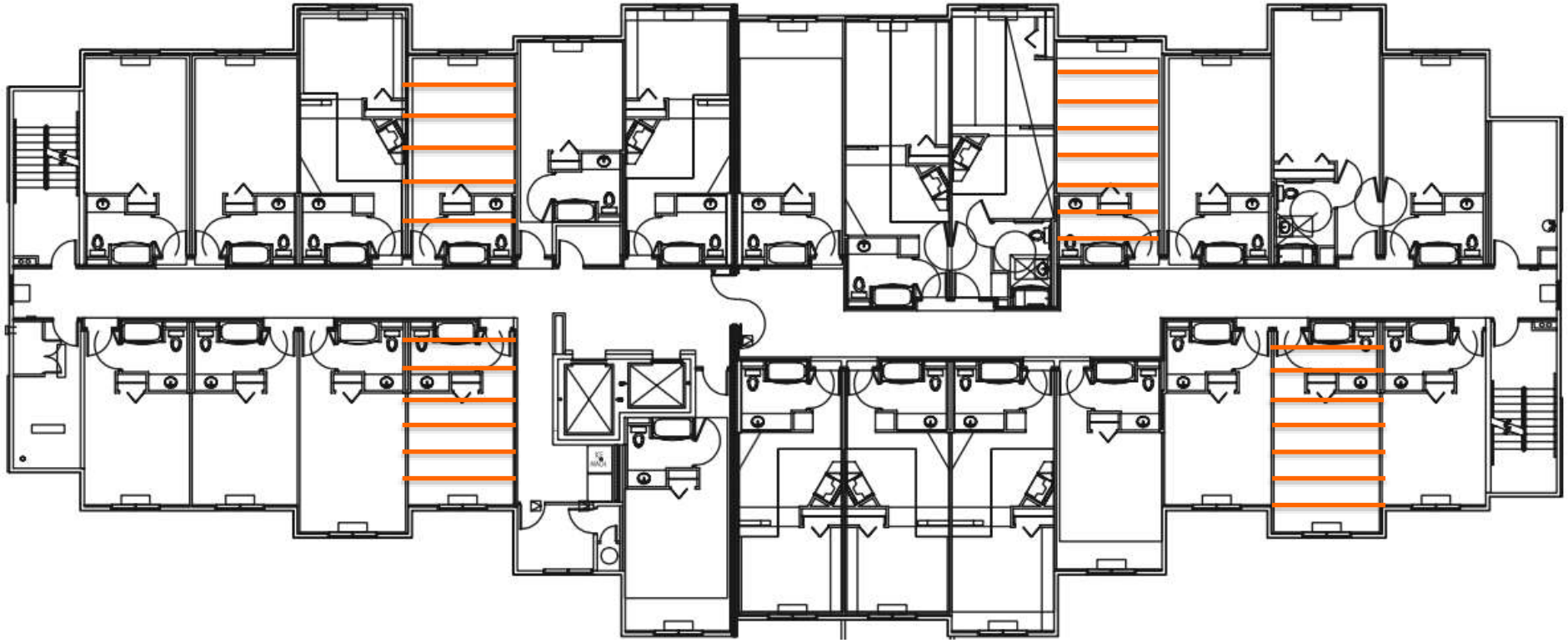

Type III Construction Detail Examples

What is being enforced in jurisdictions you are working in?

Outline

- Mid-Rise Construction Types & Life Safety Review
- Structural Design & Detailing Considerations
- Shrinkage Considerations & Detailing
- Acoustic Requirements & Detailing
- Fire Resistive Requirements and Detailing
  - Exterior Walls
  - Floor to Wall Detailing
  - Interior Walls
  - Shaft Walls
  - Corridors & Balconies

Interior Fire-Rated Walls: Differences

Fire walls	Fire Barrier	Fire Partition:
• Building Separation • Openings are protected • Continuous from foundation to/through roof • Structural stability	• Shafts, Occupancy Separation • Continuous from floor through concealed space	• Dwelling Unit Separation; Corridors • Openings are protected • May terminate at a fire rated floor/celiling/roof assembly

Fire Walls – Ratings & Materials

TABLE 706.4
FIRE WALL FIRE-RESISTANCE RATINGS

GROUP	FIRE-RESISTANCE RATING (hours)
A, B, E, H-4, I, R-1, R-2, U	3[a]
F-1, H-3[b], H-5, M, S-1	3
H-1, H-2	4[b]
F-2, S-2, R-3, R-4	2

a. In Type II or V construction, walls shall be permitted to have a 2-hour fire-resistance rating.

b. For Group H-1, H-2 or H-3 buildings, also see Sections 415.6 and 415.7.

IBC 706.3 – Fire walls shall be of any approved non-combustible materials.

Exception: Buildings of Type V construction

Fire Walls – Ratings & Materials

Opportunity for Wood Framed Fire Walls:

- **Permitted in type V Construction**
- **Fire Walls in type V Construction of A, B, E, R and several other occupancies may be 2 hour**

Fire Walls in type III and IV construction are required to be constructed of non-combustible materials

- **Opportunity for wood frame bearing walls on each side of fire wall to meet structural stability requirements**

Fire Walls – Structural Stability

706.2 Structural Stability:
Fire walls shall have sufficient structural stability under fire conditions to allow collapse of construction on either side without collapse of the wall for the duration of time indicated by the required fire-resistance rating or shall be constructed as double fire walls in accordance with NFPA 221.

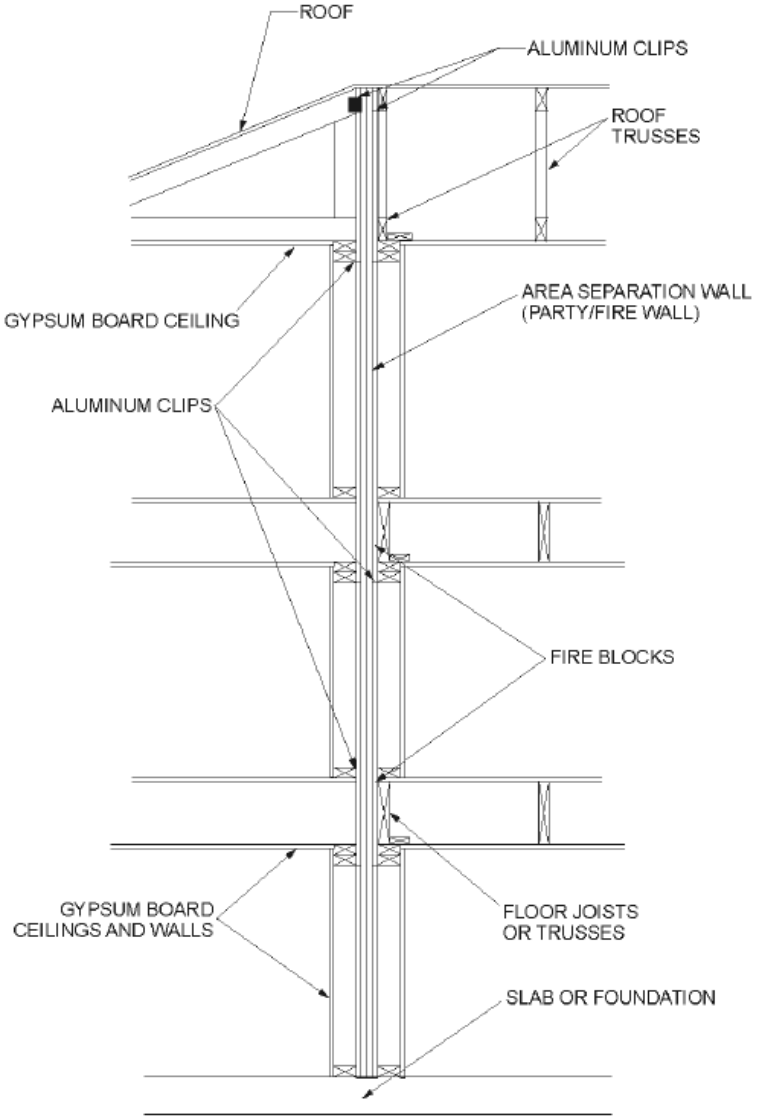

2 Hour Fire Wall Assembly

Construction Type:

- V

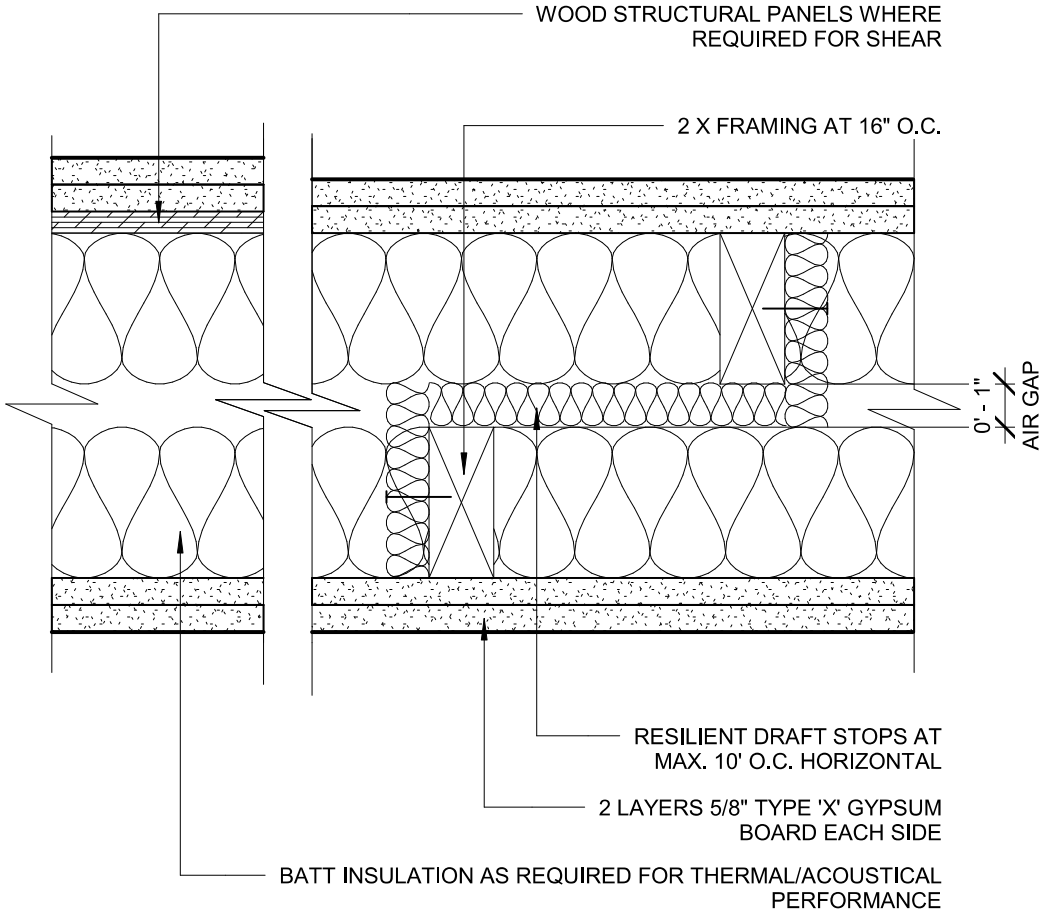

2-HOUR RATING PER GA FILE NO. WP 3820

2-HOUR DOUBLE STUD WALL

2 Hour Fire Wall Assembly

Construction Type:

- V

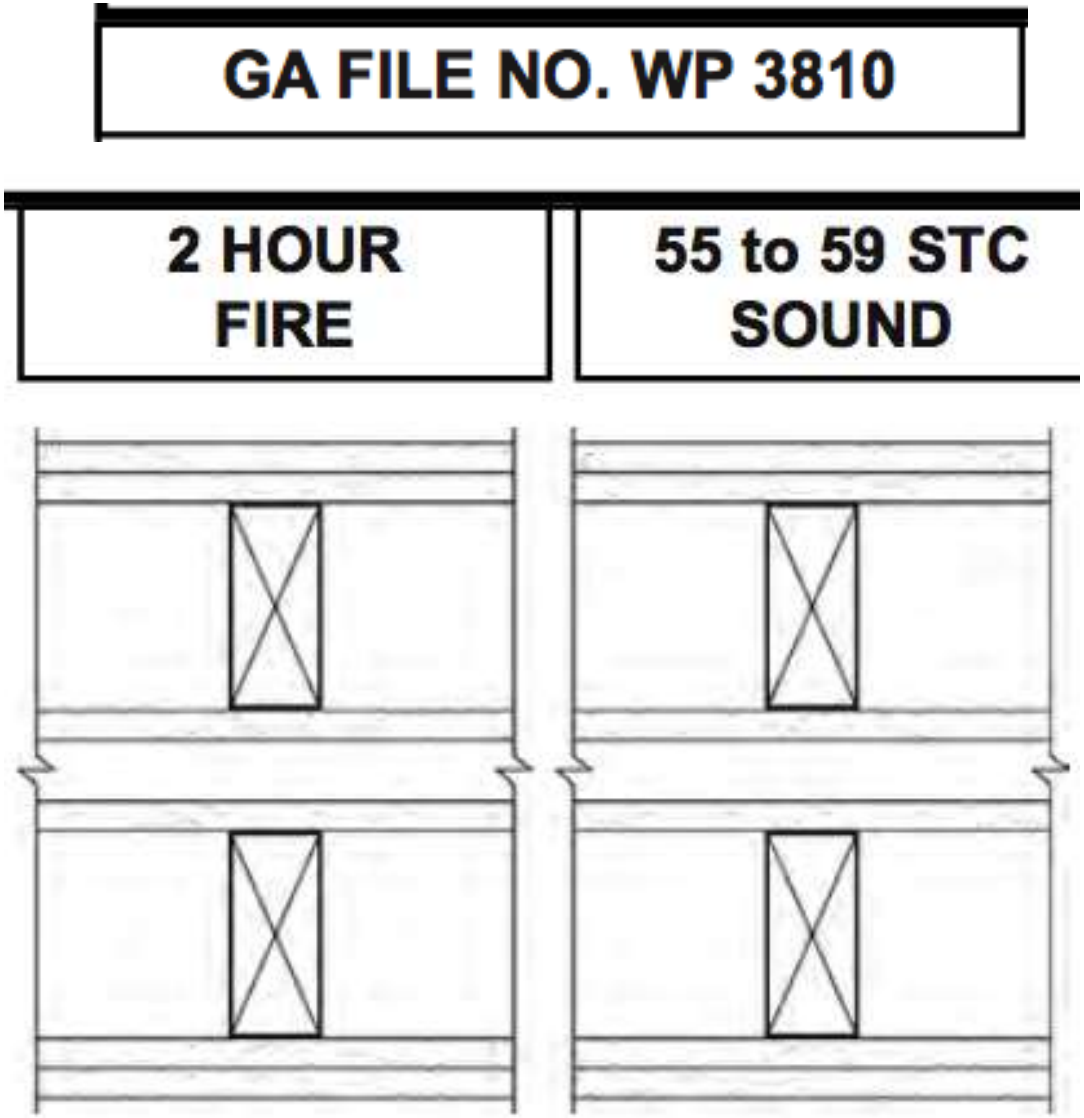

2 Hour Fire Wall Assembly

Construction Types:

- III
- IV
- V

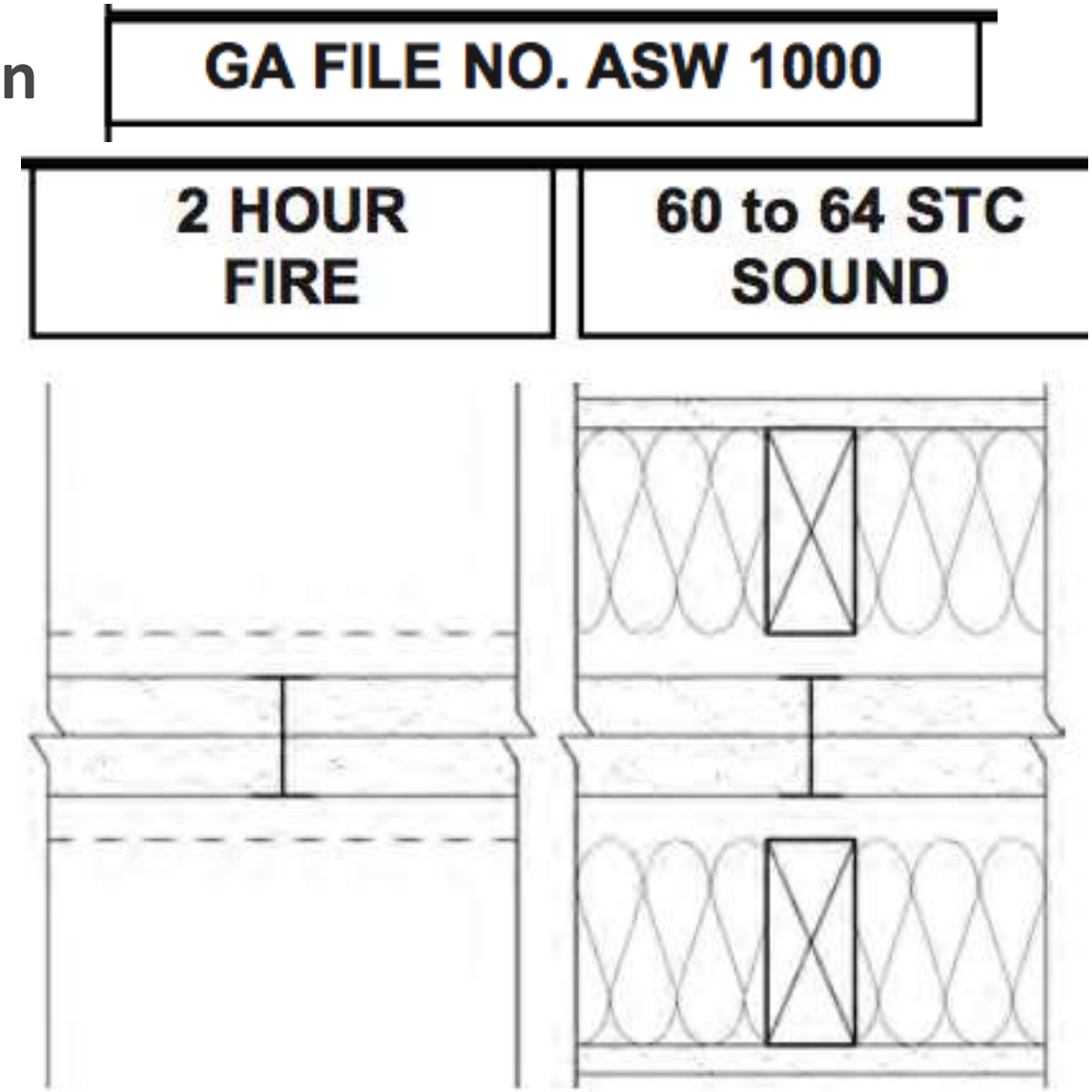

Also see UL U336

2 Hour Fire Wall Assembly

Construction Types:

- III
- IV
- V

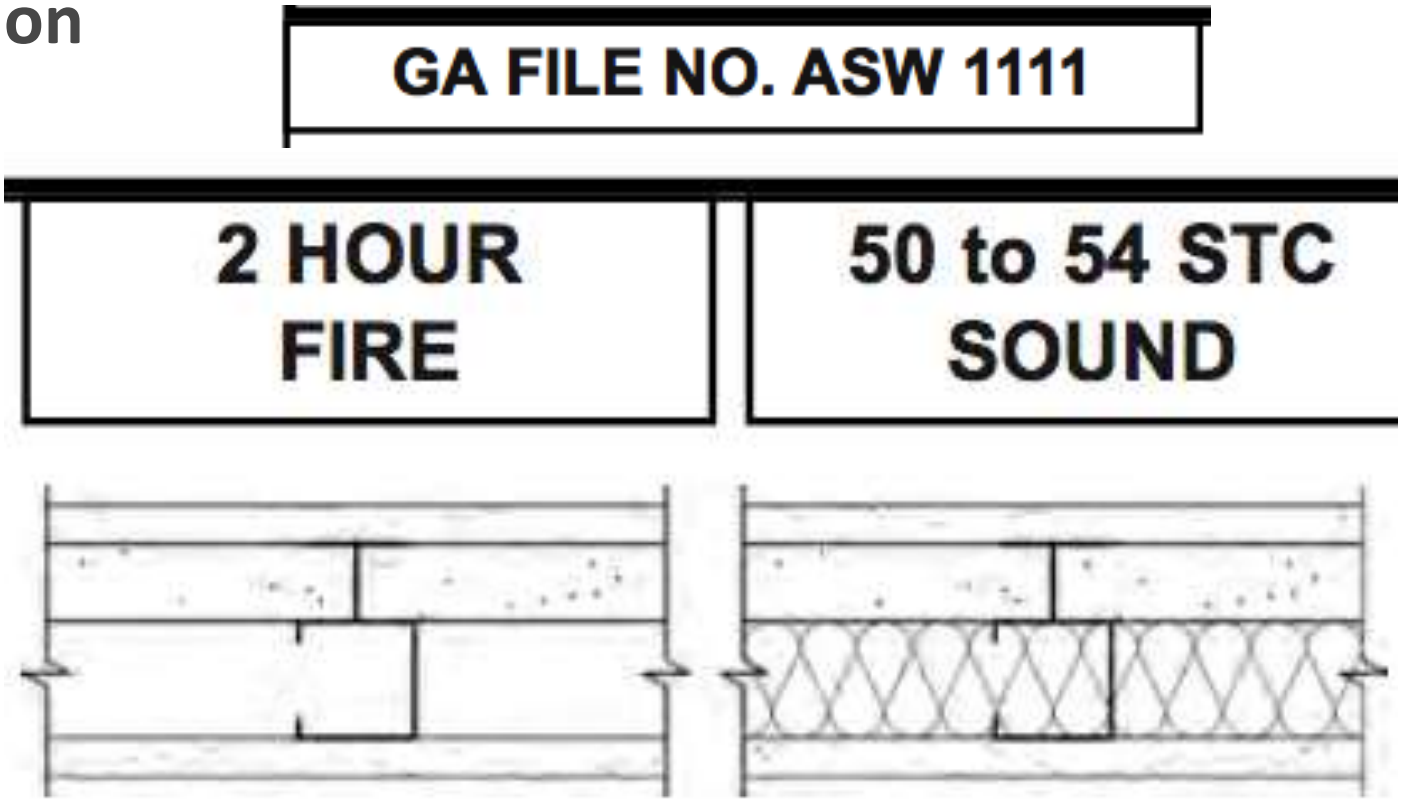

Can install wood bearing wall on each side of 2 hour wall

3 Hour Fire Wall Assembly

Construction Types:

- III
- IV
- V

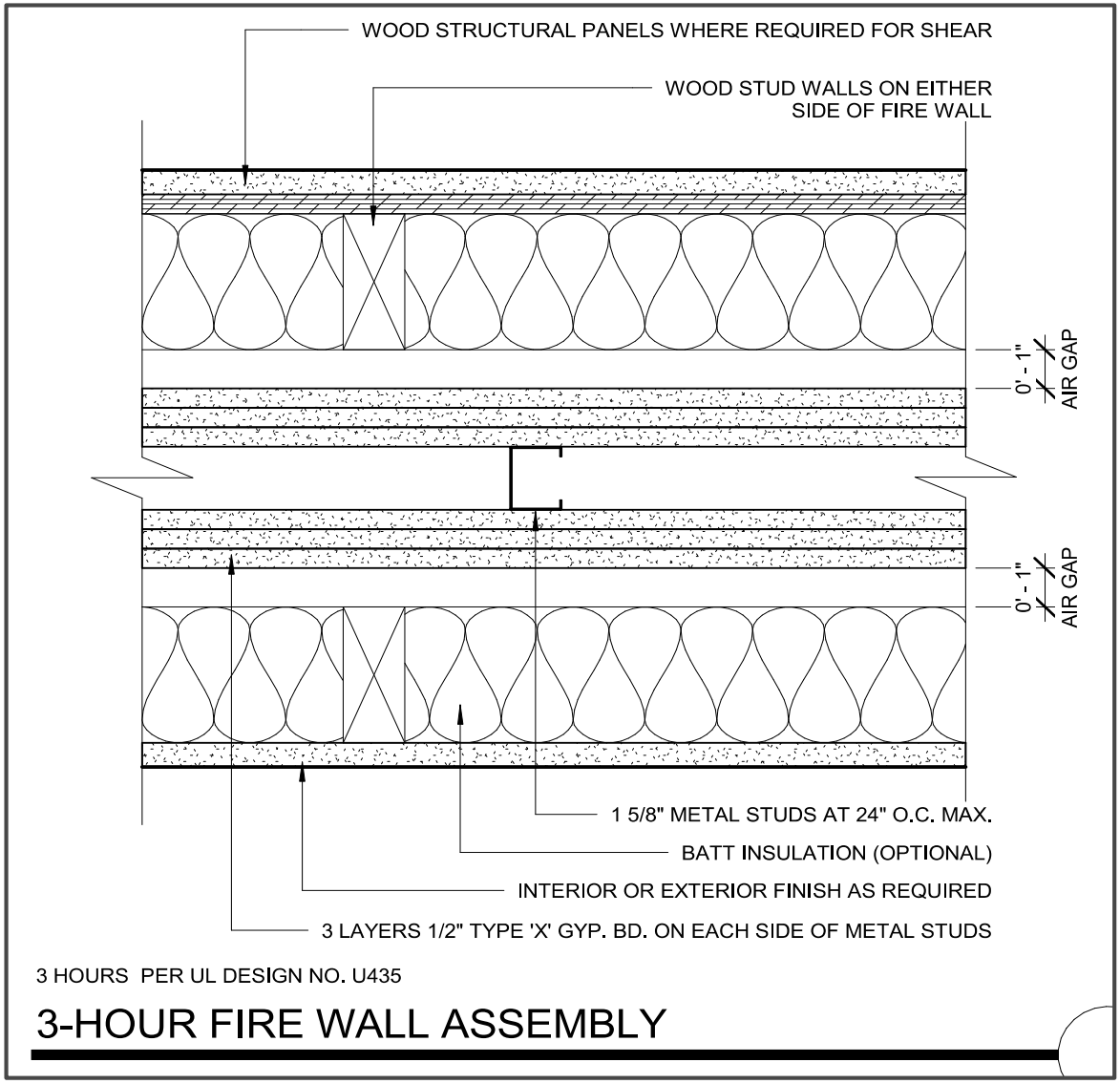

3 Hour Fire Wall Assembly

Construction Types:

- **III**
- **IV**
- **V**

GA FILE NO. ASW 2600

3 HOUR FIRE

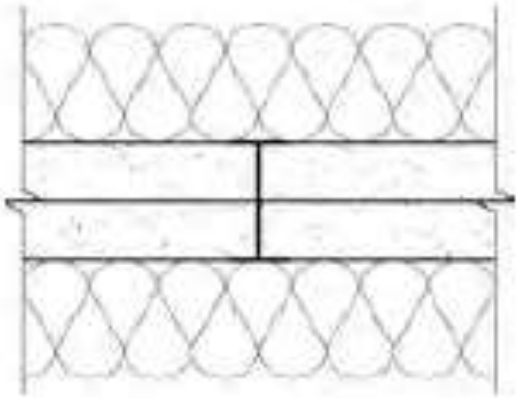

- (2) 1” Type X Gypsum
- 2” H Studs
- 2” mineral fiber insulation each side

Thickness:	6"
Approx. Weight:	9.6 psf
Fire Test:	WHI-495-0393, 1-14-82

Could install wood bearing wall on each side of 3 hour wall

3 Hour Fire Wall Assembly

3 Hour Fire-Rated Construction		
wt. 13 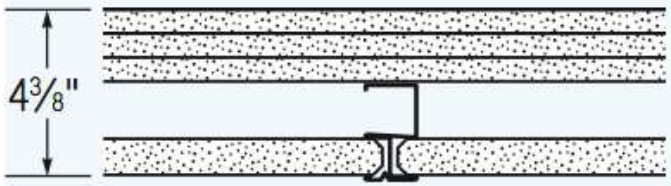 	• 5/8" SHEETROCK FIRECODE C Core gypsum panels, face layer joints finished • 2-1/2" USG C-H Studs 25 gauge 24" o.c. • 1" SHEETROCK gypsum liner panels	**UL Des U415, System G**
wt. 13 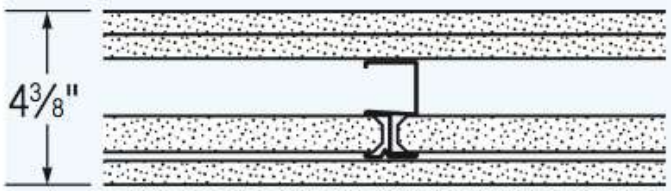 	• 5/8" SHEETROCK FIRECODE C Core gypsum panels, face layer joints finished • 2-1/2" USG C-H Studs 25 gauge 24" o.c. • 1" SHEETROCK gypsum liner panels • 5/8" SHEETROCK FIRECODE C Core gypsum panels, joints finished	**UL Des U415, System H**

Could install wood bearing wall on each side of 3 hour wall

Fire Walls – Seismic Diaphragm Continuity

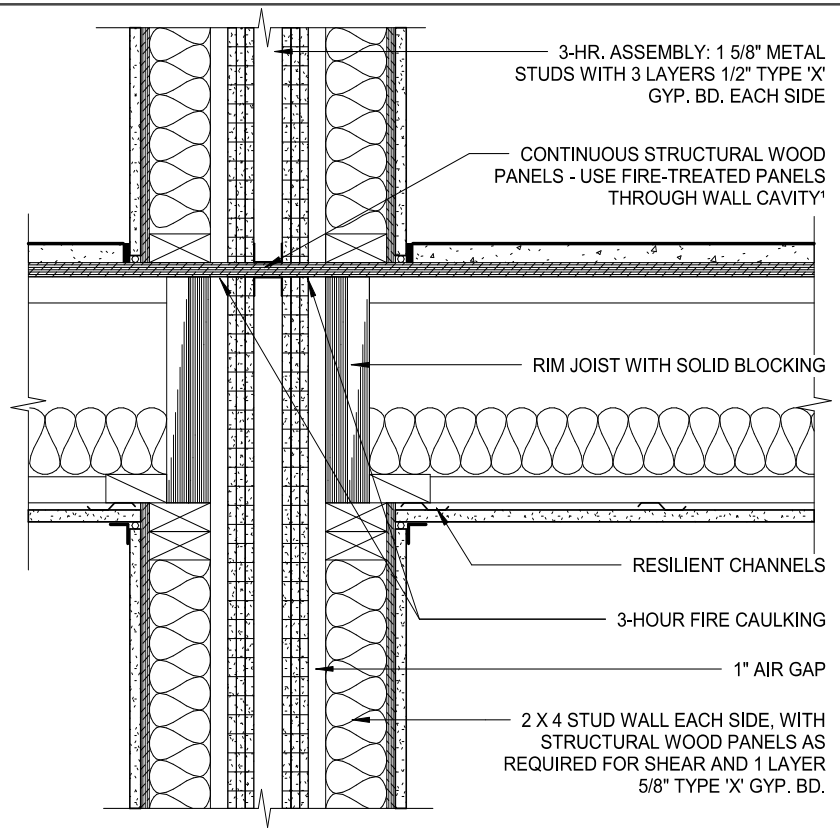

[1]CONSULT LOCAL JURISDICTION HAVING AUTHORITY FOR ACCEPTANCE OF FIRE-TREATED WOOD PANELS RUNNING THROUGH 3-HOUR ASSEMBLY IN THIS APPLICATION.

3-HOUR FIRE WALL AT FLOOR/CEILING

I-JOIST FRAMING WITH WOOD PANEL DIAPHRAGM RUNNING THROUGH FIRE WALL

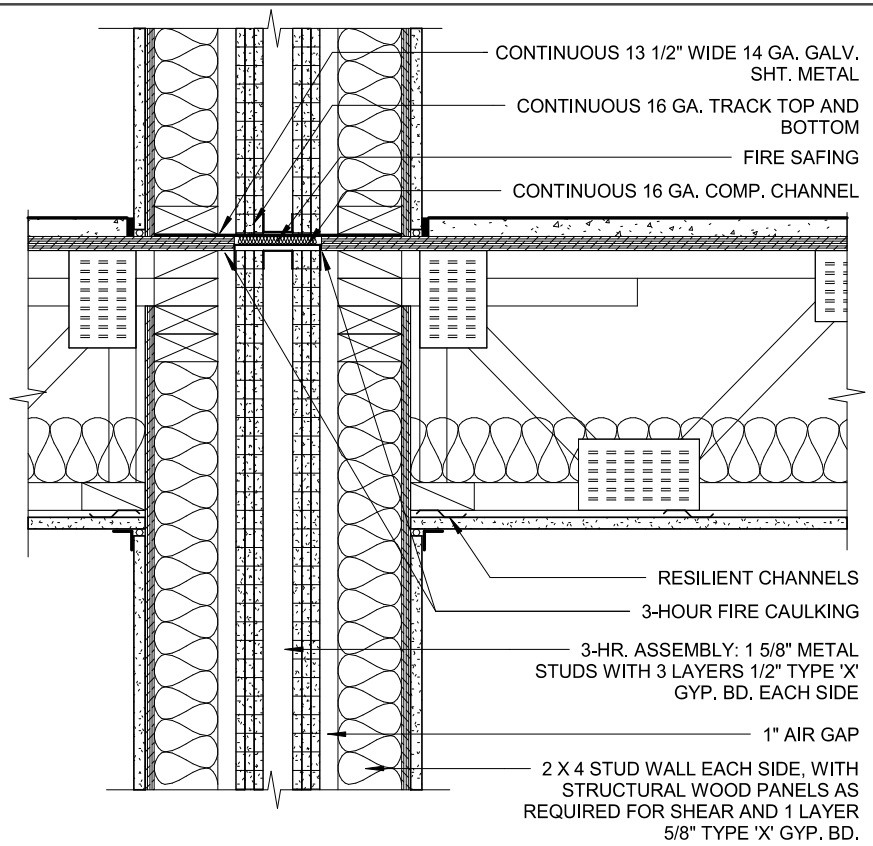

3-HOUR FIRE WALL AT FLOOR/CEILING

WOOD TRUSS FRAMING WITHOUT WOOD PANEL DIAPHRAGM RUNNING THROUGH FIRE WALL

CAD & Revit Details: www.woodworks.org

Fire Walls – Seismic Diaphragm Continuity

SEAOSC

SEAoSC LIGHT-FRAMING CONSTRUCTION COMMITTEE
STRUCTURAL ENGINEERS ASSOCIATION OF SOUTHERN CALIFORNIA
SEISMOLOGY OPINION

DATE: **March 21, 2008**

Continuity of Plywood Diaphragm Sheathing in 2 hr and 3hr Fire Walls:

Opinion: The continuity of plywood diaphragm sheathing should be maintained across the air gap commonly encountered in double stud Firewalls of 2 or 3 hour construction. The intent is to ensure that structural continuity is not significantly reduced in the roof and floor diaphragms.

Commentary:

This opinion is prepared to address the issue of diaphragm continuity as it relates to recent changes in 2007 CBC and 2006 IBC model code. Specifically the outgoing UBC provisions for Area-Separation walls have more or less been replaced by the Fire wall provisions of the IBC. Such walls are encountered in light-frame multifamily or mixed-use construction and are often constructed as a double studwall when occurring at partywall locations. The double stud walls are typically separated by an airspace of a one to four inches.

The IBC has introduced language [IBC 705.4] that states fire walls must have "sufficient structural stability" under fire conditions to allow collapse of either side. Previous commentary to the UBC topic of Area Separation

Fire Barriers – IBC 707

Commonly used in:

- Shaft enclosures
- Interior exit stairway
- Exit stairway enclosures
- Exit passageways
- Incidental uses
- Separated occupancies
- Fire Areas

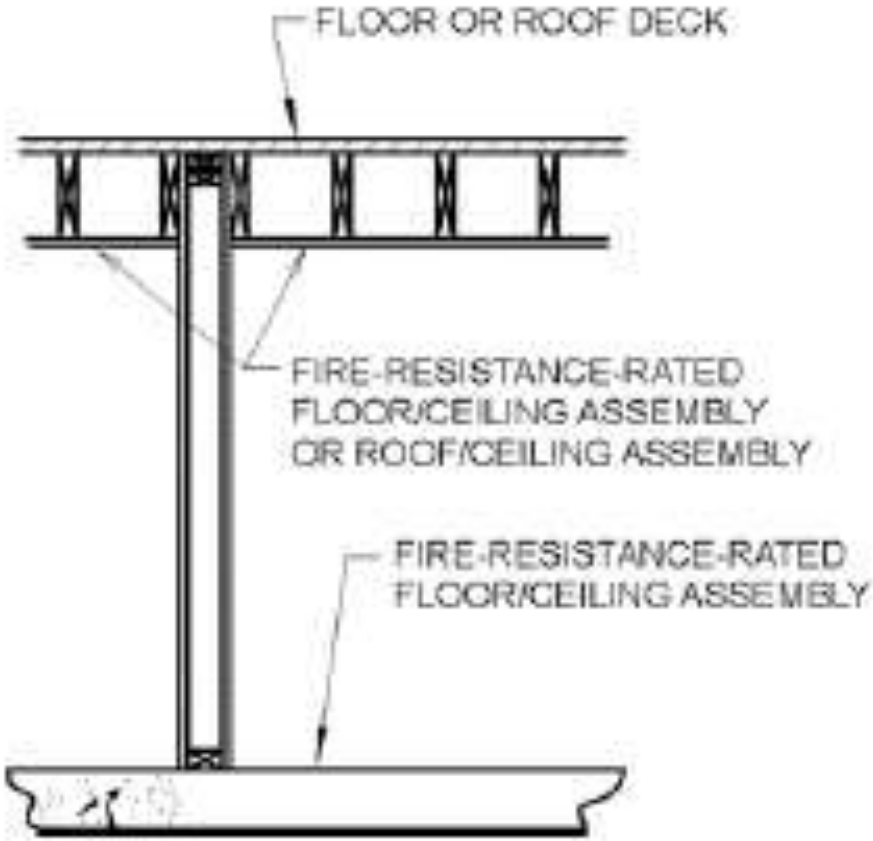

Fire Barrier Example

2012 IBC Code & Commentary

Fire Barriers – IBC 707

Fire Barriers:

- May be constructed with any materials permitted by the construction type
- Fire Resistance Ratings:
- Shaft Enclosures: IBC 713.4
    - 2 Hr when connecting 4 stories or more, 1 hr if less
- Separated Occupancies: IBC Table 508.4
- Fire Areas: IBC Table 707.3.10

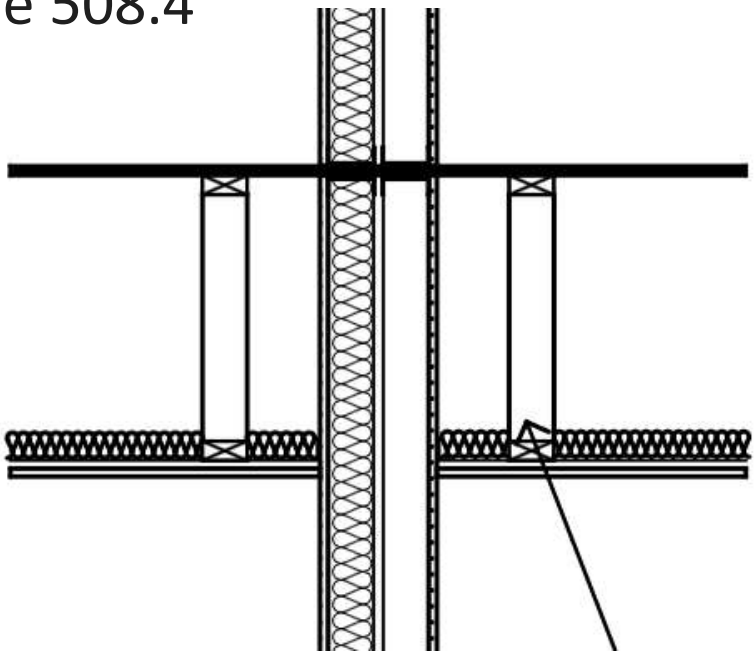

Fire Barriers – IBC 707

707.5: Continuity: Fire barriers shall extend from the top of the foundation or floor/ceiling assembly below to the underside of the floor or roof sheathing, slab or deck above and shall be securely attached thereto. Such fire barriers shall be continuous through concealed space, such as the space above a suspended ceiling

707.5.1 Supporting Construction: The supporting construction for a fire barrier shall be protected to afford the required fire-resistance rating of the fire barrier supported. Hollow vertical spaces within a fire barrier shall be fireblocked in accordance with Section 718.2 at every floor level.

Other requirements for openings, penetrations, joints

Fire Barriers – IBC 707

Common Detailing Method: Fire Barrier & membrane extend to underside of floor deck above

Fire Partitions – IBC 708

Commonly used to separate:

- Dwelling or sleeping units in same bldg.
- Tenant spaces in malls
- Corridor walls

Minimum 1 hr rating except:

- Some corridors
- Separate dwelling units in VB and IIB

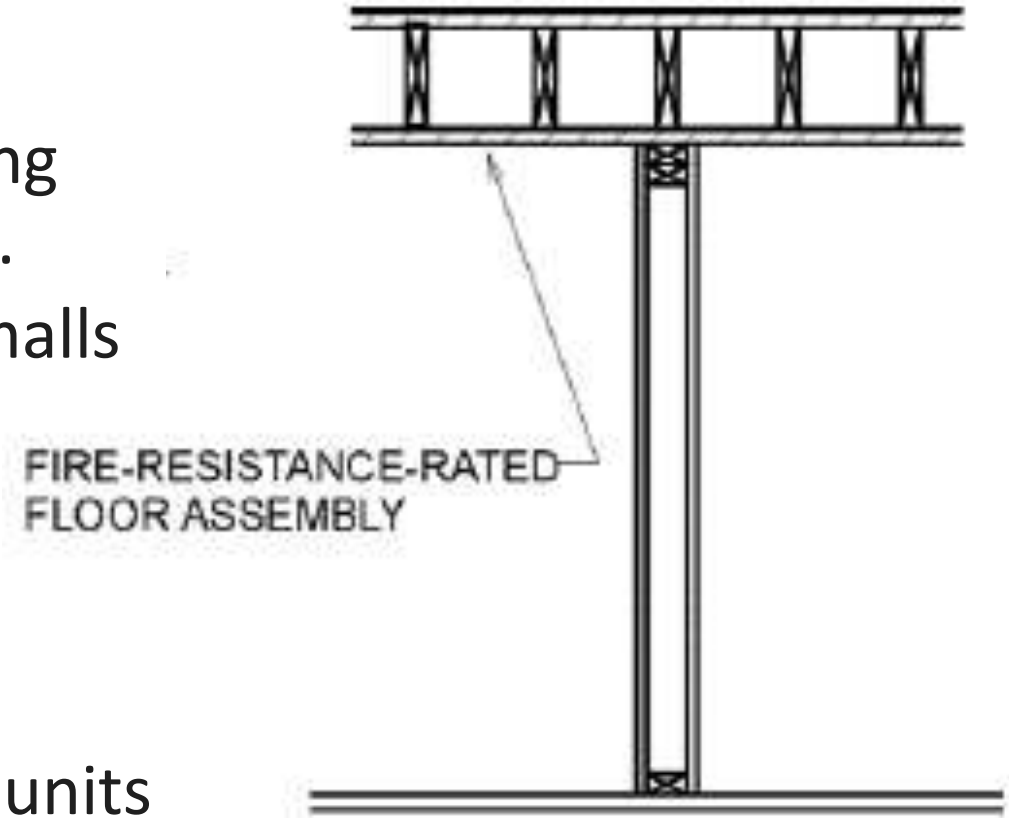

Fire Partition Example

2012 IBC Code & Commentary

Fire Partitions – IBC 708

<u>Fire Partitions:</u>

- May be constructed with any materials permitted by the construction type
- 708.3 Fire Resistance Ratings:
- Fire partitions shall have a *fire-resistance rating* of not less than 1 hour.

Exceptions:

1. Corridor walls permitted to have a $^{1}/_{2}$ hour fire-resistance rating by Table 1018.1.

2. Dwelling unit and sleeping unit separations in buildings of Type IIB, IIIB and VB construction shall have fire-resistance ratings of not less than $^{1}/_{2}$ hour in buildings equipped throughout with an automatic sprinkler system in accordance with Section 903.3.1.1.

Fire Partitions – IBC 708

708.4 Continuity.

Fire partitions shall extend from the top of the foundation or floor/ceiling assembly below to the underside of the floor or roof sheathing, slab or deck above or to the fire-resistance-rated floor/ceiling or roof/ceiling assembly above, and shall be securely attached thereto. In combustible construction where the *fire partitions* are not required to be continuous to the sheathing, deck or slab, the space between the ceiling and the sheathing, deck or slab above shall be fireblocked or draftstopped in accordance with Section 718.2 and 718.3 at the partition line.

The supporting construction shall be supported to afford the required fire-resistance rating of the wall supported, except for...walls separating dwelling units, walls separating sleeping units, and corridor walls, in buildings of Type IIB, IIIB and VB construction.

Fire Partitions – IBC 707

Common Detailing Method: Fire Partition & membrane stop at underside of rated floor/ceiling with fireblocking/draftstopping if required

Outline

- Mid-Rise Construction Types & Life Safety Review
- Structural Design & Detailing Considerations
- Shrinkage Considerations & Detailing
- Acoustic Requirements & Detailing
- Fire Resistive Requirements and Detailing
    - Exterior Walls
    - Floor to Wall Detailing
    - Interior Walls
    - Shaft Walls
    - Corridors & Balconies

Detailing: Shaft Walls vs. Exterior Walls

IBC 713.2: Shaft Walls shall be constructed as Fire Barriers

Key Differences between Exterior Walls and Shaft Walls (Fire Barriers)

- **Continuity**
- **Supporting Construction**
- **Fire Resistance Ratings**
- **Construction Materials**

Detailing: Shaft Walls vs. Exterior Walls

Shaft Wall Requirements:

707.5: Fire Barrier Continuity:

- Must extend from top of the foundation or floor/ceiling assembly below to the underside of the floor or roof sheathing
- Through concealed spaces

707.5.1: Supporting Construction:

- The supporting construction for a fire barrier shall be protected to afford the required fire-resistance rating of the fire barrier supported.

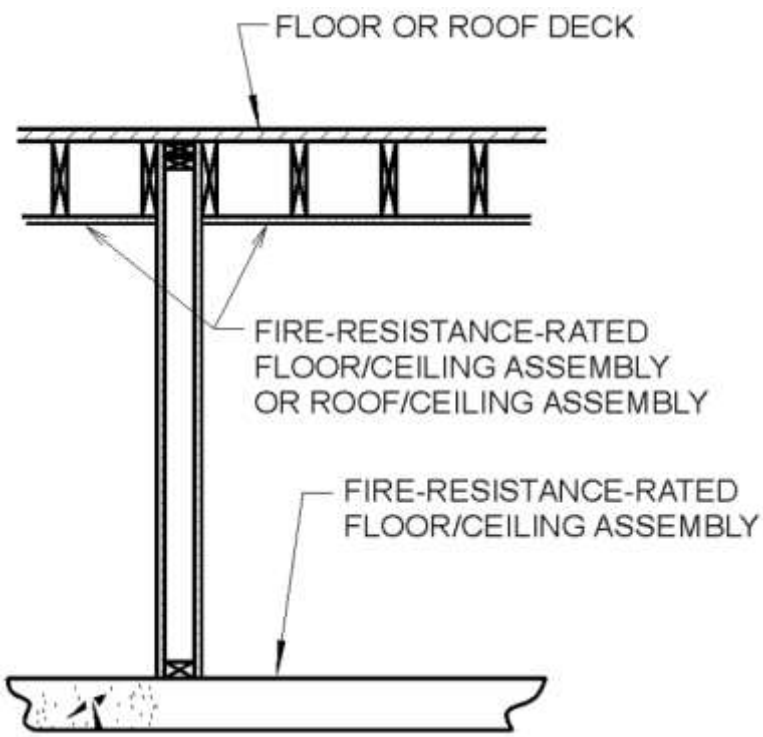

Detailing: Shaft Walls vs. Exterior Walls

Shaft Wall Requirements:

713.4 Fire-Resistance Rating:

- 2 hours (4 stories or more)
- 1 hour (less than 4 stories)
- Number of connected stories includes basement but not mezzanine
- Fire rating shall not be less than floor assembly penetrated, but need not exceed 2 hours

707.2: Construction Materials:

- Any permitted by construction type
  - FRTW not required for shaft walls in types III, IV, V

Detailing: Shaft Walls vs. Exterior Walls

How do we achieve these requirements?

Continuity: The general requirements in 707.5 were not written with platform construction in mind . . . they were attempting to preclude large open concealed spaces to provide a continuous barrier between one portion of the building and another

Many jurisdictions have recognized that continuity of the fire barrier's fire protection can be maintained even if the wall framing does not extend to the underside of the decking above

Detailing: Shaft Walls vs. Exterior Walls

Supporting Construction:
Must have same fire resistance rating as fire barrier being supported

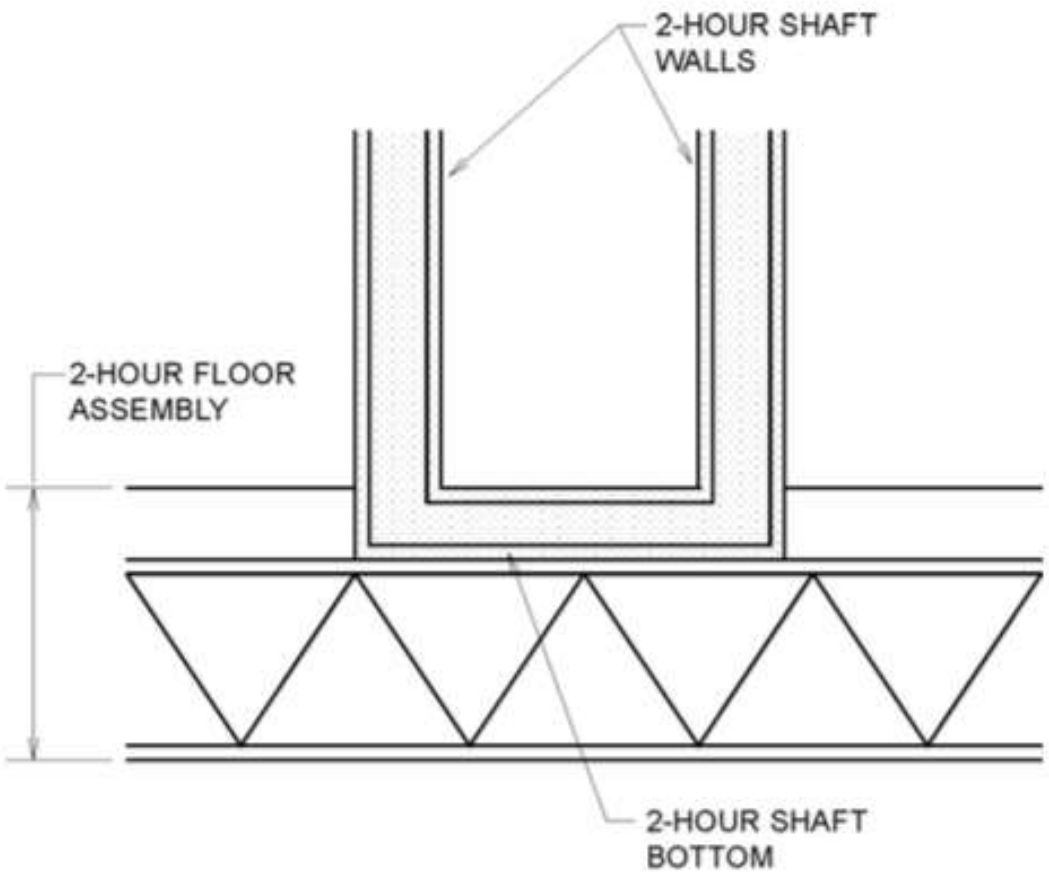

NOTE: 2-HOUR SHAFT IS TO BE SUPPORTED BY NO LESS THAN A 2-HOUR ASSEMBLY (SECTION 707.5)

Detailing: Shaft Walls vs. Exterior Walls

Supporting Construction: In platform and semi-balloon frame construction, if we have a 2 hour shaft wall and a 1 hour floor, how do we achieve this?

If we are able to demonstrate the wall's 2 hour continuity, should not need to consider the floor "supporting construction"?

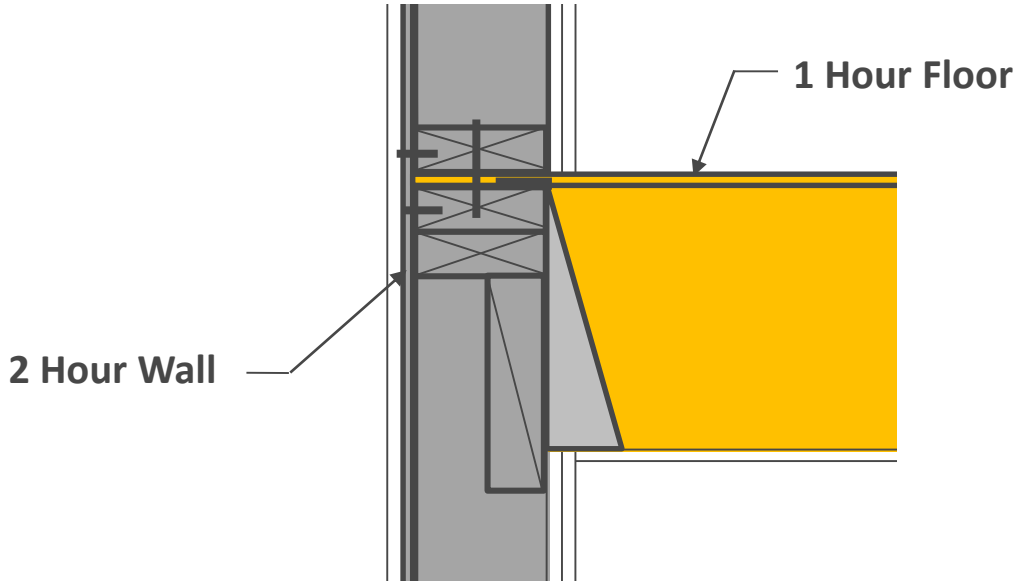

Detailing: Shaft Walls vs. Exterior Walls

Types of Shafts:

- **Elevator**
- **Stair**
- **Mechanical**

Some points of shaft wall construction apply to any type of shaft. Some are unique to each type of shaft.

Shaft Walls

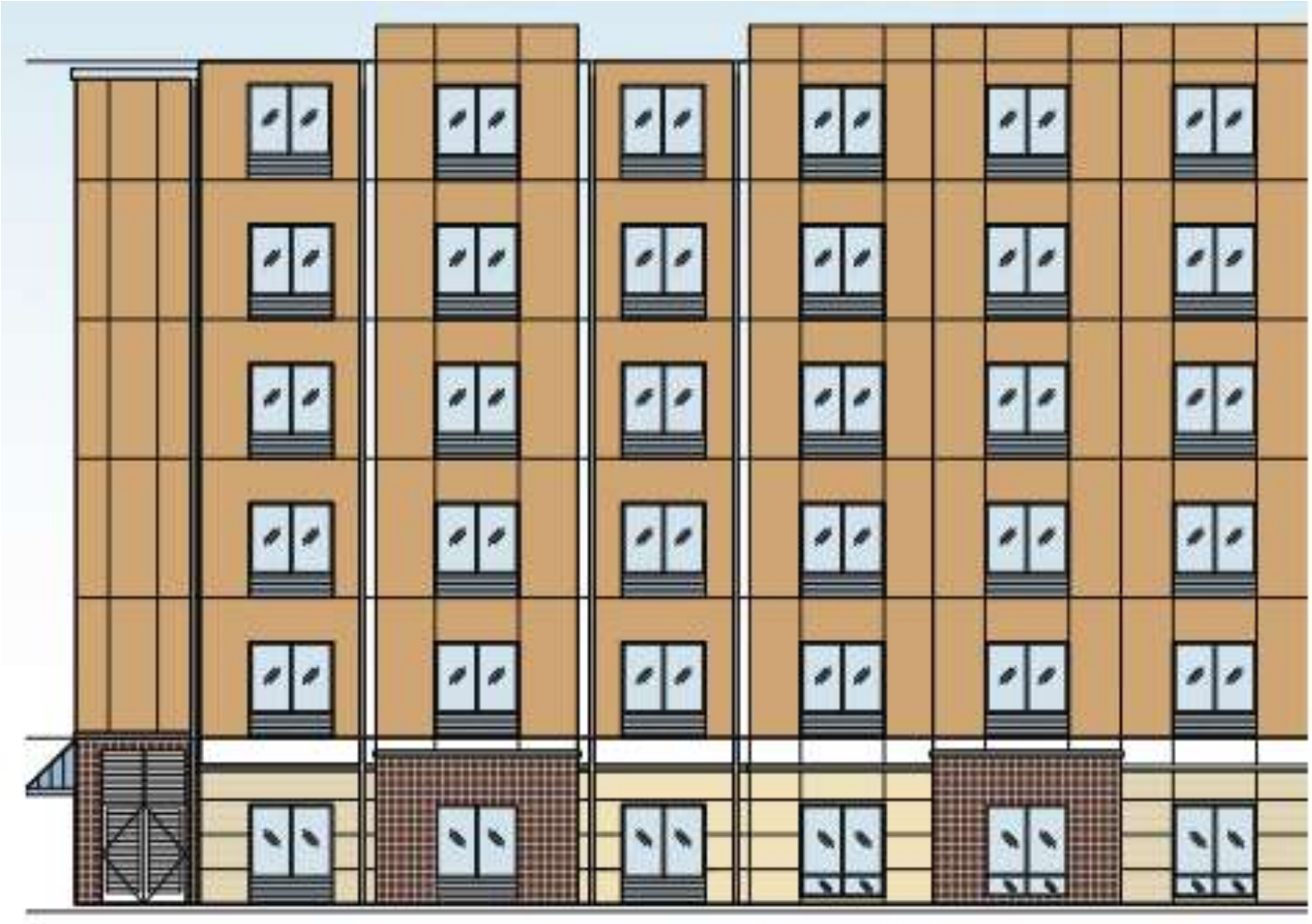

Shaft Walls

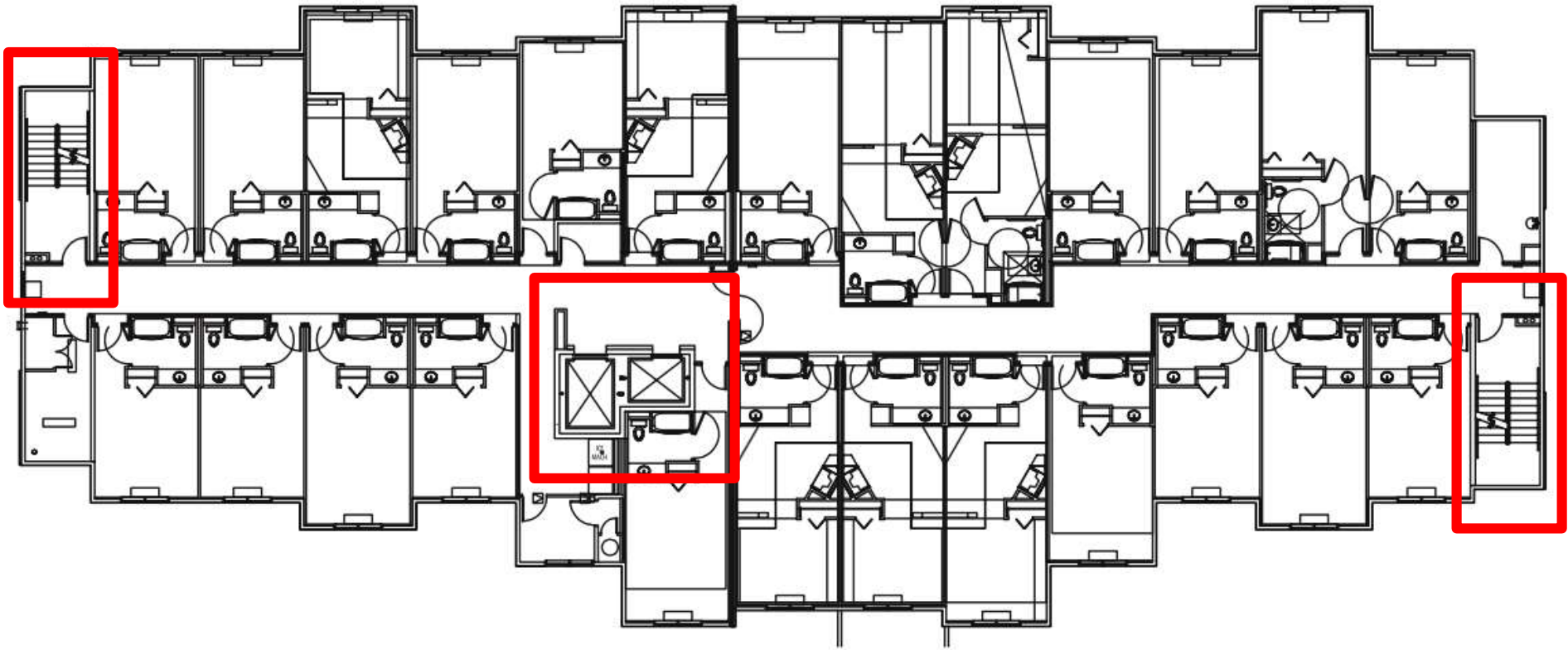

Masonry Shaft Walls

Masonry Shaft Walls

Masonry Shaft Walls

Masonry Shaft Walls

Mixing masonry shaft walls with wood floor framing can create several issues:

- **Masonry shaft walls can become part of building's lateral force resisting system, increasing seismic forces and adding mass**
- **Differential shrinkage between wood and masonry**
- **Best practices include seismically isolating masonry shaft walls, only tie wood floor to masonry shaft where required (i.e. at elevator door threshold)**

Masonry Shaft Walls

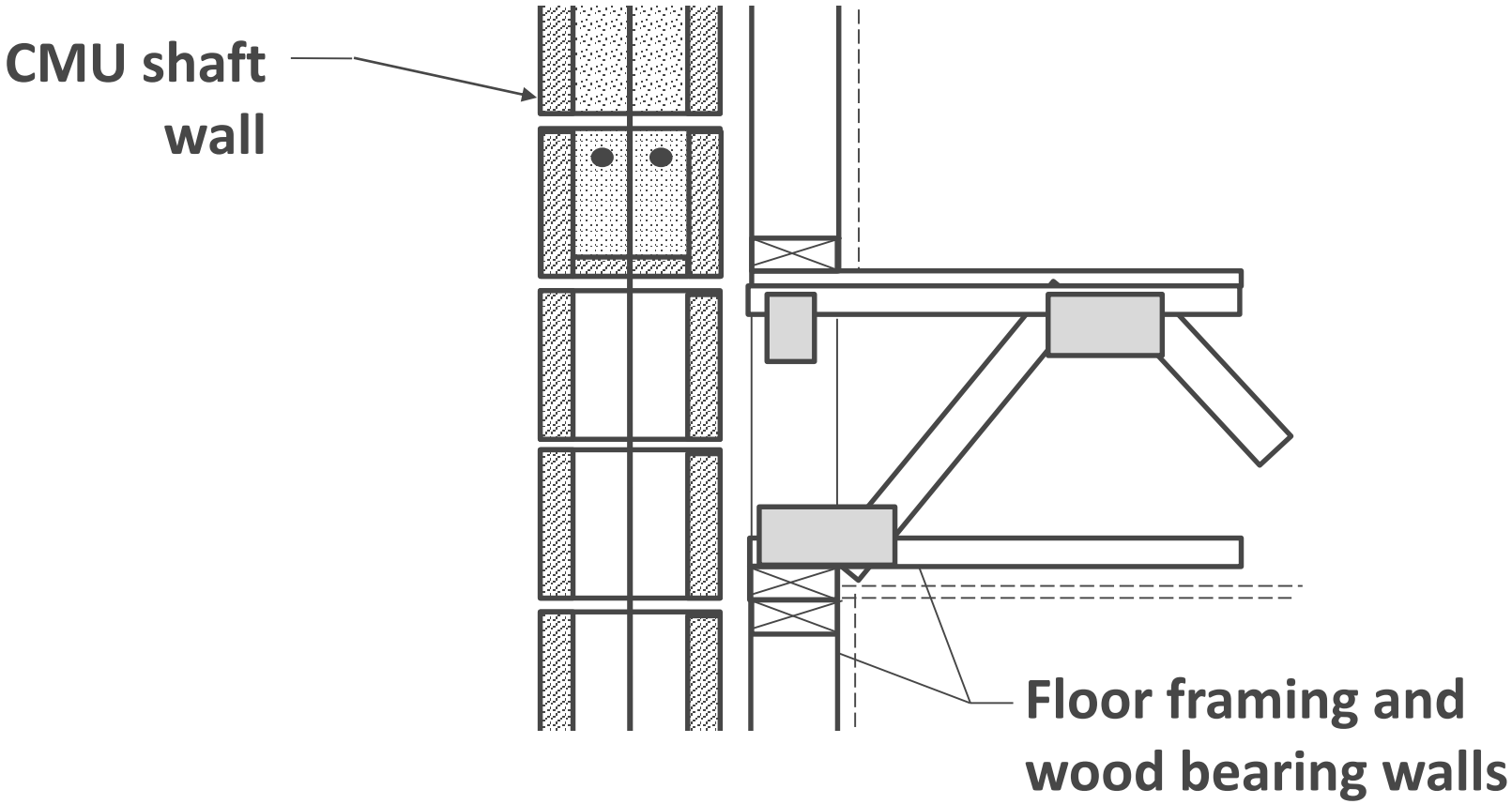

Masonry Shaft Wall Detail

Masonry Shaft Walls

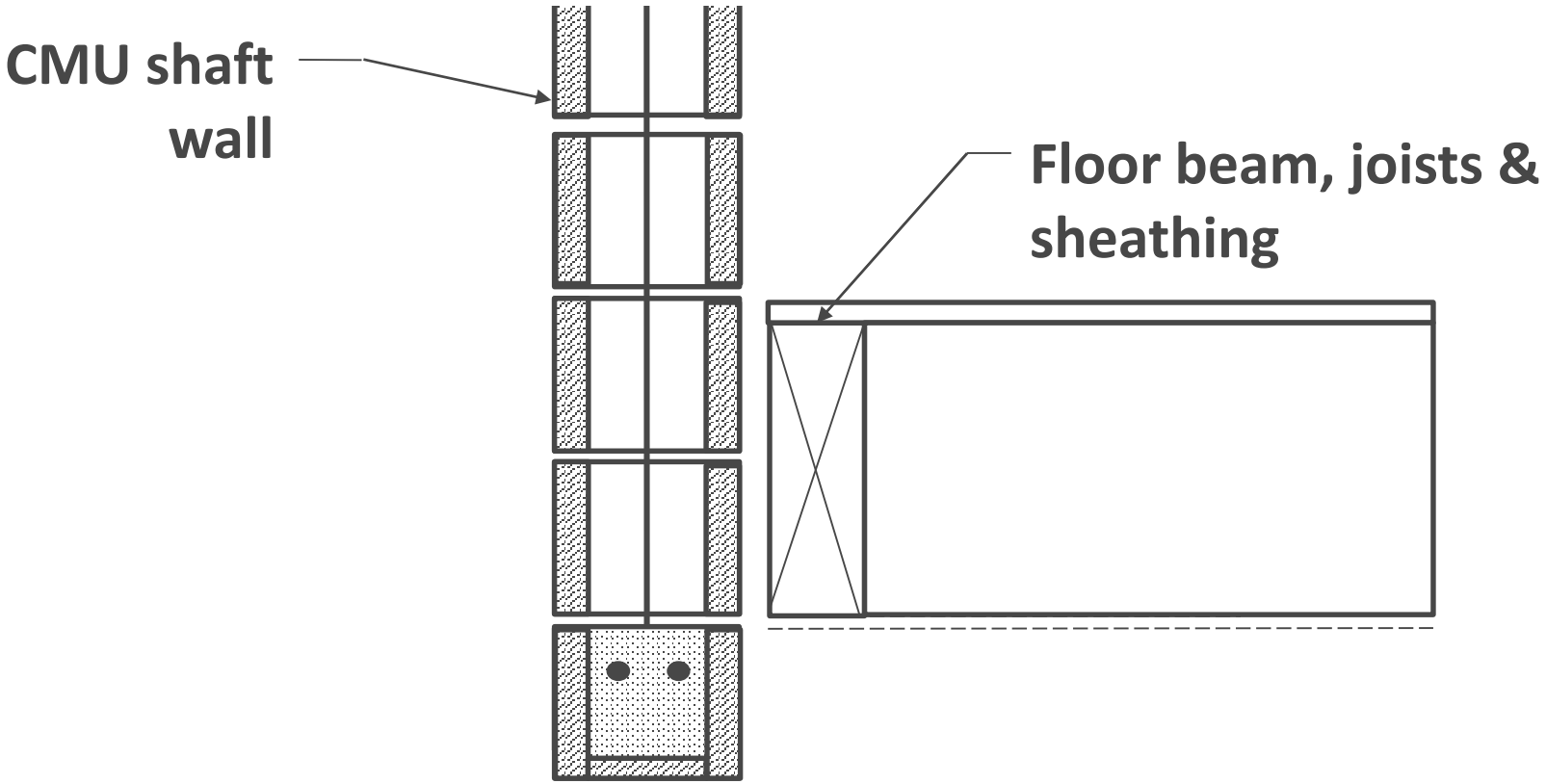

Masonry Shaft Wall Detail

Shaft Wall Material Choice

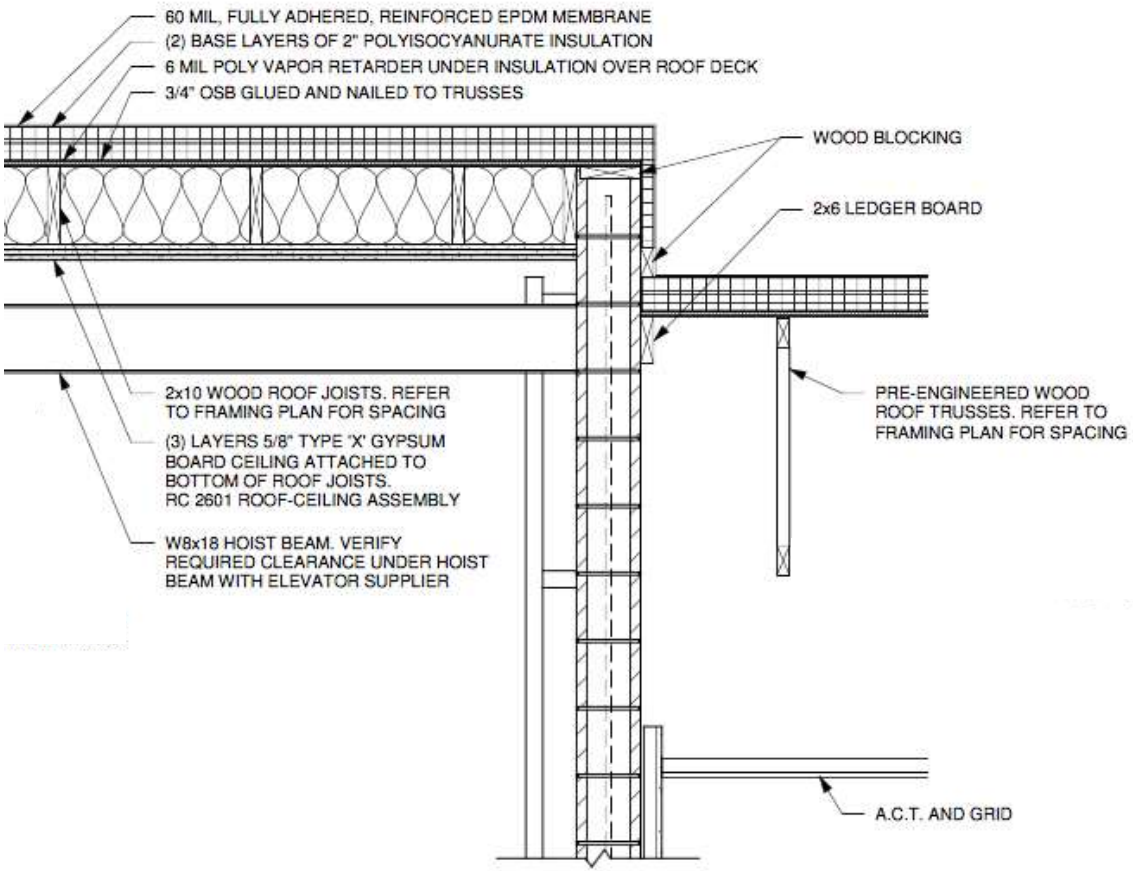

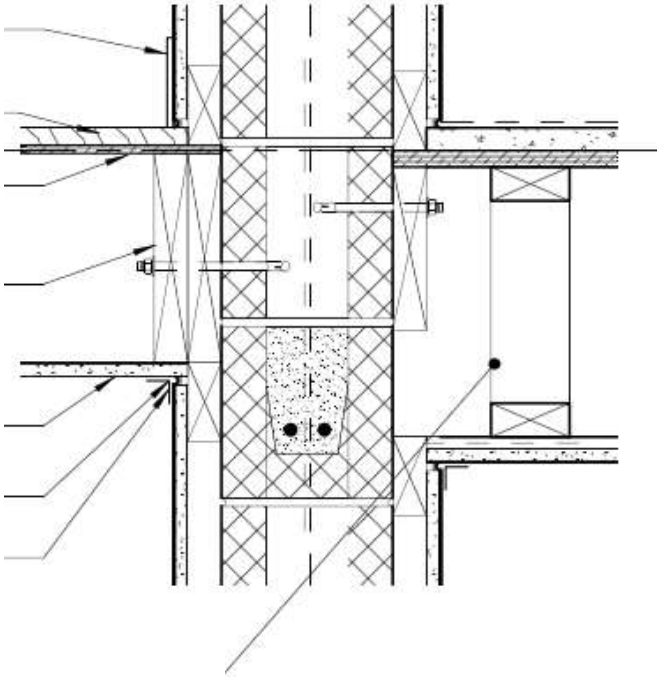

Why do we introduce new materials for our shaft walls?
They can be framed with wood!

Wood Framed Shaft Walls

Wood Framed Shaft Walls

Using wood framed shaft walls can:

- Eliminate lateral load considerations associated with attaching wood diaphragms to concrete or masonry shaft walls (SDPWS 4.1.5)
- Eliminate differential shrinkage at floor to wall transition
- Eliminate different construction trades in building during construction
- Reduce costs
- Improve schedule

Shaft Wall Details

Shaft Side

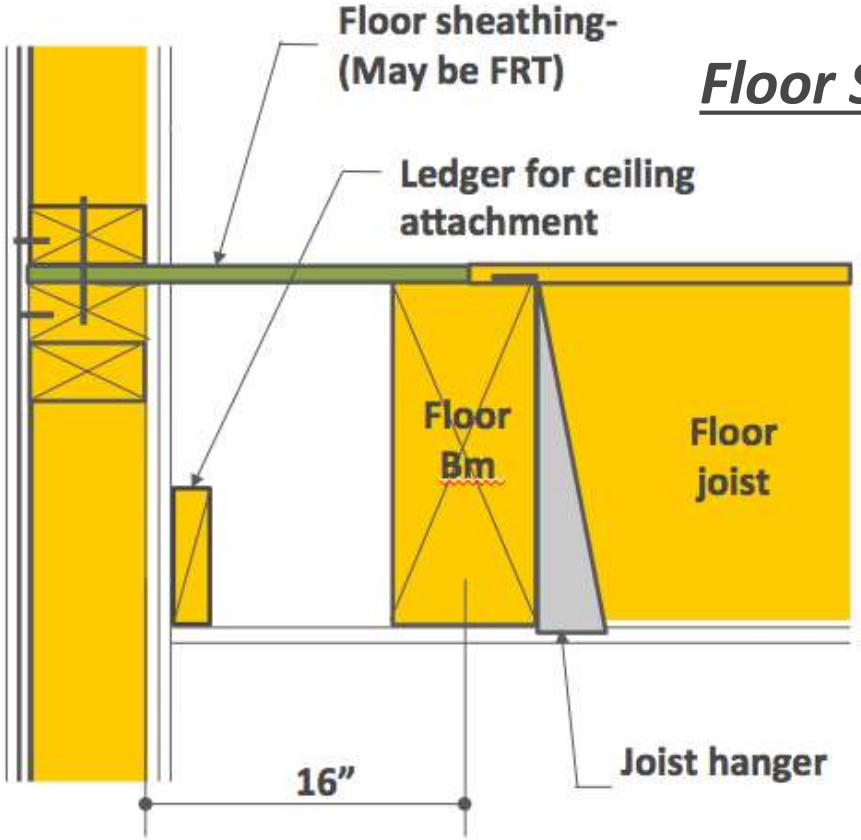

Floor Side

Rationale for detail approval:

- Membranes on both sides of wall provide fire resistance via their approved assembly and are continuous. FRT floor sheathing can be insurance for minimal penetration of membrane.

Shaft Walls w/Shaftliner

Shaft Side

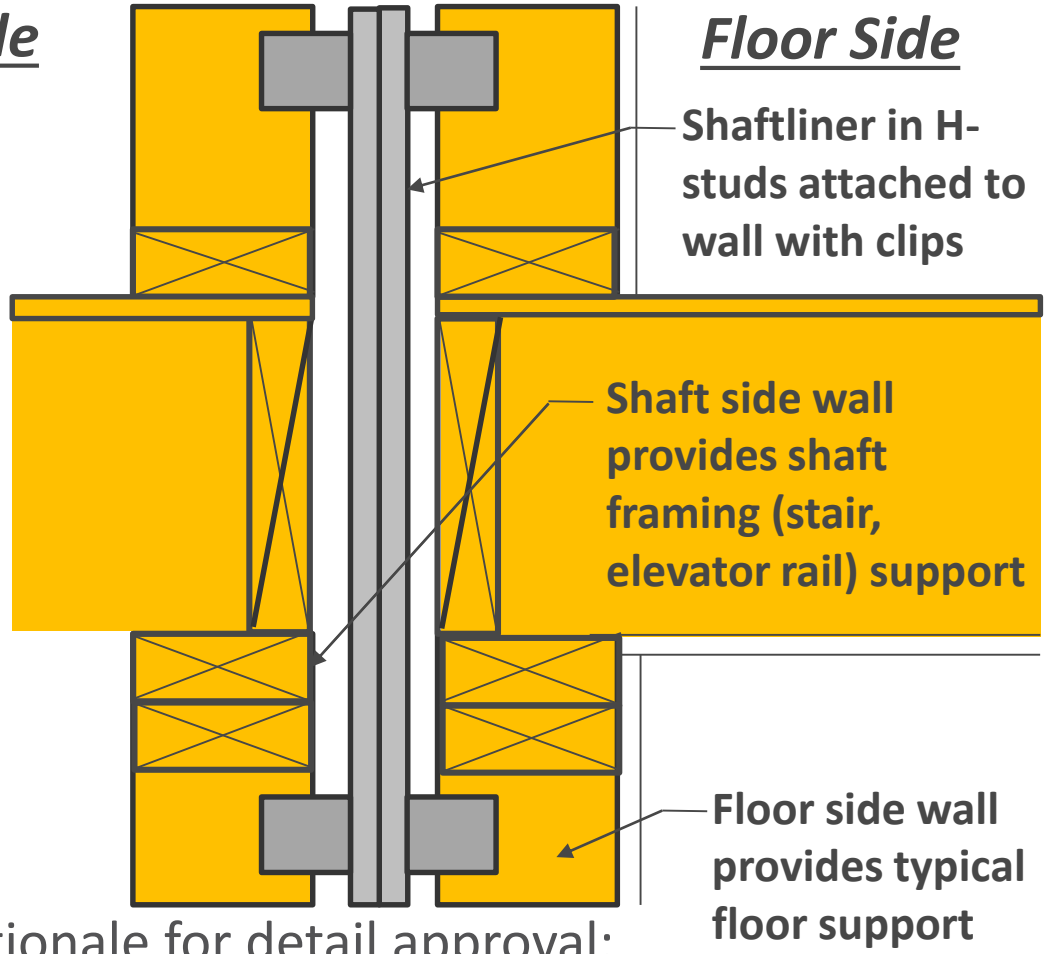

Rationale for detail approval:

- Shaft liner assembly provides fire resistance independent of framing material on either side.

Shaft Walls w/H Studs & Shaftliner

2-Hour Fire Rating

Design Reference: UL U373, ULC W312, WHI GP/WA 120-03, cUL U373

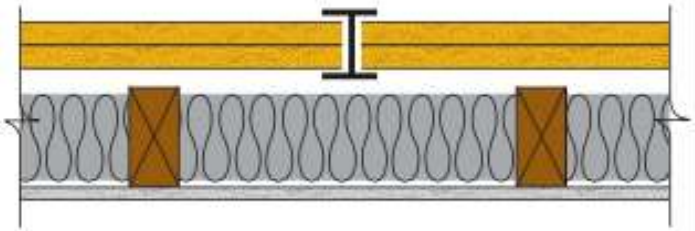

59 STC Sound Trans.

Test Reference: RAL TL 10-290

Two layers 1" (25.4 mm) DensGlass Shaftliner inserted in H-Studs 24" (610 mm) o.c. Min. 3/4" (19 mm) air space between liner panels and adjacent wood or metal framing.

Sound Tested with 2"x 4" stud wall with 1/2" (12.7 mm) ToughRock® wallboard or DensArmor Plus® interior panels and 3-1/2" (89 mm) fiberglass insulation in stud space.

Source: Georgia Pacific

Fire Rated System Design - UL U529

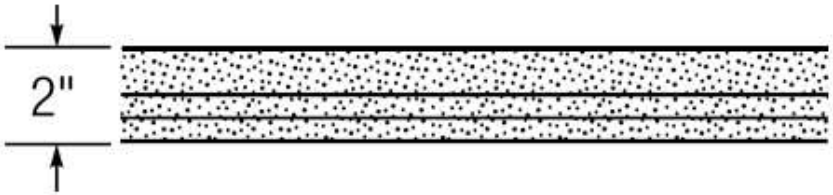

UL U529

Shaft Wall -Solid (no stud)

Fire Rating	2 hour
System Thickness	2"

Source: US Gypsum

Shaft Walls w/H Studs & Shaftliner

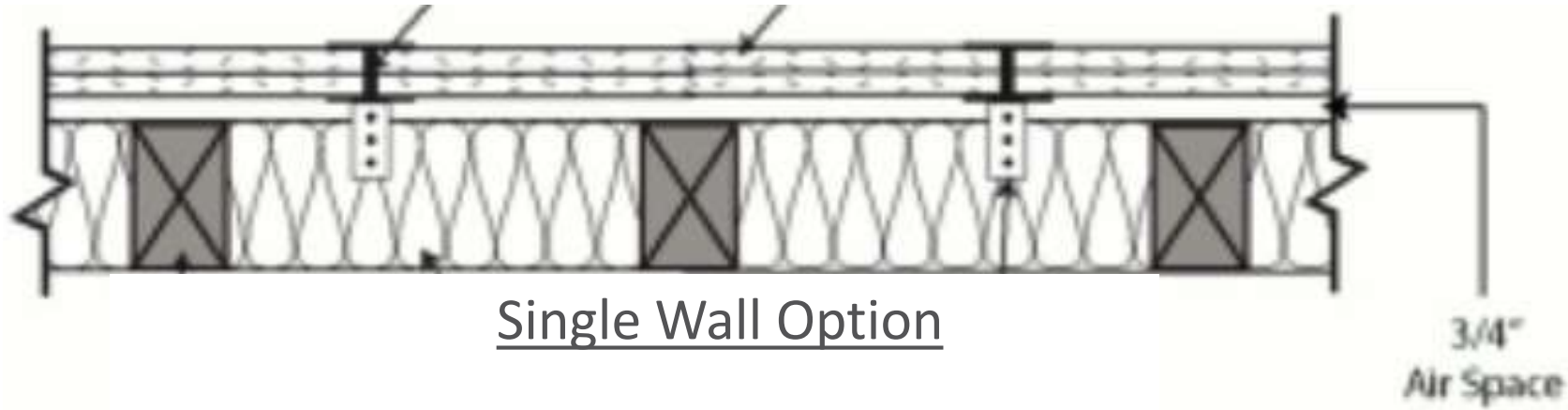

Single Wall Option

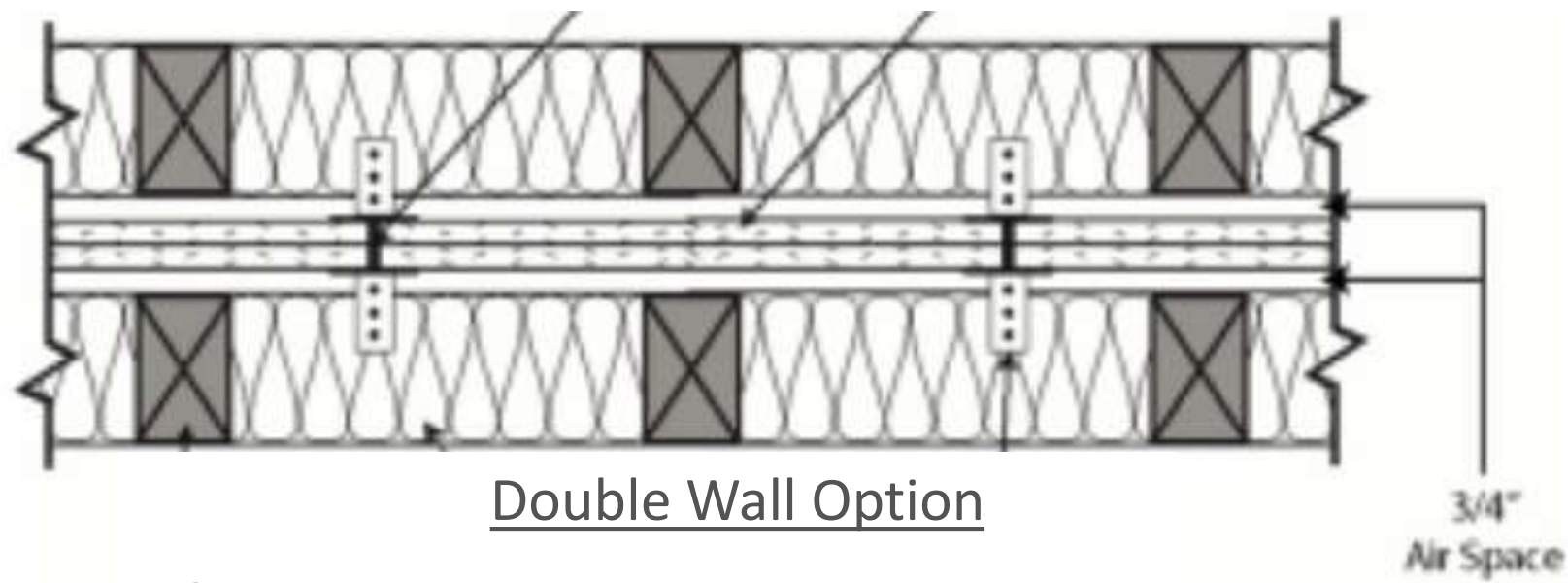

Double Wall Option

Source: UL U375

Shaft Walls w/H Studs & Shaftliner

H Stud Attachment Clips

Attachment Clips: Aluminum or steel angles, usually 14 – 16 gauge, 2” wide with 2” to 2-1/2” long legs. Attaches to wall framing and H-studs

H-Stud

Source: Clarkdietrich

Example Shaftliner Clip Attachment Schedule per UL U375		
System No.	System Height Limitation	Attachment Clip Schedule
1	23 ft	10 ft o.c.
2	44 ft	Base to 20 ft: 5 ft o.c. 20 ft to 44 ft: 10 ft o.c.
3	66 ft	Base to 22 ft: 3’-4” o.c. 22 ft to 42 ft: 5 ft o.c. 42 ft to 66 ft: 10 ft o.c.

Shaft Walls w/Shaftliner

Can also utilize wood framed shaft walls on 3 sides and CH studs with shaftliner on 4th side

Shaft Walls w/CH or CT Studs

2 hour walls with C-H Studs, shaft liner, and gypsum panels

Shaftwall

Stairwall

Shaft Walls w/CH or CT Studs

UL U415 System B or BSA 542-68-SM

Shaft Wall -Steel Stud (Non-loadbearing)

Fire Rating	2 hour
STC	48
Sound Test	RAL-OT04-022
System Thickness	3-1/2"

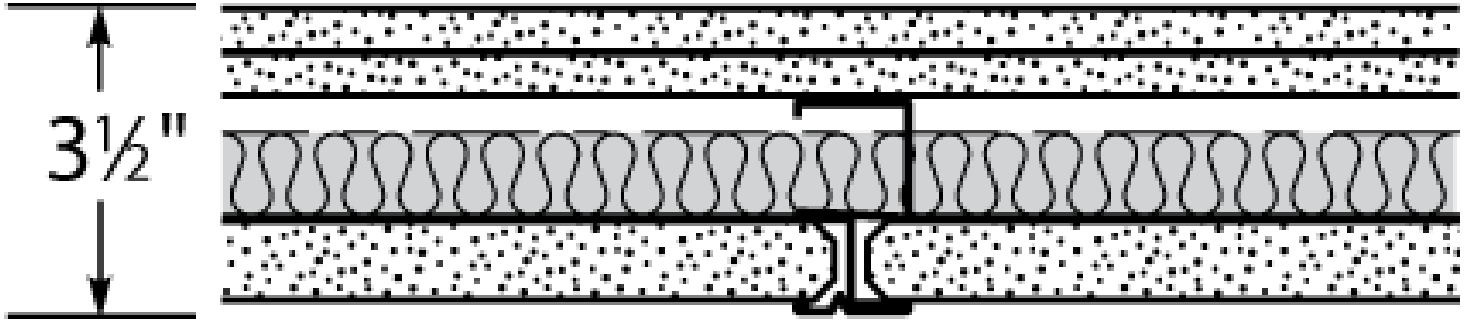

Shaft Walls w/CH or CT Studs

CT STUD LIMITING HEIGHTS (INTERIOR NONLOAD-BEARING)

Member	Deflection	5 PSF	7.5 PSF	10 PSF	15 PSF
2-1/2" 25ga	L/120	16'-10"	13'-8"	11'-10"*	8'-6"*
	L/240	11'-10"	9'-10"	8'-8"	7'-3"
	L/360	9'-10"	8'-3"	7'-3"	6'-2"

Source: Clarkdietrich

Some wall manufacturers will list a total system height limitation. If this is not a requirement of the tested assembly (i.e. UL or sim. requirement) can also perform a structural analysis of the walls, especially when stacking multiple stories, to verify adequacy

Stairway Shaft Enclosures & Framing

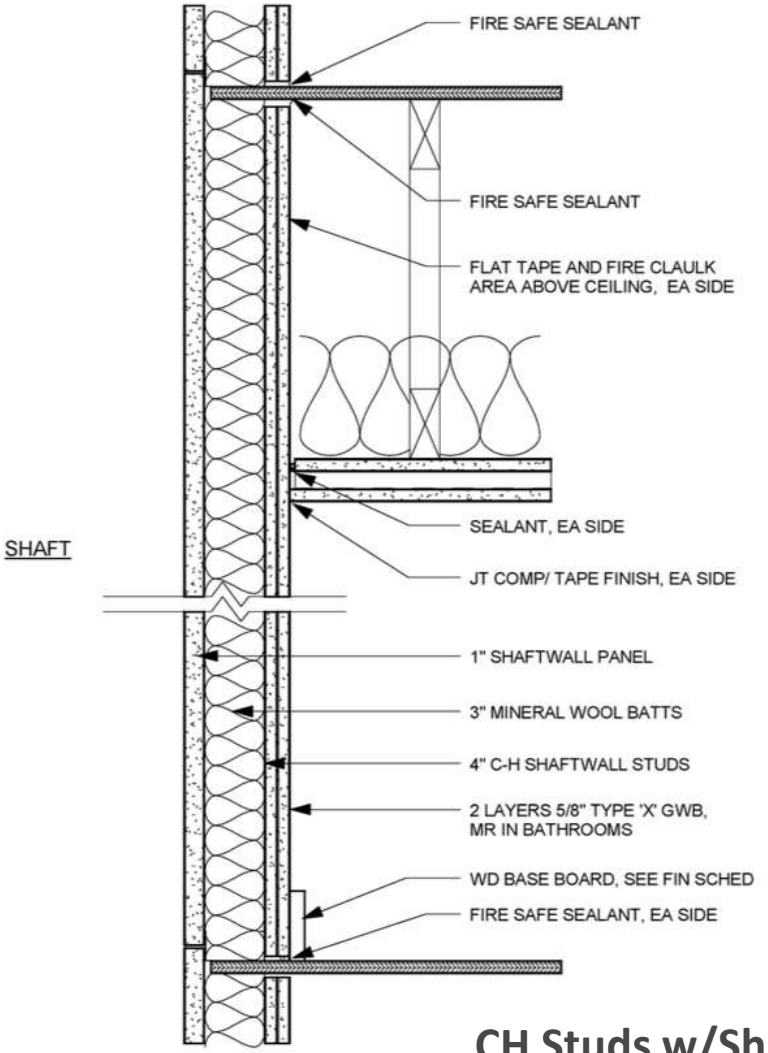

23 WALL TYPE - 23
2 HOUR RATED SHAFTWALL

Wood Framed Wall on 3 Sides of Shaft

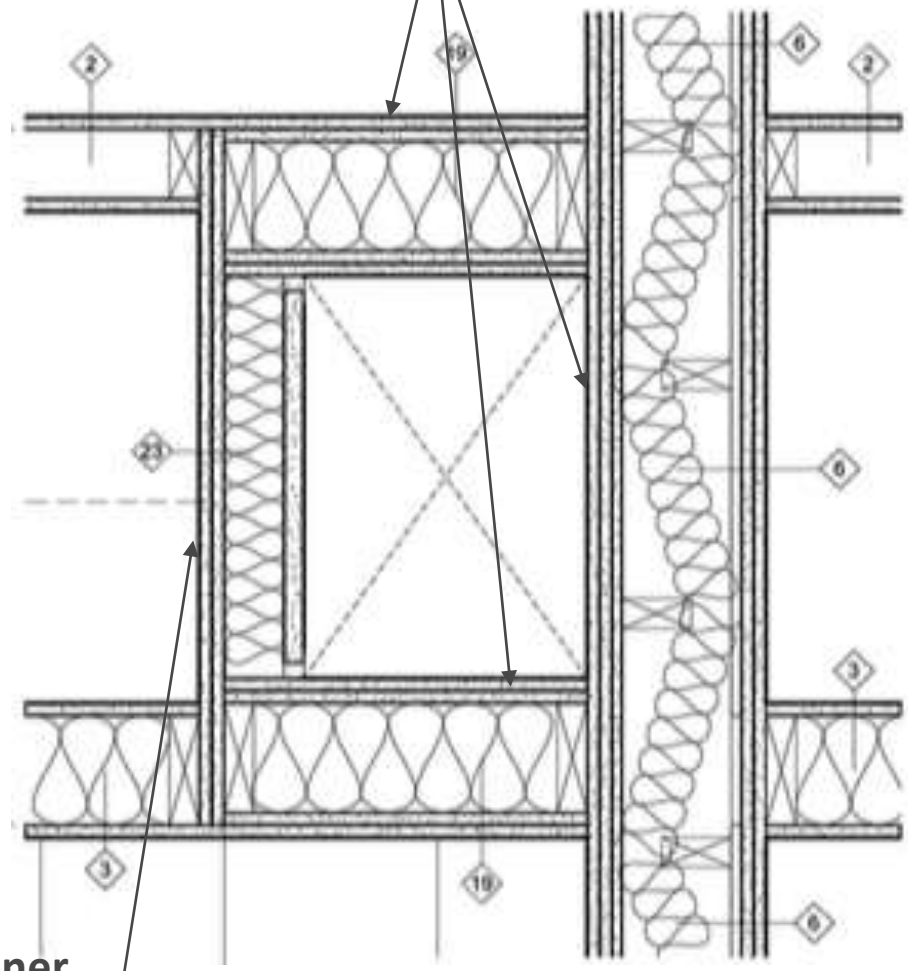

CH Studs w/Shaftliner on 4th Side of Shaft

Elevator Shaft Walls

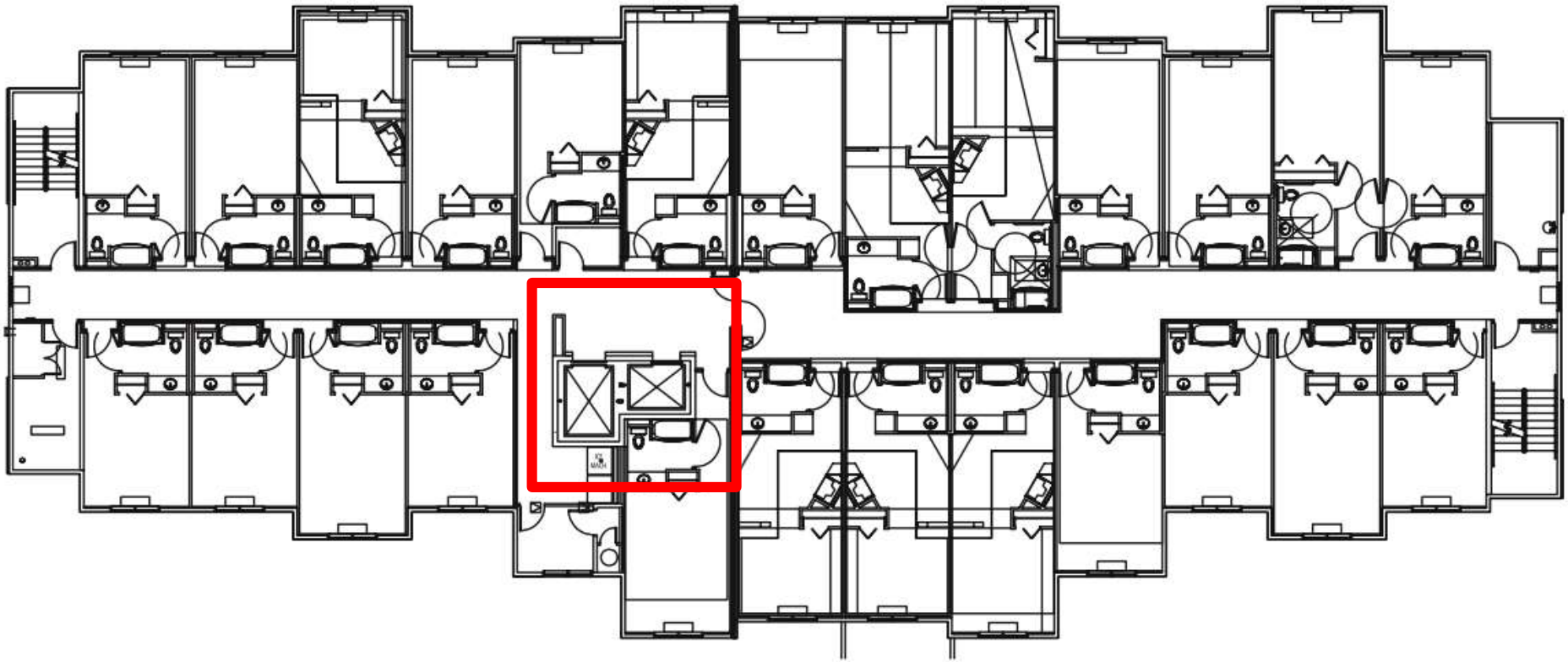

Elevator Shaft Walls

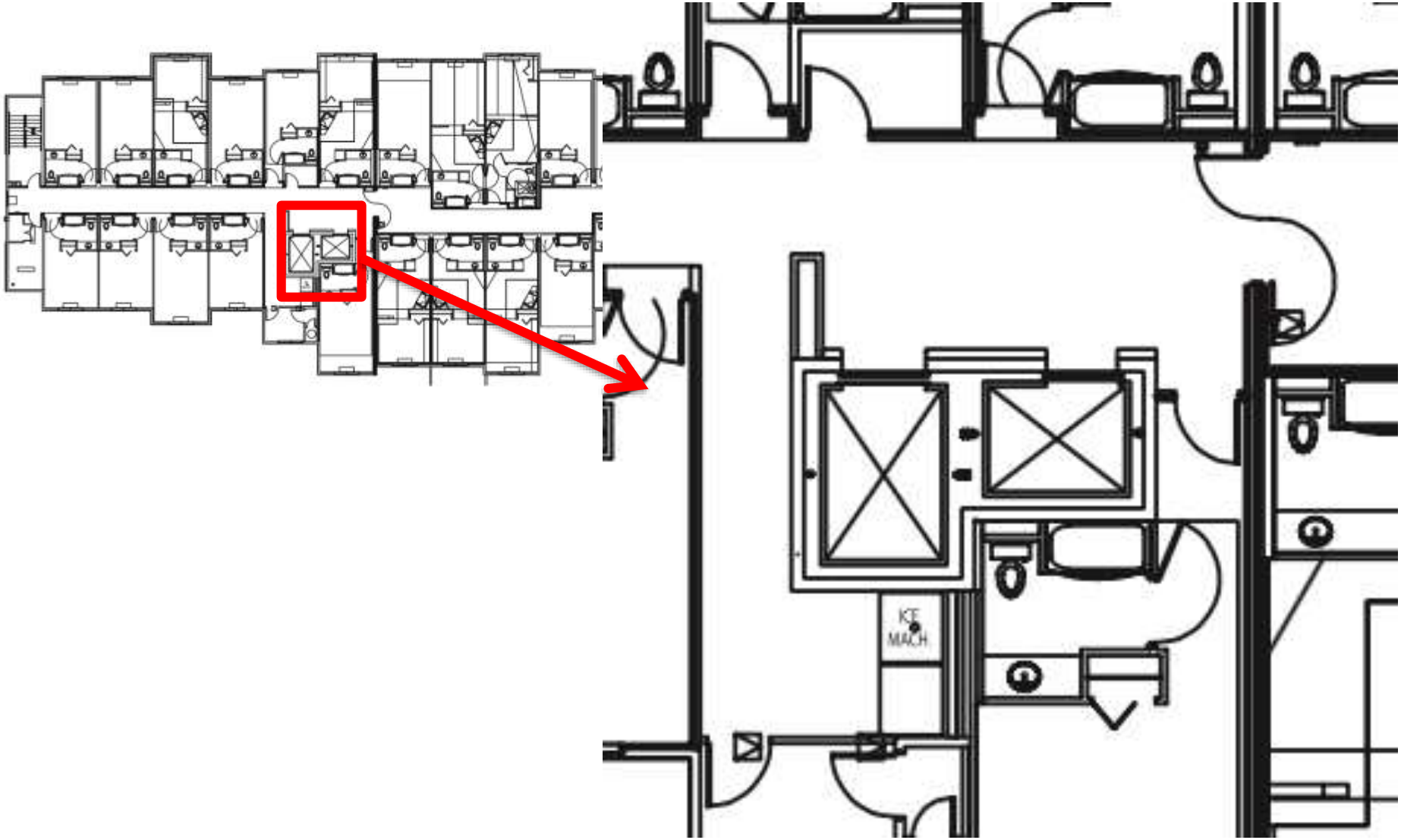

Wood Framed Elevator Shaft Wall

Wood Framed Elevator Rail Supports

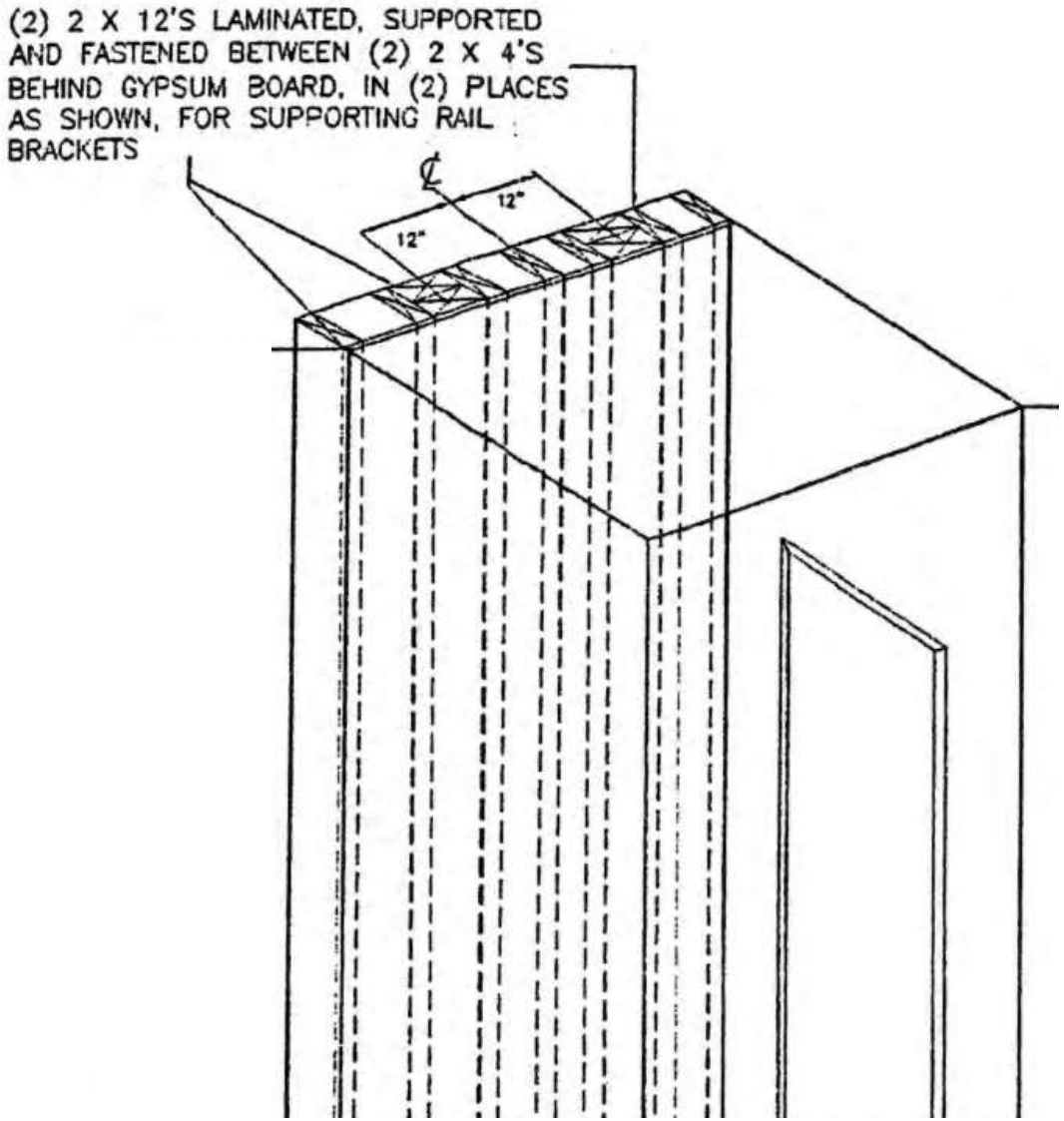

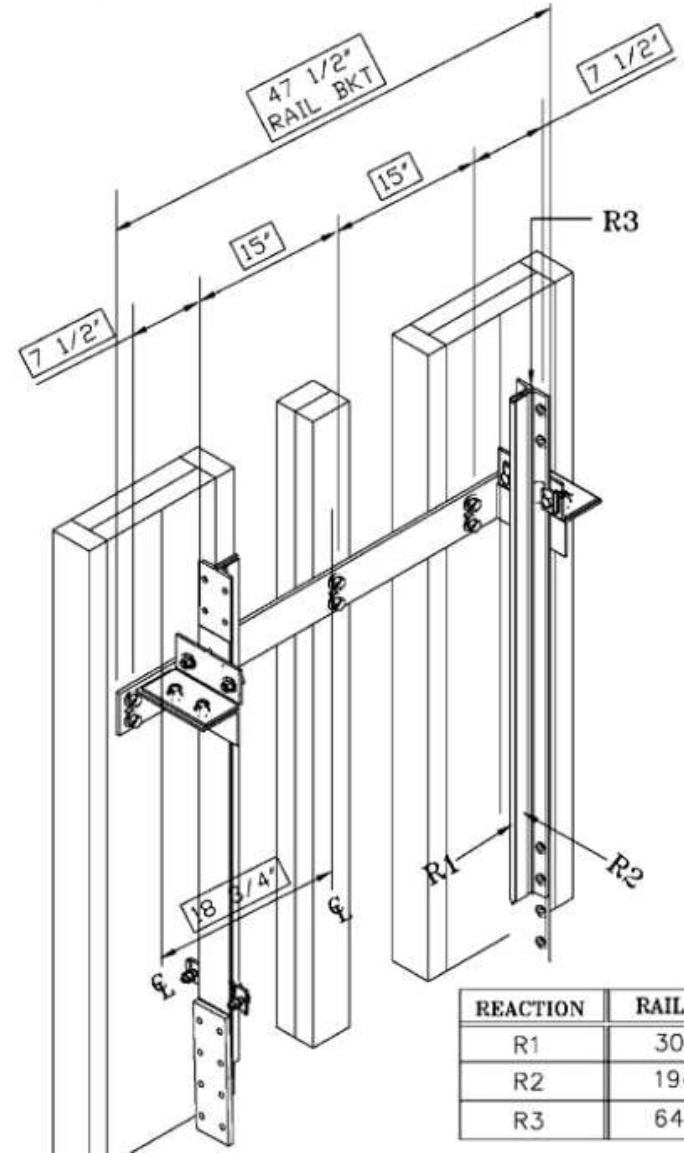

REACTION	RAIL FORCES
R1	304 LBS
R2	194 LBS
R3	6400 LBS

Wood Framed Elevator Rail Supports

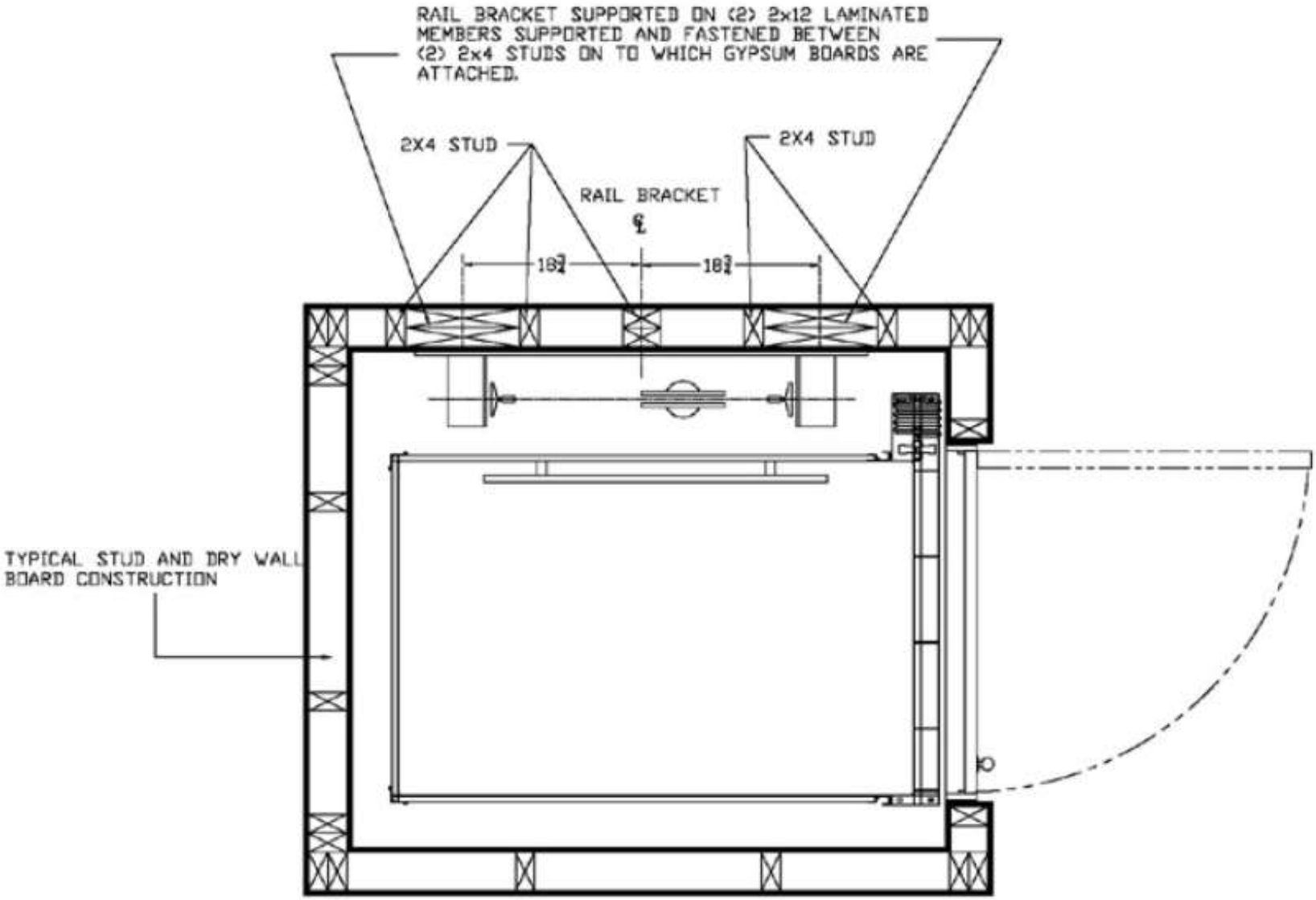

Wood Framed Elevator Rail Details

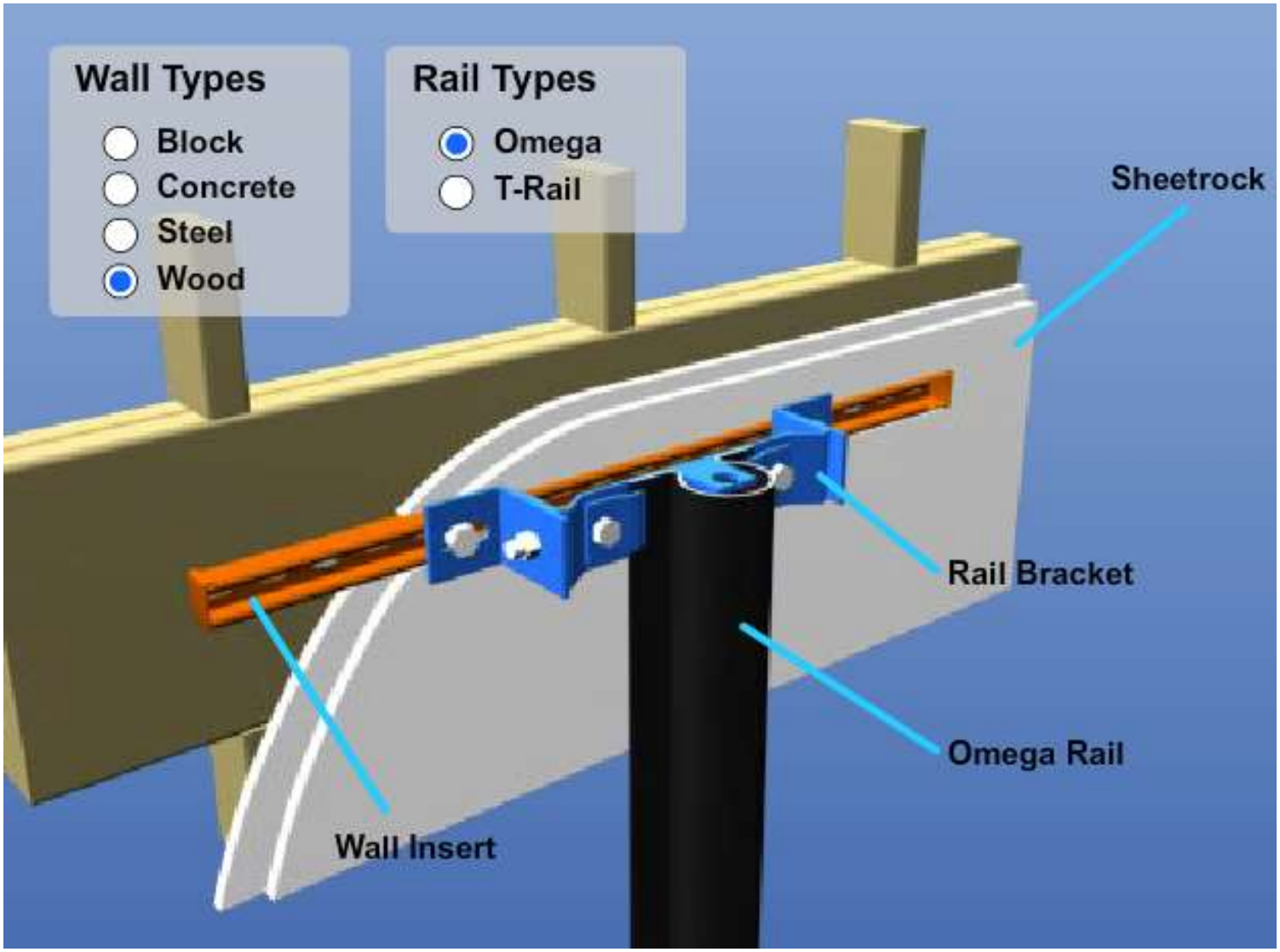

Elevator Shaft Wall

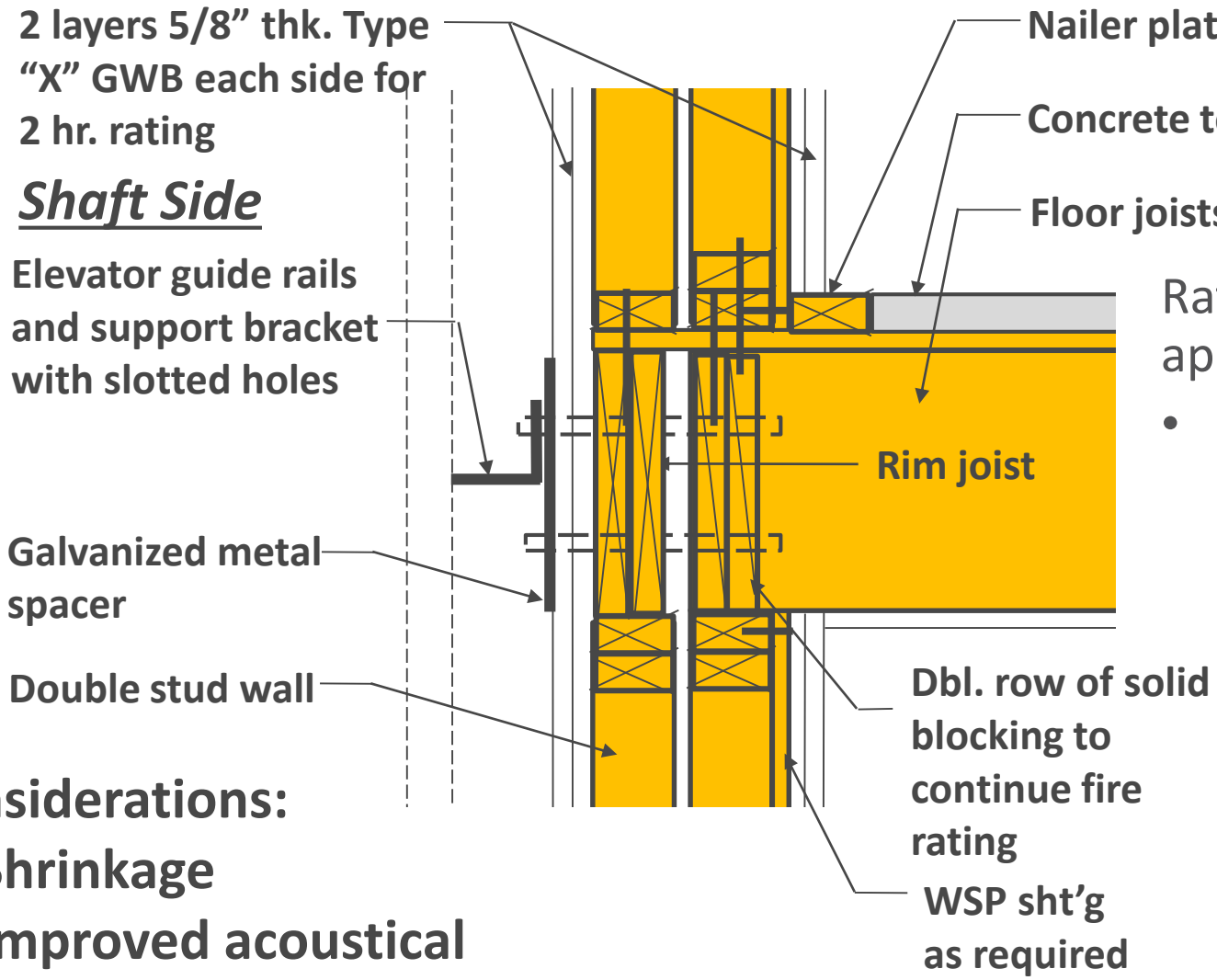

Floor Side

Rationale for detail approval:

- Membranes on both side of wall provide fire resistance via their approved assembly. 2 layers of 2x blocking in floor cavity continue protection

Considerations:

- **Shrinkage**
- **Improved acoustical performance with double wall**

Wood Design Focus: Volume 22, Issue 3 by Smith

Elevator Shaft Wall

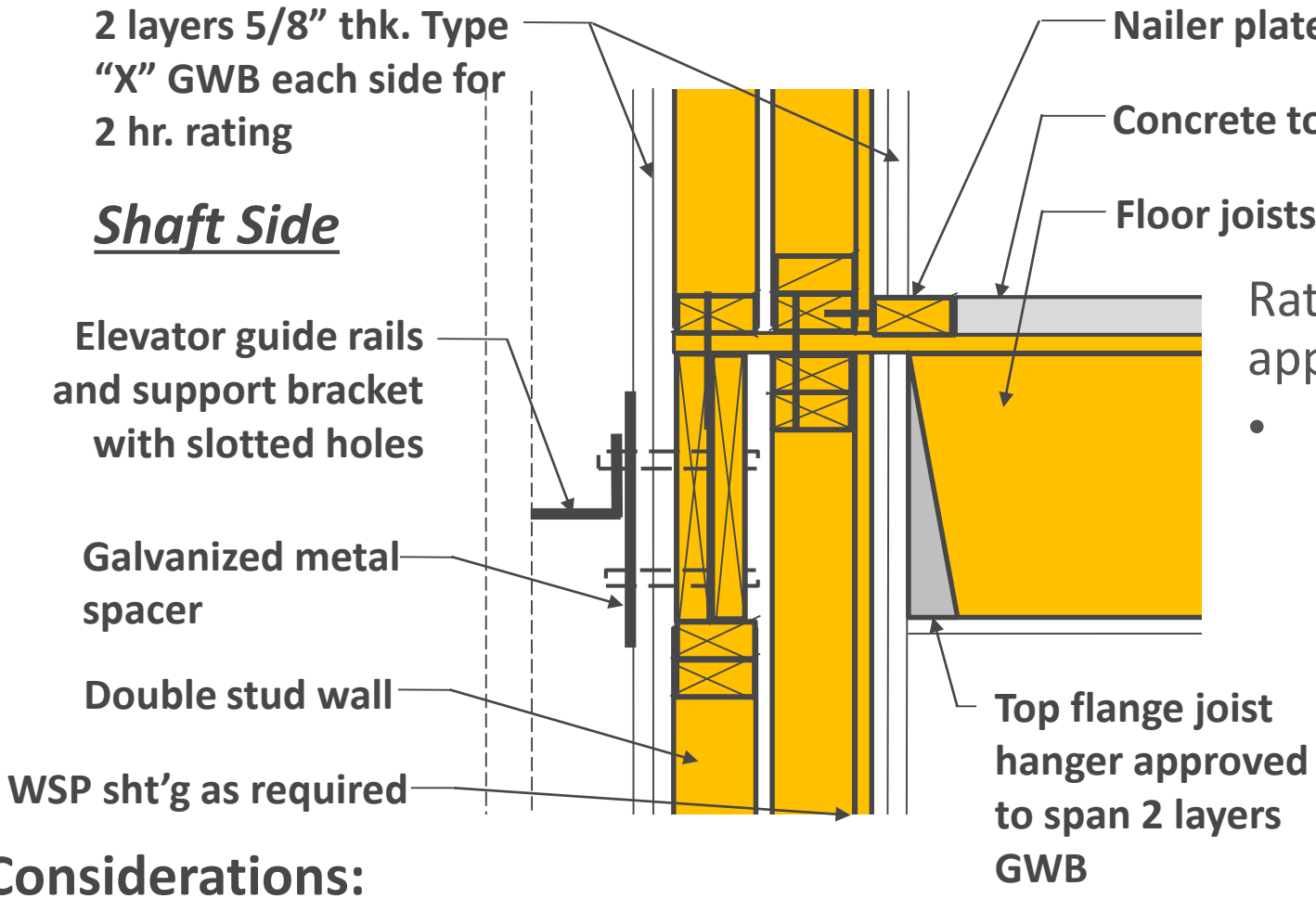

Floor Side

Rationale for detail approval:

- Membranes on both side of wall provide fire resistance via their approved assembly

Considerations:

- **Shrinkage in rim & floor joist/differential shrinkage**
- **Double wall provides improved acoustics**

Stair Shaft Walls

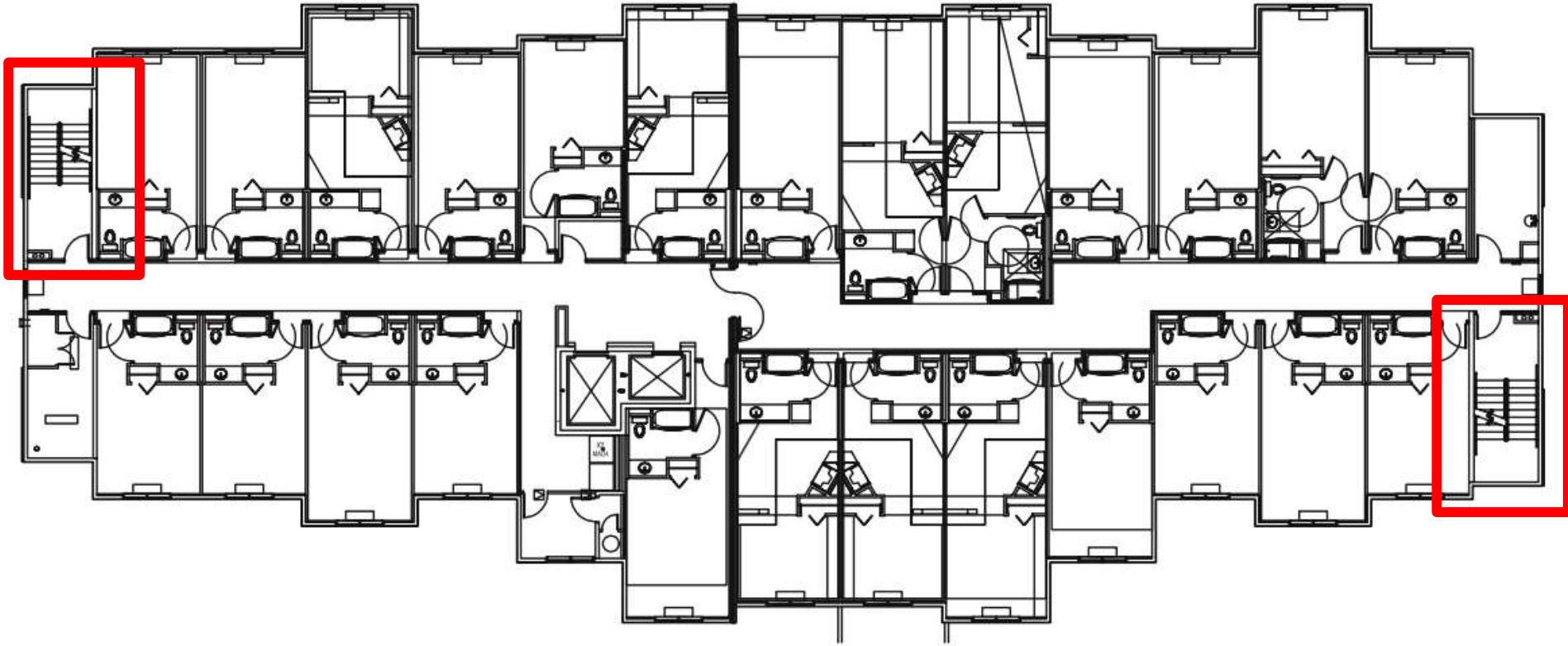

Stair Shaft Walls

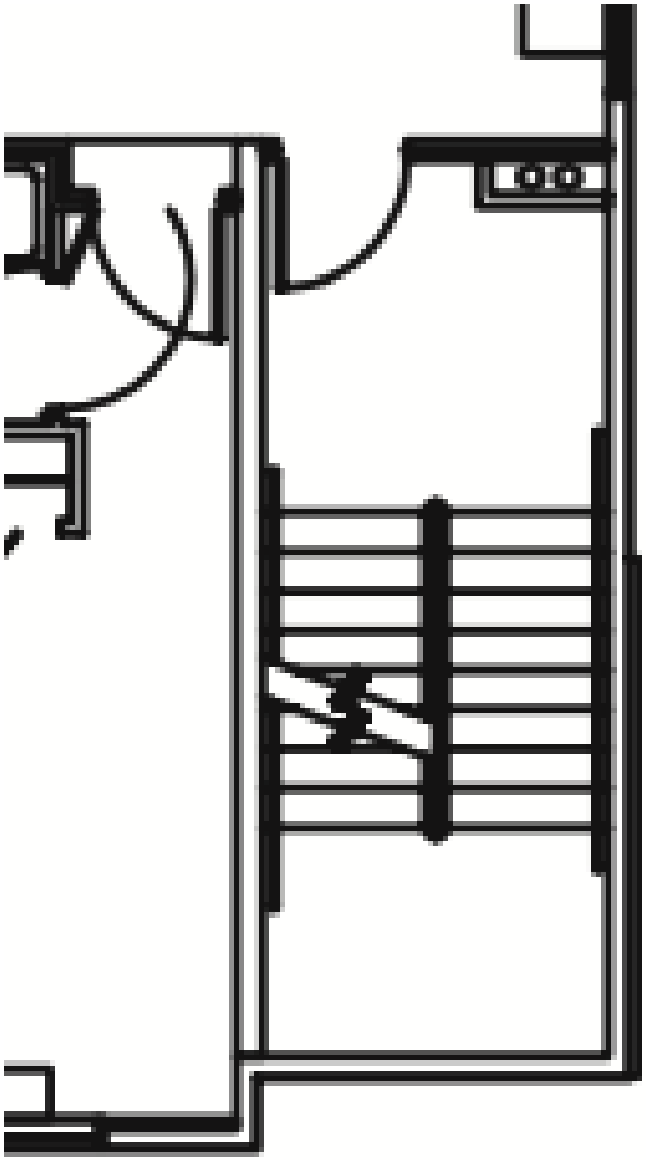

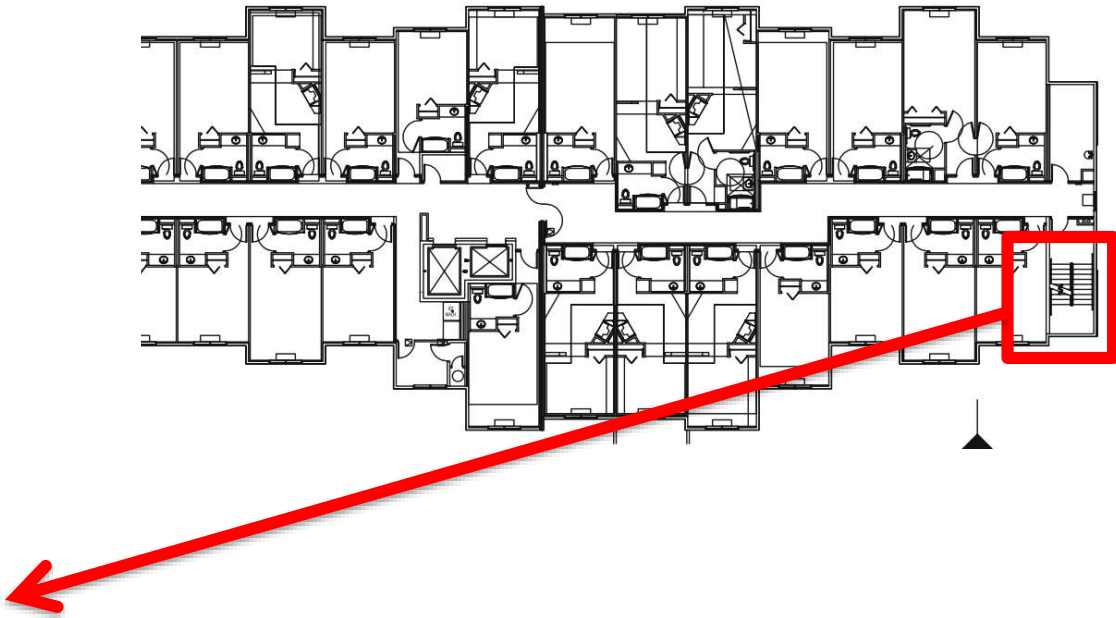

Stairway Shaft Enclosures & Framing

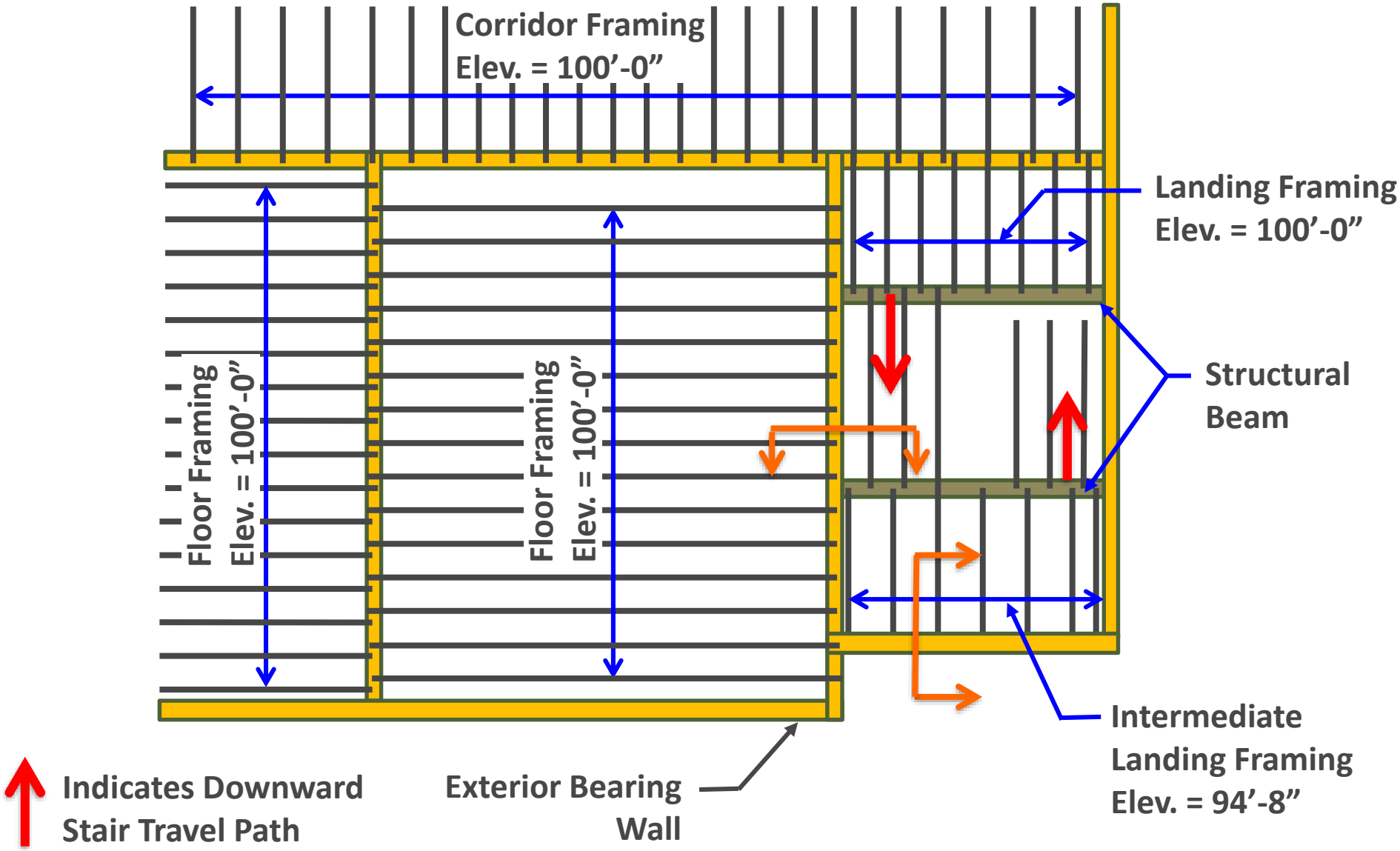

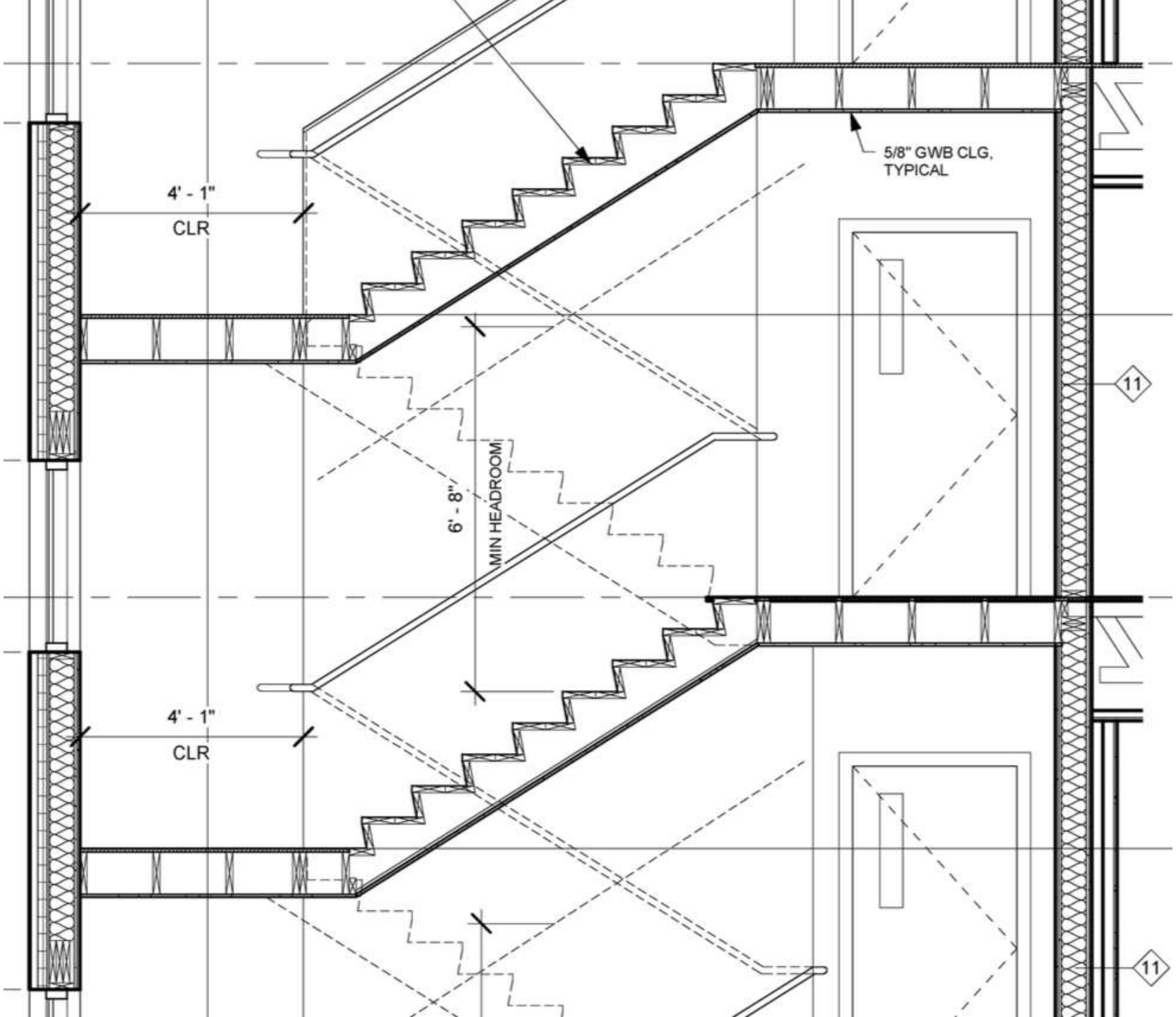
5/8" GWB CLG.
TYPICAL
4' - 1"
CLR
6' - 8"
MIN HEADROOM
11
4' - 1"
CLR
11

Wood Framed Stair Shaft Walls

Wood Framed Stair Shaft Walls

Stairway Shaft Enclosures & Framing

Stair & Floor Common Wall Detail

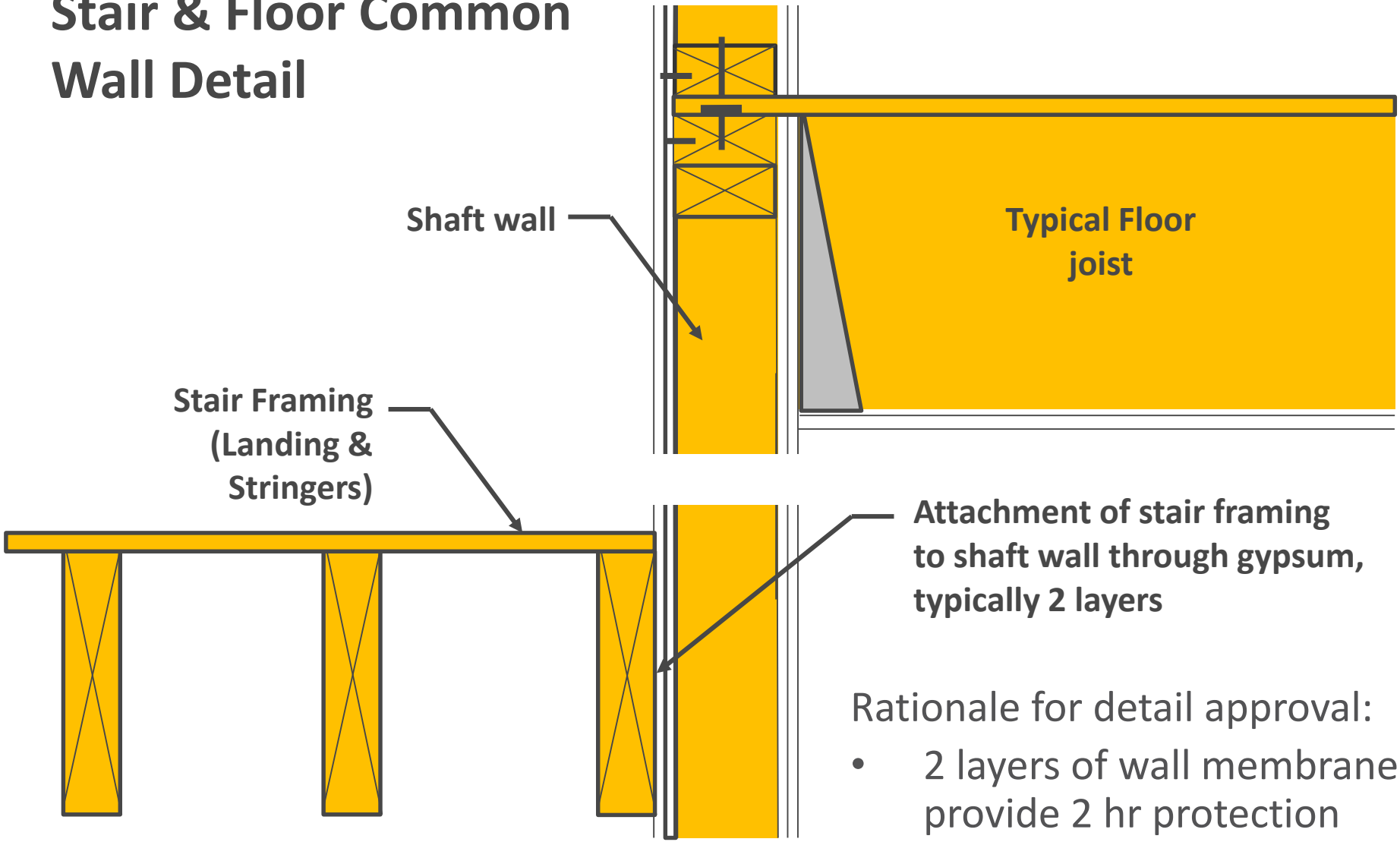

Rationale for detail approval:

- 2 layers of wall membrane provide 2 hr protection

Stairway Shaft Enclosures & Framing

Stair & Floor Common Wall Detail

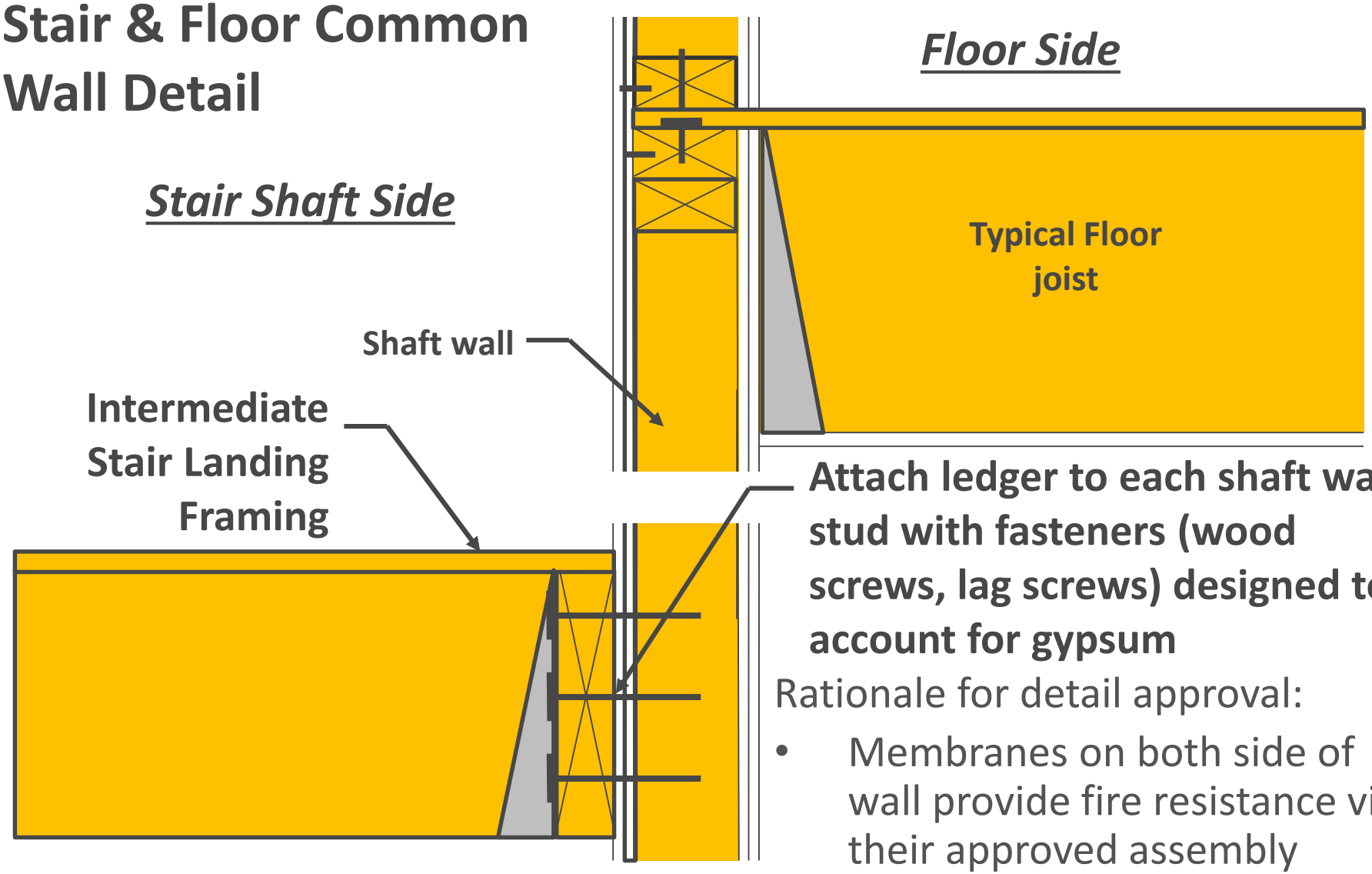

Attach ledger to each shaft wall stud with fasteners (wood screws, lag screws) designed to account for gypsum

Rationale for detail approval:

- Membranes on both side of wall provide fire resistance via their approved assembly

Stairway Shaft Enclosures & Framing

Stair Exterior Wall Detail

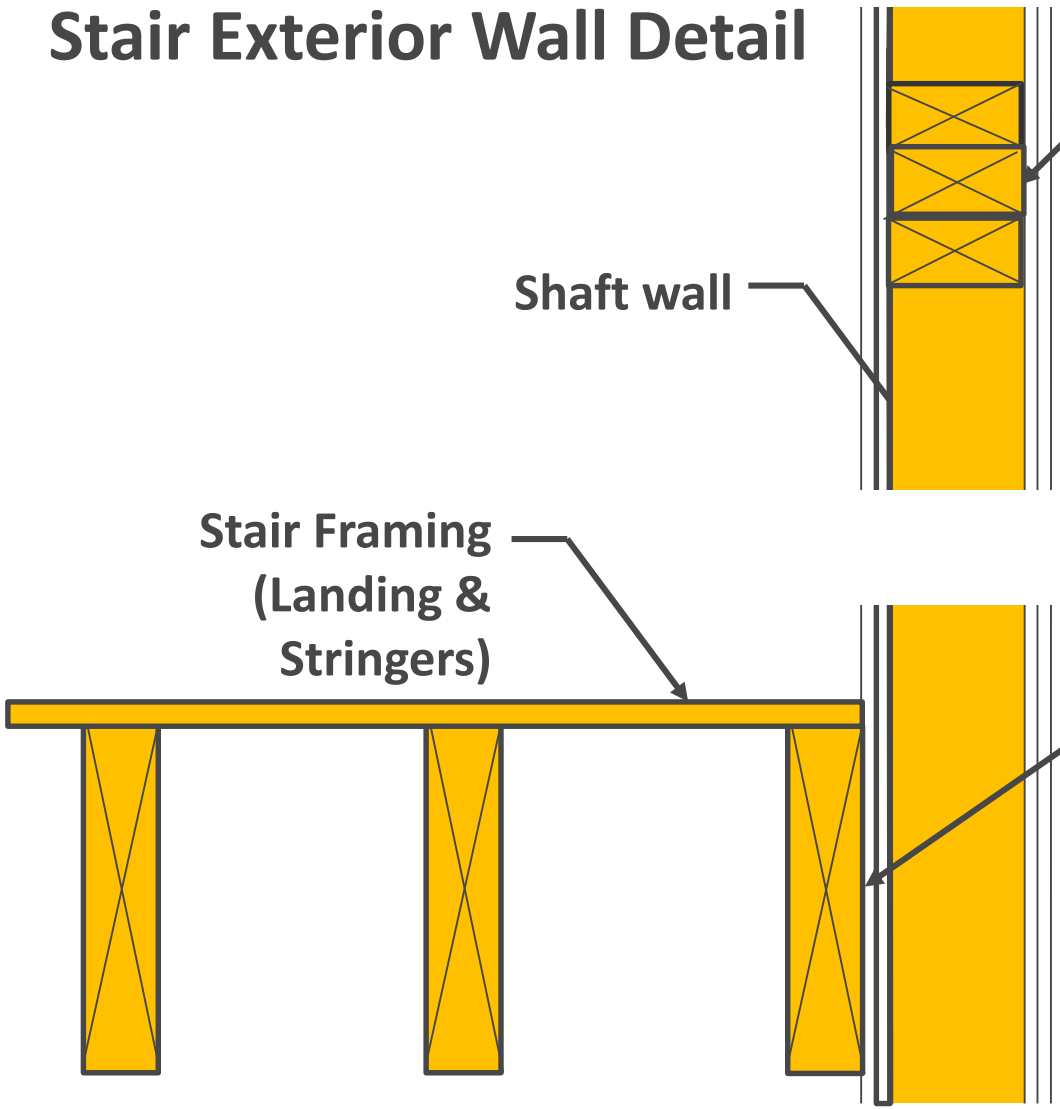

Consider "Hinge" at wall plates for out-of-plane wind & seismic loads due to lack of adjacent floor:

- **Span Plates Horizontally (no joints)**
- **Install additional member (rim) to span horizontally**

Attachment of stair framing to shaft wall through gypsum, typically 2 layers

Rationale for detail approval:

- 2 layers of wall membrane provide 2 hr protection

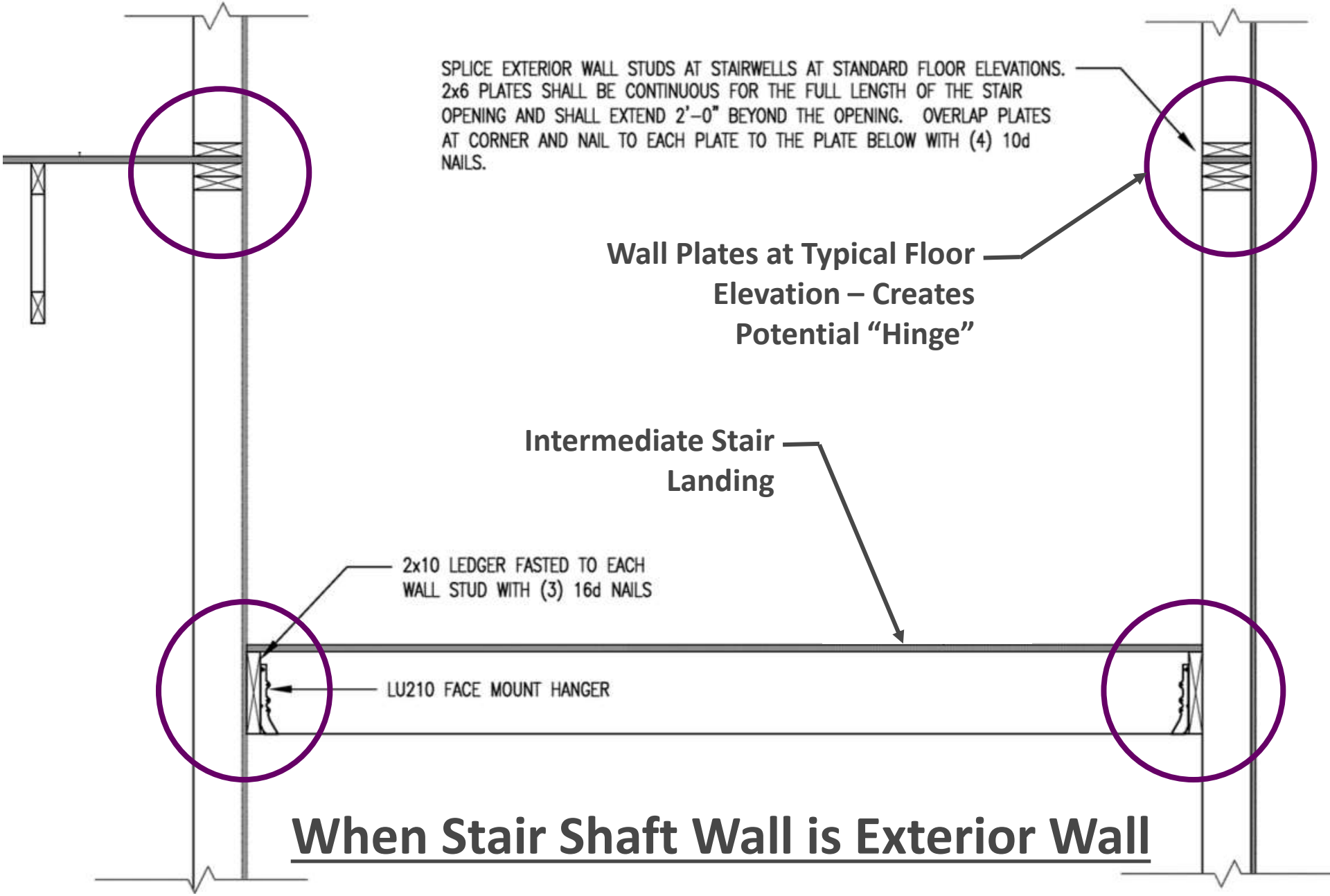

When Stair Shaft Wall is Exterior Wall

Stairway Shaft Enclosures & Framing

Stair Exterior Wall Detail

Stair Shaft Side

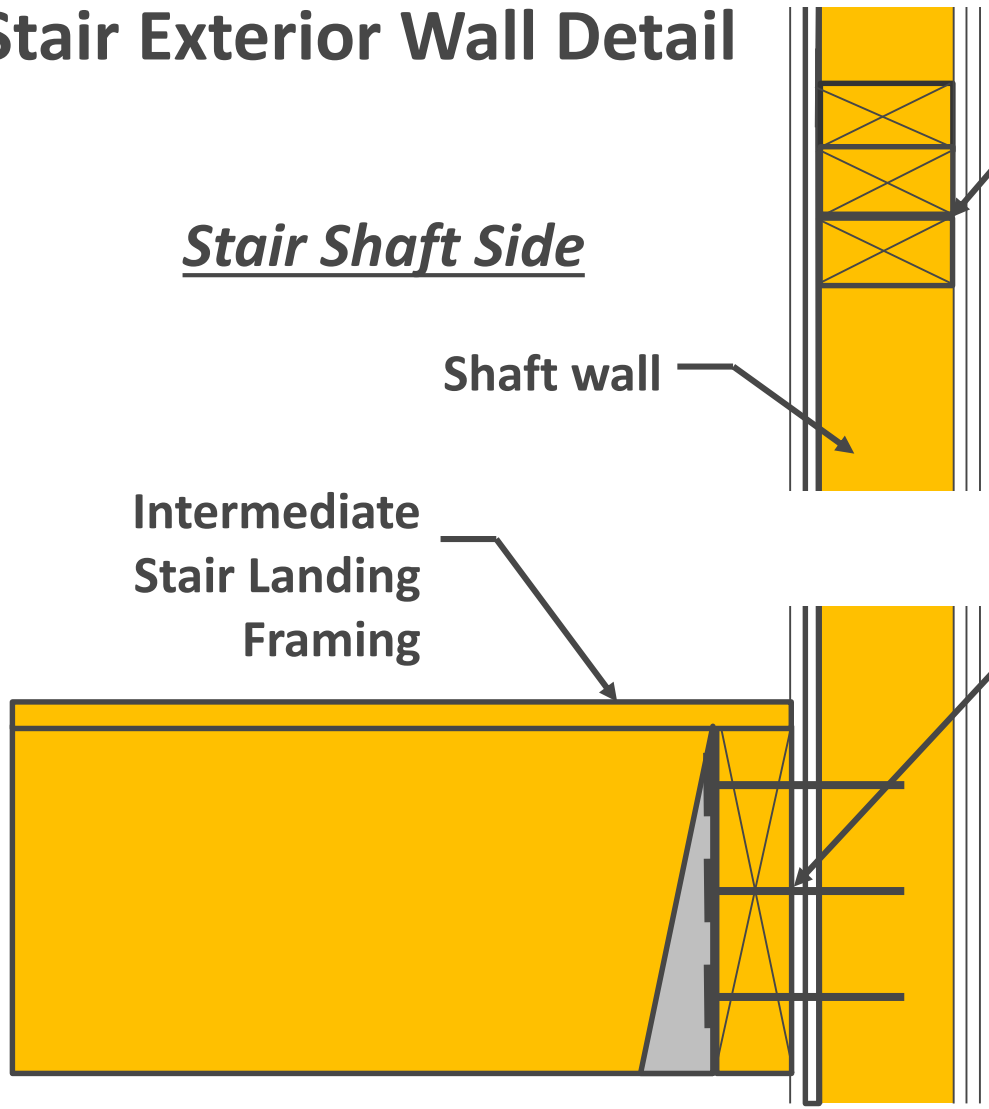

Exterior Side

Consider "Hinge" at wall plates for out-of-plane wind & seismic loads due to lack of adjacent floor:

- **Span plates horizontally**
- **Install additional member (rim) to span horizontally**

Attach ledger to each shaft wall stud with fasteners designed to account for gypsum

Rationale for detail approval:

- Membranes on both side of wall provide fire resistance via their approved assembly

Stairway Shaft Enclosures & Framing

Stairway Shaft Enclosures & Framing

Stairway Shaft Enclosures & Framing

Stair Exterior Wall Detail

Stair Shaft Side

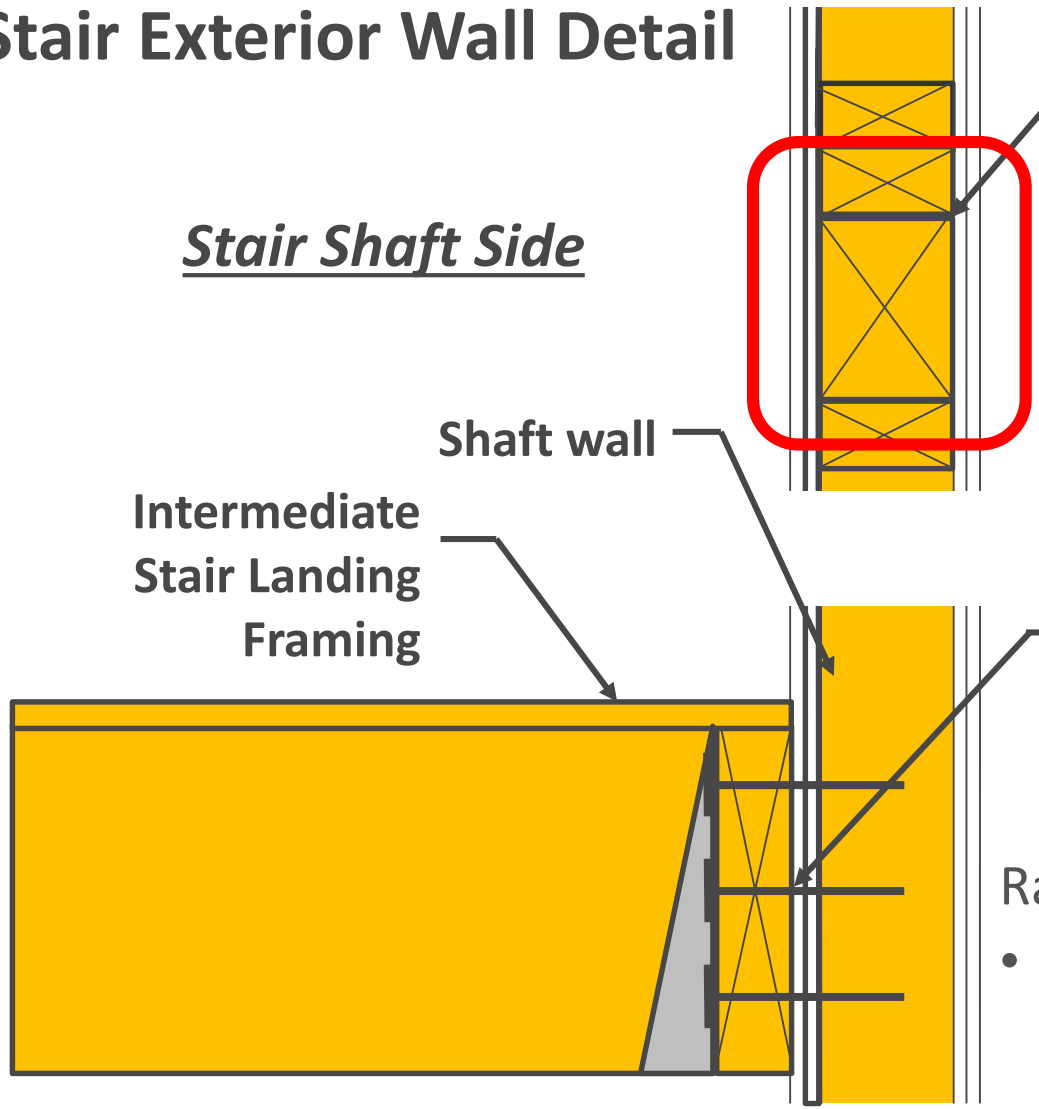

Exterior Side

Consider "Hinge" at wall plates for out-of-plane wind & seismic loads due to lack of adjacent floor:

- **Install additional member (rim) to span horizontally**

Attach ledger to each shaft wall stud with fasteners designed to account for gypsum

Rationale for detail approval:

- Membranes on both side of wall provide fire resistance via their approved assembly

See www.gp.c

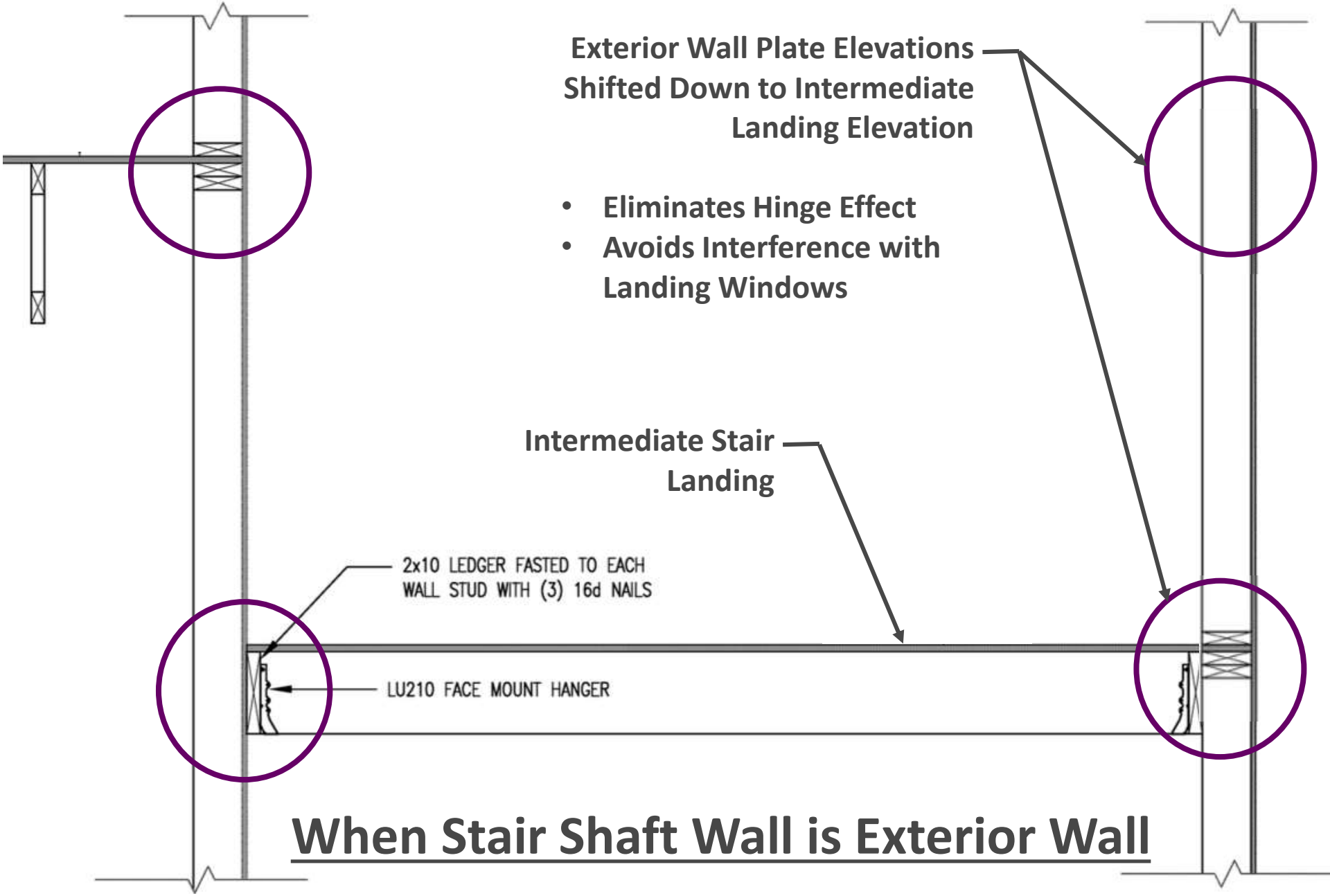

When Stair Shaft Wall is Exterior Wall

Stairway Shaft Enclosures & Framing

Stair Exterior Wall Detail

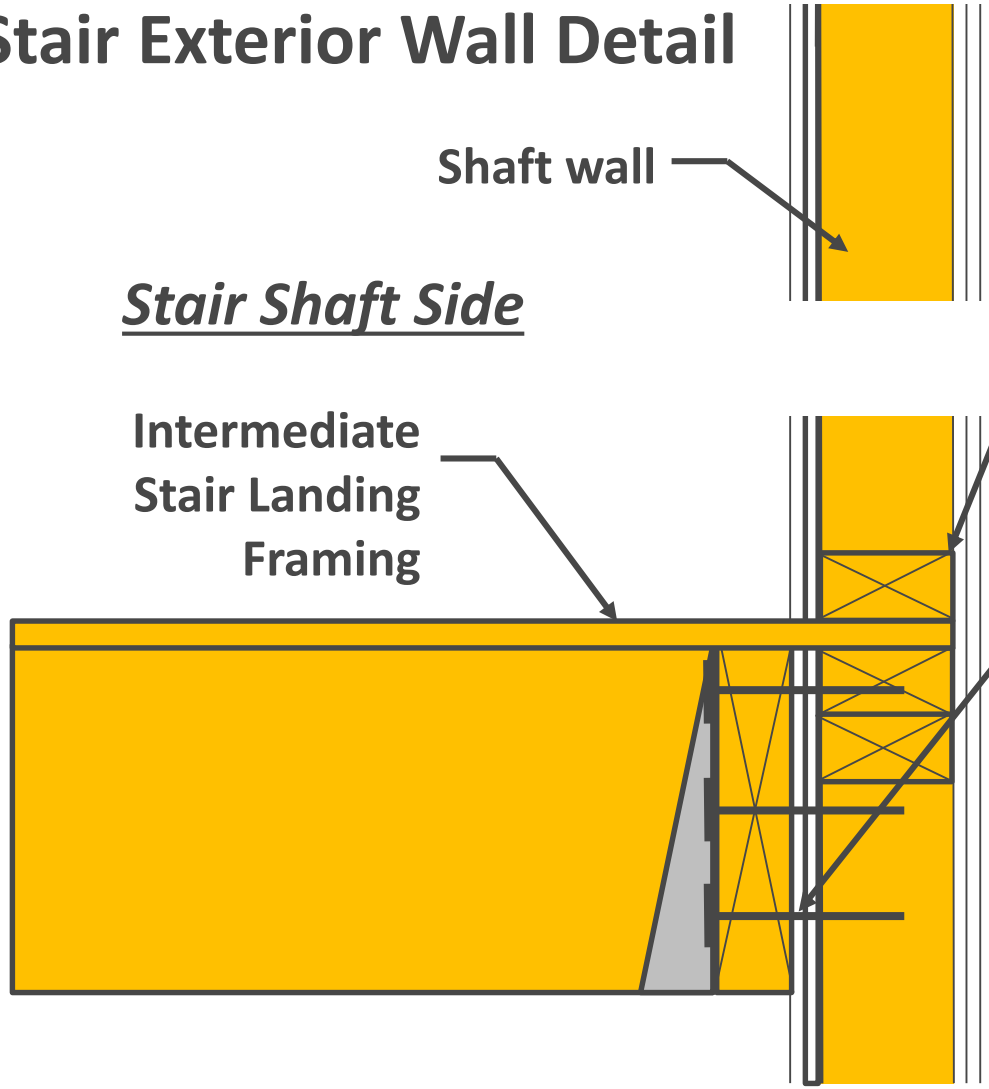

Exterior Side

Wall plate elevations shifted to intermediate landing elevation at stair shafts

Attach ledger to each shaft wall stud with fasteners (wood screws, lag screws) designed to account for gypsum

Rationale for detail approval:

- Membranes on both side of wall provide fire resistance via their approved assembly

Stairway Shaft Enclosures & Framing

Stair Exterior Wall Detail

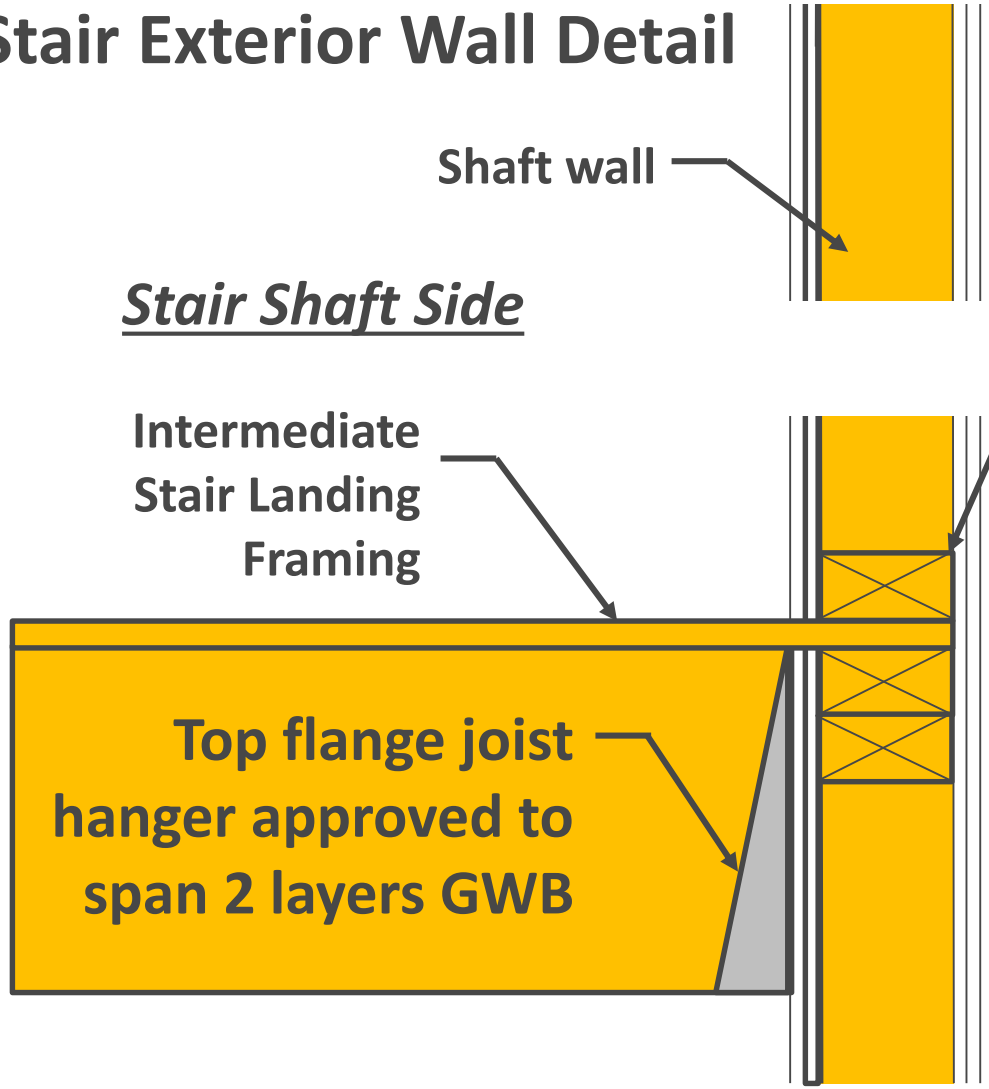

Exterior Side

Wall plate elevations shifted to intermediate landing elevation at stair shafts

Rationale for detail approval:

- Membranes on both side of wall provide fire resistance via their approved assembly

Stairway Shaft Enclosures & Framing

Stair Wall Detail

Stair Shaft Side

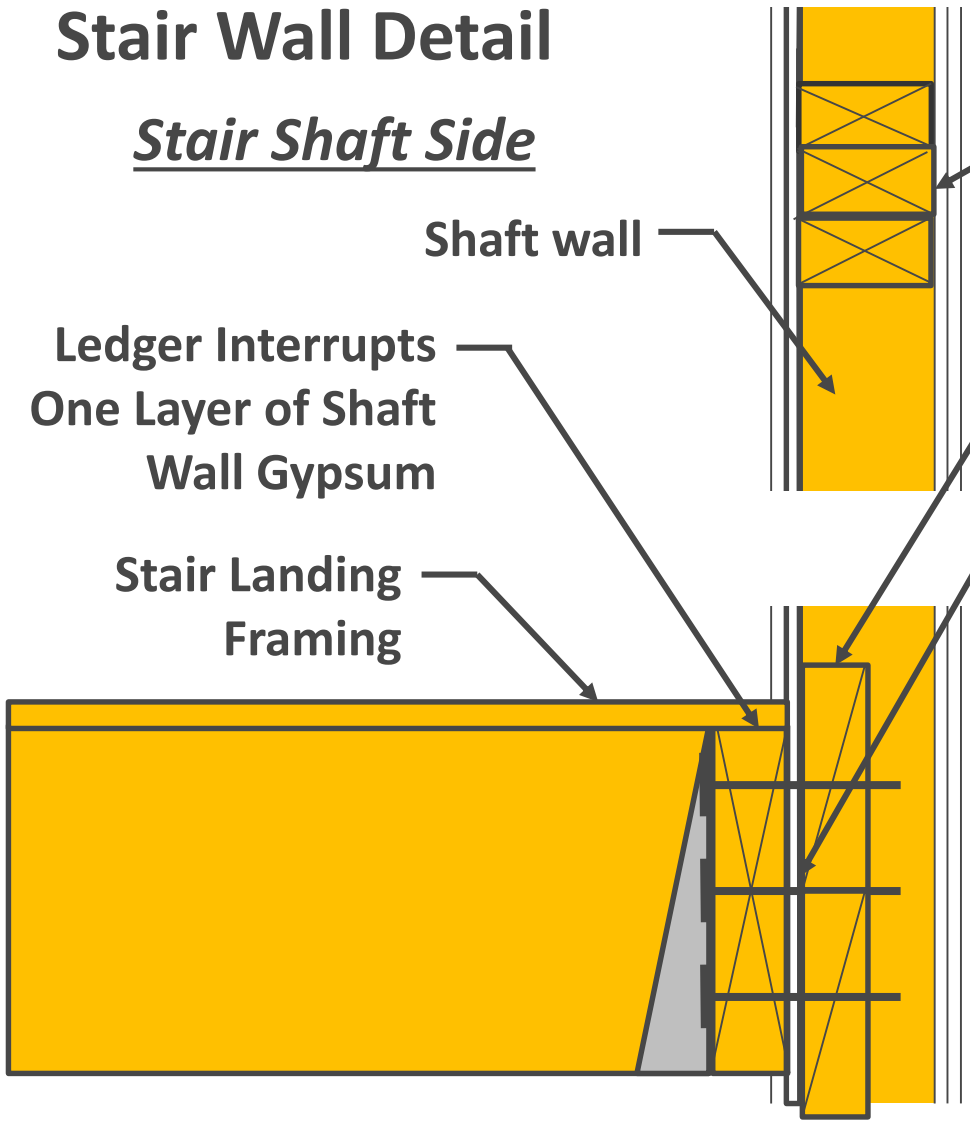

Exterior Side

Wall plates at typical floor elevation

Blocking in shaft wall between studs

Attach ledger to studs with fasteners (wood screws, lag screws) designed to account for 1 layer of gypsum

Rationale for detail approval:

- Membranes on both side of wall provide fire resistance via their approved assembly; at floor cavity, blocking in wall provides 2nd hr

Stairway Shaft Enclosures & Framing

Stair Wall Detail

Stair Shaft Side

Exterior Side

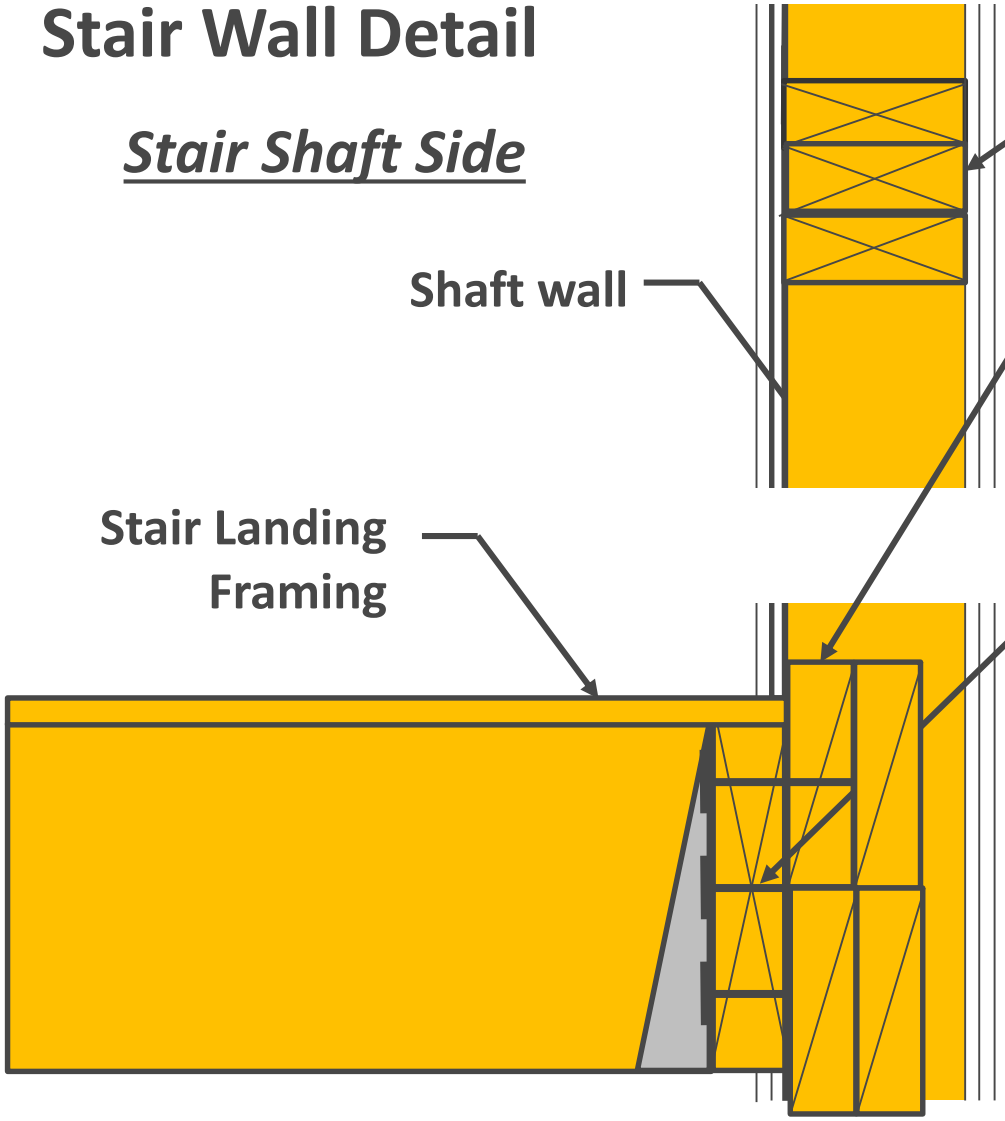

Wall plates at typical floor elevation

2 layers of blocking in shaft wall between studs to provide 2 hours protection & ledger fastener attachment

Attach ledger to blocking with fasteners (wood screws, lag screws)

Rationale for detail approval:

- Membranes on both side of wall provide fire resistance via their approved assembly; at floor cavity 2 layers of blocking in wall provide 2 hr protection

Stairway Shaft Enclosures & Framing

Stair Exterior Wall Detail

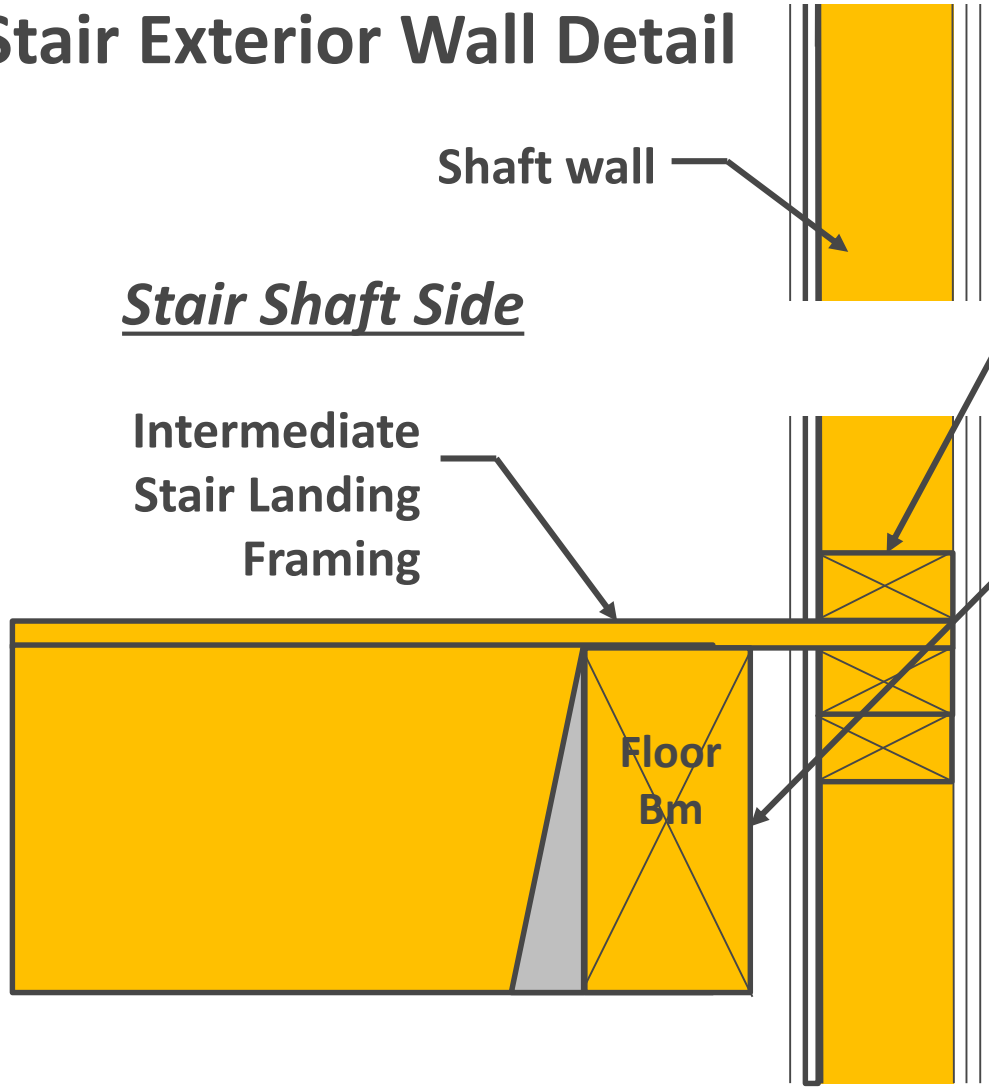

Exterior Side

Wall plate elevations shifted to intermediate landing elevation at stair shafts

Install spanning beam just inboard of shaftwall - only penetrate wall at end of beam locations – requires intermediate height posts

Rationale for detail approval:

- Membranes on both side of wall provide fire resistance via their approved assembly

Stairway Shaft Enclosures & Framing

Stair Exterior Wall Detail

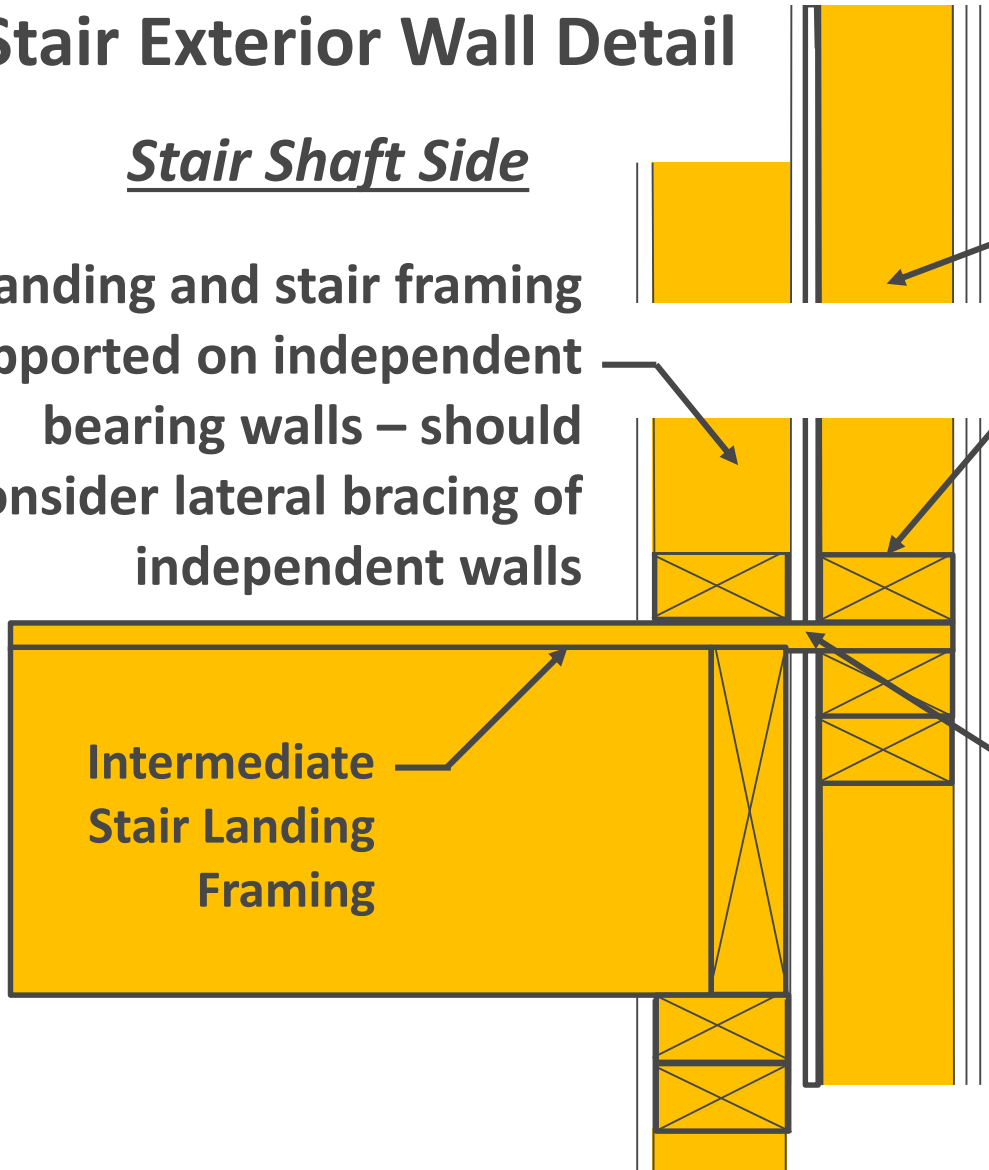

Rationale for detail approval:

- Membranes on both side of wall provide fire resistance via their approved assembly

Stairway Shaft Enclosures & Framing

Stair Wall Detail

Stair Shaft Side

Exterior Side

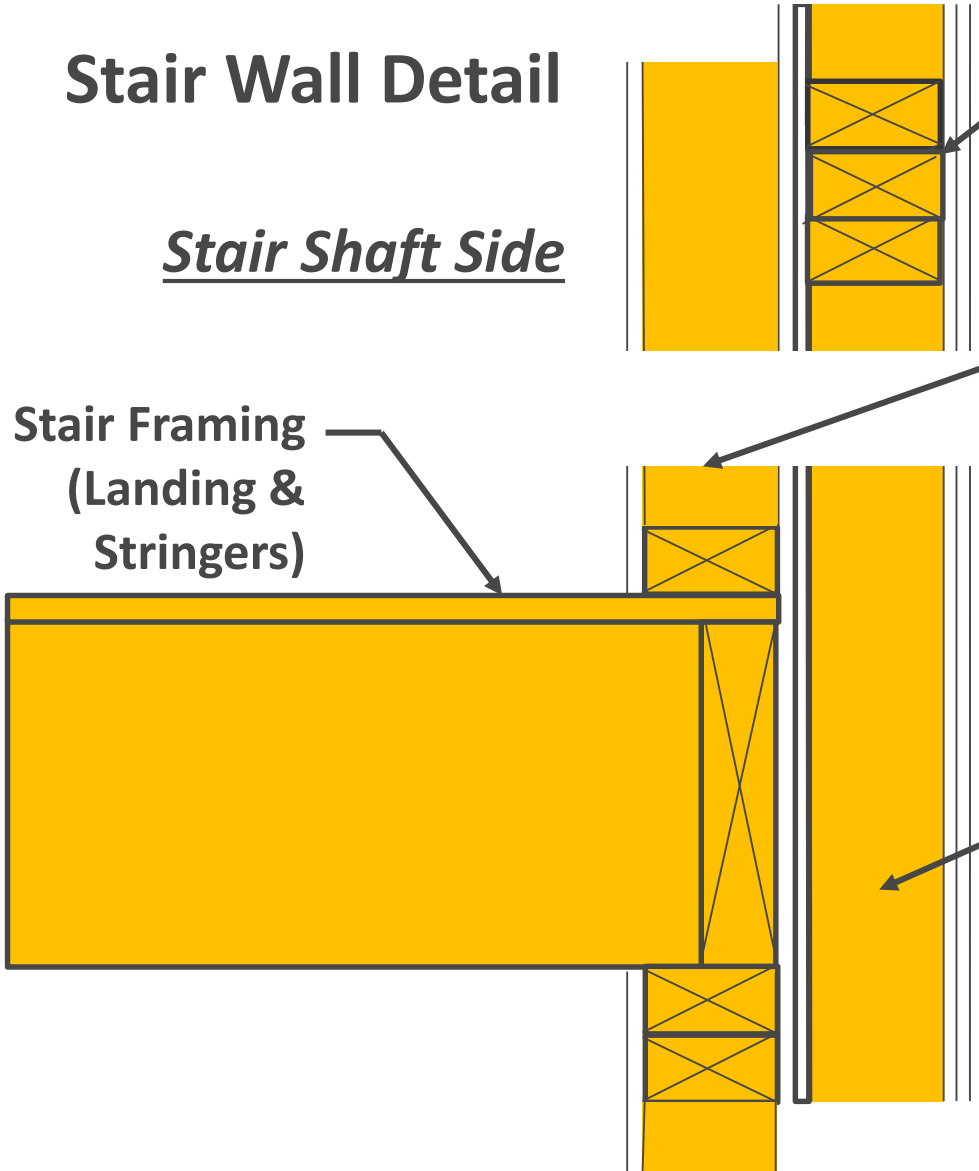

Rationale for detail approval:

- Membranes on both side of wall provide fire resistance via their approved assembly

Stairway Shaft Enclosures & Framing

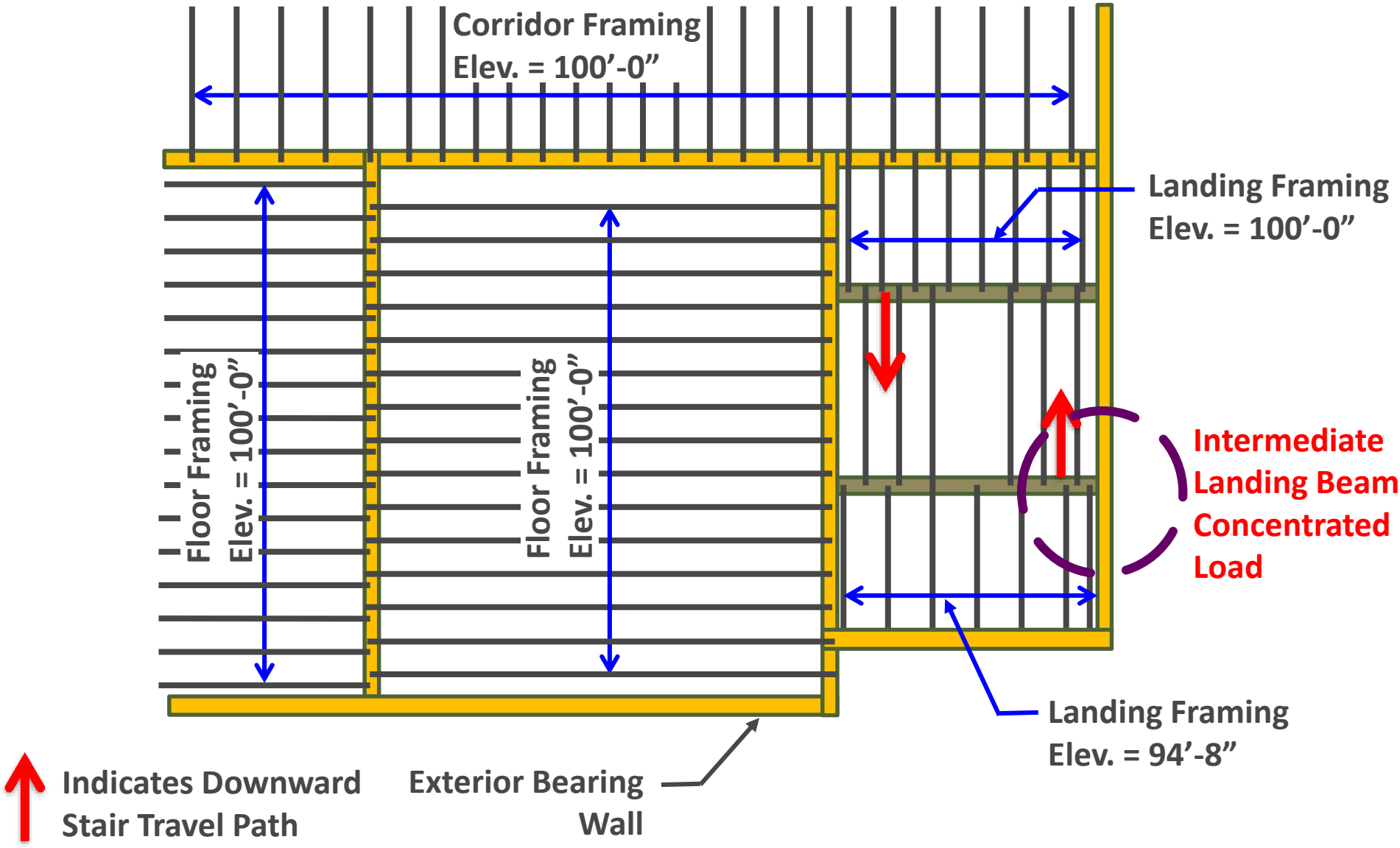

Stairway Shaft Enclosures & Framing

Stair Exterior Wall Detail

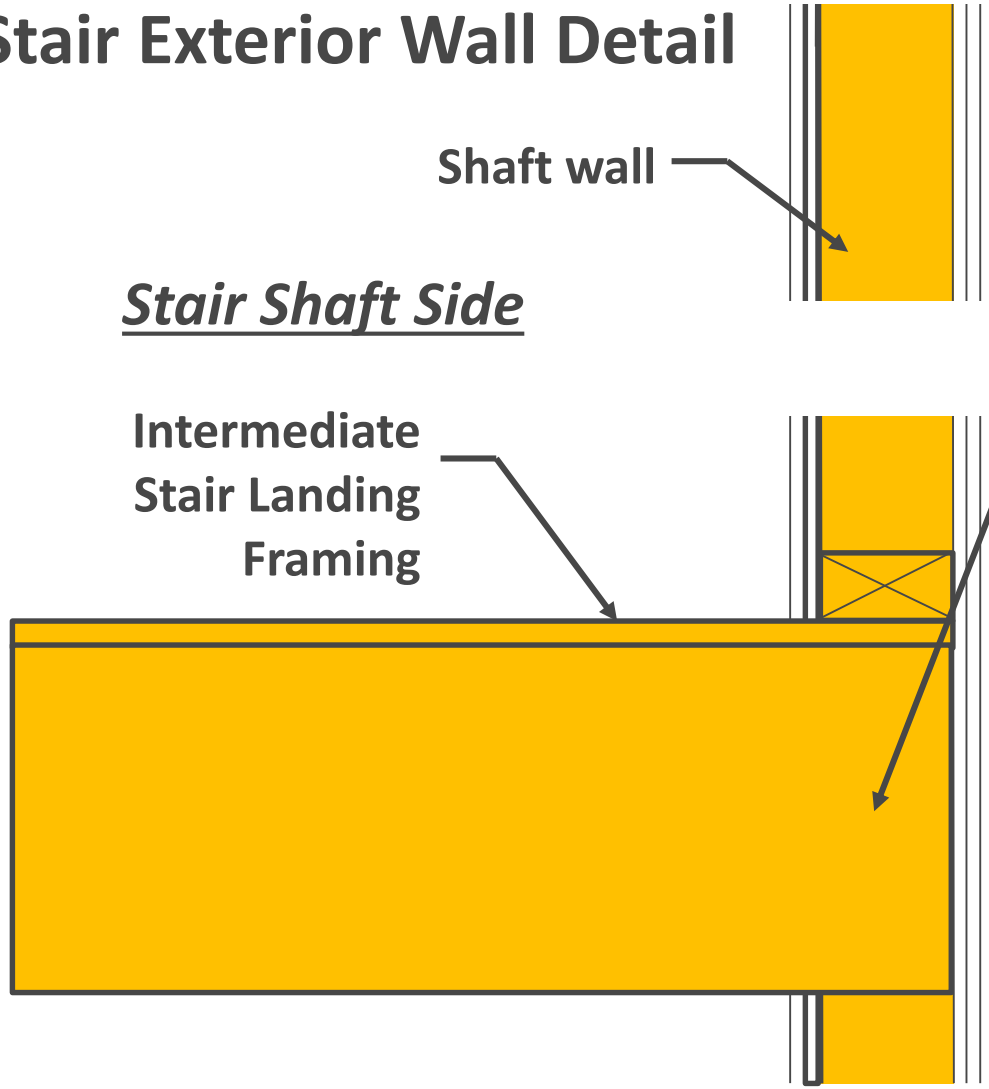

Exterior Side

Intermediate Landing Beam Extends into Shaft Wall – Oversize to Provide 2 Hour Fire Protection Using Calculated Char Rates

Rationale for detail approval:

- Membranes on both side of wall provide fire resistance via their approved assembly; at floor cavity beam oversized to provide 2 hour char protection

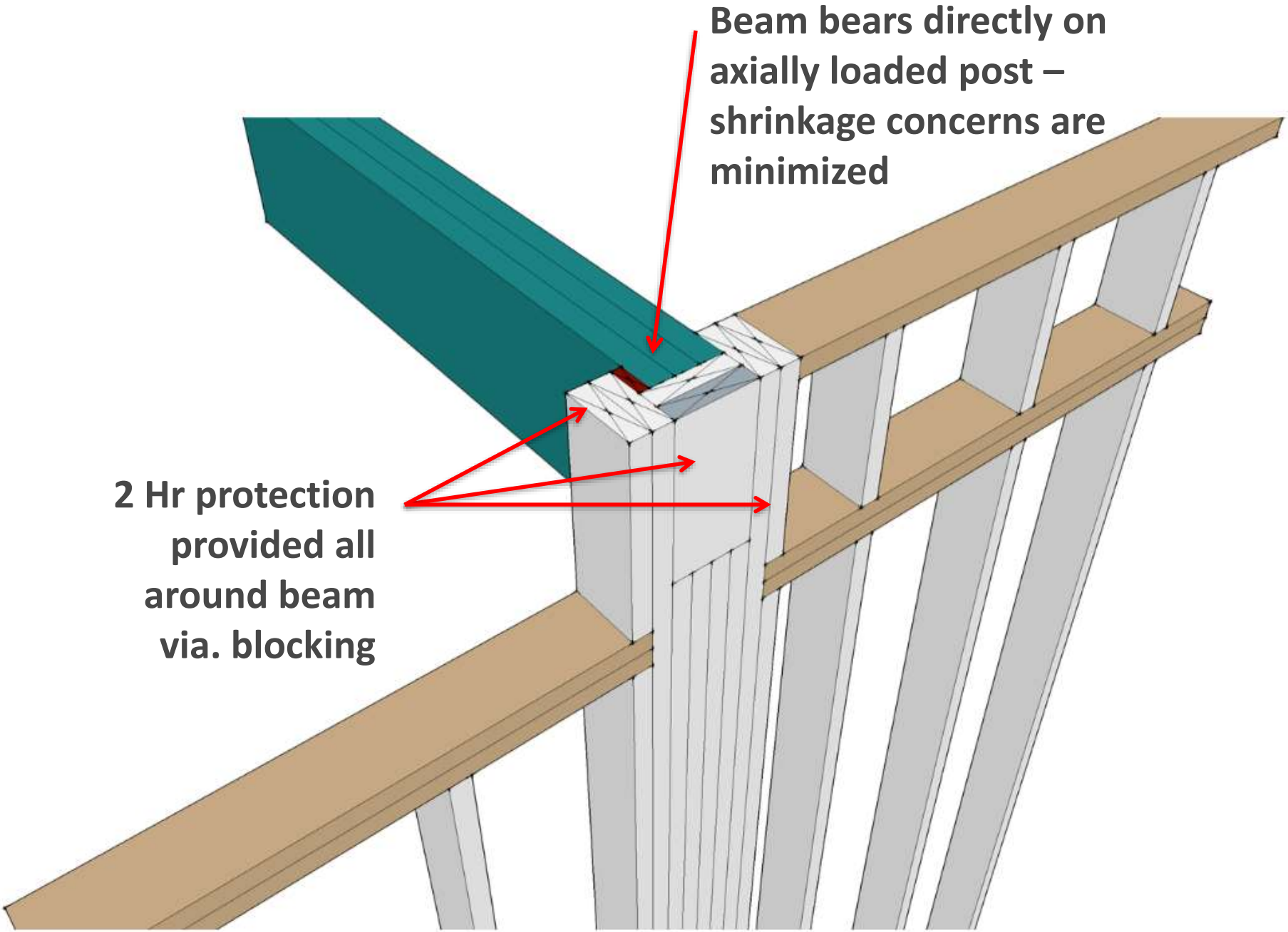
Beam bears directly on axially loaded post – shrinkage concerns are minimized
2 Hr protection provided all around beam via. blocking

Outline

- Mid-Rise Construction Types & Life Safety Review
- Structural Design & Detailing Considerations
- Shrinkage Considerations & Detailing
- Acoustic Requirements & Detailing
- Fire Resistive Requirements and Detailing
    - Exterior Walls
    - Floor to Wall Detailing
    - Interior Walls
    - Shaft Walls
    - Corridors & Balconies

Corridors – Fire Resistance Ratings

Check requirements of IBC Tables 601 and 1018.1 for Corridor Wall and Floor/Ceiling Fire-Resistance Ratings

TABLE 1018.1 CORRIDOR FIRE-RESISTANCE RATING

OCCUPANCY	OCCUPANT LOAD SERVED BY CORRIDOR	REQUIRED FIRE-RESISTANCE RATING (hours)	
		Without sprinkler system	With sprinkler system[c]
H-1, H-2, H-3	All	Not Permitted	1
H-4, H-5	Greater than 30	Not Permitted	1
A, B, E, F, M, S, U	Greater than 30	1	0
R	Greater than 10	Not Permitted	0.5
I-2[a], I-4	All	Not Permitted	0
I-1, I-3	All	Not Permitted	1[b]

TABLE 601 FIRE-RESISTANCE RATING REQUIREMENTS FOR BUILDING ELEMENTS (HOURS)

BUILDING ELEMENT	TYPE I		TYPE II		TYPE III		TYPE IV	TYPE V	
	A	B	A[d]	B	A[d]	B	HT	A[d]	B
Primary structural frame[g] (see Section 202)	3[a]	2[a]	1	0	1	0	HT	1	0
Bearing walls									
Exterior[f, g]	3	2	1	0	2	2	2	1	0
Interior	3[a]	2[a]	1	0	1	0	1/HT	1	0
Nonbearing walls and partitions Exterior	See Table 602								
Nonbearing walls and partitions Interior[e]	0	0	0	0	0	0	See Section 602.4.6	0	0
Floor construction and associated secondary member (see Section 202)	2	2	1	0	1	0	HT	1	0

Corridors – Fire Resistance Ratings

Corridor Walls

IBC 1018.1: Corridor walls required to be fire-resistance rated shall comply with Section 708 for fire partitions.

708.3 Fire-resistance rating.

Fire partitions shall have a fire-resistance rating of not less than 1 hour.

Exception: Corridor walls permitted to have a $^{1}/_{2}$ hour fire-resistance rating by Table 1018.1 (applies to R occupancies with sprinkler systems)

Corridor Walls

708.4 Continuity.

Fire partitions shall extend from the top of the foundation or floor/ceiling assembly below to the underside of the floor or roof sheathing, slab or deck above or to the fire-resistance-rated floor/ceiling or roof/ceiling assembly above, and shall be securely attached thereto.

Exceptions:

2. Where the room-side fire-resistance-rated membrane of the *corridor* is carried through to the underside of the floor or roof sheathing, deck or slab of a fire-resistance-rated floor or roof above, the ceiling of the *corridor* shall be permitted to be protected by the use of ceiling materials as required for a 1-hour fire-resistance-rated floor or roof system.

3. Where the *corridor* ceiling is constructed as required for the *corridor* walls, the walls shall be permitted to terminate at the upper membrane of such ceiling assembly.

Corridor Walls – 708.4 Exception 2

Figure 708.4(2)(B)
FIRE PARTITION CONTINUITY

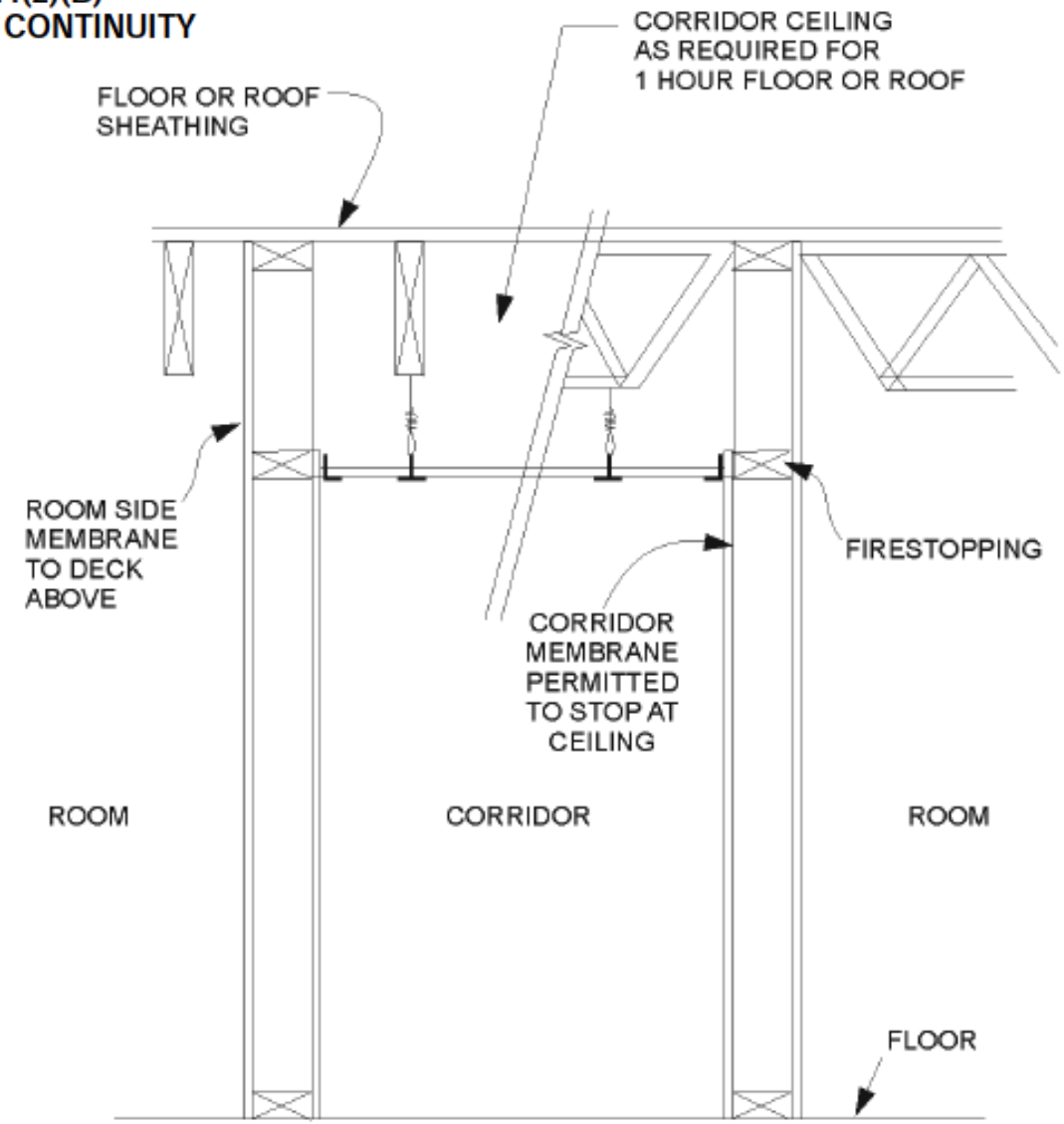

Corridor Walls – 708.4 Exception 3

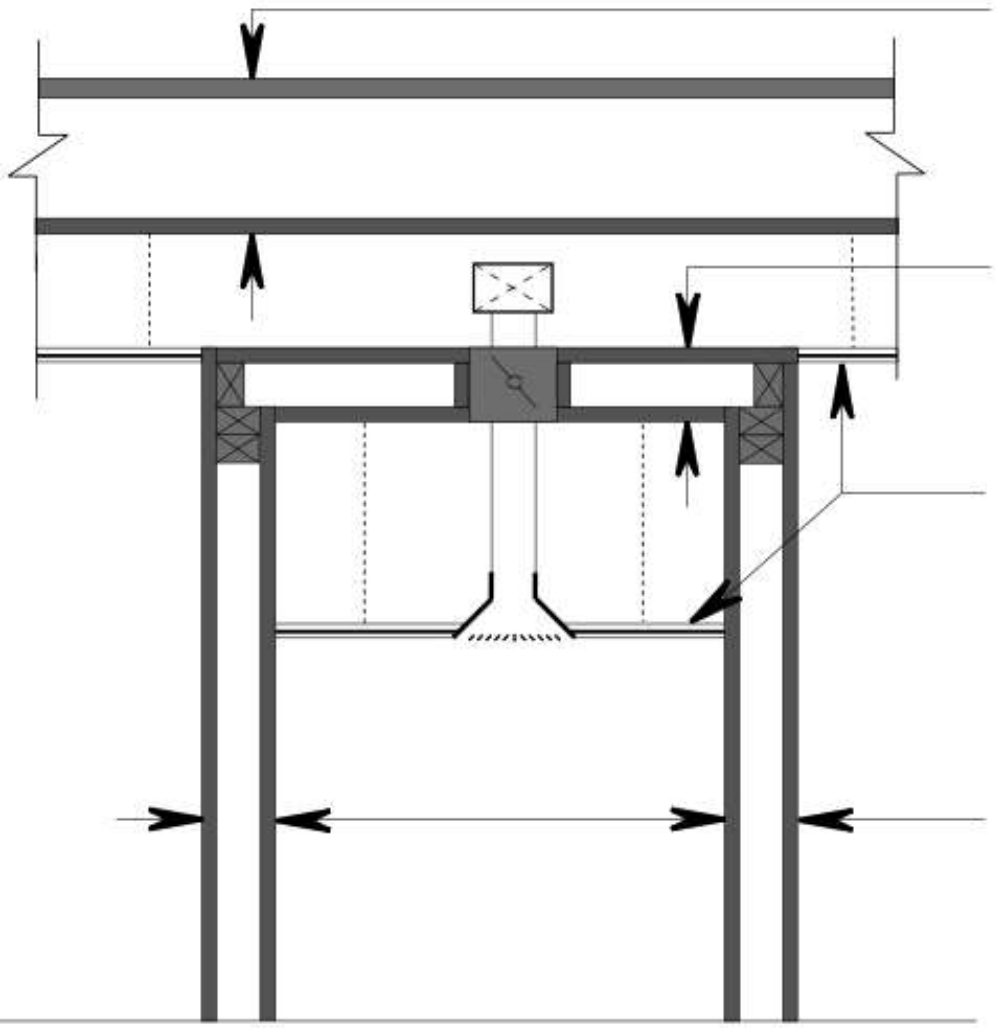

Floor or roof sheathing, framing and ceiling membrane as required for a one-hour fire-resistive floor or roof system throughout entire story.

Corridor ceiling constructed the same as corridor walls.

Optional nonrated suspended ceiling.

Corridor wall framing and membrane each side as required for one-hour fire-resistive wall construction.

Corridors - 1hr Floor

UL L502
GA FC5104

1 HOUR FIRE

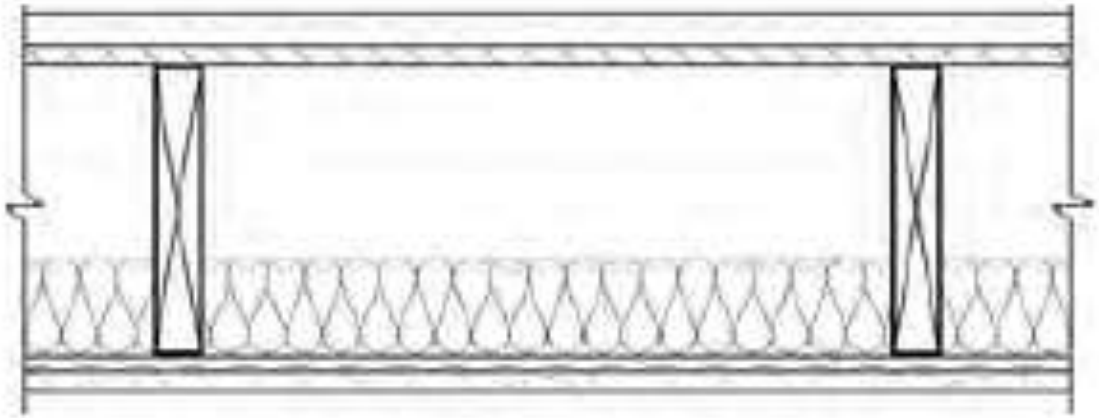

- 1” gypsum underlayment
- 19/32” WSP
- 3 ½” Fiberglass Batt
- 2x10 joists @24 “ oc
- Resilient channel
- 5/8” Type-X Gyp

Corridors - 1hr Floor

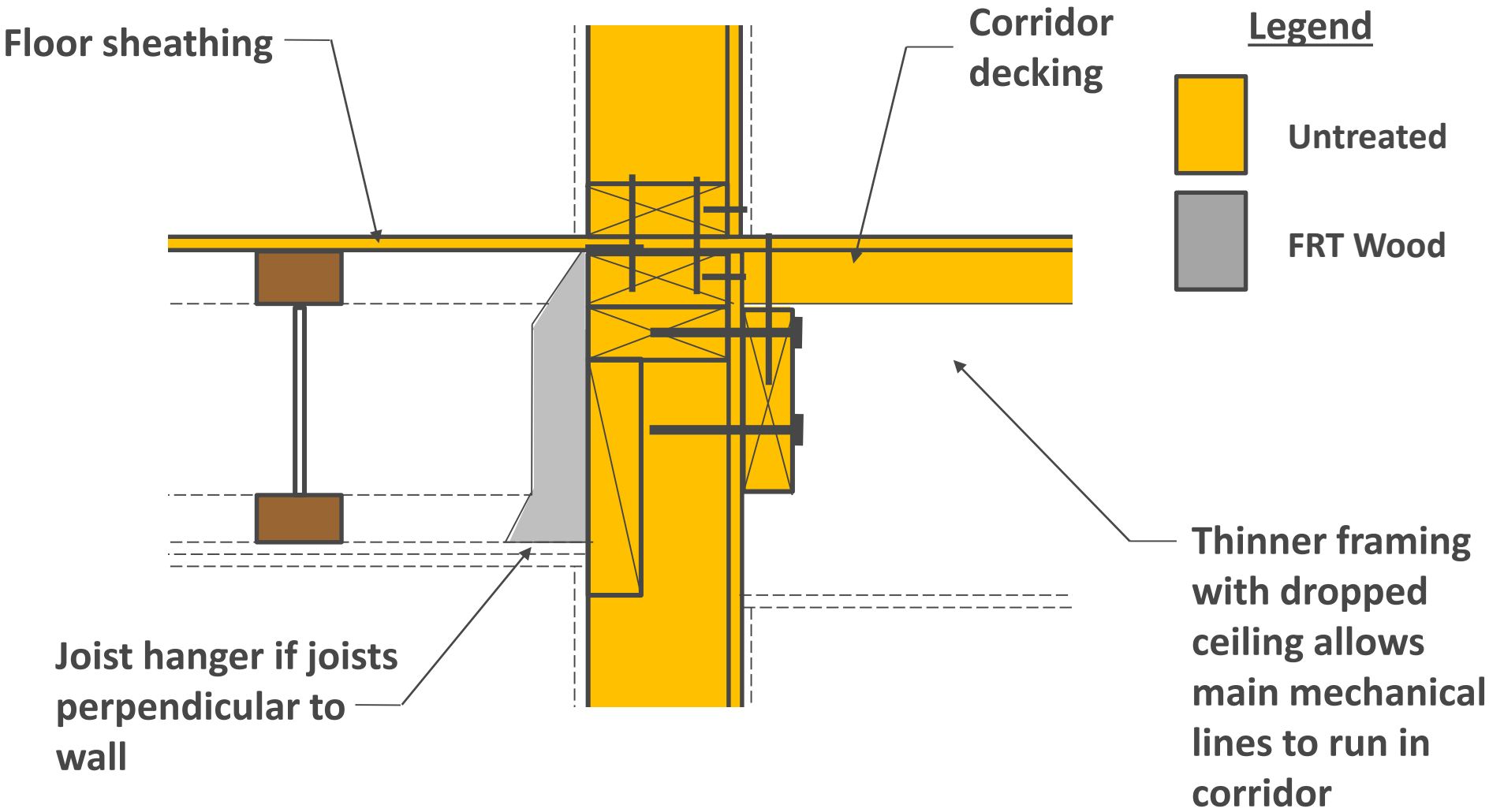

Balconies – IBC 1406.3

Balconies of combustible construction and not FRT shall be:

- Rated in accordance w/ Table 601 for floors
- Or be of Type IV
- And shall not exceed 50% of bldg perimeter

Exceptions

- Balconies in Type III, IV and V can be of type V const and shall not have fire resistance rating if sprinkler protection provided
- Untreated wood is permitted for rails and guardrails

Balconies – IBC 1406.3

So….

For Type III or V balcony options are:

1. Non-combustible – no sprinklers/no fire rating
2. FRT – no fire sprinklers/no fire rating
3. Type IV– no fire sprinklers/no fire rating
4. Non treated – fire sprinkler/no fire rating
5. Non treated – fire rated per 601 & 602/ no sprinkler

Balconies – Exterior Wall Penetration

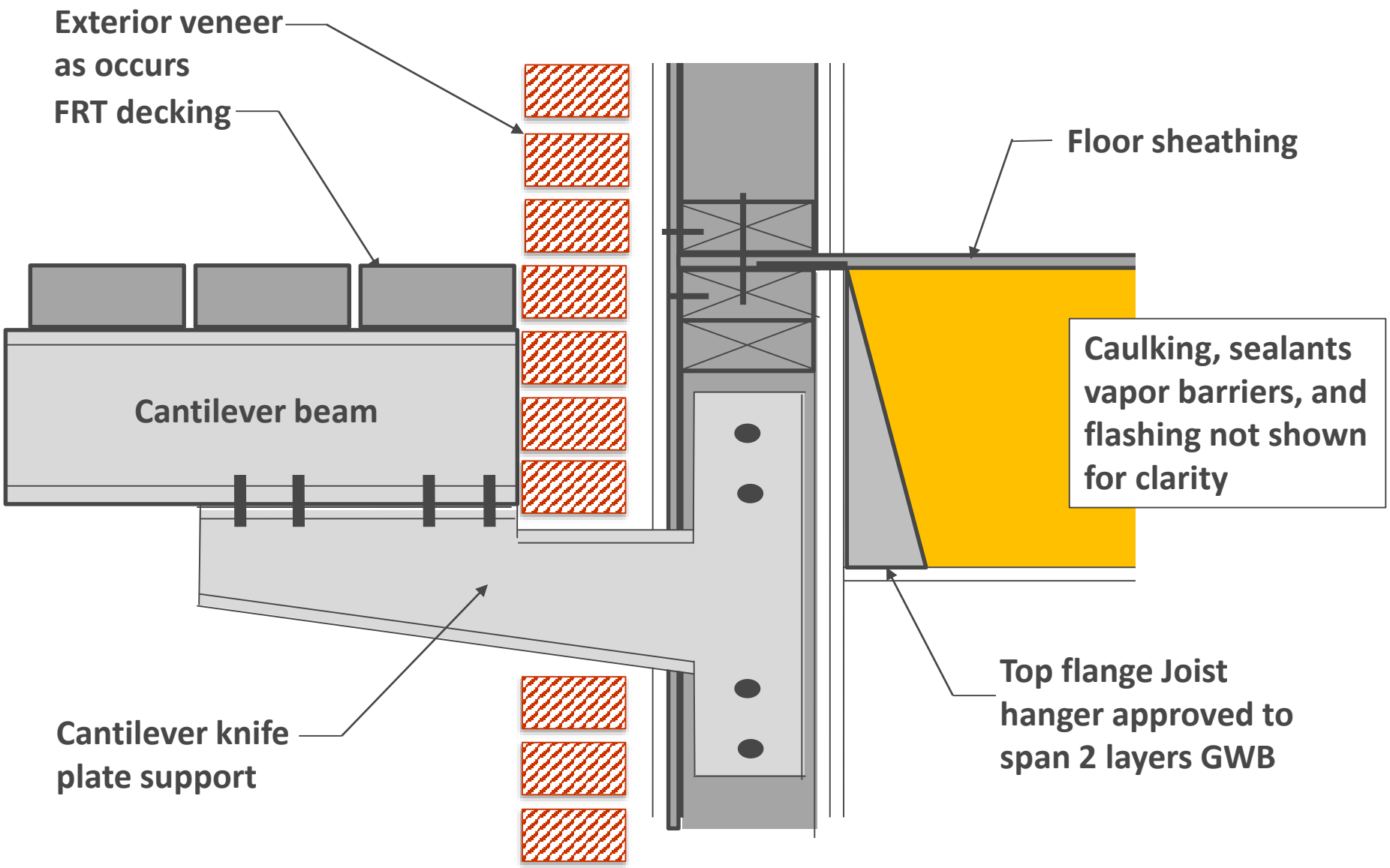

Questions?

This concludes The American Institute of Architects Continuing Education Systems Course

Archie Landreman

WoodWorks

262-497-5550

archie@woodworks.org

Copyright Materials

This presentation is protected by US and International Copyright laws. Reproduction, distribution, display and use of the presentation without written permission of the speaker is prohibited.

© The Wood Products Council 2016