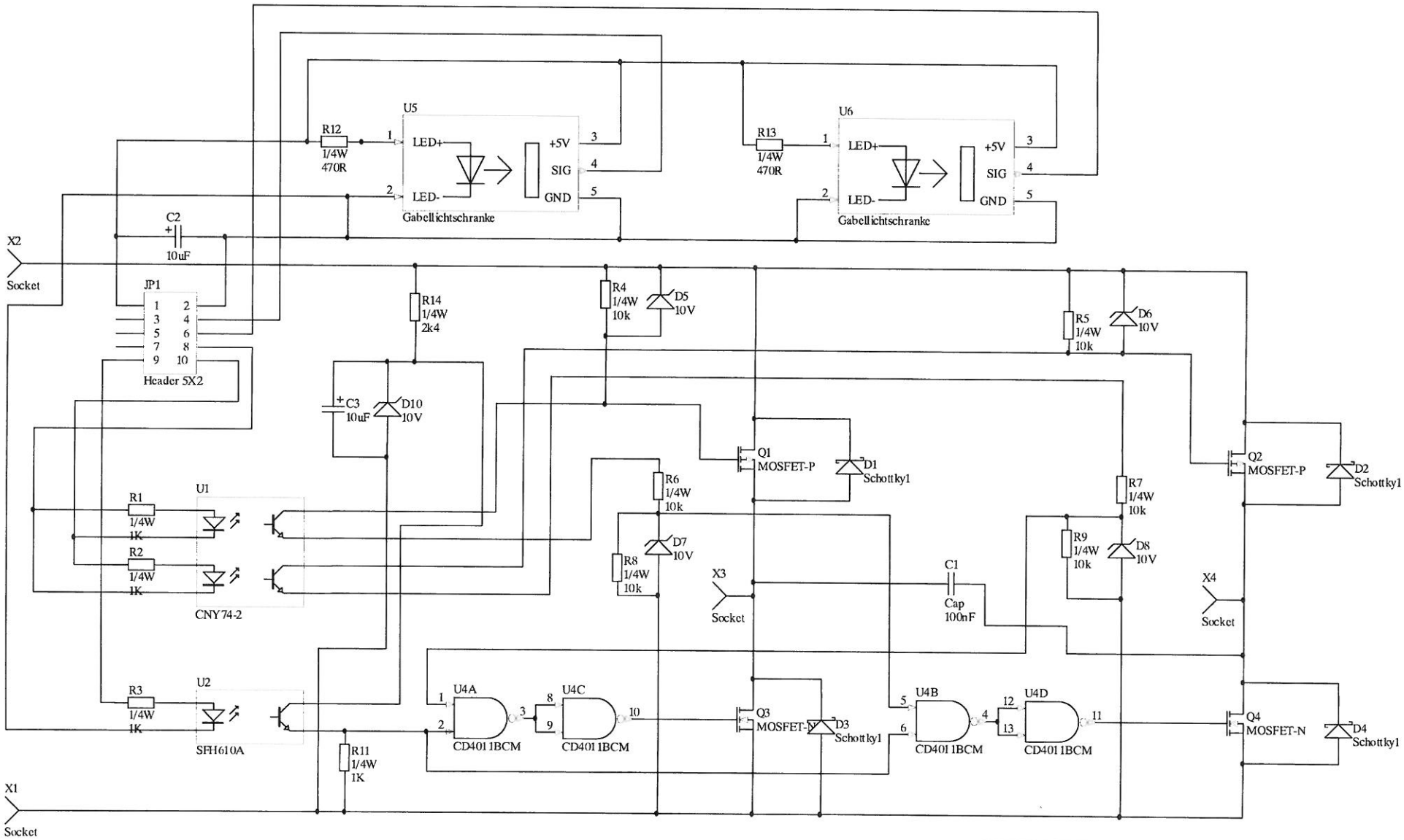

Title		
Size A4	Number	Revision
Date: 16.02.2006		Sheet of
File: Z:\privat\...\Motortreiber.SCHDOC		Drawn By: