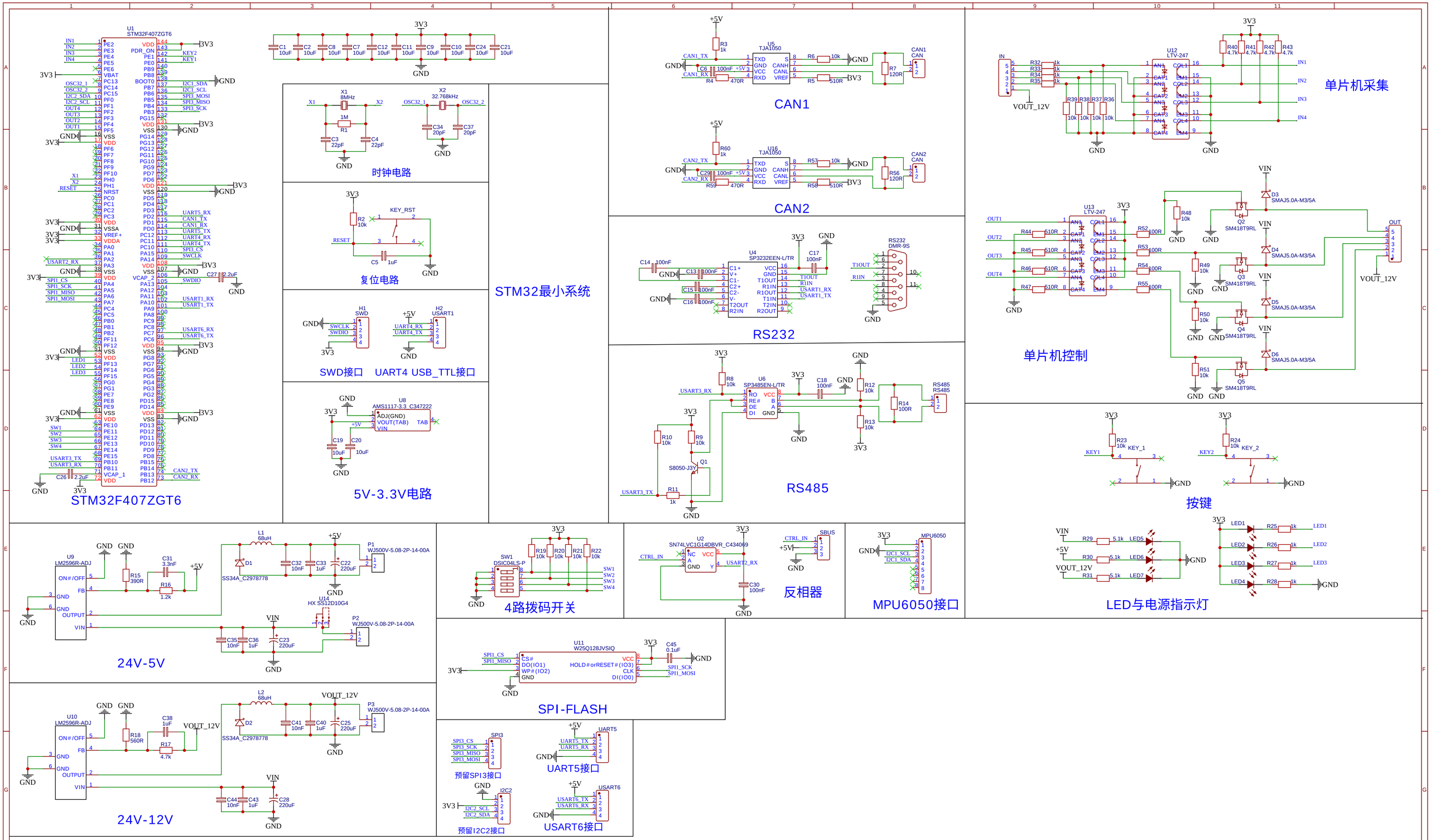

TITLE: Mickrobot	REV: 1.0
Company: Your Company	Sheet: 1/1
Date: 2023-10-28 Drawn By: chenqiuji	