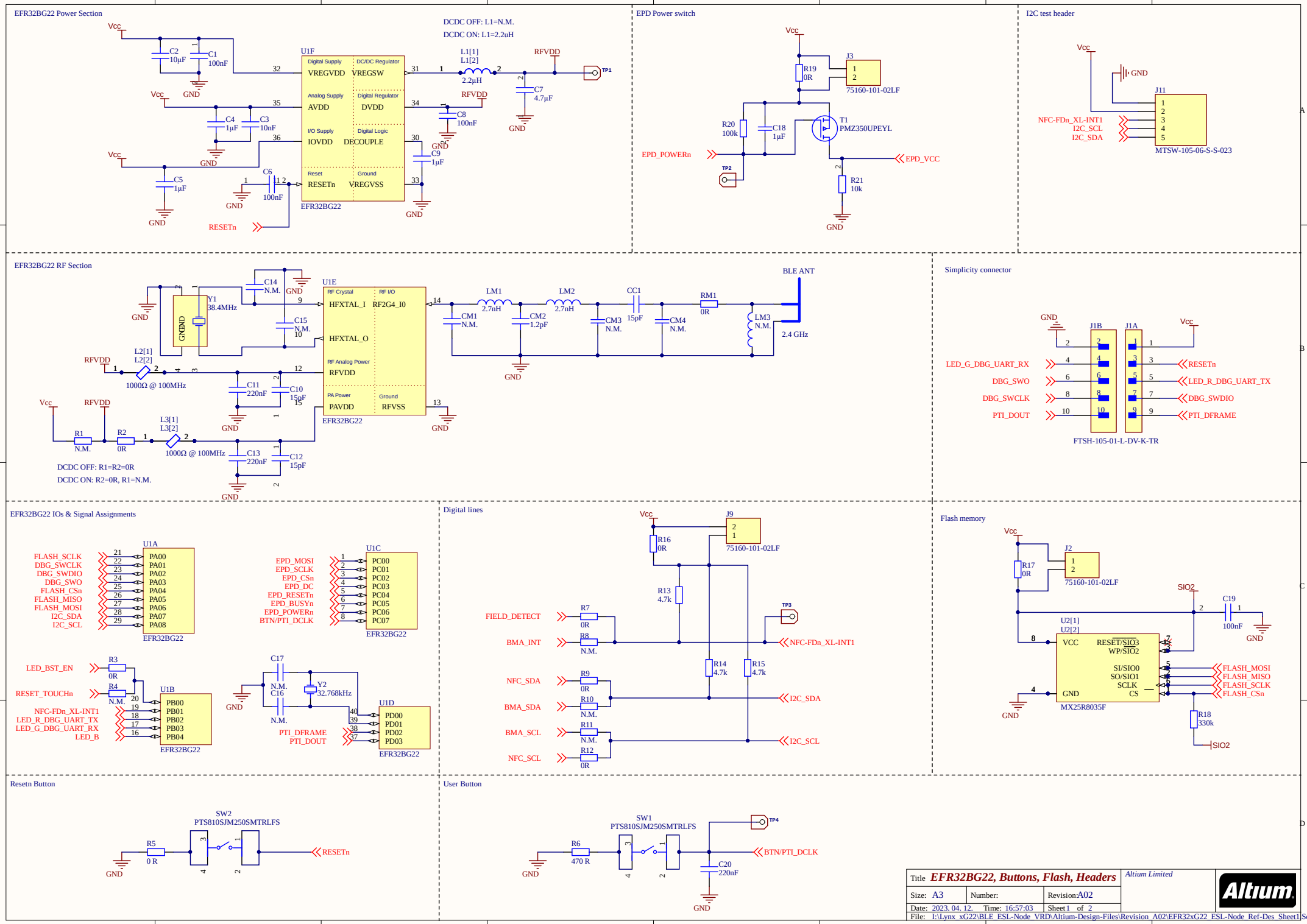
EFR32BG22 Power Section
DCDC OFF: L1=N.M.
DCDC ON: L1=2.2uH
U1F
EFR32BG22
VREGVDD
VREGSW
AVDD
DVDD
IOVDD
DECOUPLE
RESETn
VREGVSS
L1[1]
L1[2]
2.2µH
RFVDD
C2 10µF
C1 100nF
C4 1µF
C3 10nF
C5 1µF
C6 100nF
C7 4.7µF
C8 100nF
C9 1µF
EPD Power switch
J3
75160-101-02LF
R19 0R
R20 100k
C18 1µF
T1 PMZ350UPEYL
R21 10k
EPD_POWERn
EPD_VCC
I2C test header
J11
MTSW-105-06-S-S-023
NFC-FDn_XL-INT1
I2C_SCL
I2C_SDA
EFR32BG22 RF Section
U1E
EFR32BG22
HFXTAL_I
HFXTAL_O
RF2G4_I0
RFVDD
PAVDD
RFVSS
Y1 38.4MHz
C14 N.M.
C15 N.M.
L2[1]
L2[2]
1000Ω @ 100MHz
C11 220nF
C10 15pF
L3[1]
L3[2]
C13 220nF
C12 15pF
R1 N.M.
R2 0R
DCDC OFF: R1=R2=0R
DCDC ON: R2=0R, R1=N.M.
LM1 2.7nH
LM2 2.7nH
CC1 15pF
RM1 0R
CM1 N.M.
CM2 1.2pF
CM3 N.M.
CM4 N.M.
LM3 N.M.
BLE ANT
2.4 GHz
Simplicity connector
J1B
J1A
FTSH-105-01-L-DV-K-TR
LED_G_DBG_UART_RX
DBG_SWO
DBG_SWCLK
PTI_DOUT
RESETn
LED_R_DBG_UART_TX
DBG_SWDIO
PTI_DFRAME
EFR32BG22 IOs & Signal Assignments
U1A
FLASH_SCLK
DBG_SWCLK
DBG_SWDIO
DBG_SWO
FLASH_CSn
FLASH_MISO
FLASH_MOSI
I2C_SDA
I2C_SCL
U1C
EPD_MOSI
EPD_SCLK
EPD_CSn
EPD_DC
EPD_RESETn
EPD_BUSYn
EPD_POWERn
BTN/PTI_DCLK
U1B
LED_BST_EN
RESET_TOUCHn
NFC-FDn_XL-INT1
LED_R_DBG_UART_TX
LED_G_DBG_UART_RX
LED_B
R3 0R
R4 N.M.
C17 N.M.
C16 N.M.
Y2 32.768kHz
U1D
PTI_DFRAME
PTI_DOUT
Digital lines
J9
75160-101-02LF
R16 0R
R13 4.7k
R14 4.7k
R15 4.7k
FIELD_DETECT
BMA_INT
NFC_SDA
BMA_SDA
BMA_SCL
NFC_SCL
R7 0R
R8 N.M.
R9 0R
R10 N.M.
R11 N.M.
R12 0R
NFC-FDn_XL-INT1
I2C_SDA
I2C_SCL
Flash memory
J2
75160-101-02LF
R17 0R
C19 100nF
U2[1]
U2[2]
MX25R8035F
VCC
RESET/SIO3
WP/SIO2
SI/SIO0
SO/SIO1
SCLK
CS
GND
SIO2
R18 330k
FLASH_MOSI
FLASH_MISO
FLASH_SCLK
FLASH_CSn
Resetn Button
SW2
PTS810SJM250SMTRLFS
R5 0 R
User Button
SW1
PTS810SJM250SMTRLFS
R6 470 R
C20 220nF
BTN/PTI_DCLK
Title EFR32BG22, Buttons, Flash, Headers
Altium Limited
Size: A3
Number:
Revision: A02
Date: 2023. 04. 12.
Time: 16:57:03
Sheet 1 of 2
File: I:\Lynx_xG22\BLE_ESL-Node_VRD\Altium-Design-Files\Revision_A02\EFR32xG22_ESL-Node_Ref-Des_Sheet1.SchDoc

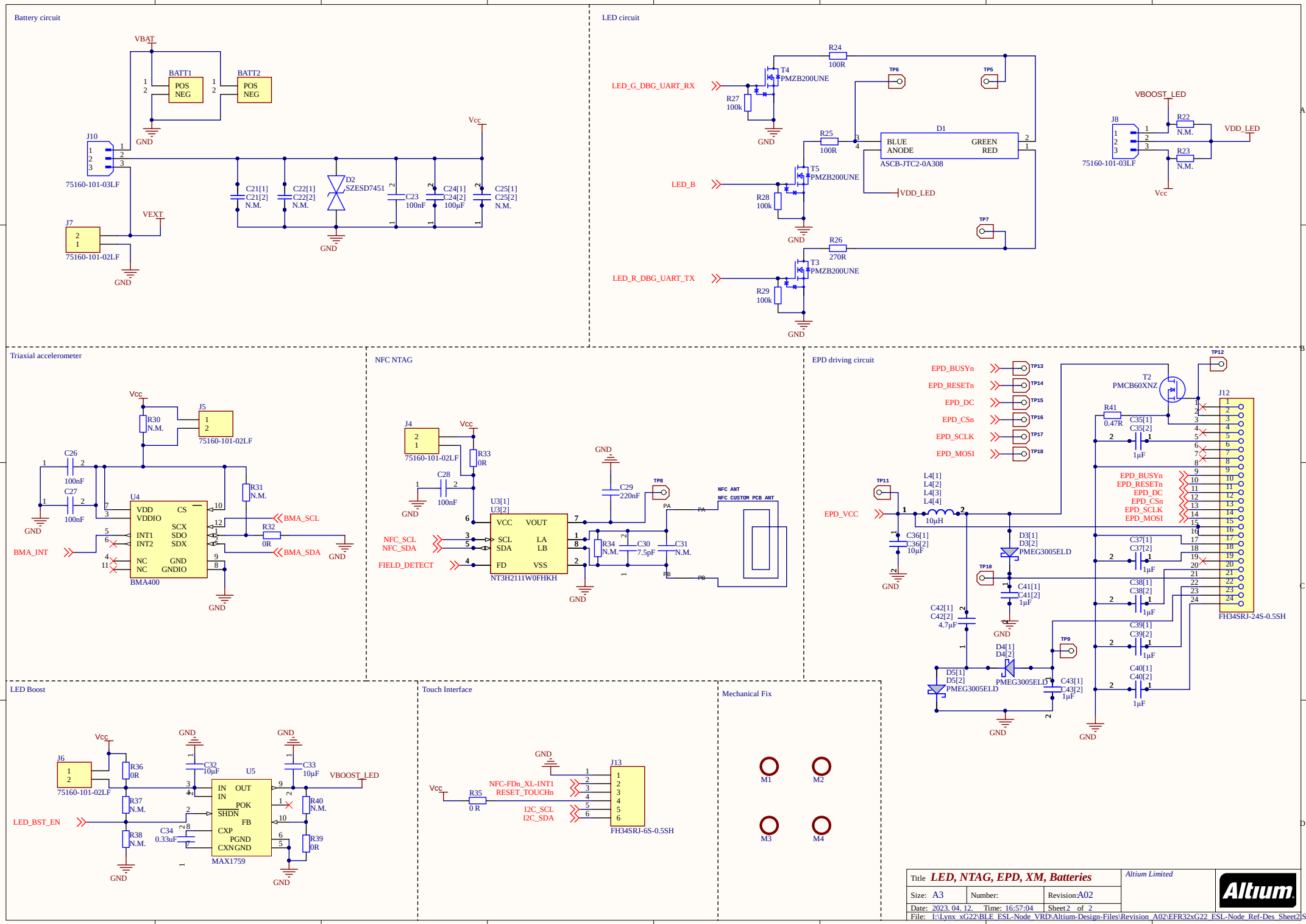
Battery circuit
VBAT
BATT1
POS
NEG
BATT2
POS
NEG
GND
J10
75160-101-03LF
Vcc
C21[1]
C21[2]
N.M.
C22[1]
C22[2]
N.M.
D2
SZESD7451
C23
100nF
C24[1]
C24[2]
100µF
C25[1]
C25[2]
N.M.
VEXT
J7
75160-101-02LF
LED circuit
R24
100R
T4
PMZB200UNE
LED_G_DBG_UART_RX
R27
100k
TP6
TP5
D1
BLUE
ANODE
GREEN
RED
ASCB-JTC2-0A308
R25
100R
T5
PMZB200UNE
LED_B
R28
100k
VDD_LED
TP7
R26
270R
T3
PMZB200UNE
LED_R_DBG_UART_TX
R29
100k
VBOOST_LED
J8
75160-101-03LF
R22
N.M.
R23
N.M.
VDD_LED
Triaxial accelerometer
R30
N.M.
J5
75160-101-02LF
C26
100nF
C27
100nF
U4
VDD
VDDIO
CS
SCX
INT1
INT2
SDO
SDX
NC
NC
GND
GNDIO
BMA400
R31
N.M.
R32
0R
BMA_SCL
BMA_SDA
BMA_INT
NFC NTAG
J4
75160-101-02LF
R33
0R
C28
100nF
U3[1]
U3[2]
VCC
VOUT
SCL
SDA
LA
LB
FD
VSS
NT3H2111W0FHKH
NFC_SCL
NFC_SDA
FIELD_DETECT
C29
220nF
TP8
R34
N.M.
C30
7.5pF
C31
N.M.
NFC ANT
NFC CUSTOM PCB ANT
EPD driving circuit
EPD_BUSYn
EPD_RESETn
EPD_DC
EPD_CSn
EPD_SCLK
EPD_MOSI
TP13
TP14
TP15
TP16
TP17
TP18
TP12
T2
PMCB60XNZ
R41
0.47R
C35[1]
C35[2]
1µF
J12
FH34SRJ-24S-0.5SH
TP11
EPD_VCC
L4[1]
L4[2]
L4[3]
L4[4]
10µH
C36[1]
C36[2]
10µF
D3[1]
D3[2]
PMEG3005ELD
TP10
C41[1]
C41[2]
1µF
C42[1]
C42[2]
4.7µF
D4[1]
D4[2]
PMEG3005ELD
TP9
D5[1]
D5[2]
PMEG3005ELD
C43[1]
C43[2]
1µF
C37[1]
C37[2]
C38[1]
C38[2]
C39[1]
C39[2]
C40[1]
C40[2]
LED Boost
J6
75160-101-02LF
R36
0R
R37
N.M.
R38
N.M.
C32
10µF
C33
10µF
U5
IN
IN
OUT
POK
SHDN
FB
CXP
PGND
CXN
GND
MAX1759
C34
0.33uF
R40
N.M.
R39
0R
VBOOST_LED
LED_BST_EN
Touch Interface
R35
0 R
NFC-FDn_XL-INT1
RESET_TOUCHn
I2C_SCL
I2C_SDA
J13
FH34SRJ-6S-0.5SH
Mechanical Fix
M1
M2
M3
M4
Title LED, NTAG, EPD, XM, Batteries
Altium Limited
Size: A3
Number:
Revision:A02
Date: 2023. 04. 12.
Time: 16:57:04
Sheet2 of 2
File: I:\Lynx_xG22\BLE_ESL-Node_VRD\Altium-Design-Files\Revision_A02\EFR32xG22_ESL-Node_Ref-Des_Sheet2.SchDoc
Altium