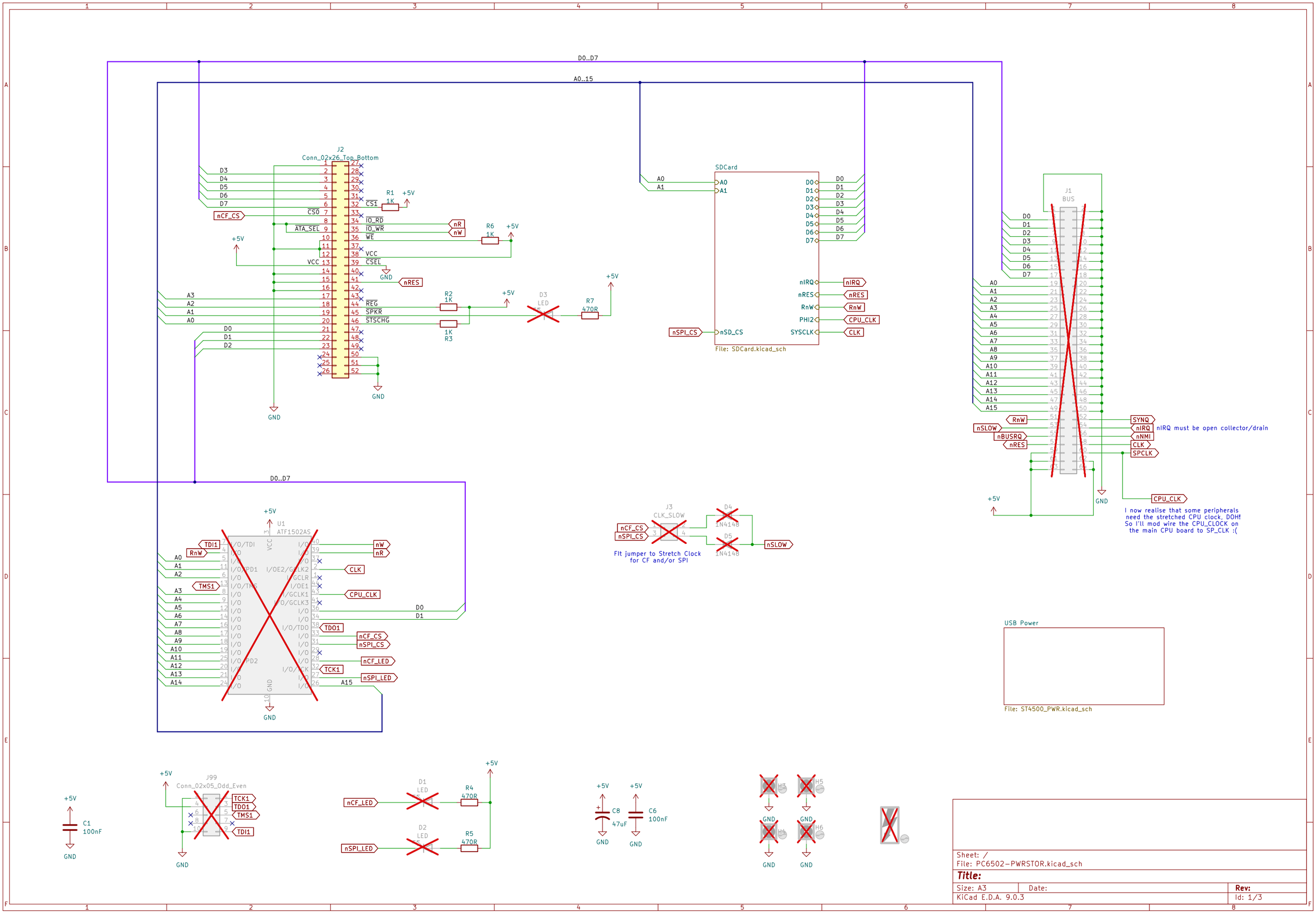
D0..D7
A0..15
J2
Conn_02x26_Top_Bottom
D3
D4
D5
D6
D7
nCF_CS
CS0
ATA_SEL
CS1
IO_RD
IO_WR
WE
VCC
CSEL
nR
nW
R1
1K
R6
1K
+5V
GND
nRES
A3
A2
A1
A0
D0
D1
D2
REG
SPKR
STSCHG
R2
1K
R3
1K
D3
LED
R7
470R
SDCard
A0
A1
D0
D1
D2
D3
D4
D5
D6
D7
nIRQ
nRES
RnW
PHI2
SYSCLK
nSPI_CS
nSD_CS
CPU_CLK
CLK
File: SDCard.kicad_sch
J1
BUS
A4
A5
A6
A7
A8
A9
A10
A11
A12
A13
A14
A15
RnW
nSLOW
nBUSRQ
nRES
SYNQ
nIRQ
nNMI
CLK
SPCLK
nIRQ must be open collector/drain
CPU_CLK
I now realise that some peripherals need the stretched CPU clock, DOH! So I'll mod wire the CPU_CLOCK on the main CPU board to SP_CLK :(
U1
ATF1502AS
TDI1
RnW
TMS1
TDO1
TCK1
nCF_LED
nSPI_LED
A15
J3
CLK_SLOW
nCF_CS
nSPI_CS
D4
1N4148
D5
1N4148
nSLOW
Flt jumper to Stretch Clock for CF and/or SPI
USB Power
File: ST4500_PWR.kicad_sch
C1
100nF
J99
Conn_02x05_Odd_Even
D1
LED
D2
LED
R4
470R
R5
470R
C8
47uF
C6
100nF
H3
H4
H5
H6
Sheet: /
File: PC6502-PWRSTOR.kicad_sch
Title:
Size: A3
Date:
Rev:
KiCad E.D.A. 9.0.3
Id: 1/3

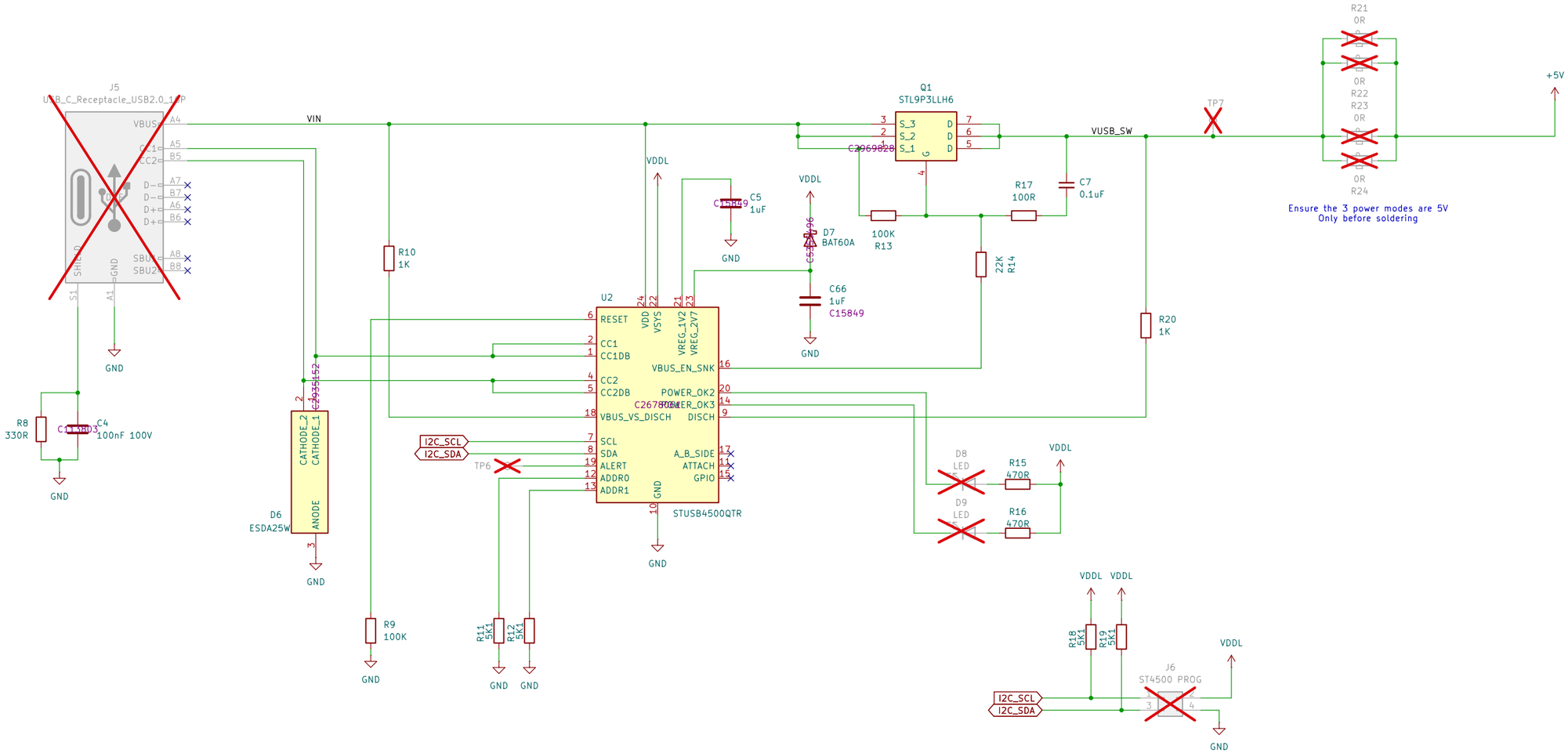

Sheet: /USB Power/
File: ST4500_PWR.kicad_sch

Title:

Size: A3	Date:	Rev:
KiCad E.D.A. 9.0.3		Id: 2/3

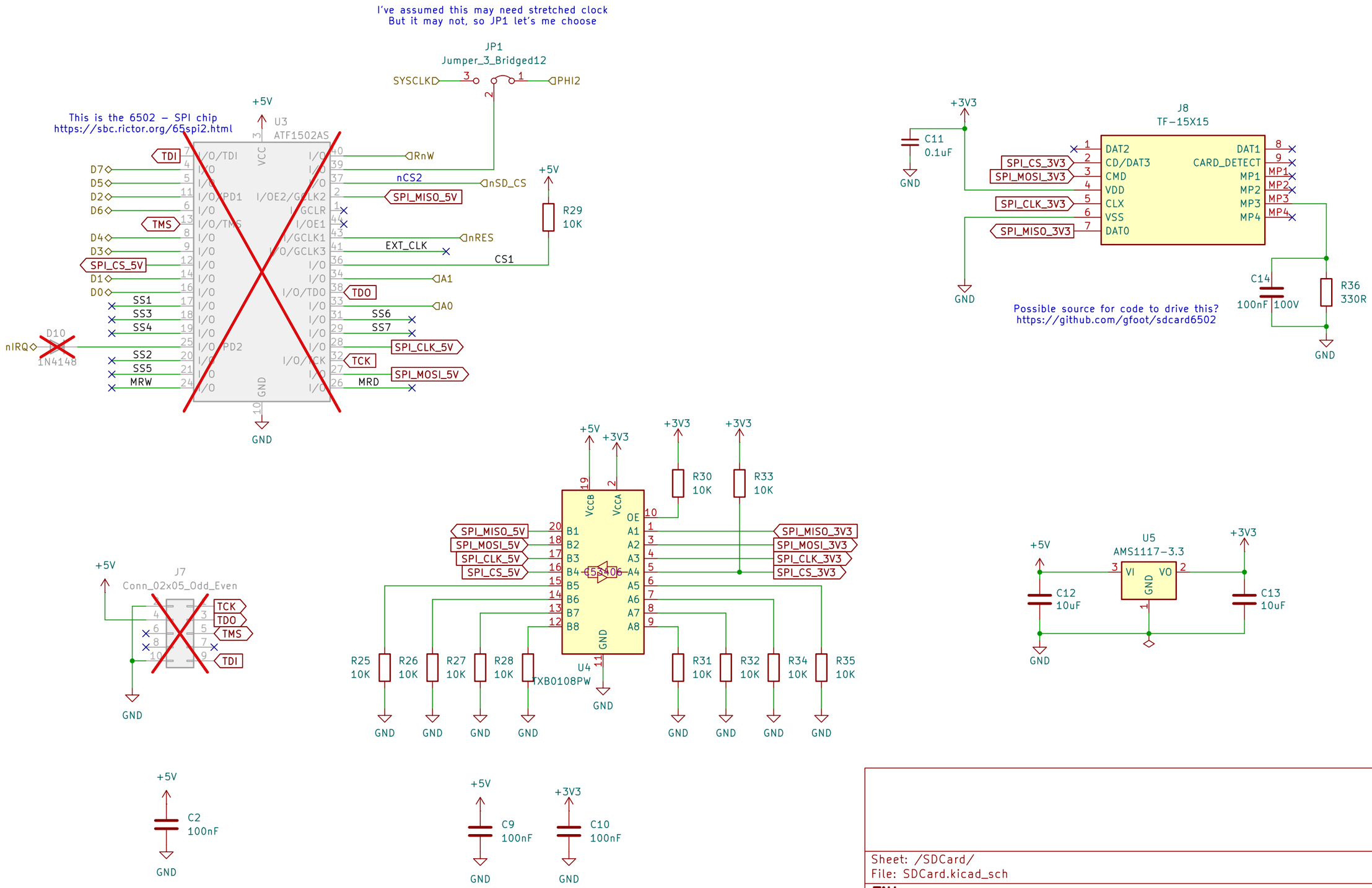

Sheet: /SDCard/
File: SDCard.kicad_sch

Title:

Size: A4	Date:	Rev:
KiCad E.D.A. 9.0.3		Id: 3/3