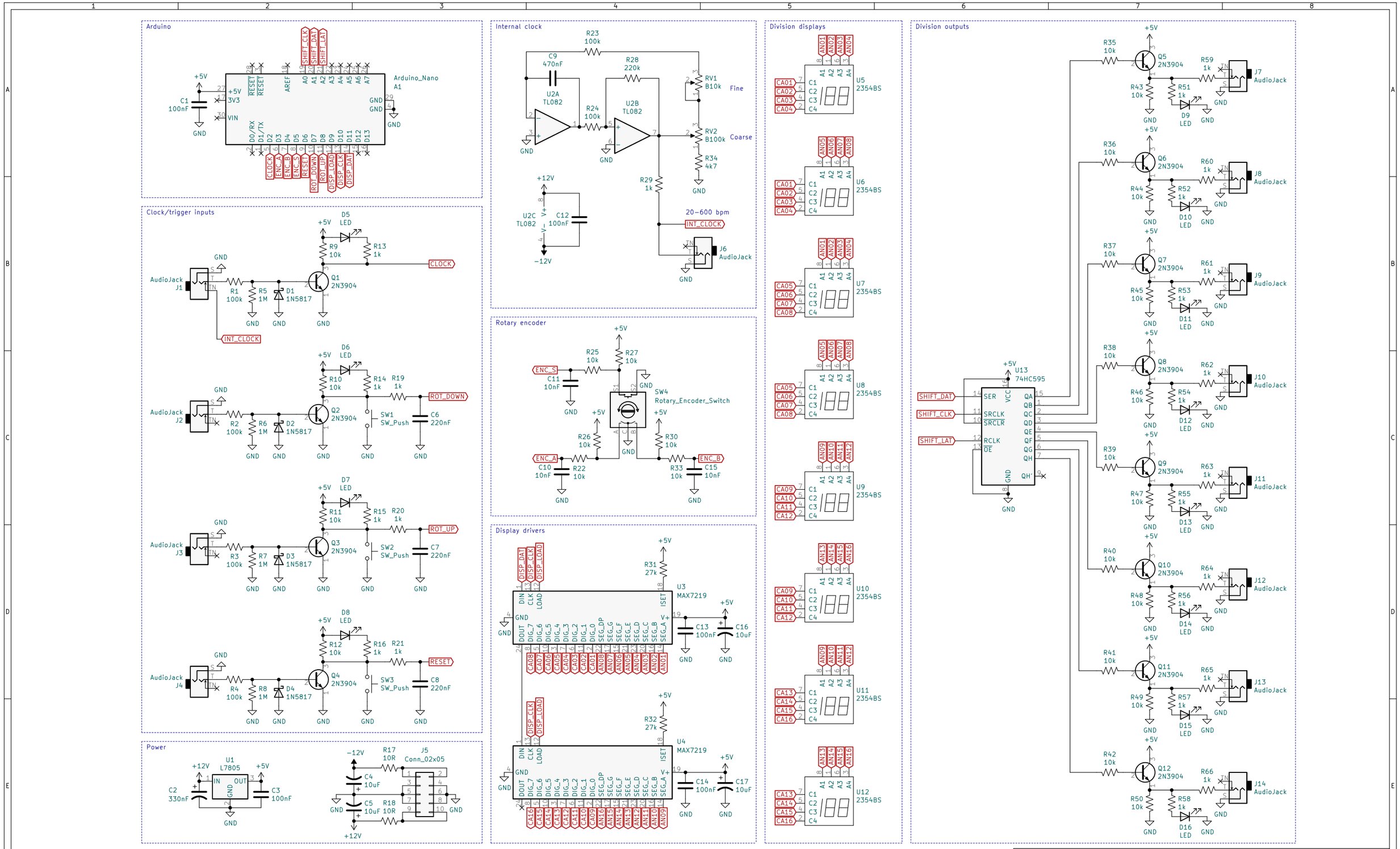

github.com/TimMJN/arduino-clock-divider

TimMJN

Sheet: /

File: arduino_clock_divider.sch

Title: Arduino Clock Divider

Size: A3	Date: 20-03-2021	**Rev: 0.7**
KiCad E.D.A. kicad (5.1.8)-1		Id: 1/1