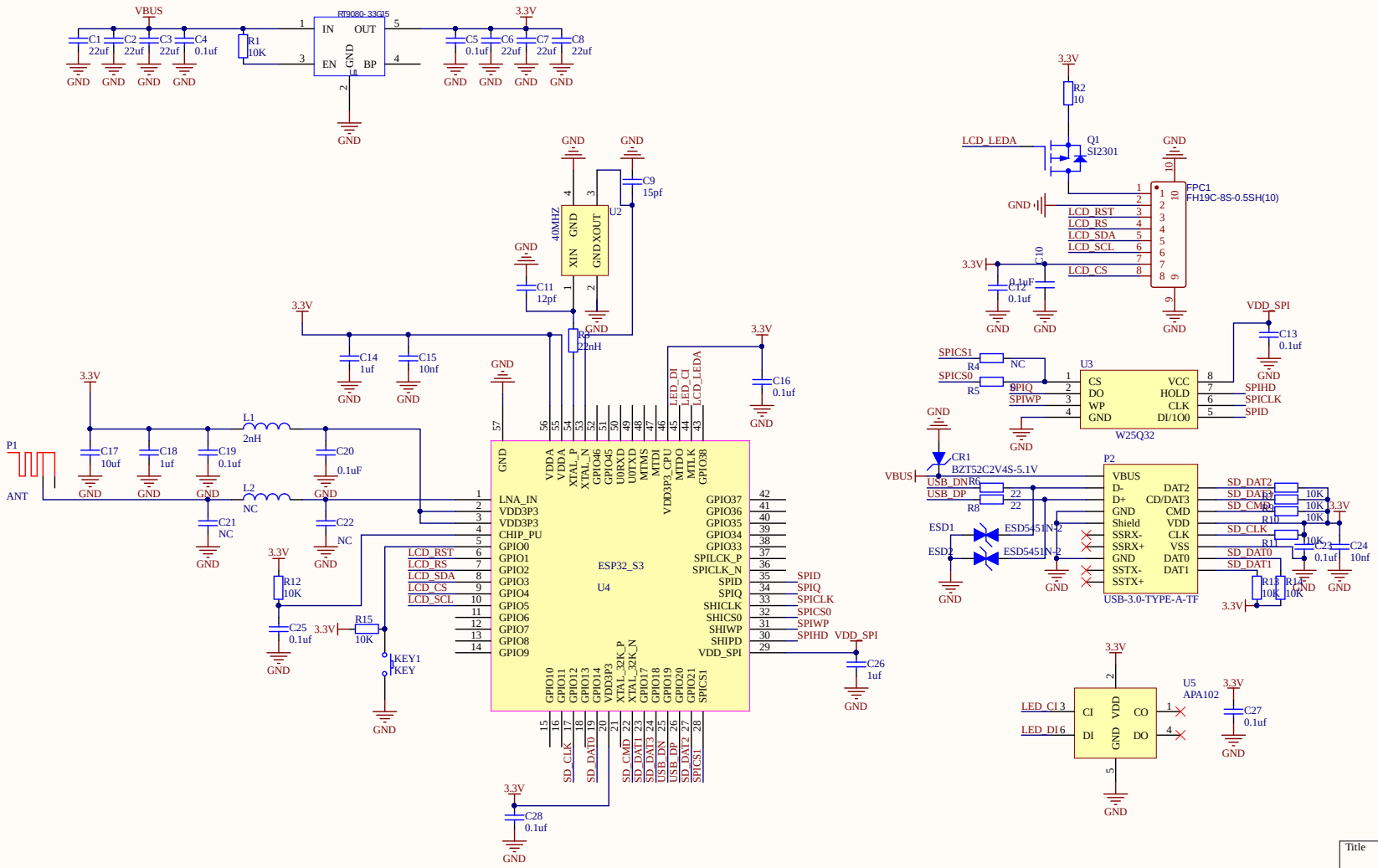

LOG: V-1.0
1.裁剪USB连接座
2.芯片BASE R8 N8 做兼容
3.SD卡加上拉，厂家连接座线序反

LOG: V-1.1
1.缩短PCB长度

Title		
Size A3	Number	Revision
Date: 2022/10/8	Sheet of	
File: D:\File\..\T-Dongle-S3.SchDoc	Drawn By:	