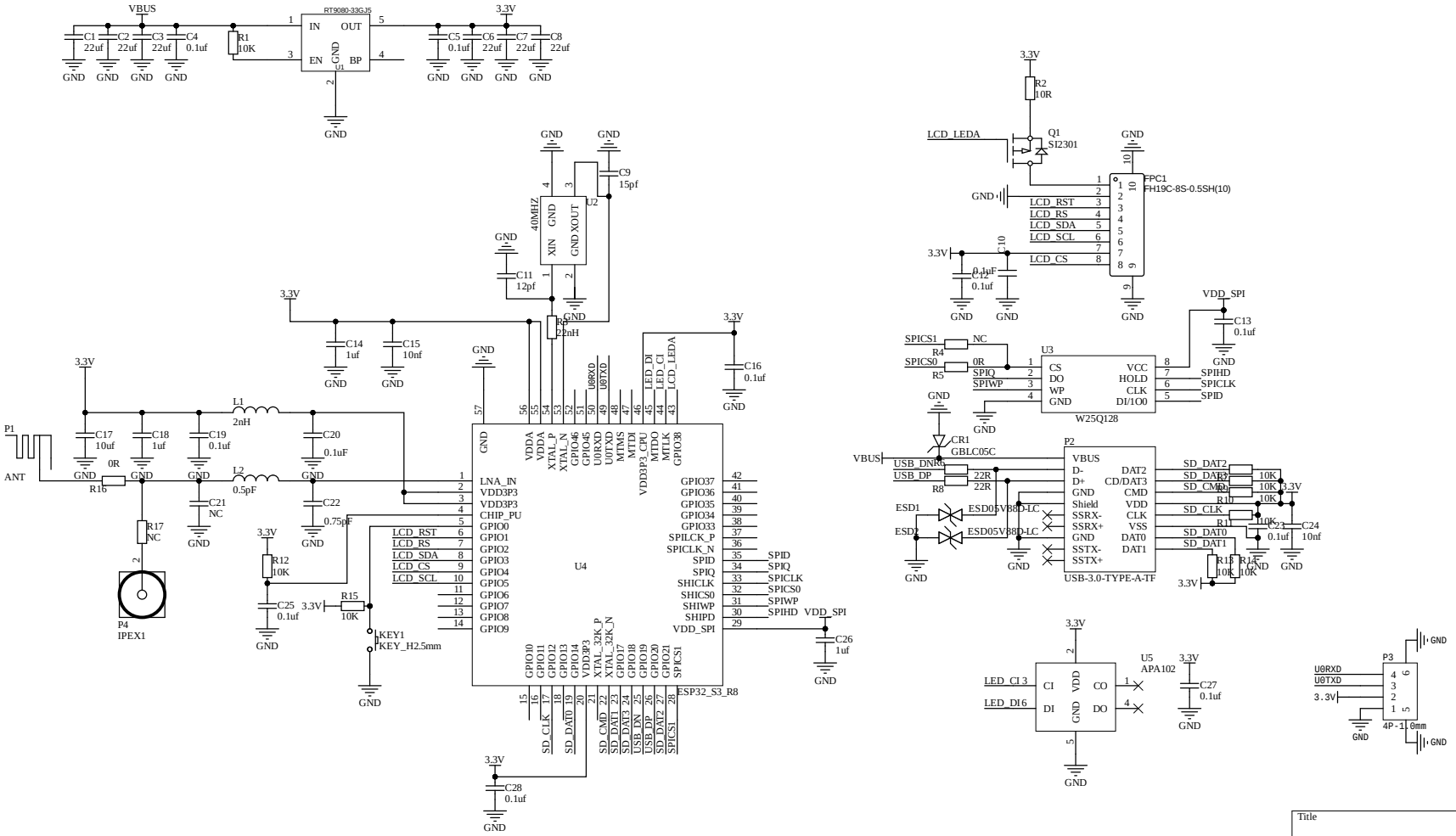

Title		
Size A3	Number	Revision
Date: 8/21/2023		Sheet of
File: C:\Users\..\T-Dongle-S3-V1.5.SchDoc		Drawn By: