OSP32.PrjPcb

Power Supply 5V

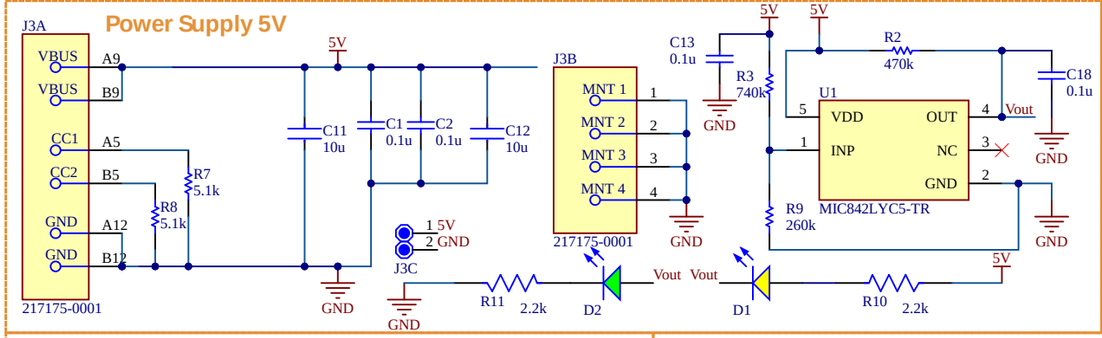

I2C Header

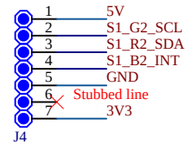

EEPROM

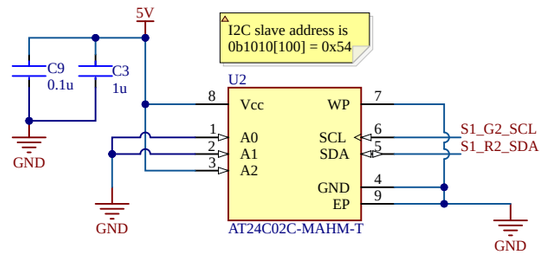

Out Connector

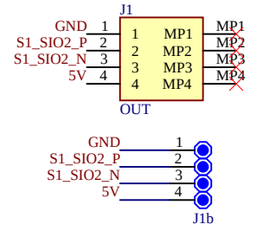

ESP32 GPIO

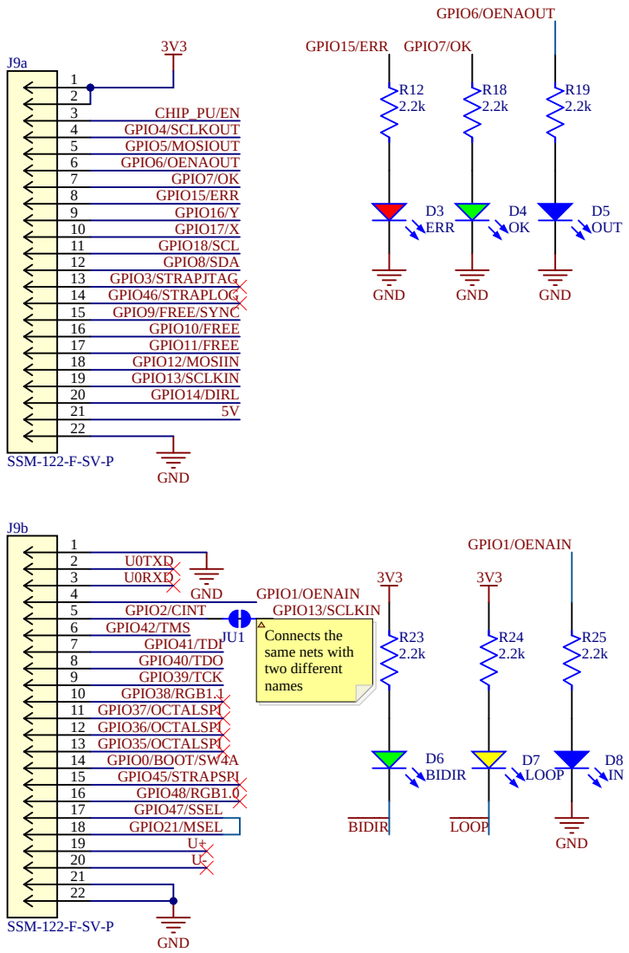

Level Shifters

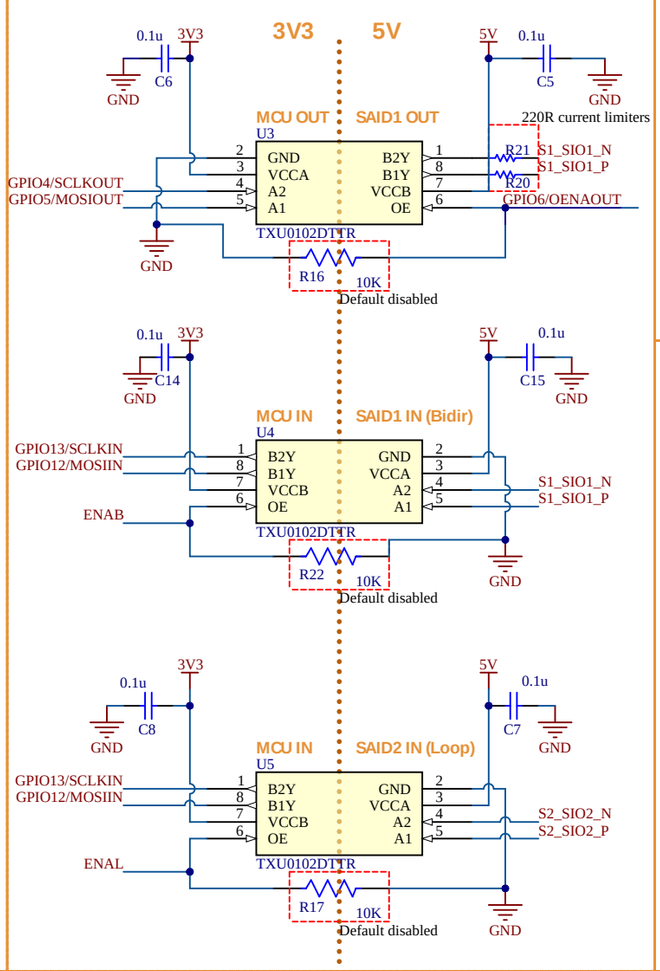

OLED Display

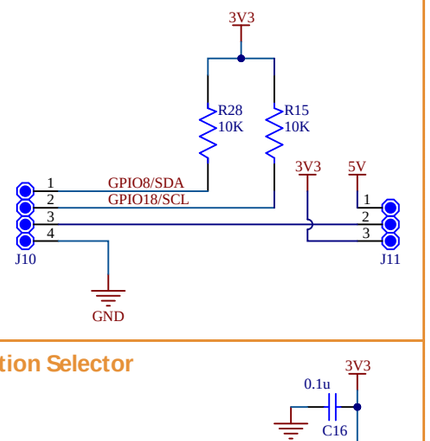

Direction Selector

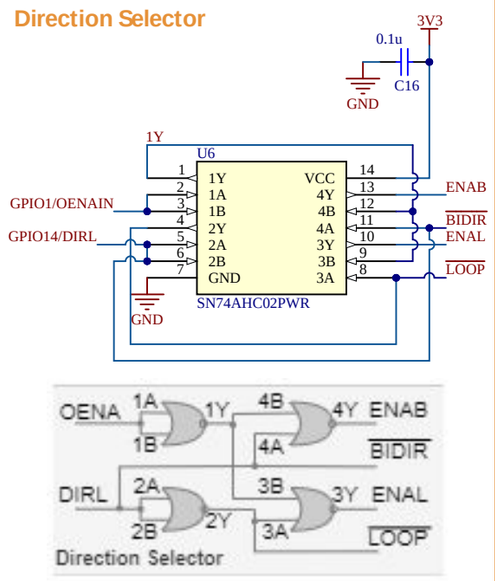

SAID S1 Out

OTP Configured for SPI+I2C

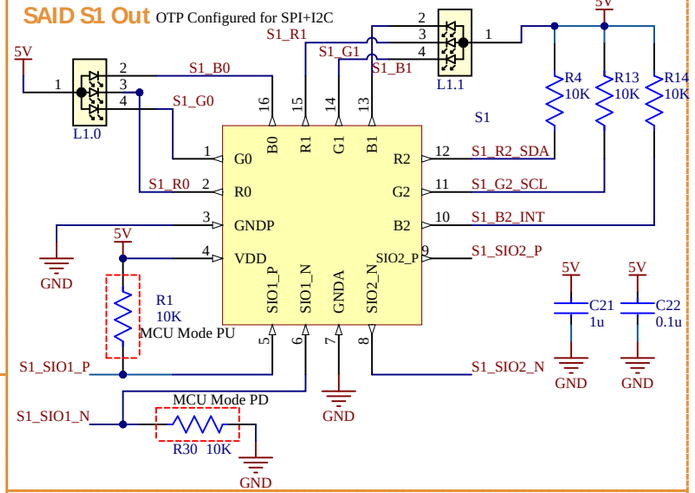

SAID S2 In

No special OTP

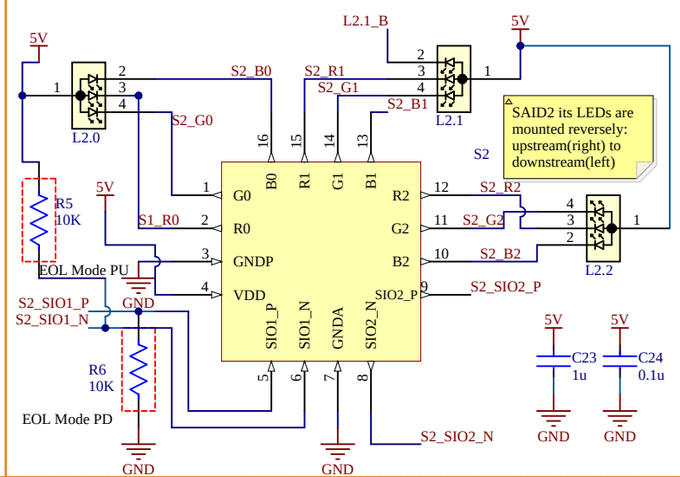

GPIO Buttons

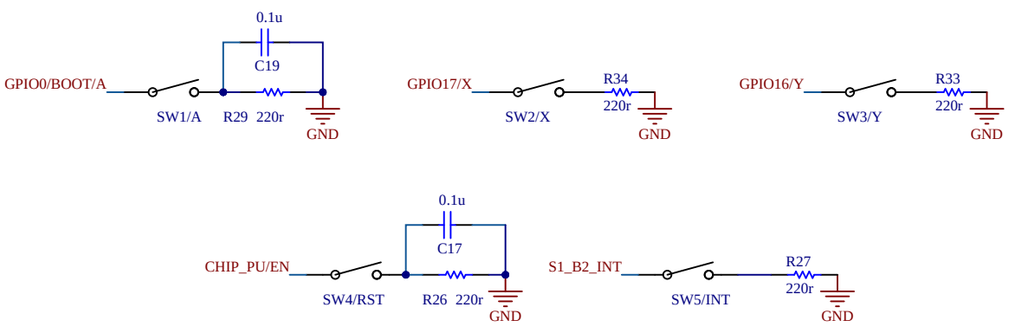

JTAG

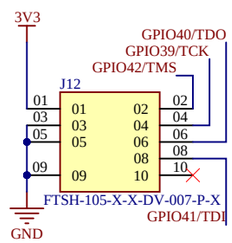

Debug pins

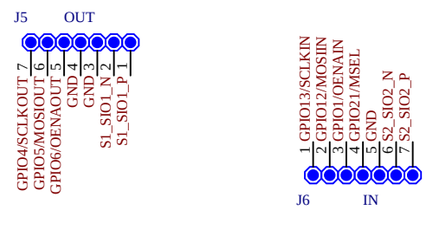

Defined State SPI IN

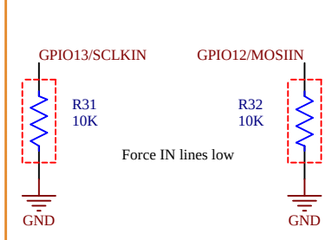

In Connector

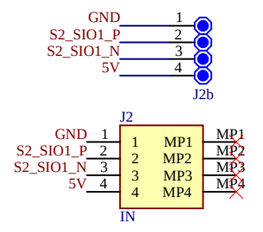

Free GPIOs

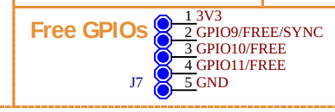

SYNC

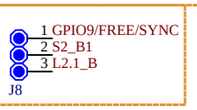

Project:	OSP32.PrjPcb	v9	
Engineer:	ASA2	06/24	
Page size:	A3	Sheet: 2 of 2	

ams OSRAM

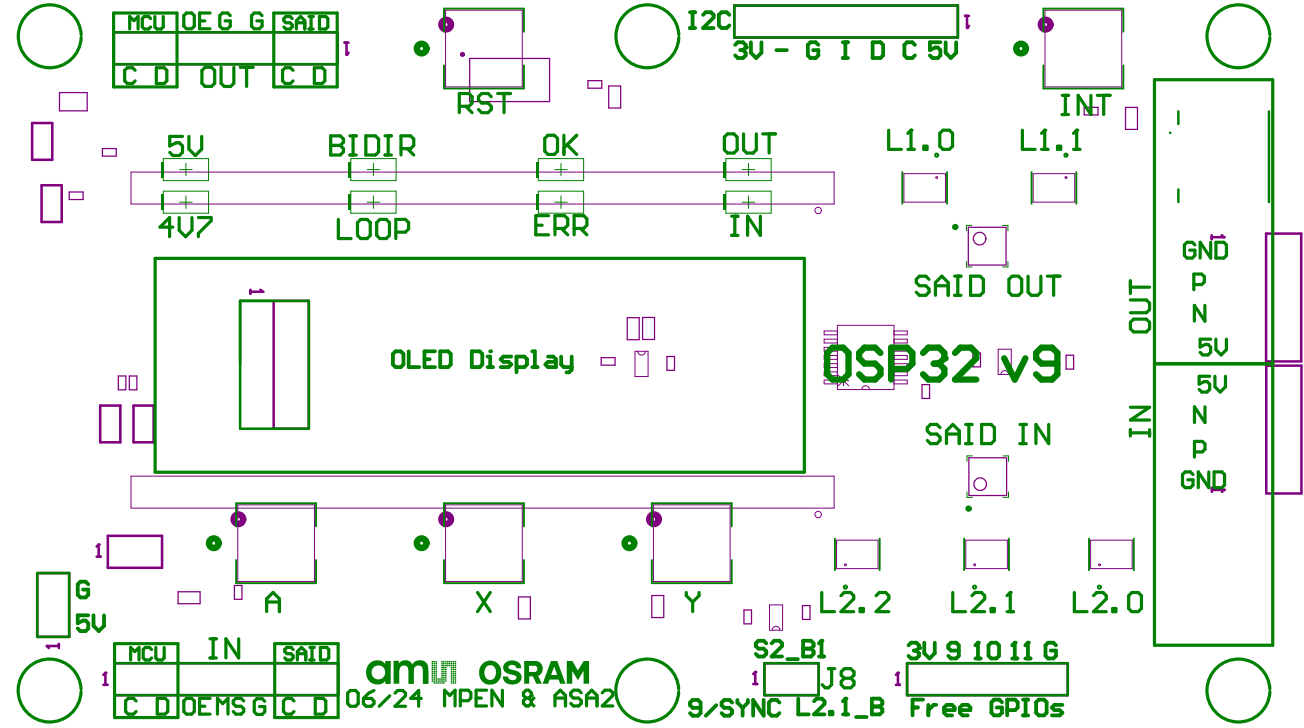
MCU
OE G G
SAID
C D
OUT
C D
RST
I2C
3V - G I D C 5V
INT
5V
BIDIR
OK
OUT
4V7
LOOP
ERR
IN
L1.0
L1.1
SAID OUT
OLED Display
OSP32 v9
SAID IN
GND
P
N
5V
OUT
5V
N
P
GND
IN
A
X
Y
L2.2
L2.1
L2.0
G
5V
MCU
IN
SAID
C D
OEMS G
C D
OSRAM
06/24 MPEN & ASA2
S2_B1
J8
9/SYNC L2.1_B
3V 9 10 11 G
Free GPIOs

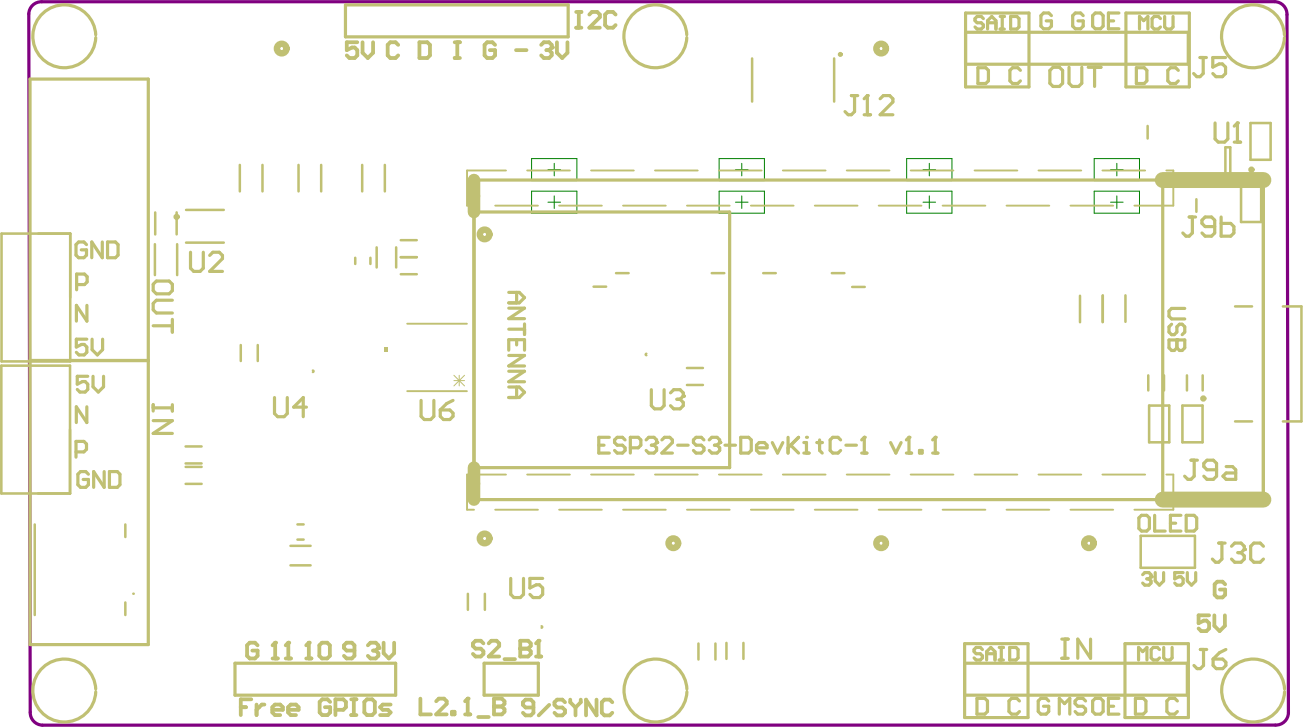
I2C
5V C D I G - 3V
J12
SAID G G OE MCU
D C OUT D C
J5
U1
J9b
GND
P
N
5V
OUT
U2
5V
N
P
GND
IN
U4
U6
ANTENNA
U3
ESP32-S3-DevKitC-1 v1.1
USB
J9a
OLED
J3C
3V 5V
G
5V
U5
G 11 10 9 3V
Free GPIOs
S2_B1
L2.1_B 9/SYNC
SAID IN MCU
D C G MSOE D C
J6

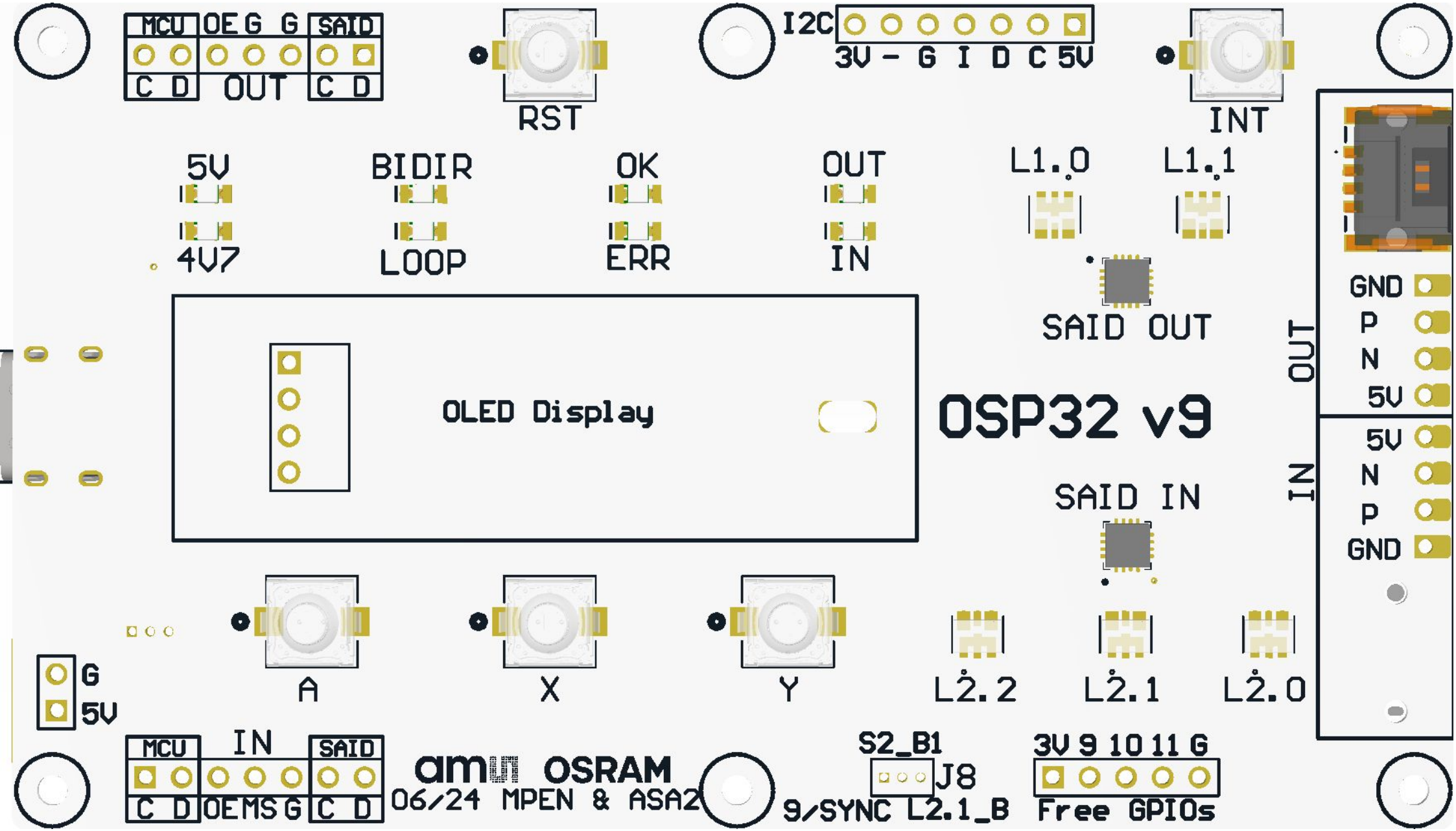
MCU
OE G G
SAID
C D
OUT
C D
RST
I2C
3V - G I D C 5V
INT
5V
4V7
BIDIR
LOOP
OK
ERR
OUT
IN
L1.0
L1.1
SAID OUT
OLED Display
OSP32 v9
OUT
GND
P
N
5V
IN
5V
N
P
GND
SAID IN
A
X
Y
L2.2
L2.1
L2.0
G
5V
MCU
IN
SAID
C D
OEMS G
C D
OSRAM
06/24 MPEN & ASA2
S2_B1
J8
9/SYNC L2.1_B
3V 9 10 11 G
Free GPIOs

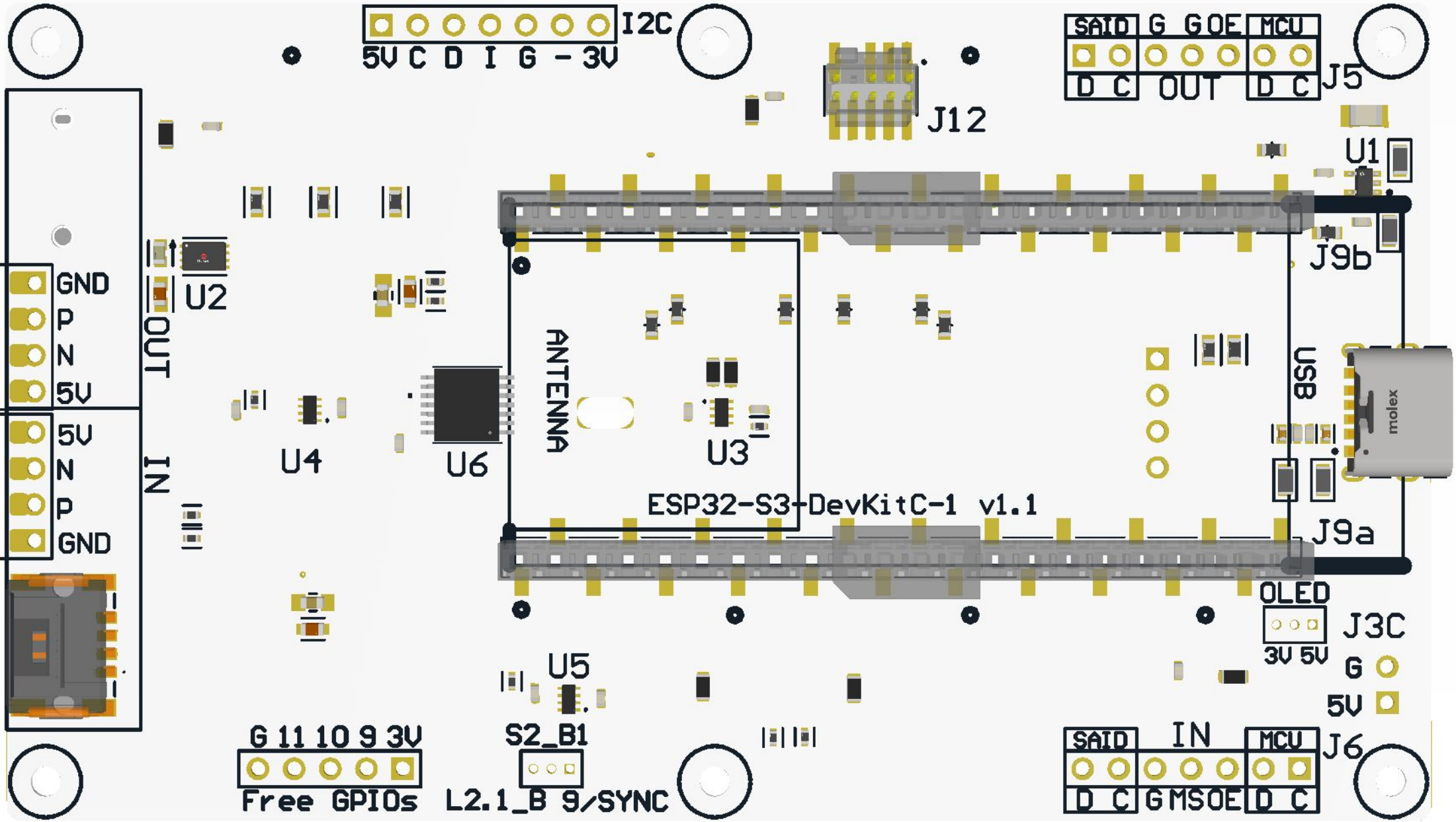
I2C
5V C D I G - 3V
J12
SAID G G OE MCU
D C OUT D C
J5
U1
J9b
GND
P
N
5V
OUT
U2
ANTENNA
U4
U6
U3
USB
molex
5V
N
P
GND
IN
ESP32-S3-DevKitC-1 v1.1
J9a
OLED
J3C
3V 5V
G
5V
U5
G 11 10 9 3V
S2_B1
SAID IN MCU
J6
D C G MSOE D C
Free GPIOs
L2.1_B 9/SYNC

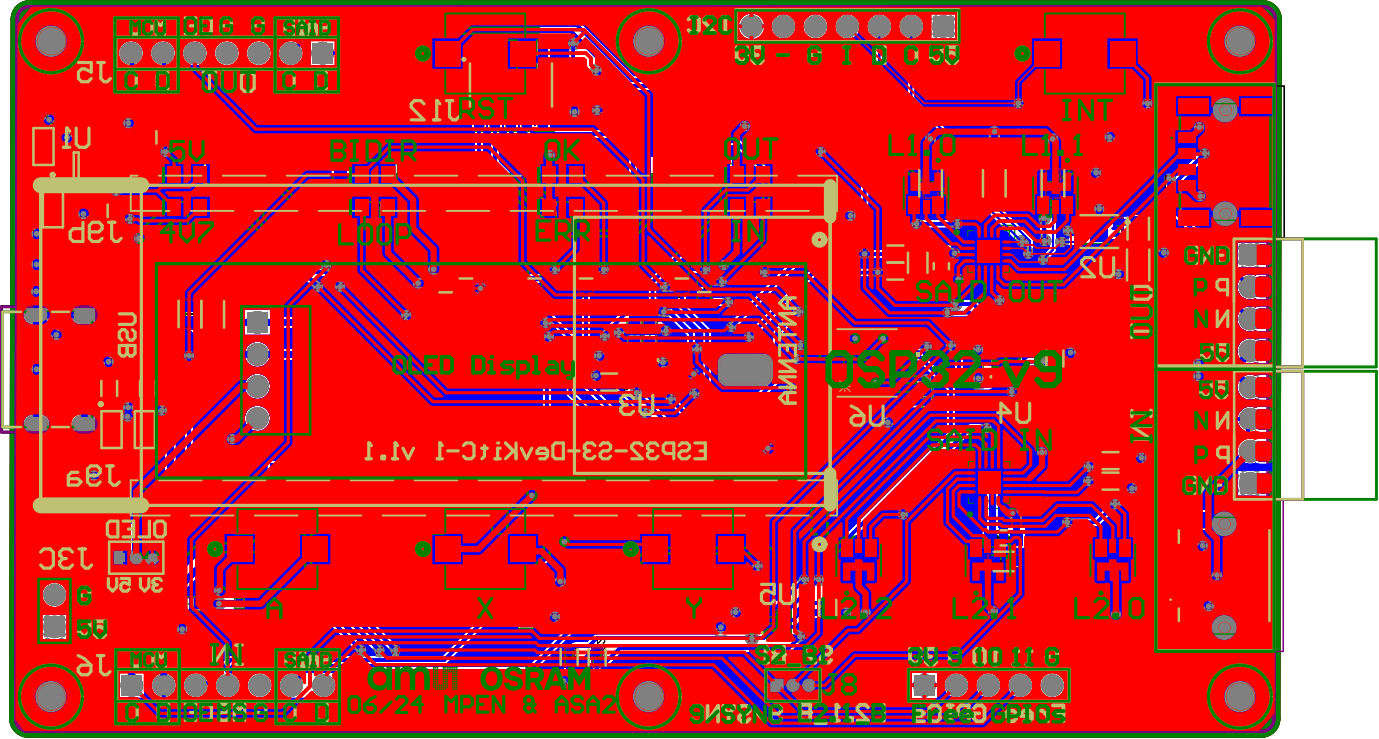

OSRAM
OLED Display
ESP32-S3-DevKitC-1 v1.1
QUT
INT
GND
P
N
OLED
3V 5V
A
X
Y
L2.2
L2.1
L2.0

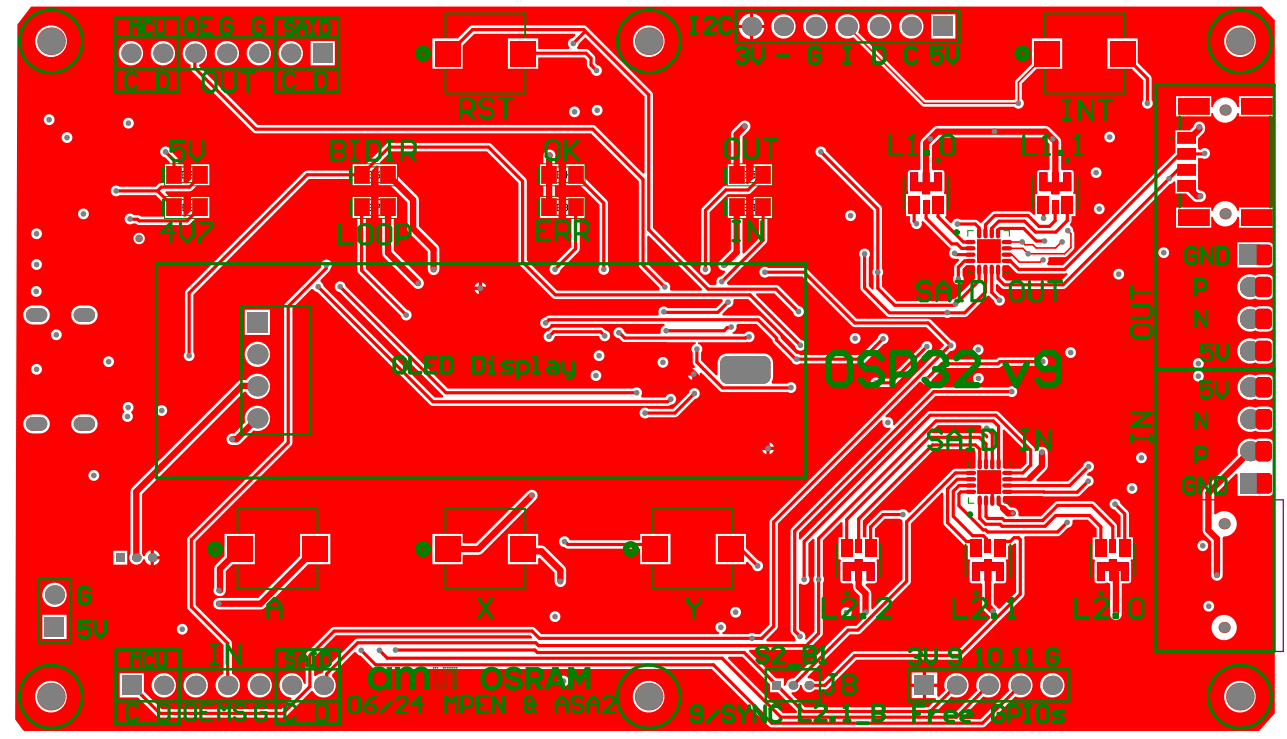
MCU
OE G G SAI0
C D OUT C D
RST
I2C
3V - G I D C 5V
INT
5V
BIDIR
OK
OUT
L1_0
L1_1
4V7
LOOP
ERR
IN
SAI0 OUT
OUT
GND
P
N
5V
OLED Display
OSP32 v9
5V
N
P
GND
SAI0 IN
IN
A
X
Y
L2_2
L2_1
L2_0
G
5V
MCU
IN
SAI0
C D DIDEMS G C D
OSRAM
06/24 MPEN & ASA2
S2_01
3V 9 10 11 G
9/SYNC L2_1 B Free GPIOs

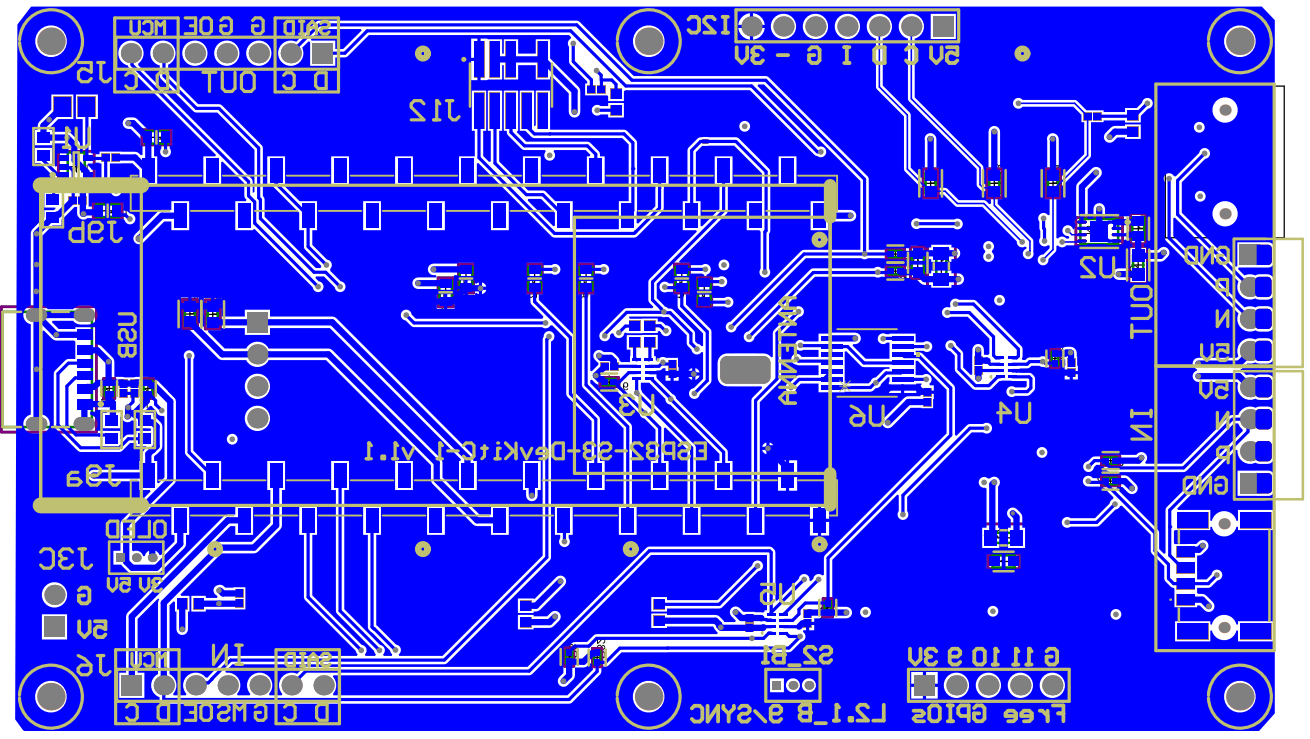
J5
J6
J8
J9
J12
J13
U2
U3
U4
U5
U6
U9
IN
OUT
GND
5V
3V
I2C
SYNC
GPIOs