OSP32.PrjPcb

Power Supply 5V

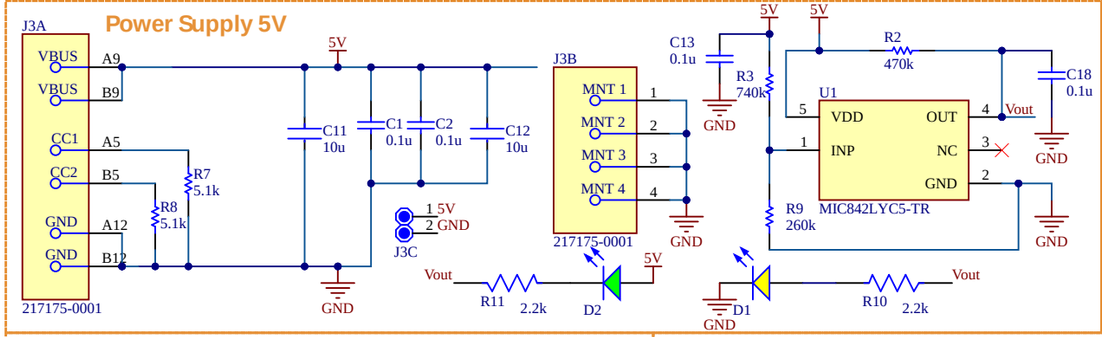

I2C Header

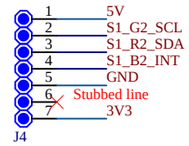

EEPROM

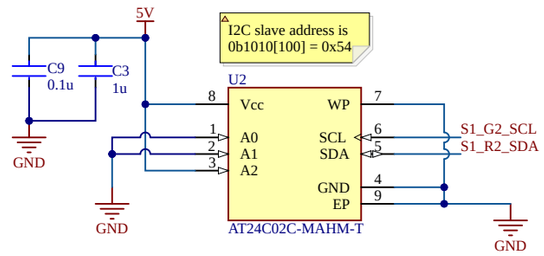

Out Connector

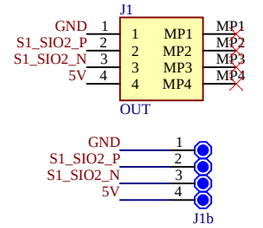

ESP32 GPIO

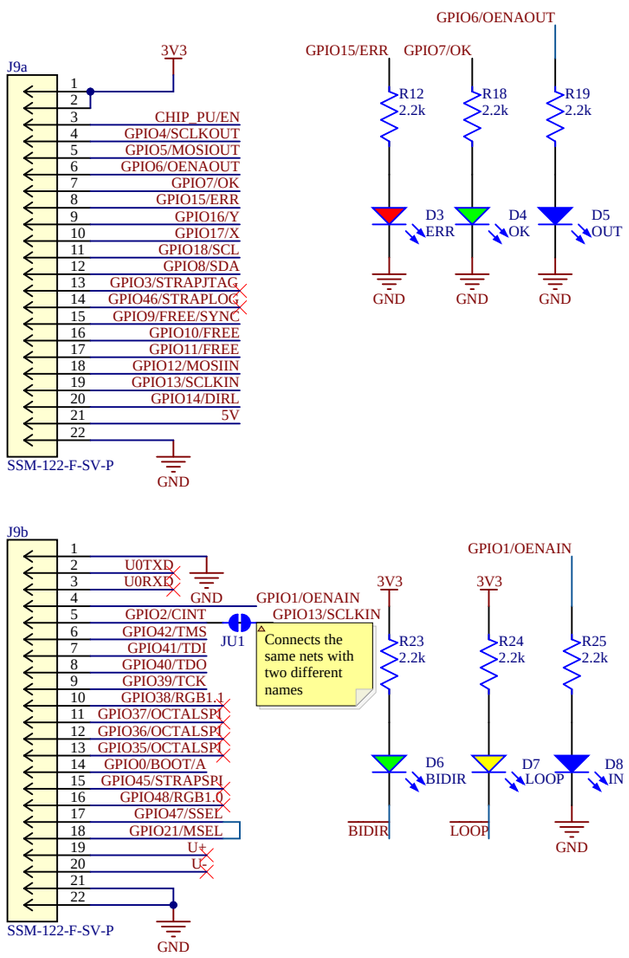

Level Shifters

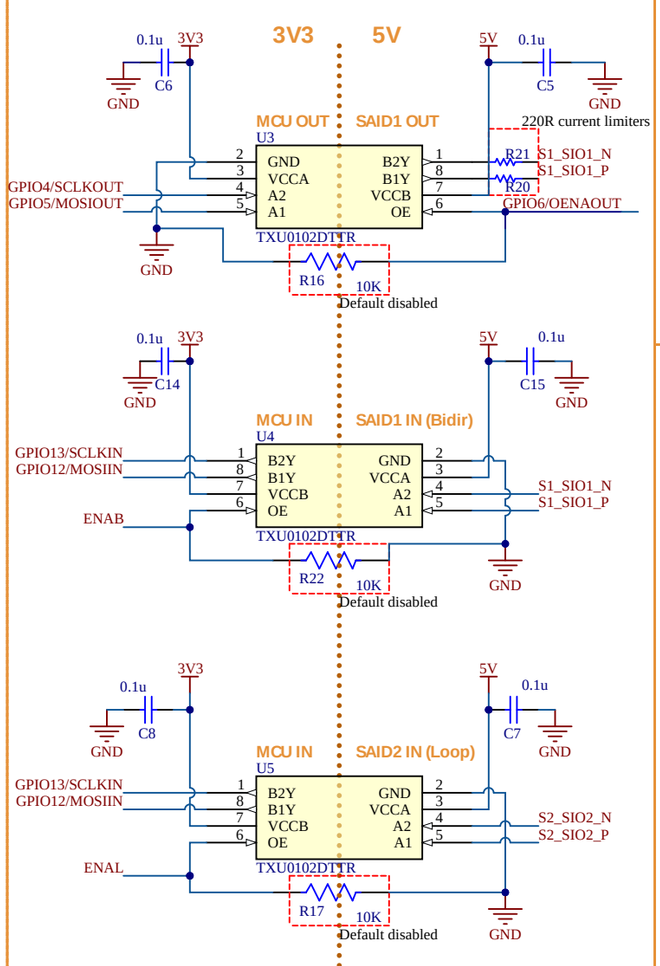

OLED Display

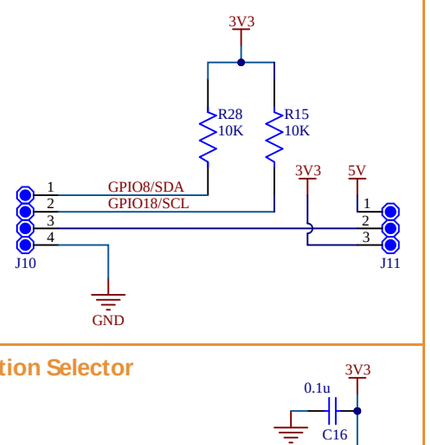

Direction Selector

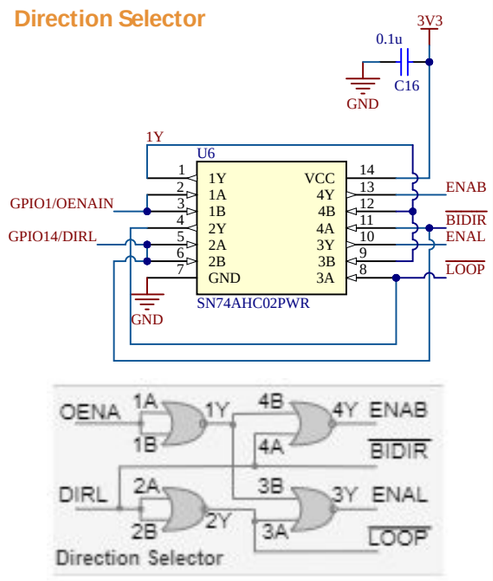

SAID S1 Out

OTP Configured for SPI+I2C

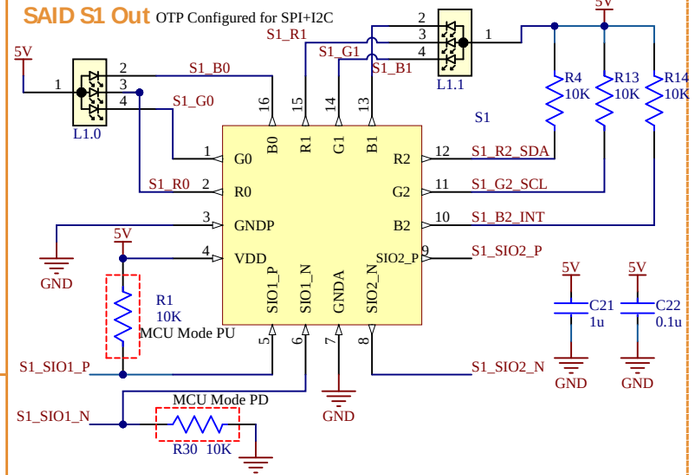

SAID S2 In

No special OTP

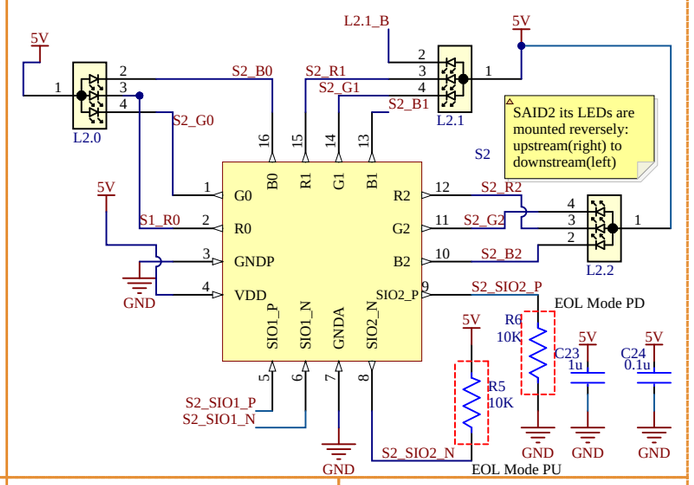

GPIO Buttons

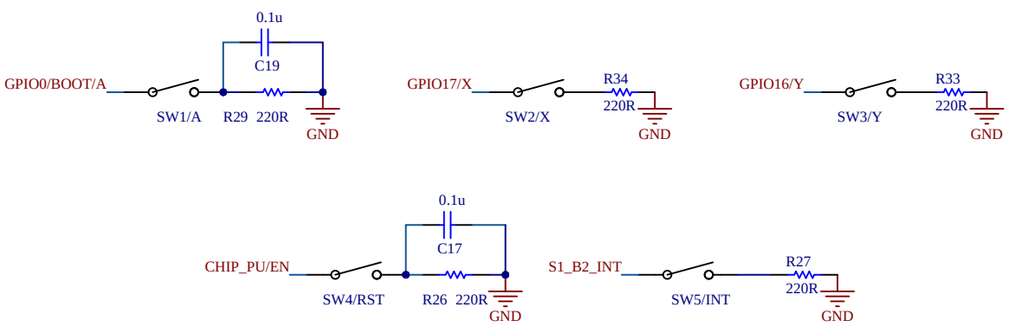

JTAG

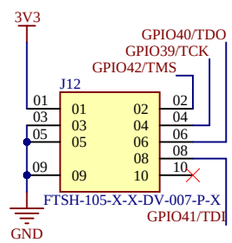

Debug pins

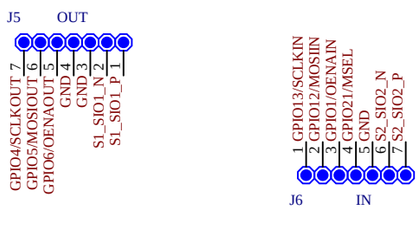

Defined State SPI IN

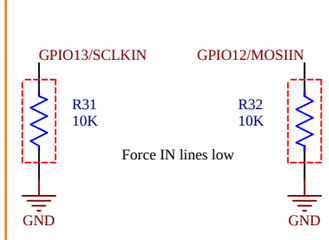

In Connector

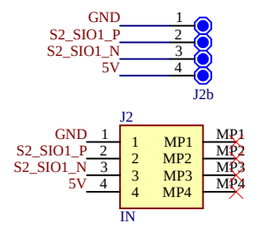

Free GPIOs

SYNC

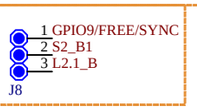

Project:	OSP32.PrjPcb		v10
Engineer:	ASA2		07/24
Page size:	A3	Sheet:	2 of 2

OSRAM

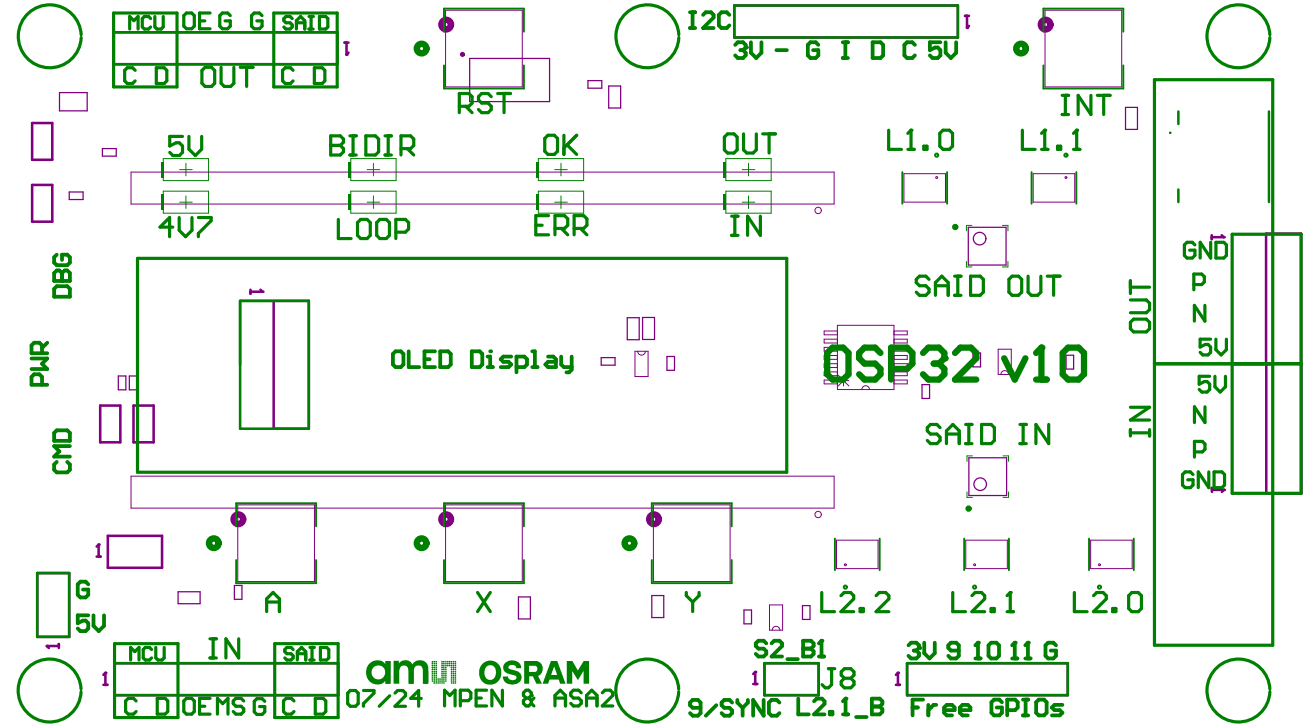
MCU
OE G G
SAID
C D
OUT
C D
RST
I2C
3V - G I D C 5V
INT
5V
BIDIR
OK
OUT
4V7
LOOP
ERR
IN
L1.0
L1.1
SAID OUT
DBG
PWR
CMD
OLED Display
OSP32 v10
SAID IN
OUT
GND
P
N
5V
IN
5V
N
P
GND
A
X
Y
L2.2
L2.1
L2.0
G
5V
MCU
IN
SAID
C D
OE MS G
C D
OSRAM
07/24 MPEN & ASA2
S2_B1
J8
9/SYNC L2.1_B
3V 9 10 11 G
Free GPIOs

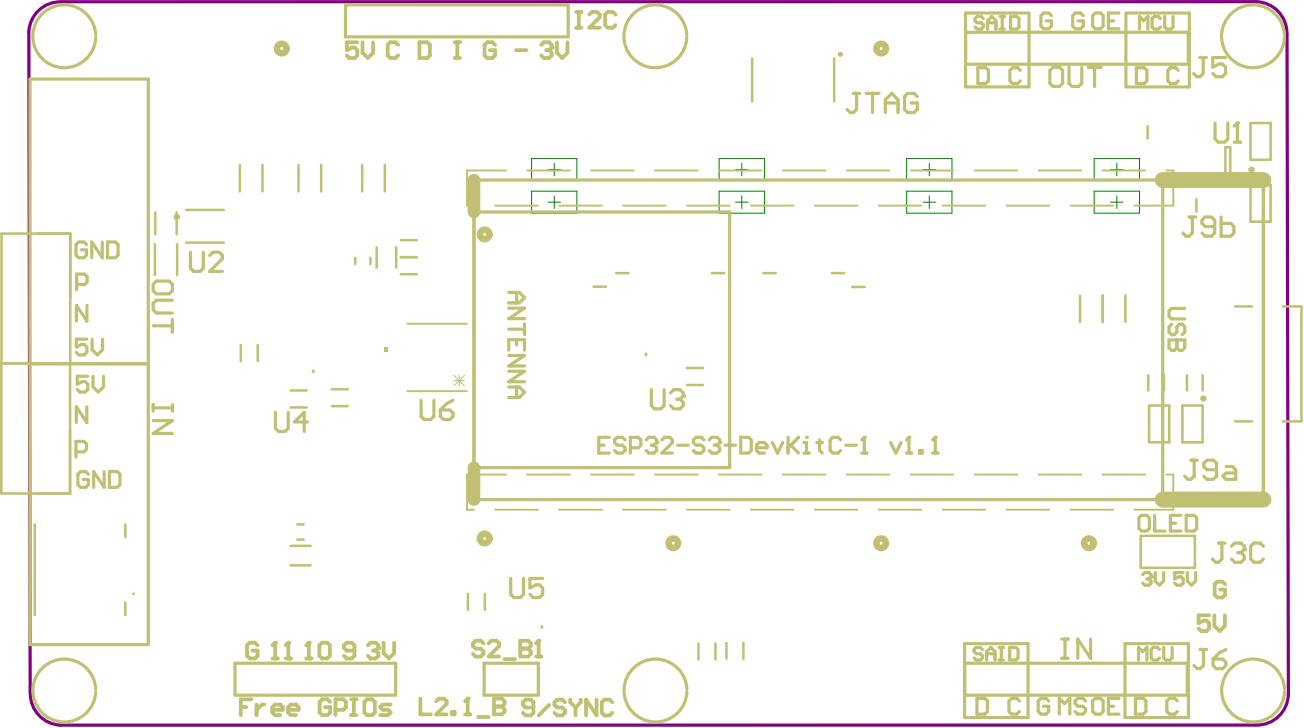
I2C
5V C D I G - 3V
JTAG
SAID G G OE MCU
D C OUT D C
J5
U1
J9b
GND
P
N
5V
OUT
U2
IN
5V
N
P
GND
ANTENNA
USB
U4
U6
U3
ESP32-S3-DevKitC-1 v1.1
J9a
OLED
J3C
3V 5V
G
5V
U5
G 11 10 9 3V
S2_B1
Free GPIOs L2.1_B 9/SYNC
SAID IN MCU
D C G MSOE D C
J6

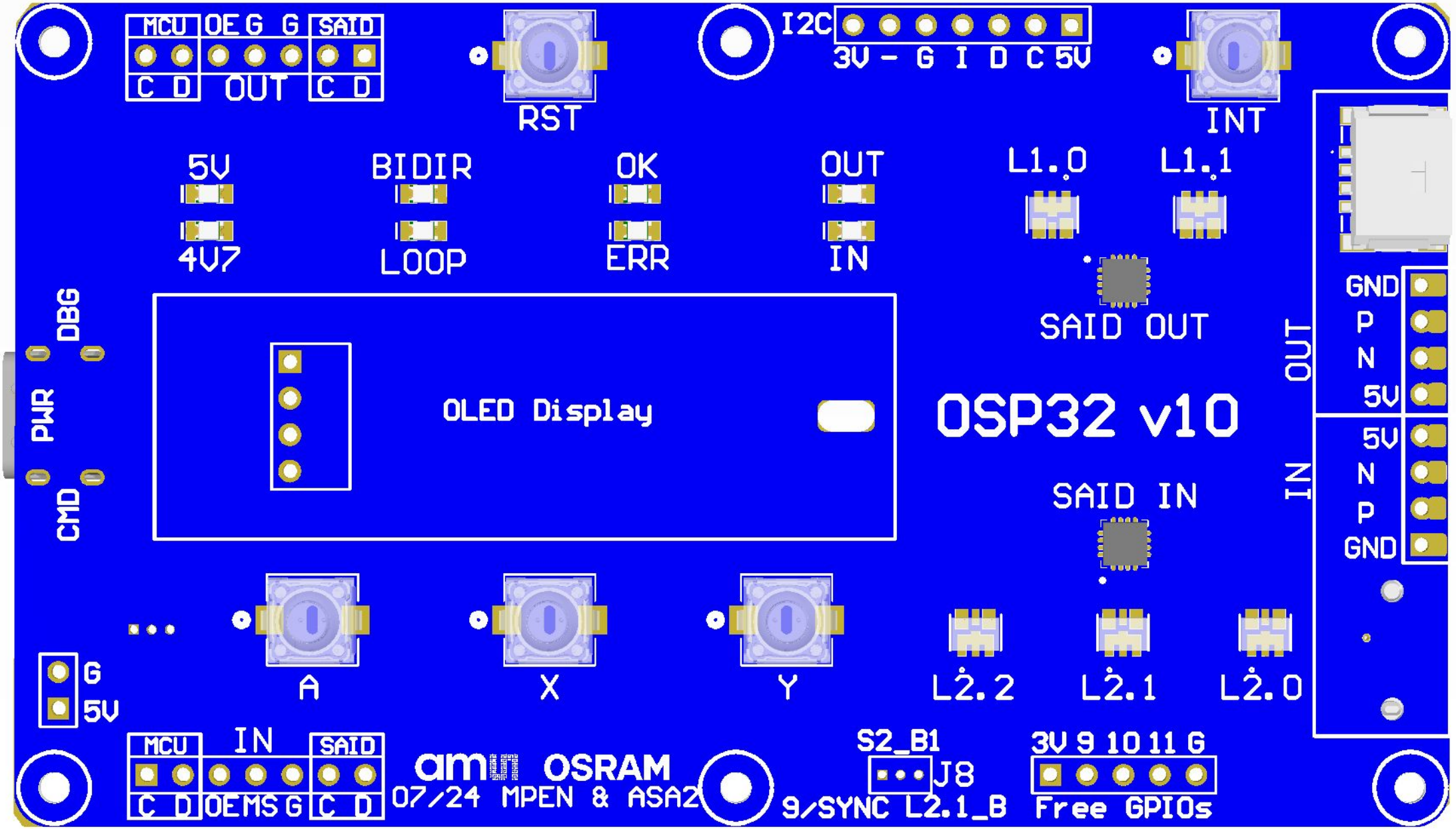
MCU
OE G G
SAID
C D
OUT
C D
RST
I2C
3V - G I D C 5V
INT
5V
BIDIR
OK
OUT
L1.0
L1.1
4V7
LOOP
ERR
IN
SAID OUT
GND
P
N
5V
OUT
DBG
PWR
CMD
OLED Display
OSP32 v10
5V
N
P
GND
IN
SAID IN
A
X
Y
L2.2
L2.1
L2.0
G
5V
MCU
IN
SAID
C D
OE MS G
C D
OSRAM
07/24 MPEN & ASA2
S2_B1
J8
9/SYNC L2.1_B
3V 9 10 11 G
Free GPIOs

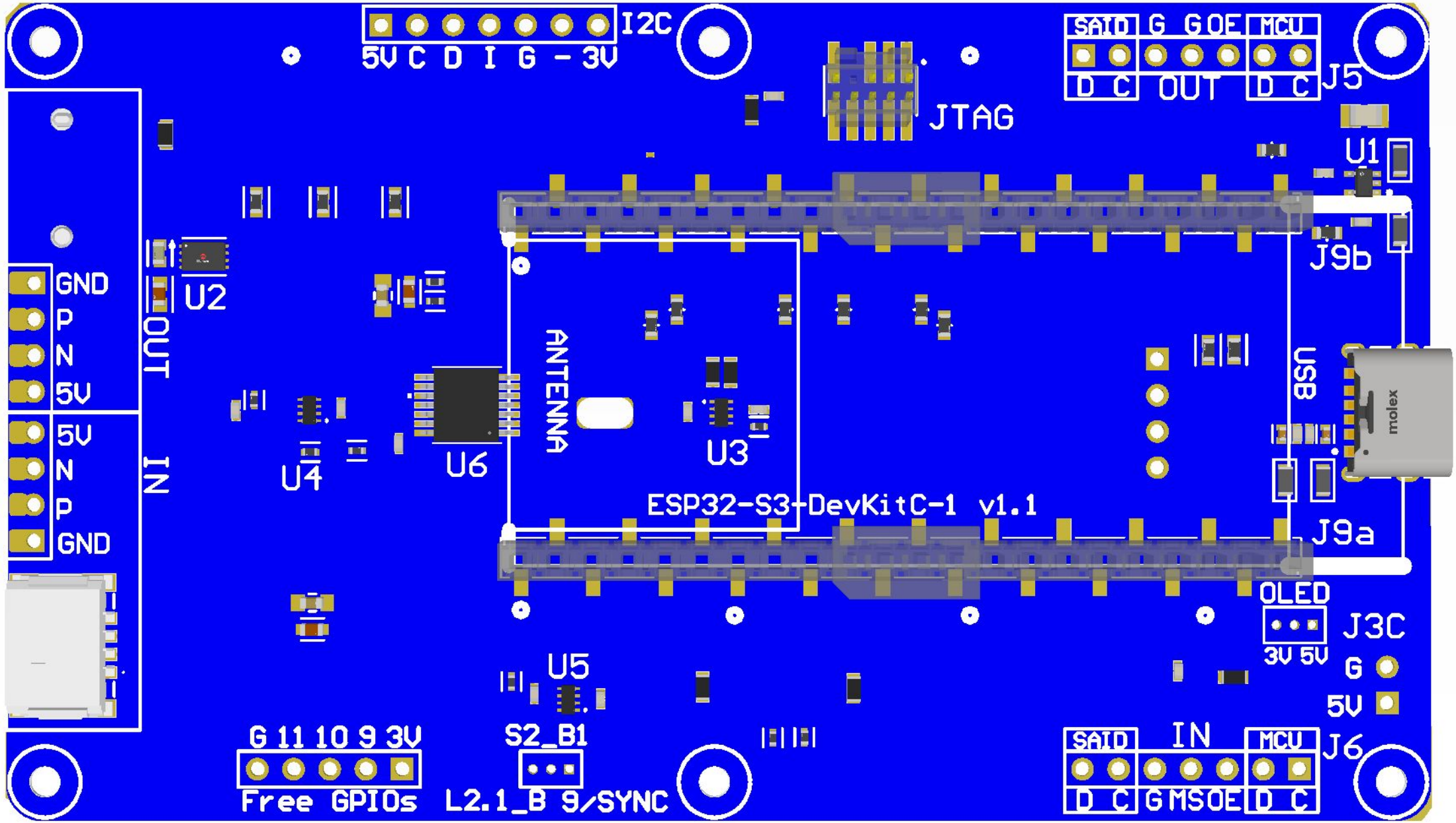
I2C
5V C D I G - 3V
JTAG
SAID G GOE MCU
D C OUT D C
J5
U1
J9b
GND
P
N
5V
OUT
U2
ANTENNA
U3
U4
U6
USB
molex
5V
N
P
GND
IN
ESP32-S3-DevKitC-1 v1.1
J9a
OLED
3V 5V
J3C
G
5V
U5
G 11 10 9 3V
S2_B1
Free GPIOs
L2.1_B 9/SYNC
SAID IN MCU
D C G MSOE D C
J6

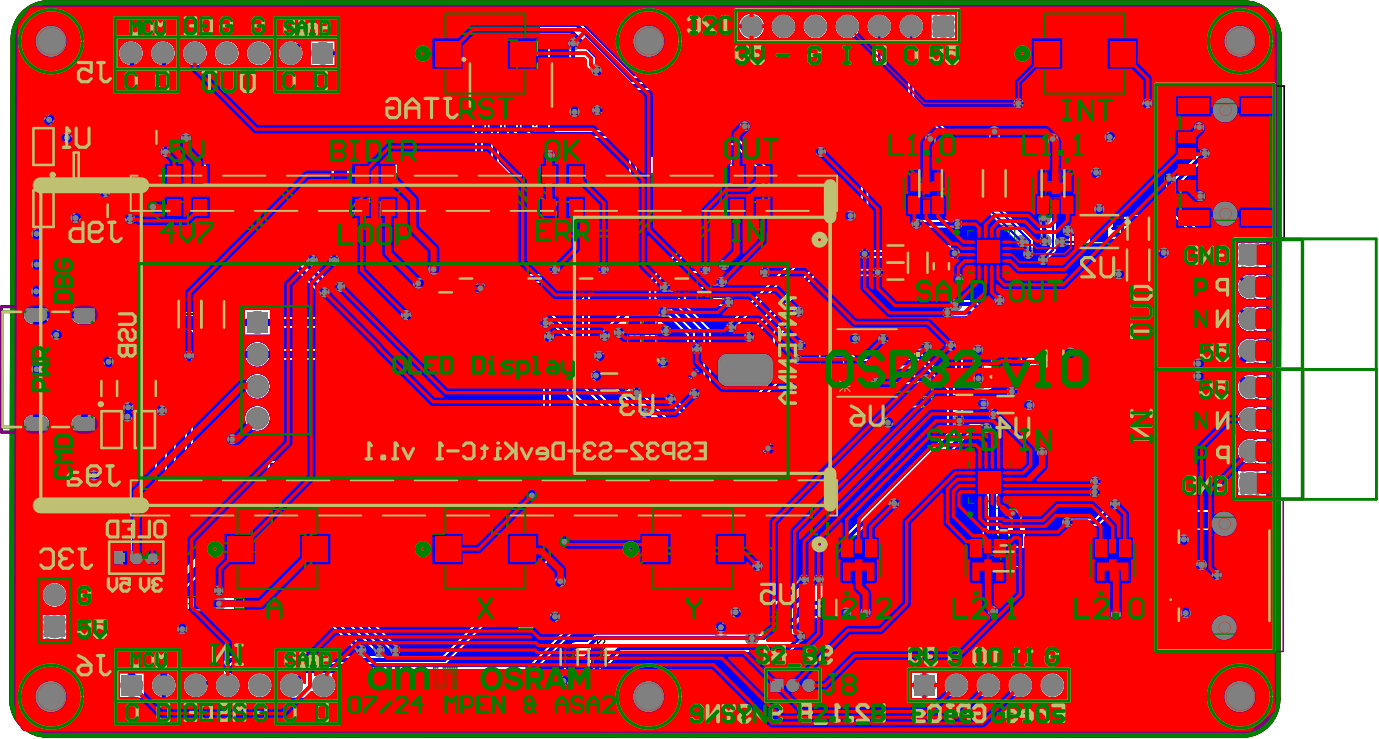
OSP32 v10
OLED Display
ESP32-S3-DevKitC-1 v1.1
QUALITY OSRAM
KP/24 MPEN & ASAP
INT
GND
P
N
OUT
IN
A
X
Y
L2.0
L2.1
L2.2
L1.0
L1.1
L1.2
OLED
3V 5V
MOV
SAT
GND

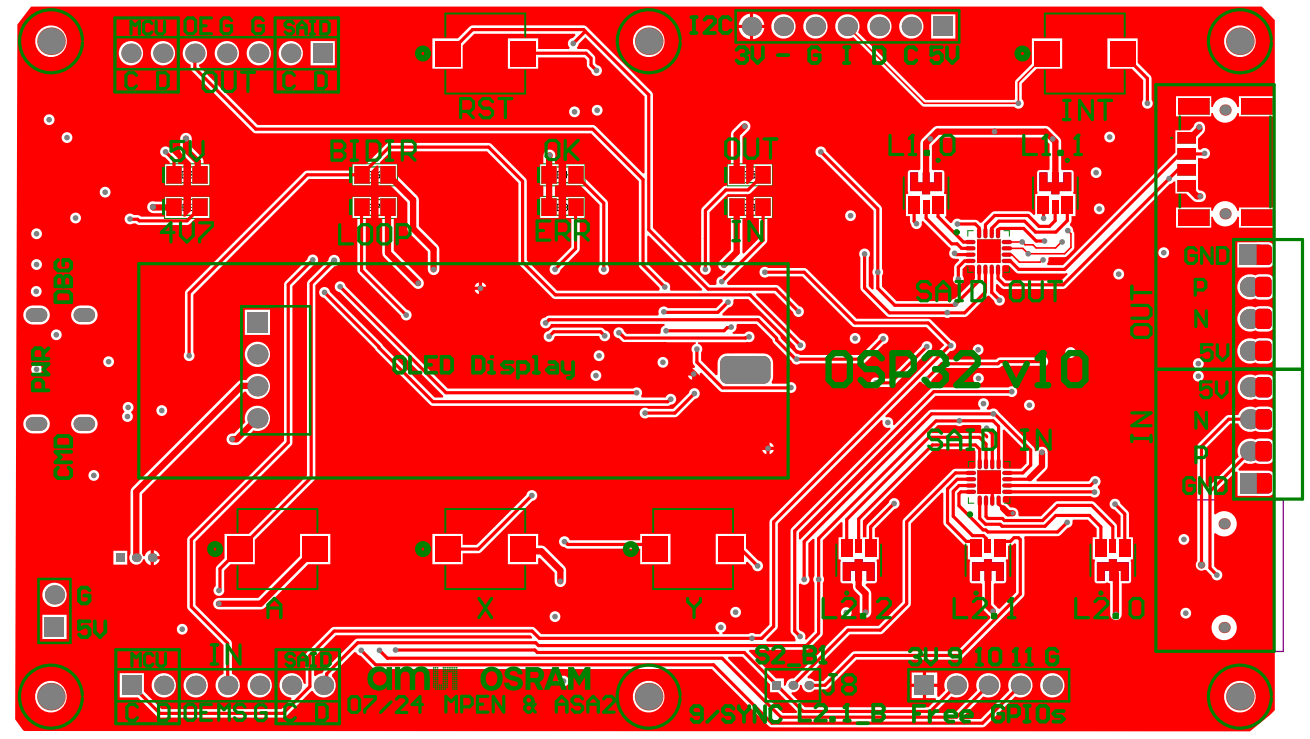

MCU
OE.G 9/GRC
OUT
RST
I2C
3V - G 1 V/C 5V
INT
SIO
BIDIR
CK
OUT
L1.0
L1.1
VCP
LOOP
CMP
IN
SAT
OUT
GND
P
N
OUT
IN
OLED Display
OSP32 v10
SAT
IN
A
X
Y
L2.2
L2.1
L2.0
G
5V
MCU
IN
GRC
CMIUT OSRAM
KP/24 MPEN 8 ASAS
S2.8
S2.9
3V 5 10 11 6
9/SYNC
L2.1 B
Free GPIOs

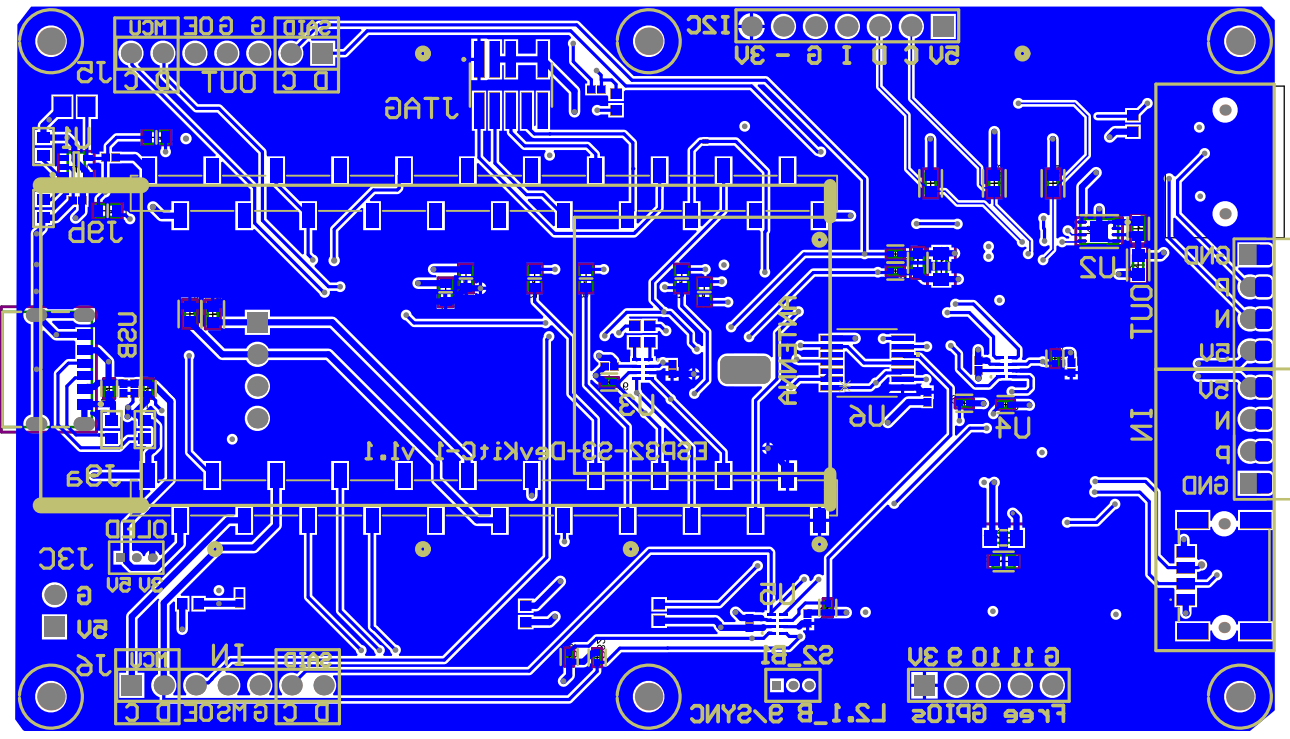
J5
J6
J8
J9
J10
J11
J12
J13
J14
J15
J16
J17
J18
J19
J20
J21
J22
J23
J24
J25
J26
J27
J28
J29
J30
J31
J32
J33
J34
J35
J36
J37
J38
J39
J40
J41
J42
J43
J44
J45
J46
J47