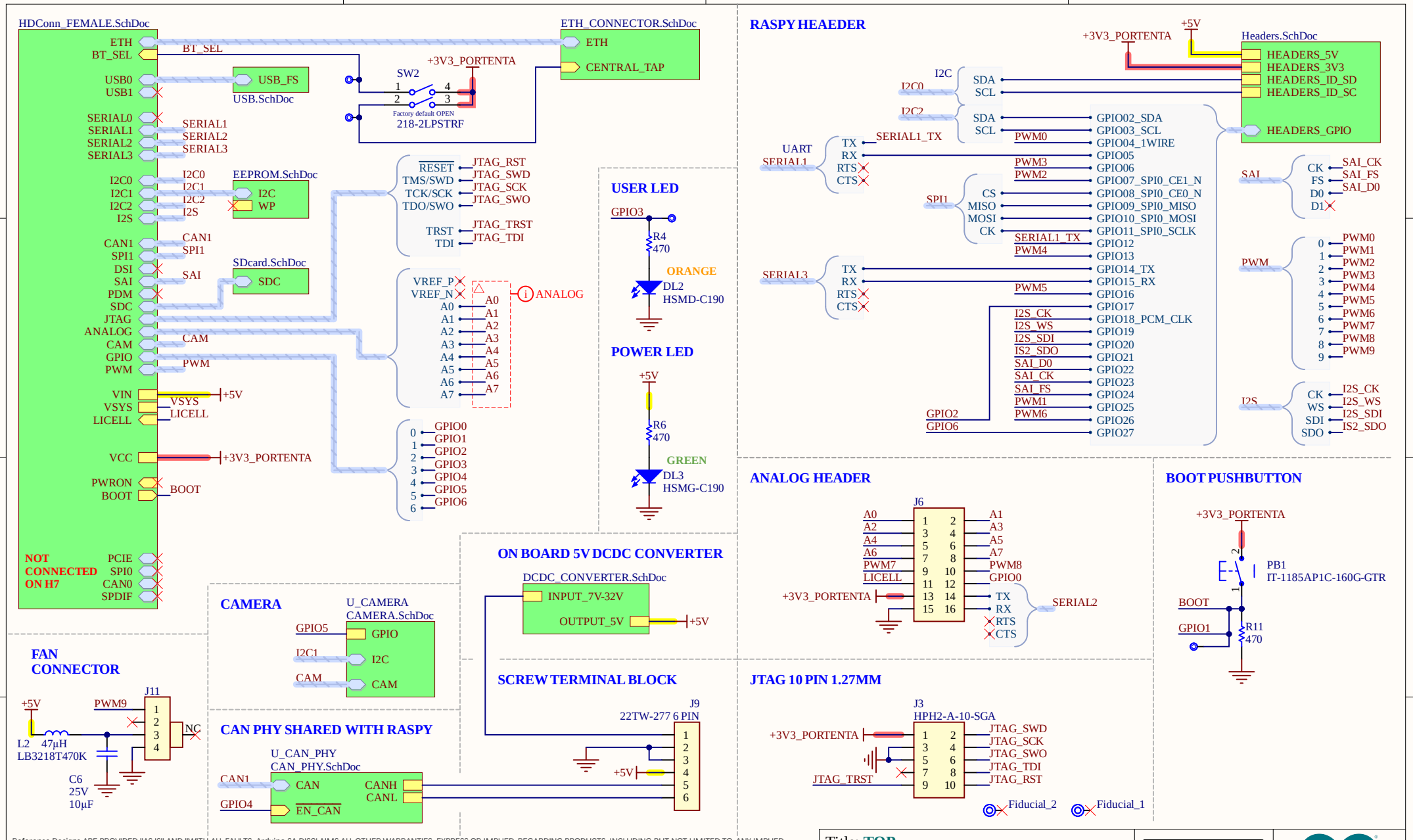

Reference Designs ARE PROVIDED "AS IS" AND "WITH ALL FAULTS. Arduino SA DISCLAIMS ALL OTHER WARRANTIES, EXPRESS OR IMPLIED, REGARDING PRODUCTS, INCLUDING BUT NOT LIMITED TO, ANY IMPLIED WARRANTIES OF MERCHANTABILITY OR FITNESS FOR A PARTICULAR PURPOSE.
Arduino SA may make changes to specifications and product descriptions at any time, without notice. The Customer must not rely on the absence or characteristics of any features or instructions marked "reserved" or "undefined". Arduino SA reserves these for future definition and shall have no responsibility whatsoever for conflicts or incompatibilities arising from future changes to them. The product information on the Web Site or Materials is subject to change without notice.
Do not finalize a design with this info. ARDUINO and other Arduino brands and logos and Trademarks of Arduino SA. All Arduino SA Trademarks cannot be used without owner's formal permission.

Title: TOP			
ID: ASX00049	Version: V1.1		
Date: 05/06/2024 Time: 14:49:26	Sheet 1 of 10		
File: TOP.SchDoc	Author: Silvio Navaretti	RevAuthor: Silvio Navaretti	

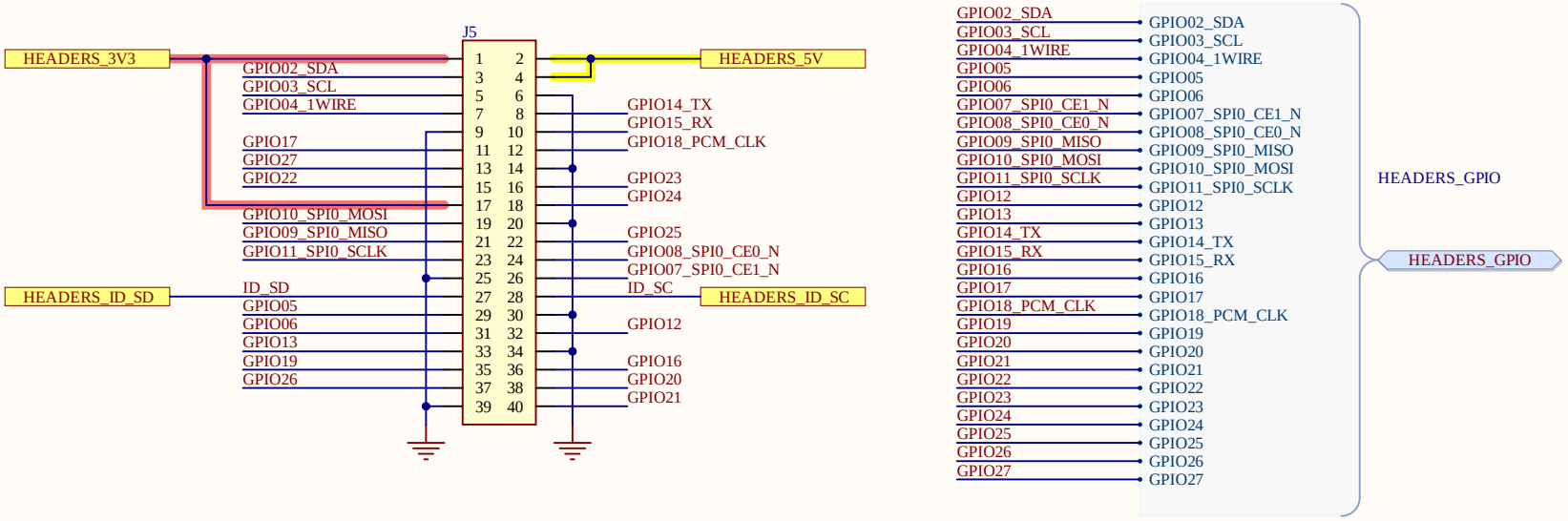

Reference Designs ARE PROVIDED "AS IS" AND "WITH ALL FAULTS. Arduino SA DISCLAIMS ALL OTHER WARRANTIES, EXPRESS OR IMPLIED, REGARDING PRODUCTS, INCLUDING BUT NOT LIMITED TO, ANY IMPLIED WARRANTIES OF MERCHANTABILITY OR FITNESS FOR A PARTICULAR PURPOSE.
Arduino SA may make changes to specifications and product descriptions at any time, without notice. The Customer must not rely on the absence or characteristics of any features or instructions marked "reserved" or "undefined". Arduino SA reserves these for future definition and shall have no responsibility whatsoever for conflicts or incompatibilities arising from future changes to them. The product information on the Web Site or Materials is subject to change without notice.
Do not finalize a design with this info. ARDUINO and other Arduino brands and logos and Trademarks of Arduino SA. All Arduino SA Trademarks cannot be used without owner's formal permission.

Title: **RASP HEADERS**			
ID: ASX00049	Version: V1.1		
Date: 05/06/2024 Time: 14:49:27	Sheet 2 of 10		
File: Headers.SchDoc	Author: Silvio Navaretti	RevAuthor: Silvio Navaretti	

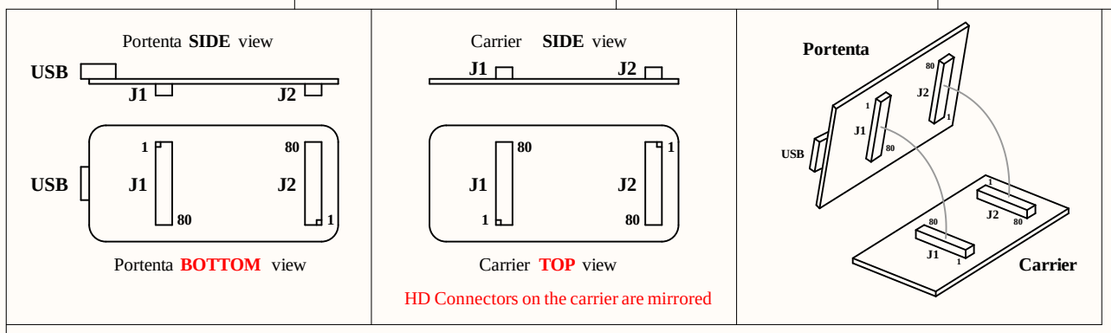

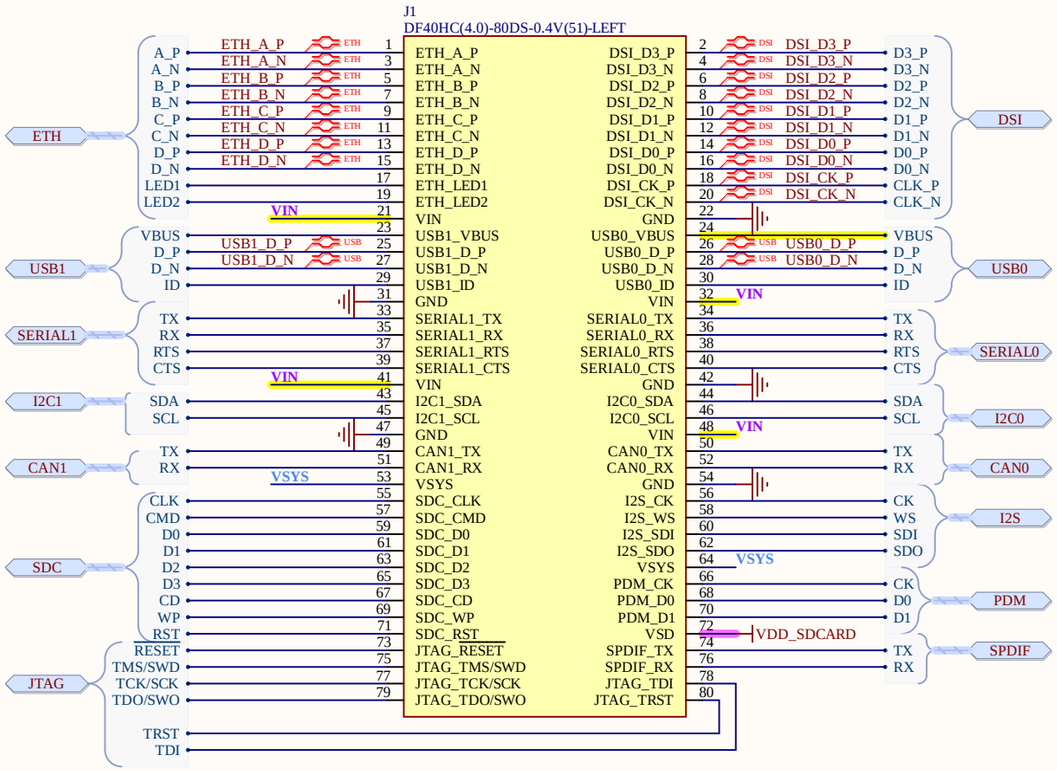

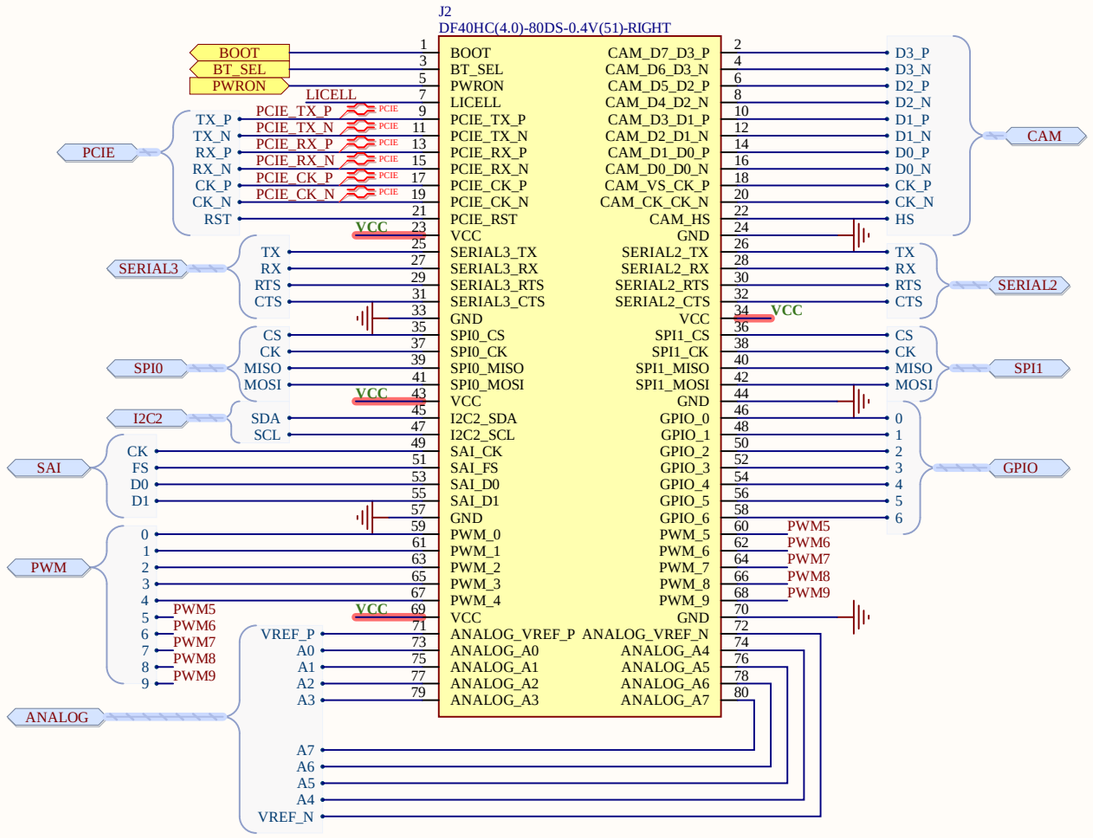

SHARED PINS TABLE

NET	BUS 1	BUS 2
PB3	JTAG	SDC2
PH11	CAM	I2C4
PH12	CAM	I2C4
PI5	CAM	SAI2A
PI6	CAM	SAI2A
PI7	CAM	SAI2A
PA4	CAM	ANALOG
PA6	CAM	ANALOG
PC2	ANALOG	SPI2
PC3	ANALOG	SPI2

POWER NETS TABLE

NET	TYPE	RANGES	DESCRIPTION
VIN	**PORTENTA INPUT**	4.1V to 6V.	Default 3.3V, PMIC (U10) programmable output.
VCC	***PORTENTA OUTPUT***	1.1V to 3.3V in steps, max 1A.	Default 3.3V, PMIC (U10) programmable output.
VSYS	***PORTENTA RESERVED OUTPUT***	**RESERVED, DO NOT USE** 3.5V to 4.2V, max 600mA.	Default 4.2V, PMIC (U10) programmable output which is also the input voltage of the bucks inside the PMIC itself.
LICELL	**PORTENTA INPUT**	Coinc cell max 3.6V, max 46uA.	Max 4uA with PMIC (U10) in coin cell mode, max 46uA with PMIC in standby/suspend mode.

Reference Designs ARE PROVIDED "AS IS" AND "WITH ALL FAULTS. Arduino SA DISCLAIMS ALL OTHER WARRANTIES, EXPRESS OR IMPLIED, REGARDING PRODUCTS, INCLUDING BUT NOT LIMITED TO, ANY IMPLIED WARRANTIES OF MERCHANTABILITY OR FITNESS FOR A PARTICULA R PURPOSE.
Arduino SA may make changes to specifications and product descriptions at any time, without notice. The Customer must not rely on the absence or characteristics of any features or instructions marked "reserved" or "undefined".
Arduino SA reserves these for future definition and shall have no responsibility whatsoever for conflicts or incompatibilities arising from future changes to them. The product information on the Web Site or Materials is subject to change without notice.
Do not finalize a design with this info. ARDUINO and other Arduino brands and logos and Trademarks of Arduino SA. All Arduino SA Trademarks cannot be used without owner's formal permission.

Title: **HD Connectors female**			
ID: ASX00049	Version: V1.1		
Date: 05/06/2024 Time: 14:49:28	Sheet 3 of 10		
File: HDConn_FEMALE.SchDoc	Author: Silvio Navaretti	RevAuthor:	

5V STEP DOWN
VIN MAX 32V
MAX OUT CURRENT 1.5A
REVERSE POLARITY PROTECTION

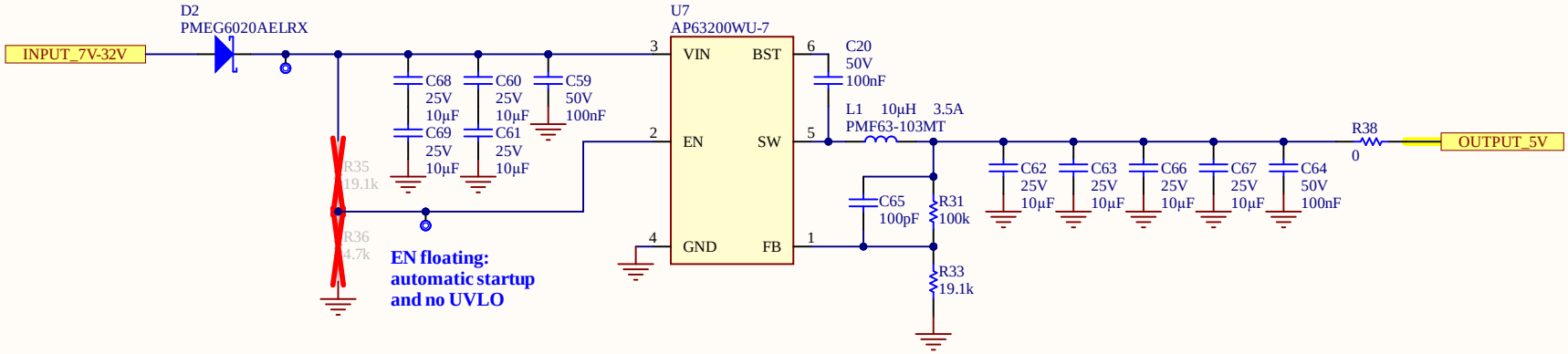

Reference Designs ARE PROVIDED "AS IS" AND "WITH ALL FAULTS. Arduino SA DISCLAIMS ALL OTHER WARRANTIES, EXPRESS OR IMPLIED, REGARDING PRODUCTS, INCLUDING BUT NOT LIMITED TO, ANY IMPLIED WARRANTIES OF MERCHANTABILITY OR FITNESS FOR A PARTICULAR PURPOSE.
Arduino SA may make changes to specifications and product descriptions at any time, without notice. The Customer must not rely on the absence or characteristics of any features or instructions marked "reserved" or "undefined". Arduino SA reserves these for future definition and shall have no responsibility whatsoever for conflicts or incompatibilities arising from future changes to them. The product information on the Web Site or Materials is subject to change without notice.
Do not finalize a design with this info. ARDUINO and other Arduino brands and logos and Trademarks of Arduino SA. All Arduino SA Trademarks cannot be used without owner's formal permission.

Title: POWER EXTERNAL			
ID: ASX00049	Version: V1.1		
Date: 05/06/2024 Time: 14:49:29	Sheet 4 of 10		
File: DCDC_CONVERTER.SchDoc	Author: Silvio Navaretti	RevAuthor: Silvio Navaretti	

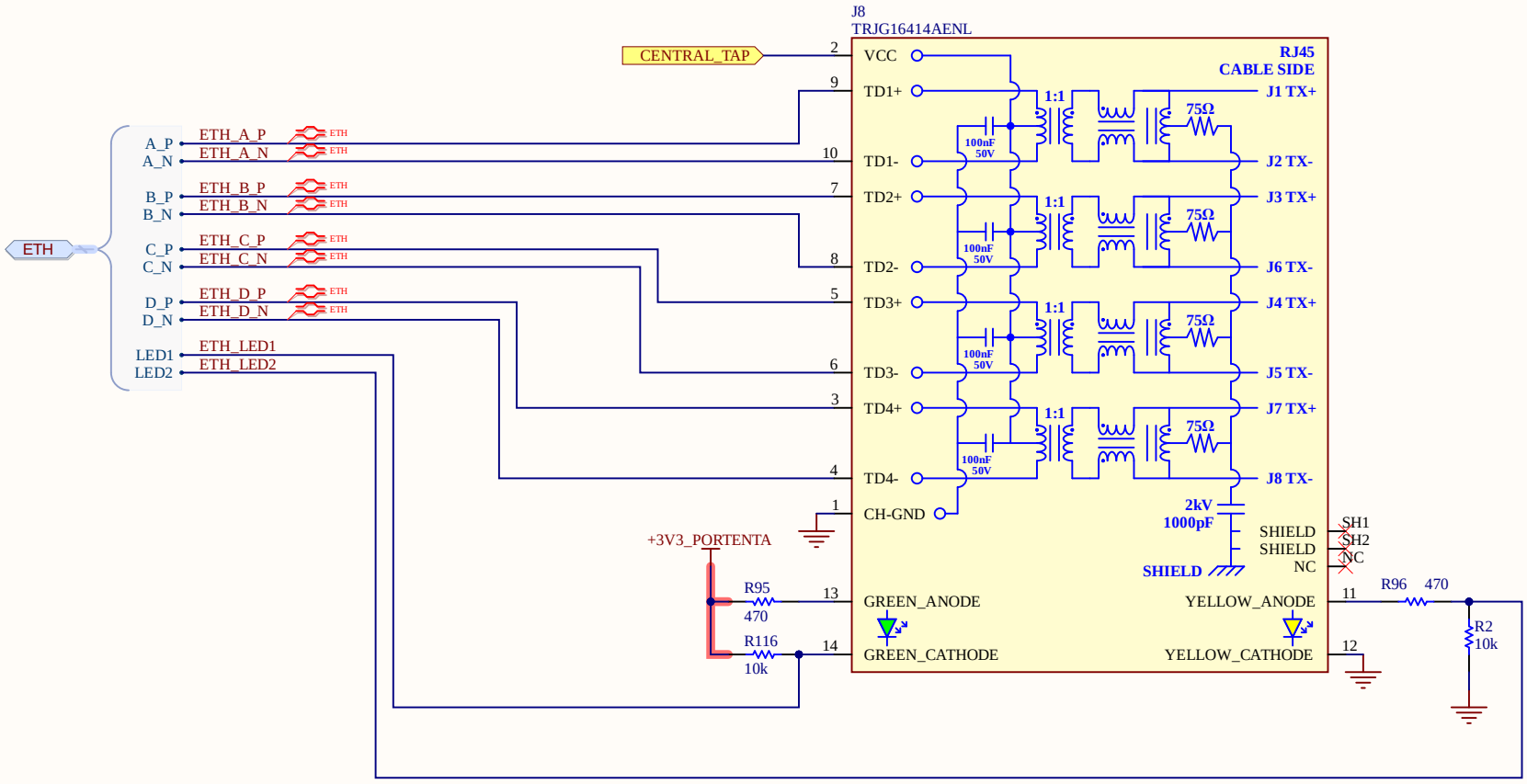

Reference Designs ARE PROVIDED "AS IS" AND "WITH ALL FAULTS. Arduino SA DISCLAIMS ALL OTHER WARRANTIES, EXPRESS OR IMPLIED, REGARDING PRODUCTS, INCLUDING BUT NOT LIMITED TO, ANY IMPLIED WARRANTIES OF MERCHANTABILITY OR FITNESS FOR A PARTICULAR PURPOSE.
Arduino SA may make changes to specifications and product descriptions at any time, without notice. The Customer must not rely on the absence or characteristics of any features or instructions marked "reserved" or "undefined". Arduino SA reserves these for future definition and shall have no responsibility whatsoever for conflicts or incompatibilities arising from future changes to them. The product information on the Web Site or Materials is subject to change without notice.
Do not finalize a design with this info. ARDUINO and other Arduino brands and logos and Trademarks of Arduino SA. All Arduino SA Trademarks cannot be used without owner's formal permission.

Title: **ETHERNET**			
ID: ASX00049	Version: V1.1		
Date: 05/06/2024 Time: 14:49:31	Sheet 5 of 10		
File: ETH_CONNECTOR.SchDoc	Author: Silvio Navaretti	RevAuthor: Silvio Navaretti	

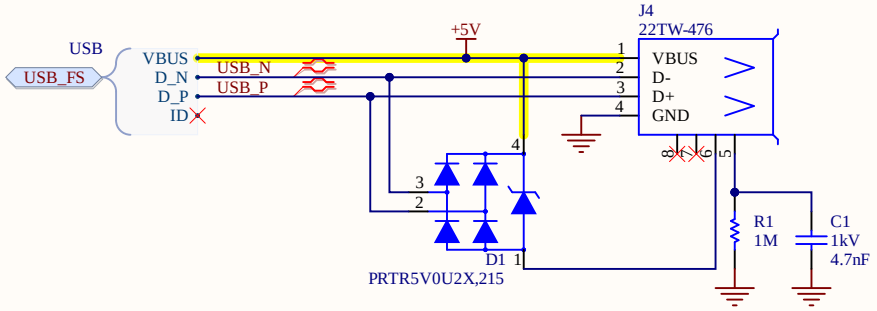

Reference Designs ARE PROVIDED "AS IS" AND "WITH ALL FAULTS. Arduino SA DISCLAIMS ALL OTHER WARRANTIES, EXPRESS OR IMPLIED, REGARDING PRODUCTS, INCLUDING BUT NOT LIMITED TO, ANY IMPLIED WARRANTIES OF MERCHANTABILITY OR FITNESS FOR A PARTICULAR PURPOSE.
Arduino SA may make changes to specifications and product descriptions at any time, without notice. The Customer must not rely on the absence or characteristics of any features or instructions marked "reserved" or "undefined". Arduino SA reserves these for future definition and shall have no responsibility whatsoever for conflicts or incompatibilities arising from future changes to them. The product information on the Web Site or Materials is subject to change without notice.
Do not finalize a design with this info. ARDUINO and other Arduino brands and logos and Trademarks of Arduino SA. All Arduino SA Trademarks cannot be used without owner's formal permission.

Title: **USB**			
ID: ASX00049	Version: V1.1		
Date: 05/06/2024 Time: 14:49:32	Sheet 6 of 10		
File: USB.SchDoc	Author: Silvio Navaretti	RevAuthor: Silvio Navaretti	

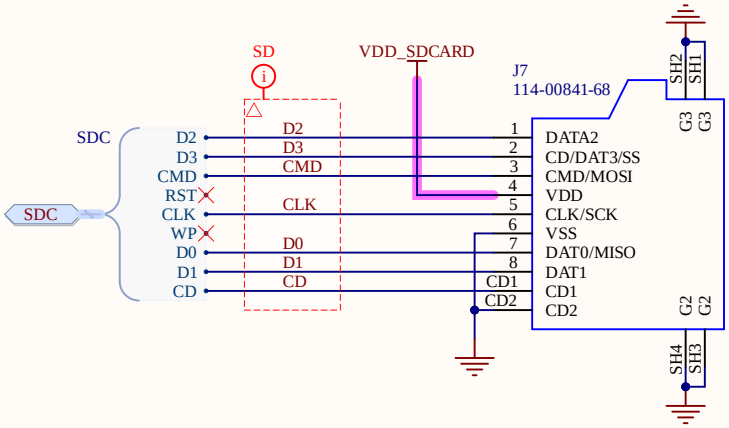

Reference Designs ARE PROVIDED "AS IS" AND "WITH ALL FAULTS. Arduino SA DISCLAIMS ALL OTHER WARRANTIES, EXPRESS OR IMPLIED, REGARDING PRODUCTS, INCLUDING BUT NOT LIMITED TO, ANY IMPLIED WARRANTIES OF MERCHANTABILITY OR FITNESS FOR A PARTICULAR PURPOSE.
Arduino SA may make changes to specifications and product descriptions at any time, without notice. The Customer must not rely on the absence or characteristics of any features or instructions marked "reserved" or "undefined". Arduino SA reserves these for future definition and shall have no responsibility whatsoever for conflicts or incompatibilities arising from future changes to them. The product information on the Web Site or Materials is subject to change without notice.
Do not finalize a design with this info. ARDUINO and other Arduino brands and logos and Trademarks of Arduino SA. All Arduino SA Trademarks cannot be used without owner's formal permission.

Title: **SD card**			
ID: ASX00049	Version: V1.1		
Date: 05/06/2024 Time: 14:49:34	Sheet 7 of 10		
File: SDcard.SchDoc	Author: Silvio Navaretti	RevAuthor: Silvio Navaretti	

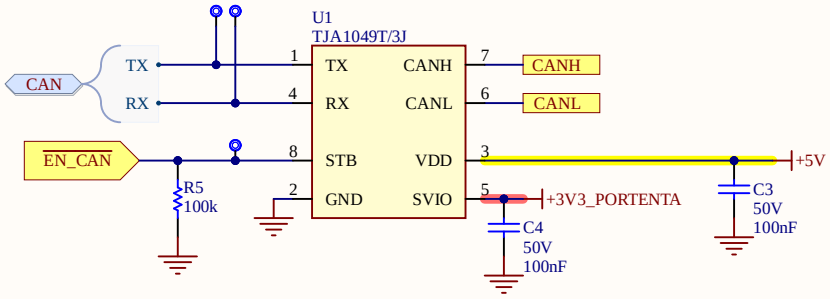

Reference Designs ARE PROVIDED "AS IS" AND "WITH ALL FAULTS. Arduino SA DISCLAIMS ALL OTHER WARRANTIES, EXPRESS OR IMPLIED, REGARDING PRODUCTS, INCLUDING BUT NOT LIMITED TO, ANY IMPLIED WARRANTIES OF MERCHANTABILITY OR FITNESS FOR A PARTICULAR PURPOSE.
Arduino SA may make changes to specifications and product descriptions at any time, without notice. The Customer must not rely on the absence or characteristics of any features or instructions marked "reserved" or "undefined". Arduino SA reserves these for future definition and shall have no responsibility whatsoever for conflicts or incompatibilities arising from future changes to them. The product information on the Web Site or Materials is subject to change without notice.
Do not finalize a design with this info. ARDUINO and other Arduino brands and logos and Trademarks of Arduino SA. All Arduino SA Trademarks cannot be used without owner's formal permission.

Title: **CAN PHY**			
ID: ASX00049	Version: V1.1		
Date: 05/06/2024 Time: 14:49:35	Sheet 8 of 10		
File: CAN_PHY.SchDoc	Author: Silvio Navaretti	RevAuthor: Silvio Navaretti	

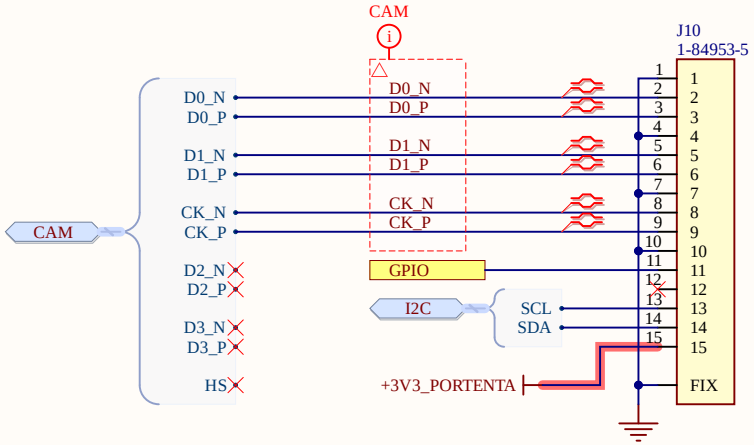

Reference Designs ARE PROVIDED "AS IS" AND "WITH ALL FAULTS. Arduino SA DISCLAIMS ALL OTHER WARRANTIES, EXPRESS OR IMPLIED, REGARDING PRODUCTS, INCLUDING BUT NOT LIMITED TO, ANY IMPLIED WARRANTIES OF MERCHANTABILITY OR FITNESS FOR A PARTICULAR PURPOSE.
Arduino SA may make changes to specifications and product descriptions at any time, without notice. The Customer must not rely on the absence or characteristics of any features or instructions marked "reserved" or "undefined". Arduino SA reserves these for future definition and shall have no responsibility whatsoever for conflicts or incompatibilities arising from future changes to them. The product information on the Web Site or Materials is subject to change without notice.
Do not finalize a design with this info. ARDUINO and other Arduino brands and logos and Trademarks of Arduino SA. All Arduino SA Trademarks cannot be used without owner's formal permission.

Title: **CAMERA**			
ID: ASX00049	Version: V1.1		
Date: 05/06/2024 Time: 14:49:37	Sheet 9 of 10		
File: CAMERA.SchDoc	Author: Silvio Navaretti	RevAuthor: Silvio Navaretti	

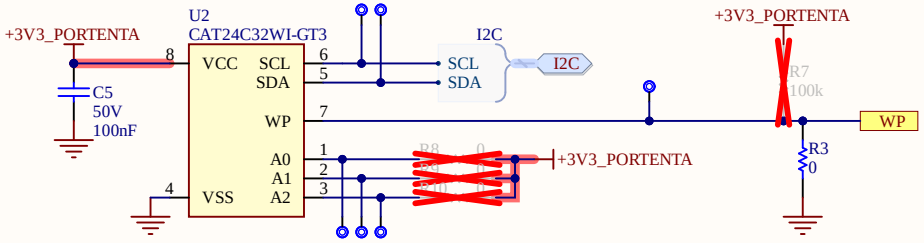

CAT24C32WI-GT3 address bits

1	0	1	0	A2	A1	A0	R/W

A2, A1, A0 can be pulled HIGH or LOW.
They have an internal pulldown.

Reference Designs ARE PROVIDED "AS IS" AND "WITH ALL FAULTS. Arduino SA DISCLAIMS ALL OTHER WARRANTIES, EXPRESS OR IMPLIED, REGARDING PRODUCTS, INCLUDING BUT NOT LIMITED TO, ANY IMPLIED WARRANTIES OF MERCHANTABILITY OR FITNESS FOR A PARTICULAR PURPOSE.
Arduino SA may make changes to specifications and product descriptions at any time, without notice. The Customer must not rely on the absence or characteristics of any features or instructions marked "reserved" or "undefined". Arduino SA reserves these for future definition and shall have no responsibility whatsoever for conflicts or incompatibilities arising from future changes to them. The product information on the Web Site or Materials is subject to change without notice.
Do not finalize a design with this info. ARDUINO and other Arduino brands and logos and Trademarks of Arduino SA. All Arduino SA Trademarks cannot be used without owner's formal permission.

Title: **EEPROM**			
ID: ASX00049	Version: V1.1		
Date: 05/06/2024 Time: 14:49:38	Sheet 10 of 10		
File: EEPROM.SchDoc	Author: Silvio Navaretti	RevAuthor: Silvio Navaretti	

This project's hardware is licensed under the Creative Commons Attribution-ShareAlike 4.0 International License. To view a copy of this license, visit https://creativecommons.org/licenses/by-sa/4.0/deed.en