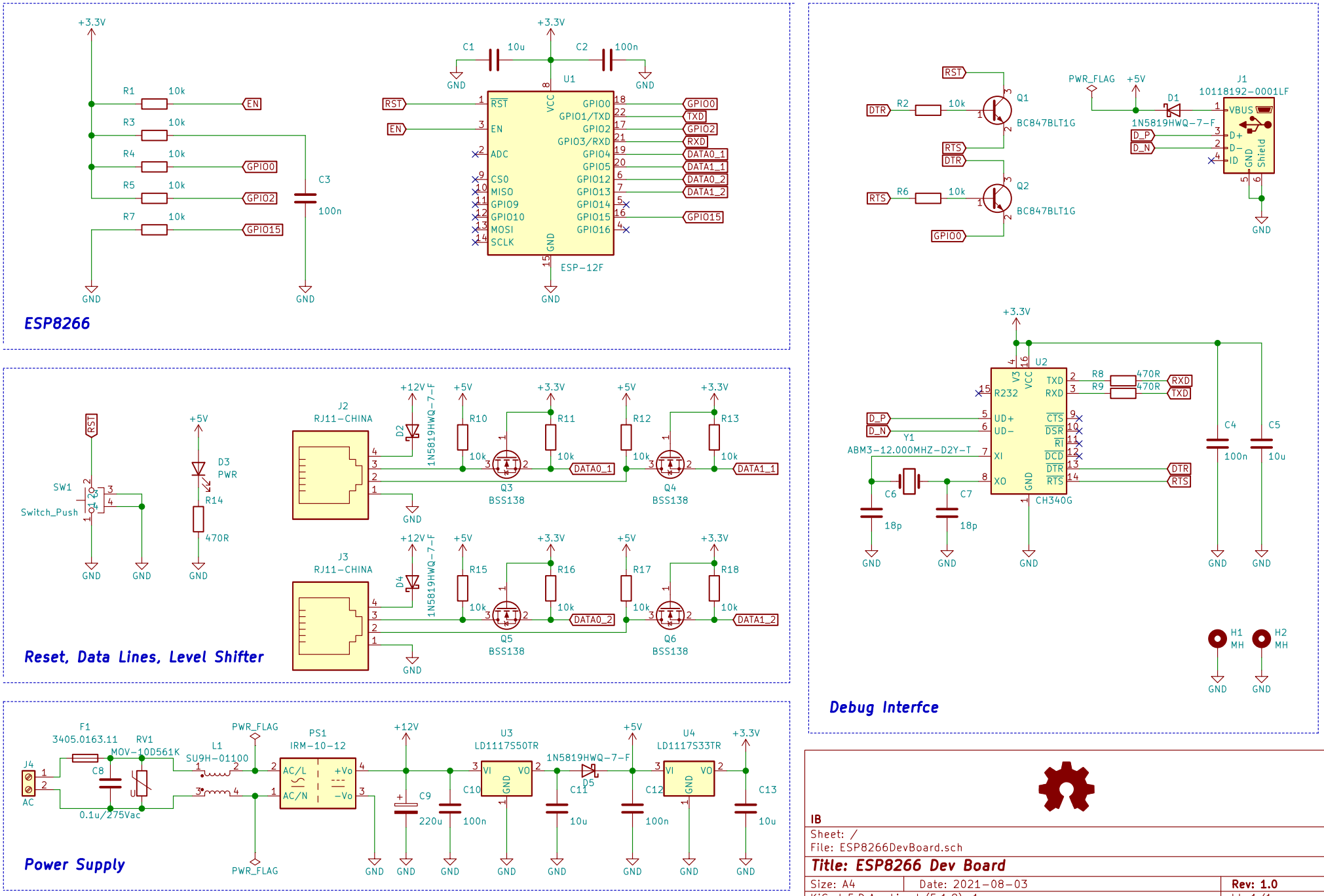
ESP8266
+3.3V
R1 10k EN
R3 10k
R4 10k GPIO0
R5 10k GPIO2
R7 10k GPIO15
C3 100n
GND
C1 10u
C2 100n
U1
ESP-12F
RST
EN
ADC
CS0
MISO
GPIO9
GPIO10
MOSI
SCLK
VCC
GND
GPIO0
GPIO1/TXD
GPIO2
GPIO3/RXD
GPIO4
GPIO5
GPIO12
GPIO13
GPIO14
GPIO15
GPIO16
TXD
RXD
DATA0_1
DATA1_1
DATA0_2
DATA1_2
Reset, Data Lines, Level Shifter
SW1
Switch_Push
+5V
D3
PWR
R14
470R
J2
RJ11-CHINA
J3
RJ11-CHINA
+12V
D2
D4
1N5819HWQ-7-F
R10
R11
R12
R13
R15
R16
R17
R18
10k
Q3
Q4
Q5
Q6
BSS138
Power Supply
F1
3405.0163.11
RV1
MOV-10D561K
J4
AC
C8
0.1u/275Vac
L1
SU9H-01100
PWR_FLAG
PS1
IRM-10-12
AC/L
AC/N
+Vo
-Vo
C9
220u
C10
100n
U3
LD1117S50TR
VI
VO
GND
1N5819HWQ-7-F
D5
C11
10u
C12
100n
U4
LD1117S33TR
C13
10u
Debug Interfce
DTR
R2 10k
Q1
BC847BLT1G
RTS
R6 10k
Q2
BC847BLT1G
GPIO0
PWR_FLAG
D1
1N5819HWQ-7-F
J1
10118192-0001LF
VBUS
D+
D-
ID
Shield
D_P
D_N
U2
CH340G
R232
V3
TXD
RXD
UD+
UD-
XI
XO
CTS
DSR
RI
DCD
DTR
RTS
R8 470R
R9 470R
Y1
ABM3-12.000MHZ-D2Y-T
C6 18p
C7 18p
C4 100n
C5 10u
H1
MH
H2
MH
IB
Sheet: /
File: ESP8266DevBoard.sch
Title: ESP8266 Dev Board
Size: A4
Date: 2021-08-03
Rev: 1.0
KiCad E.D.A. kicad (5.1.9)-1
Id: 1/1