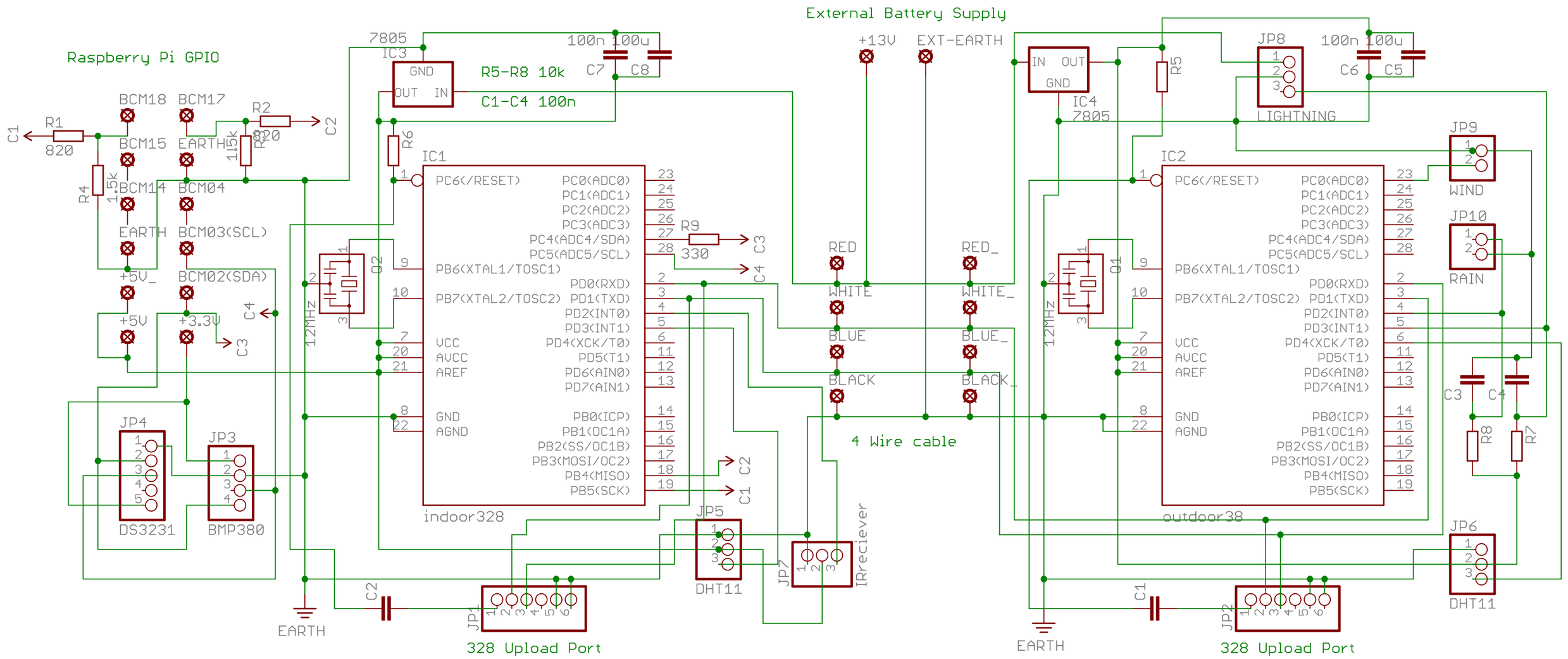

27/02/2020 11:35:58 AM f=1.50 F:\rasp-pi-weather\rasp-pi-weather-complete.sch (Sheet: 1/1)