SP8 BLOCK DIAGRAM

01

PCB STACK UP

Discrete 6L

LAYER 1 : TOP
LAYER 2 : SGND
LAYER 3 : IN1(High)
LAYER 4 : IN2(High)
LAYER 5 : SVCC
LAYER 6 : Bottom

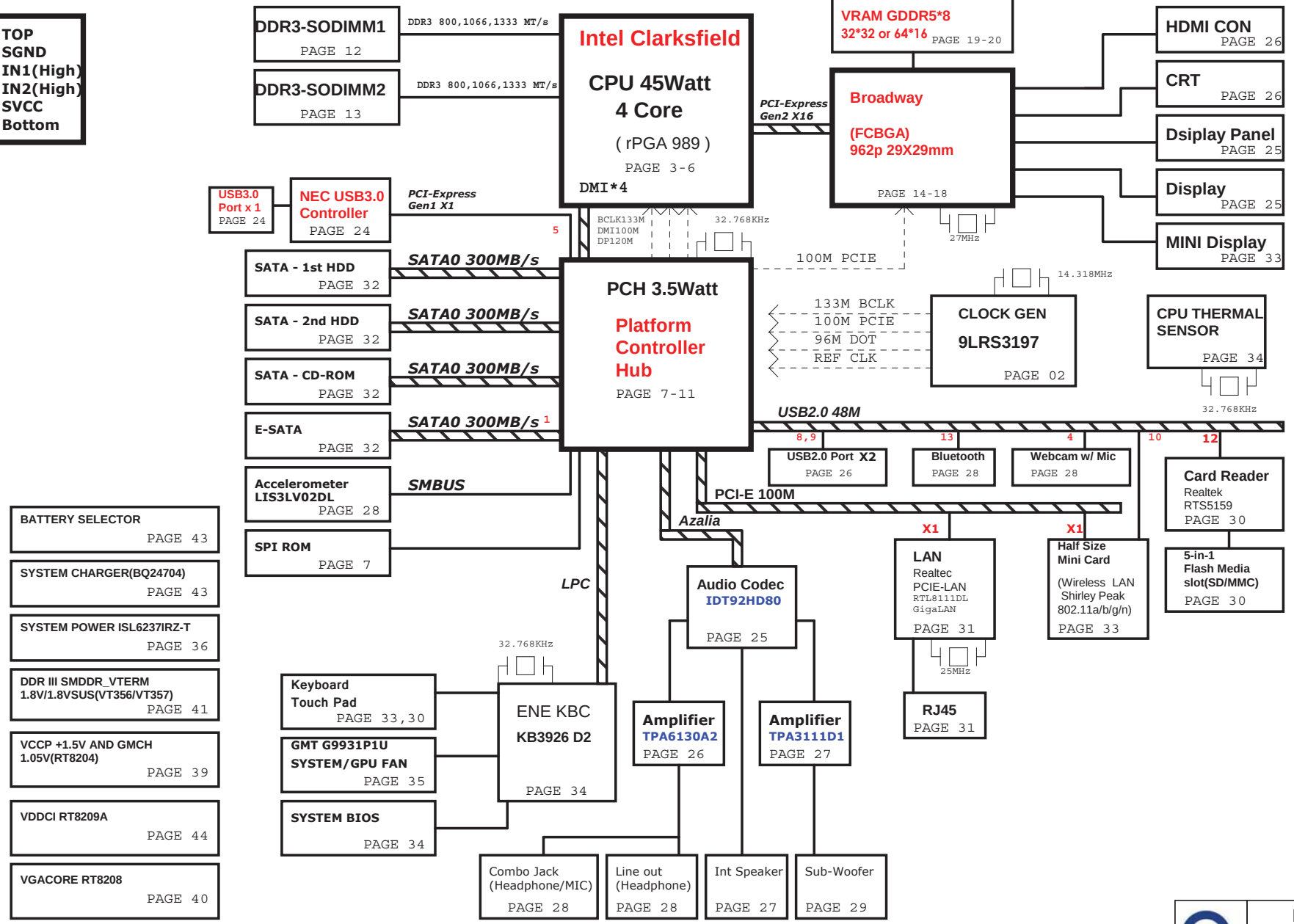

BATTERY SELECTOR PAGE 43

SYSTEM CHARGER(BQ24704) PAGE 43

SYSTEM POWER ISL6237IRZ-T PAGE 36

DDR III SMDDR_VTERM 1.8V/1.8VSUS(VT356/VT357) PAGE 41

VCCP +1.5V AND GMCH 1.05V(RT8204) PAGE 39

VDDCI RT8209A PAGE 44

VGACORE RT8208 PAGE 40

CPU CORE VT1312M/VT1317 PAGE 38

PROJECT : SP8
Quanta Computer Inc.

Size	Document Number	Rev
Custom	BLOCK DIAGRAM	3A

NB5/RD2

Date: Thursday, August 05, 2010 Sheet 1 of 47

http://laptop-motherboard-schematic.blogspot.com/

+1.05V 7,8,9,11,37,38
+1.5V 35,42
+3V 3,7,8,9,10,11,12,13,14,17,25,26,27,28,30,31,32,33,34,35,38,40,42

25mA
+1.05V +VDDIO_CLK
L57 HCB1608KF-181T15_6
C433 0.1U/10V_4
C815 0.1U/10V_4
C813 10U/6.3V_6S
C434 *10U/6.3V_8S
Place each 0.1uF cap close to pin

150mA
+3V +VDDSE_CLK
L29 HCB1608KF-181T15_6
C458 4.7U/6.3V_6
C447 0.1U/10V_4
C454 0.1U/10V_4
Place each 0.1uF cap close to pin

150mA
+3V +VDDCORE_CLK
L58 *HCB1608KF-181T15_6
+1.5V
L28 HCB1608KF-181T15_6
C418 4.7U/6.3V_6
C427 0.1U/10V_4
C453 0.1U/10V_4
C818 0.1U/10V_4
Place each 0.1uF cap close to pin

+VDDIO_CLK +VDDCORE_CLK
C479 0.1U/10V_4
C469 0.1U/10V_4

change to power saving
CLK need change to +1.5V
support

SI Add C479 and C469 for EMI request

+3V
R272 *10K/F_4
CPU_SEL
R270 10K/F_4

	0	1
CPU_SEL	CPU0/1=133MHz (default)	CPU0/1=100MHz

U17
9LRS3197
QFN32
RTM875N-632-VB-GRT

+VDDSE_CLK → VDD_LCD, VDD_REF
+VDDCORE_CLK → VDD_USB, VDD_SRC, VDD_CPU
+VDDIO_CLK → VDD_CPU_IO, VDD_SRC_IO
8,12,13,28 CGDAT_SMB, 8,12,13,28 CGCLK_SMB → SDATA, SCLK
+3V R261 10K/F_4, 8 CLK_ICH_14M R267 33_4 CPU_SEL → CPU_STOP#, REF_0/CPU_SEL
C451 *10P/50V_4
CK_PWRGD_R → CK_PWRGD/PD#_3.3
XTAL_OUT, XTAL_IN → XOUT, XIN
VSS_SATA, VSS_USB, VSS_LCD

CPU-0 CLK_BUF_BCLK_P_R
CPU-0# CLK_BUF_BCLK_N_R
CPU-1
CPU-1#
DOT96T_LPR CLK_BUF_DREFCLK_R
DOT96C_LPR CLK_BUF_DREFCLK#_R
SRC-1 CLK_BUF_PCIE_3GPLL_R
SRC-1# CLK_BUF_PCIE_3GPLL#_R
SATA CLK_BUF_DREFSSCLK_R
SATA# CLK_BUF_DREFSSCLK#_R
27MHz_nonSS CLK_VGA_27M_NOSS
27MHz_SS CLK_VGA_27M_SS
GND, VSS_REF, VSS_CPU, VSS_SRC

Place within 0.5" of C/G
RP2 4P2R-S-0 → CLK_BUF_BCLK_P 8, CLK_BUF_BCLK_N 8
RP6 4P2R-S-0 → CLK_BUF_DREFCLK 8, CLK_BUF_DREFCLK# 8
RP3 4P2R-S-0 → CLK_BUF_PCIE_3GPLL 8, CLK_BUF_PCIE_3GPLL# 8
RP5 4P2R-S-0 → CLK_BUF_DREFSSCLK 8, CLK_BUF_DREFSSCLK# 8
R273 33_4, R274 *33_4 → CLK_27M_NONSS 17
27Mhz SS/NOSS option.

Place R8044 within 0.5" of C/G

Y5 14.318MHZ
XTAL_IN C443 33P/50V_4
XTAL_OUT C438 33P/50V_4

+3V
R260 1K/F_4
CK_PWRGD_R
Q15 2N7002E
R262 100K/F_4
38 VR_PWRGD_CLKEN#

HOLDs

for GPU
H7 H18 H15 H17 H11 H16

SI ME change Footprint
H9 H10

SI for ME change footprint
H1 H2 H3 H4 H19

SI add for PCH hole
H22 H23

H8 H21 H14 H20

for CPU
H13 H12 H5 H6

http://laptop-motherboard-schematic.blogspot.com/

PROJECT : SP8
Quanta Computer Inc.
Size: Custom | Document Number: Clock Gen(9LRS3197)/HOLES | Rev: 3A
Date: Thursday, August 05, 2010 | Sheet 2 of 47

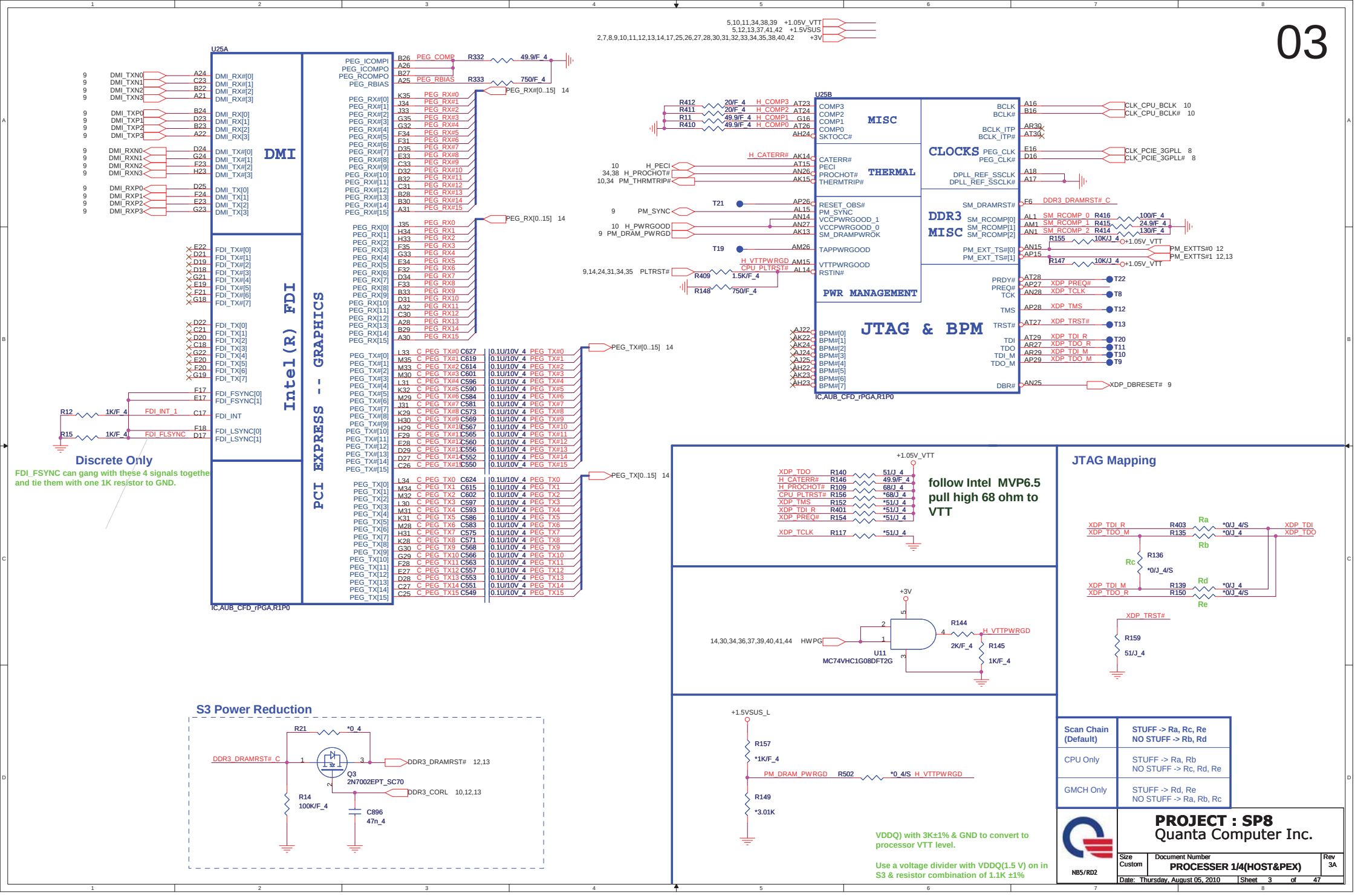

http://laptop-motherboard-schematic.blogspot.com/

AUBURNDALE/CLARKSFIELD PROCESSOR (DDR3)

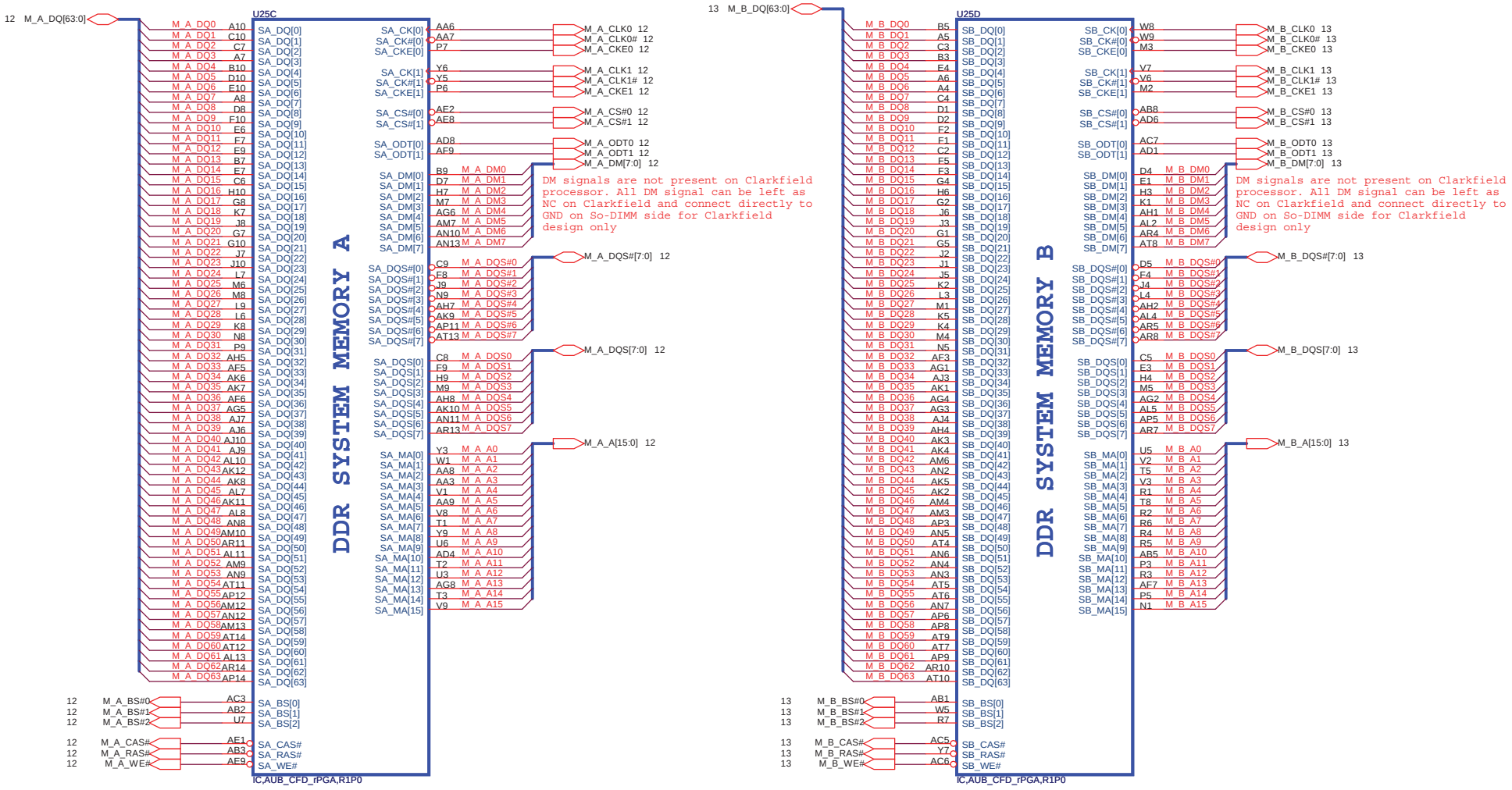

http://laptop-motherboard-schematic.blogspot.com/

NB5/RD2	PROJECT : SP8 Quanta Computer Inc.	
Size: Custom	Document Number: PROCESSER 2/4(DDR)	Rev: 3A
Date: Thursday, August 05, 2010	Sheet 4 of 47	

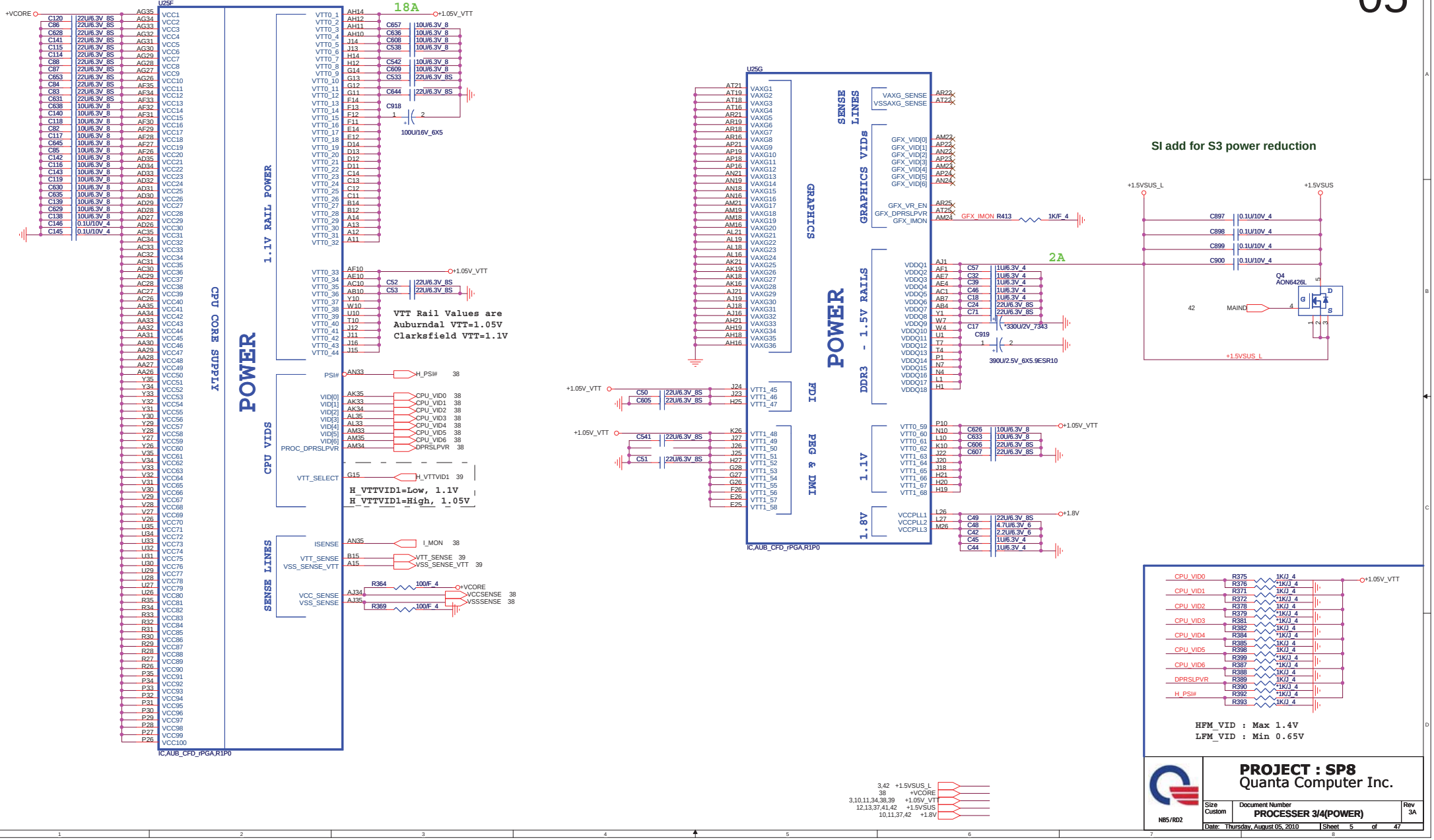

http://laptop-motherboard-schematic.blogspot.com/

AUBURNDALE/CLARKSFIELD PROCESSOR (GND)

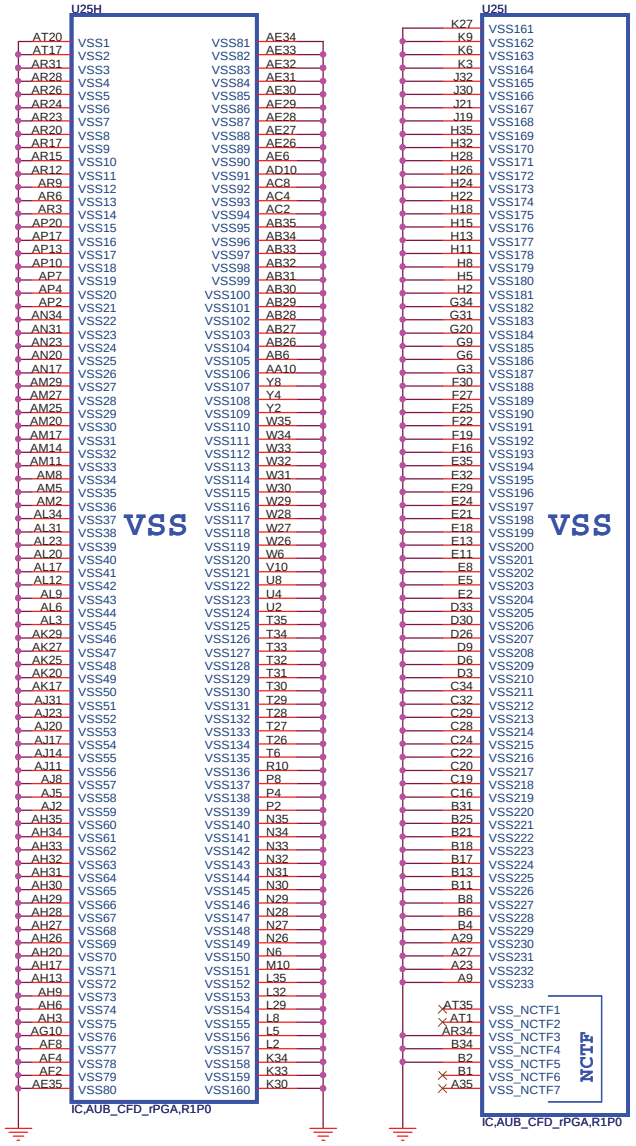

AUBURNDALE/CLARKSFIELD PROCESSOR(RESERVED, CFG)

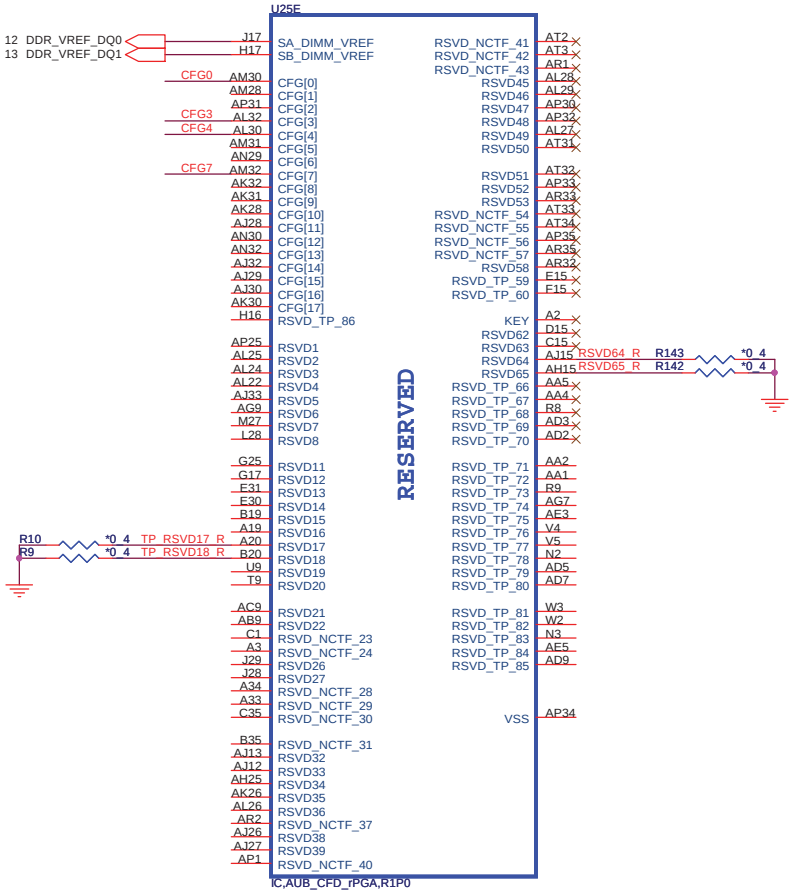

For Discrete only

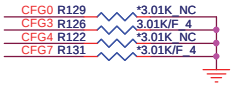

CFG[1:0] - PCI_Epress Configuration Select
* 11= 1 x 16 PEG
* 10= 2 x 8 PEG

	1	0
CFG4 (Display Port Presence)	Disabled; No Physical Display Port attached to Embedded Diplay Port	Enabled; An external Display port device is connected to the Embedded Display port
CFG0 (PCI-Epress Configuration Select)	Single PEG	Bifurcation enabled
CFG3 (PCI-Express Static Lane Reversal)	Normal Operation	Lane Numbers Reversed (15->0, 14->1)

The Clarkfield processor's PCI Express interface may not meet PCI Express 2.0 jitter specifications. Intel recommends placing a 3.01K +/- 5% pull down resistor to VSS on CFG[7] pin for both rPGA and BGA components. This pull down resistor should be removed when this issue is fixed.

http://laptop-motherboard-schematic.blogspot.com/

NB5/RD2

PROJECT : SP8
Quanta Computer Inc.

Size	Document Number	Rev
Custom	PROCESSER 4/4 (GND)	3A

Date: Thursday, August 05, 2010 Sheet 6 of 47

INTVRMEN - Integrated SUS 1.1V VRM Enable
High - Enable Internal VRs

IBEX PEAK-M (HDA,JTAG,SATA)

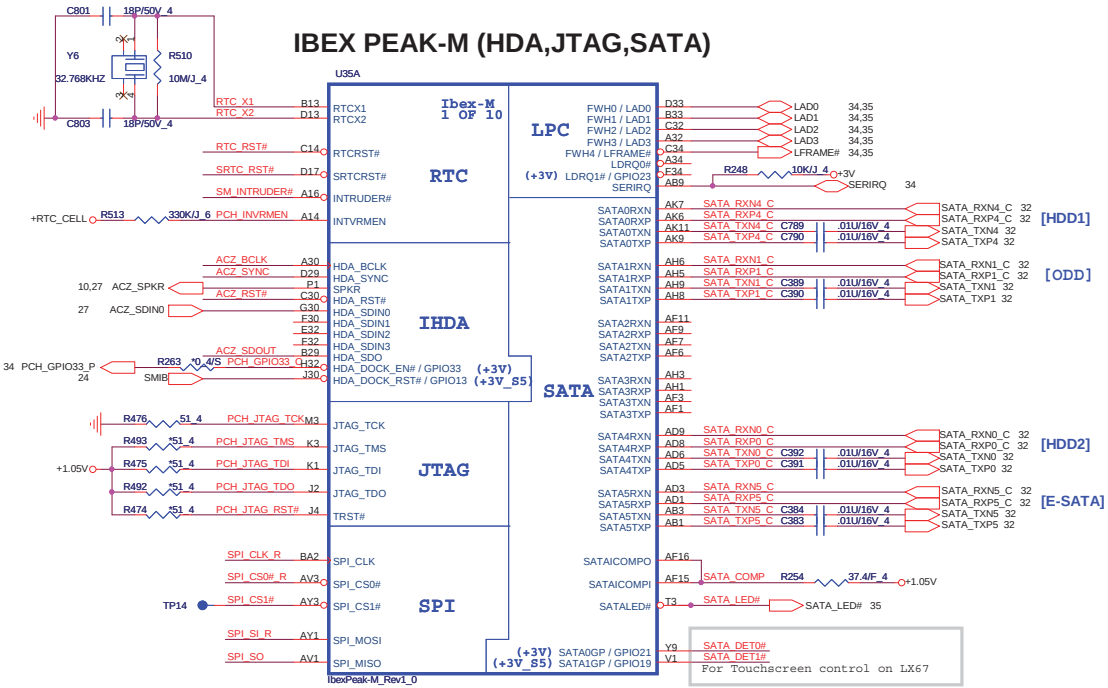

The SATALED# signal is open-collector
and requires a weak external pull-up
(8.2 k to 10 k) to +V3.3

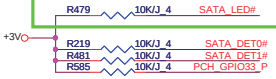

IBEX PEAK-M (LVDS,DDI)

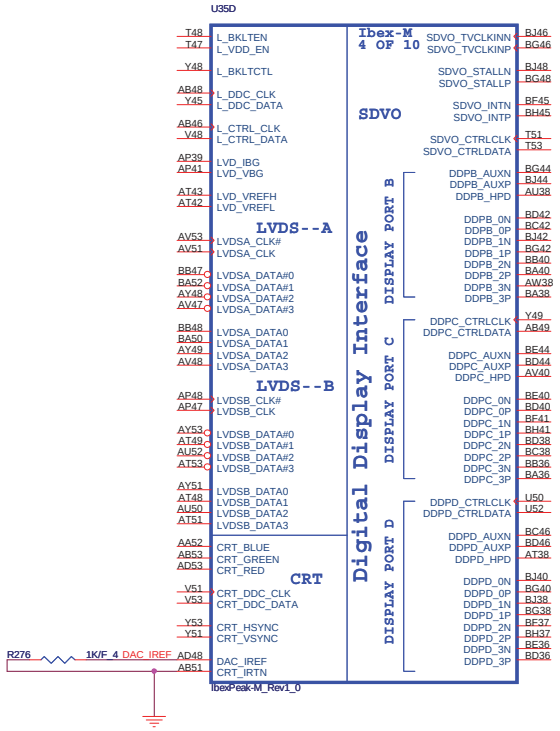

For AUDIO

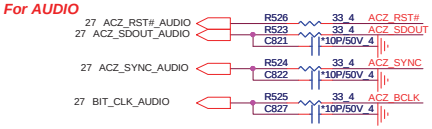

RTC

1mA

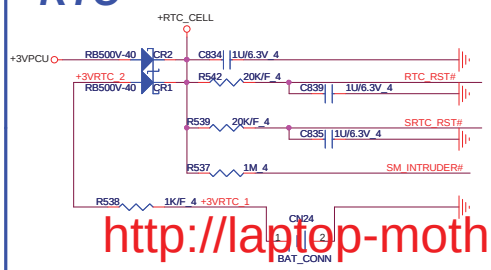

4M byte SPI ROM

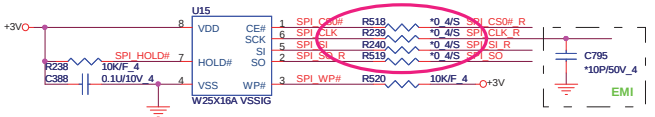

2,8,9,11,37,38 +1.05V
2,3,8,9,10,11,12,13,14,17,25,26,27,28,30,31,32,33,34,35,38,40,42 +3V
25,30,33,34,35,36,37,39,40,42,43 +3VPCU

Socket DG008000031
MXIC AKE39FB8Z08
WINBOND AKE891P0N00

http://laptop-motherboard-schematic.blogspot.com/

PROJECT : SP8		
Quanta Computer Inc.		
NB5/RD2	Size: Custom	Document Number: PCH 1/5 (SATA,HDA,LPC) Rev: 3A
	Date: Thursday, August 05, 2010	Sheet 7 of 47

IBEX PEAK-M (GND)

U35I

AY7	VSS[159]	VSS[259]	H49
B11	VSS[160]	VSS[260]	H5
B15	VSS[161]	VSS[261]	J24
B19	VSS[162]	VSS[262]	K11
B23	VSS[163]	VSS[263]	K43
B31	VSS[164]	VSS[264]	K47
B35	VSS[165]	VSS[265]	K7
B39	VSS[166]	VSS[266]	L14
B43	VSS[167]	VSS[267]	L18
B47	VSS[168]	VSS[268]	L2
B7	VSS[169]	VSS[269]	L22
BG12	VSS[170]	VSS[270]	L32
BB12	VSS[171]	VSS[271]	L36
BB16	VSS[172]	VSS[272]	L40
BB20	VSS[173]	VSS[273]	L52
BB24	VSS[174]	VSS[274]	M12
BB30	VSS[175]	VSS[275]	M16
BB34	VSS[176]	VSS[276]	M20
BB38	VSS[177]	VSS[277]	N38
BB42	VSS[178]	VSS[278]	M34
BB49	VSS[179]	VSS[279]	M38
BB5	VSS[180]	VSS[280]	M42
BC10	VSS[181]	VSS[281]	M46
BC14	VSS[182]	VSS[282]	M49
BC18	VSS[183]	VSS[283]	M5
BC2	VSS[184]	VSS[284]	M8
BC22	VSS[185]	VSS[285]	N24
BC32	VSS[186]	VSS[286]	P11
BC36	VSS[187]	VSS[287]	AD15
BC40	VSS[188]	VSS[288]	P22
BC44	VSS[189]	VSS[289]	P30
BC52	VSS[190]	VSS[290]	P32
BH9	VSS[191]	VSS[291]	P34
BD48	VSS[192]	VSS[292]	P42
BD49	VSS[193]	VSS[293]	P45
BD5	VSS[194]	VSS[294]	P47
BE12	VSS[195]	VSS[295]	R2
BE16	VSS[196]	VSS[296]	R52
BE20	VSS[197]	VSS[297]	T12
BE24	VSS[198]	VSS[298]	T41
BE30	VSS[199]	VSS[299]	T46
BE34	VSS[200]	VSS[300]	T49
BE38	VSS[201]	VSS[301]	T5
BE42	VSS[202]	VSS[302]	T8
BE46	VSS[203]	VSS[303]	U30
BE48	VSS[204]	VSS[304]	U31
BE50	VSS[205]	VSS[305]	U32
BE6	VSS[206]	VSS[306]	U34
BE8	VSS[207]	VSS[307]	P38
BF3	VSS[208]	VSS[308]	V11
BF49	VSS[209]	VSS[309]	P16
BF51	VSS[210]	VSS[310]	V19
BG18	VSS[211]	VSS[311]	V20
BG24	VSS[212]	VSS[312]	V22
BG4	VSS[213]	VSS[313]	V30
BG50	VSS[214]	VSS[314]	V31
BH11	VSS[215]	VSS[315]	V32
BH15	VSS[216]	VSS[316]	V34
BH19	VSS[217]	VSS[317]	V35
BH23	VSS[218]	VSS[318]	V38
BH31	VSS[219]	VSS[319]	V43
BH35	VSS[220]	VSS[320]	V45
BH39	VSS[221]	VSS[321]	V46
BH43	VSS[222]	VSS[322]	V47
BH47	VSS[223]	VSS[323]	V49
BH7	VSS[224]	VSS[324]	V5
C12	VSS[225]	VSS[325]	V7
C50	VSS[226]	VSS[326]	V8
D51	VSS[227]	VSS[327]	W2
E12	VSS[228]	VSS[328]	W52
E16	VSS[229]	VSS[329]	Y11
E20	VSS[230]	VSS[330]	Y12
E24	VSS[231]	VSS[331]	Y15
E30	VSS[232]	VSS[332]	Y19
E34	VSS[233]	VSS[333]	Y23
E38	VSS[234]	VSS[334]	Y28
E42	VSS[235]	VSS[335]	Y30
E46	VSS[236]	VSS[336]	Y31
E48	VSS[237]	VSS[337]	Y32
E6	VSS[238]	VSS[338]	Y38
E8	VSS[239]	VSS[339]	Y43
F49	VSS[240]	VSS[340]	Y46
F5	VSS[241]	VSS[341]	P49
G10	VSS[242]	VSS[342]	Y5
G14	VSS[243]	VSS[343]	Y6
G18	VSS[244]	VSS[344]	Y8
G2	VSS[245]	VSS[345]	P24
G22	VSS[246]	VSS[346]	T43
G32	VSS[247]	VSS[347]	AD51
G36	VSS[248]	VSS[348]	AT8
G40	VSS[249]	VSS[349]	AD47
G44	VSS[250]	VSS[350]	Y47
G52	VSS[251]	VSS[351]	AT12
AF39	VSS[252]	VSS[352]	AM6
H16	VSS[253]	VSS[353]	AT13
H20	VSS[254]	VSS[354]	AM5
H30	VSS[255]	VSS[355]	AK45
H34	VSS[256]	VSS[356]	AK39
H38	VSS[257]	VSS[366]	AV14
H42	VSS[258]		

IbexPeak-M_Rev1_0

+1.05V

C930 *0.1U/10V_4

SP81.1 SI for RF reserve

IBEX PEAK-M (PCI-E,SMBUS,CLK)

U35B

Ibex-M 2 OF 10

PCI-E*

[WLAN]

35 PCIE_RXN0 — PCIE_RXN0 BG30
35 PCIE_RXP0 — PCIE_RXP0 BJ30
35 PCIE_TXN0 — C413 0.1U/10V_4 — C422 0.1U/10V_4 — PCIE_TXN0_C BF29
35 PCIE_TXP0 — PCIE_TXP0_C BH29

[LAN]

31 PCIE_RXN1_LAN — PCIE_RXN1_LAN AW30
31 PCIE_RXP1_LAN — PCIE_RXP1_LAN BA30
31 PCIE_TXN1_LAN — C428 0.1U/10V_4 — C429 0.1U/10V_4 — PCIE_TXN1_C BC30
31 PCIE_TXP1_LAN — PCIE_TXP1_C BD30

[USB3.0]

24 PCIE_RXN1_USB3.0 — AU30
24 PCIE_RXP1_USB3.0 — AT30
24 PCIE_TXN1_USB3.0 — C436 .1U/10V_4 — C437 .1U/10V_4 — PCIE_TXN3_C AU32
24 PCIE_TXP1_USB3.0 — PCIE_TXP3_C AV32

PERN1 PERP1 PETN1 PETP1
PERN2 PERP2 PETN2 PETP2
PERN3 PERP3 PETN3 PETP3
PERN4 PERP4 PETN4 PETP4
PERN5 PERP5 PETN5 PETP5
PERN6 PERP6 PETN6 PETP6
PERN7 PERP7 PETN7 PETP7
PERN8 PERP8 PETN8 PETP8

BA32 BB32 BD32 BE32
BF33 BH33 BG32 BJ32
BA34 AW34 BC34 BD34
AT34 AU34 AU36 AV36
BG34 BJ34 BG36 BJ36

AK48 CLKOUT_PCIE0N
AK47 CLKOUT_PCIE0P

PCIE_CLK_REQ0# P9 — PCIECLKRQ0# / GPIO73 (+3V_S5)
AM43 CLKOUT_PCIE1N
AM45 CLKOUT_PCIE1P

[WLAN]
35 CLK_PCIE_WLAN#
35 CLK_PCIE_WLAN
35 CLK1_OE#
35 PCIE_CLK_REQ1# — U4 — PCIECLKRQ1# / GPIO18 (+3V)

AM47 CLKOUT_PCIE2N
AM48 CLKOUT_PCIE2P

CLK2_OE# — N4 — PCIECLKRQ2# / GPIO20 (+3V)

[LAN]
31 CLK_PCIE_LAN#
31 CLK_PCIE_LAN
AH42 CLKOUT_PCIE3N
AH41 CLKOUT_PCIE3P
31 PCIE_CLK_REQ3# — A8 — PCIECLKRQ3# / GPIO25 (+3V_S5)

AM51 CLKOUT_PCIE4N
AM53 CLKOUT_PCIE4P

PCIE_CLK_REQ4# M9 — PCIECLKRQ4# / GPIO26 (+3V_S5)

AJ50 CLKOUT_PCIE5N
AJ52 CLKOUT_PCIE5P

PCIE_CLK_REQ5# H6 — PCIECLKRQ5# / GPIO44 (+3V_S5)

[USB3.0]
24 CLK_USB3.0_GEN2#
24 CLK_USB3.0_GEN2
AK53 CLKOUT_PEG_B_N
AK51 CLKOUT_PEG_B_P

24 PCIE_CLK_REQB# — PCIE_CLK_REQB# P13 — PEG_B_CLKRQ# / GPIO56 (+3V_S5)

IbexPeak-M_Rev1_0

SMBus

(+3V_S5) SMBALERT# / GPIO11 — B9 SMBALERT# — 10K/F_4 — R504
SMBCLK — H14 PCLK_SMB — 2.2K_4 — R246
SMBDATA — C8 PDAT_SMB — 2.2K_4 — R245
(+3V_S5) SML0ALERT# / GPIO60 — J14 SML0ALERT# — 10K/F_4 — R247
SML0CLK — C6 SMB_CLK_ME0 — 2.2K_4 — R471
SML0DATA — G8 SMB_DATA_ME0 — 2.2K_4 — R489
(+3V_S5) SML1ALERT# / GPIO74 — M14 SML1ALERT# — 10K/F_4 — R252
(+3V_S5) SML1CLK / GPIO58 — E10 SMB_CLK_ME1 — 4.7K_4 — R241
(+3V_S5) SML1DATA / GPIO75 — G12 SMB_DATA_ME1 — 4.7K_4 — R244

+3VS5

Controller Link

CL_CLK1 — T13
CL_DATA1 — T11
CL_RST1# — T9

PEG

(+3V_S5) PEG_A_CLKRQ# / GPIO47 — H1 PEG_CLKREQ#
CLKOUT_PEG_A_N — AD43 — CLK_PCIE_VGA# 14
CLKOUT_PEG_A_P — AD45 — CLK_PCIE_VGA 14
CLKOUT_DMI_N — AN4 — CLK_PCIE_3GPLL# 3
CLKOUT_DMI_P — AN2 — CLK_PCIE_3GPLL 3

From CLK BUFFER

CLKOUT_DP_N / CLKOUT_BCLK1_N — AT1 — T23
CLKOUT_DP_P / CLKOUT_BCLK1_P — AT3 — T24

CLKIN_DMI_N — AW24 — CLK_BUF_PCIE_3GPLL# 2
CLKIN_DMI_P — BA24 — CLK_BUF_PCIE_3GPLL 2

CLKIN_BCLK_N — AP3 — CLK_BUF_BCLK_N 2
CLKIN_BCLK_P — AP1 — CLK_BUF_BCLK_P 2

CLKIN_DOT_96N — F18 — CLK_BUF_DREFCLK# 2
CLKIN_DOT_96P — E18 — CLK_BUF_DREFCLK 2

CLKIN_SATA_N / CKSSCD_N — AH13 — CLK_BUF_DREFSSCLK# 2
CLKIN_SATA_P / CKSSCD_P — AH12 — CLK_BUF_DREFSSCLK 2

REFCLK14IN — P41 — CLK_ICH_14M 2

CLKIN_PCILOOPBACK — J42 CLK_PCI_FB — CLK_PCI_FB 9

Intel recommendation

XTAL25_IN — AH51 XTAL25_IN — R541 *0 4/S
XTAL25_OUT — AH53 XTAL25_OUT
XCLK_RCOMP — AF38 XCLK_RCOMP — R266 90.9/F_4 — +1.05V

Clock Flex

(+3V) CLKOUTFLEX0 / GPIO64 — T45 CLK_FLEX0 — T17
(+3V) CLKOUTFLEX1 / GPIO65 — P43 CLK_FLEX1 — T15
(+3V) CLKOUTFLEX2 / GPIO66 — T42 CLK_FLEX2 — T16
(+3V) CLKOUTFLEX3 / GPIO67 — N50 — CLK_48M_USB30 24

+3V
CLK1_OE# — R498 — 10K/J_4
CLK2_OE# — R495 — 10K/J_4

+3VS5
PCIE_CLK_REQ0# — R215 — 10K/J_4
PCIE_CLK_REQ3# — R487 — 10K/J_4
PCIE_CLK_REQ4# — R227 — 10K/J_4
PCIE_CLK_REQB# — R214 — 10K/J_4
PCIE_CLK_REQ5# — R472 — 10K/J_4

PEG_CLKREQ# — R491 — 10K/J_4

SMB_CLK_ME1 3 — Q45 2N7002E — 1 MBCLK2 12,17,25,34
+3V
SMB_DATA_ME1 3 — Q46 2N7002E — 1 MBDATA2 12,17,25,34

PDAT_SMB 3 — Q43 2N7002E — 1 CGDAT_SMB 2,12,13,28
R485 10K/F_4
+3V
R486 10K/F_4
PCLK_SMB 3 — Q44 2N7002E — 1 CGCLK_SMB 2,12,13,28

+3V — C543 0.1U/10V_4
PDAT_SMB 1 — Q56 2N7002E — 3 — Q55 2N7002E — 1 AMP_SDA 28
+3V — C544 0.1U/10V_4
PCLK_SMB 1 — Q57 2N7002E — 3 — Q54 2N7002E — 1 AMP_SCL 28
+3V — C547 0.1U/10V_4

SI for HP AMP

XTAL25_IN — C843 *18P/50V_4
R540 *1M/F_4 — Y7 *25MHZ
XTAL25_OUT — C838 *18P/50V_4

2,7,9,11,37,68 +1.05V
2,9,10,11,13,14,15,17,25,26,28,30,31,33,34,35,36,37,42 +3VS5
2,7,9,10,11,13,14,15,17,25,26,28,30,31,33,34,35,36,37,43 +3VPCU

NB5/RD2

PROJECT : SP8
Quanta Computer Inc.

Size	Document Number	Rev
Custom	PCH 2/5 (PCIE, SMBUS, CK)	3A
Date: Thursday, August 05, 2010	Sheet 8 of 47	

http://laptop-motherboard-schematic.blogspot.com/

IBEX PEAK-M (PCI,USB,NVRAM)

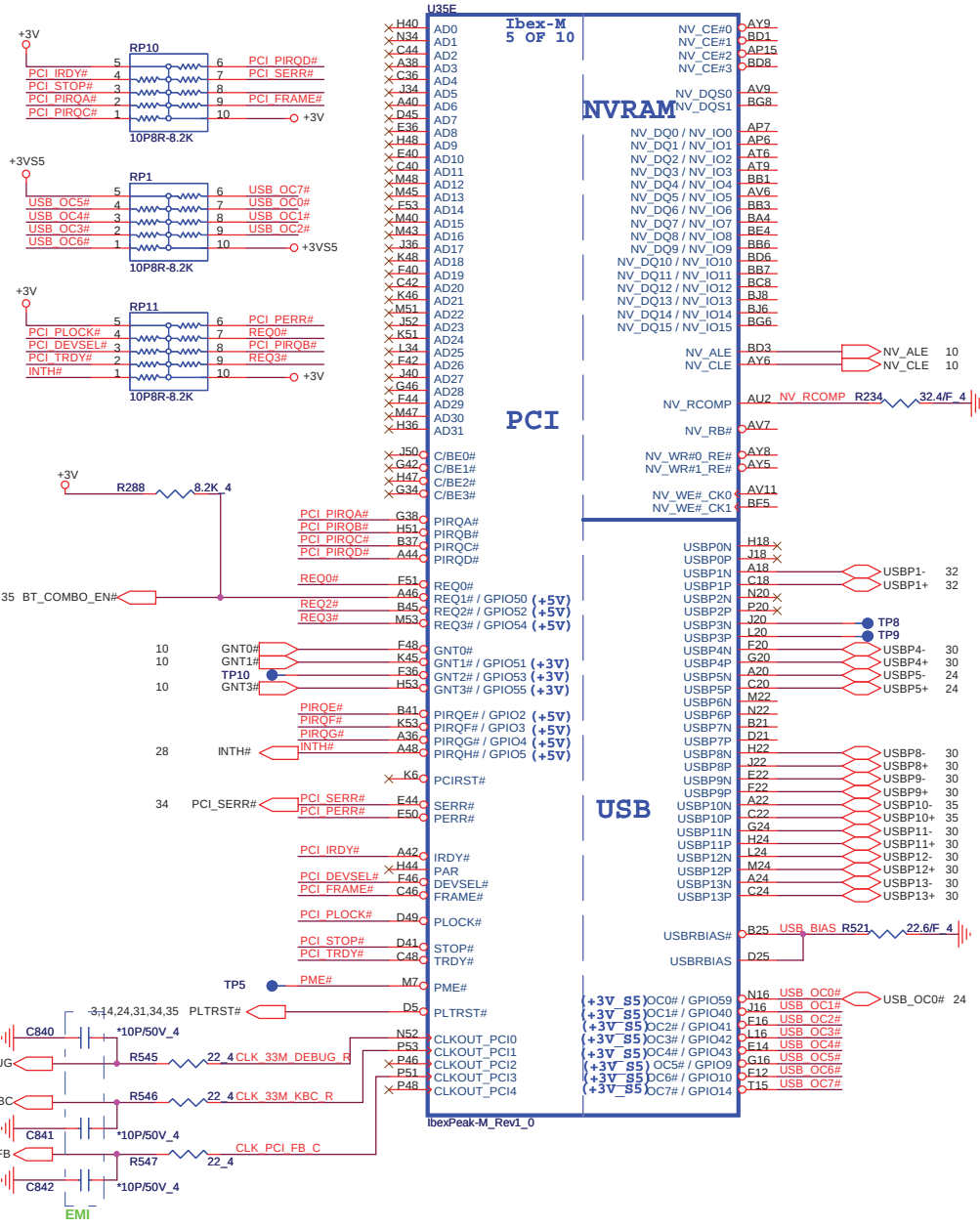

IBEX PEAK-M (DMI,FDI,GPIO)

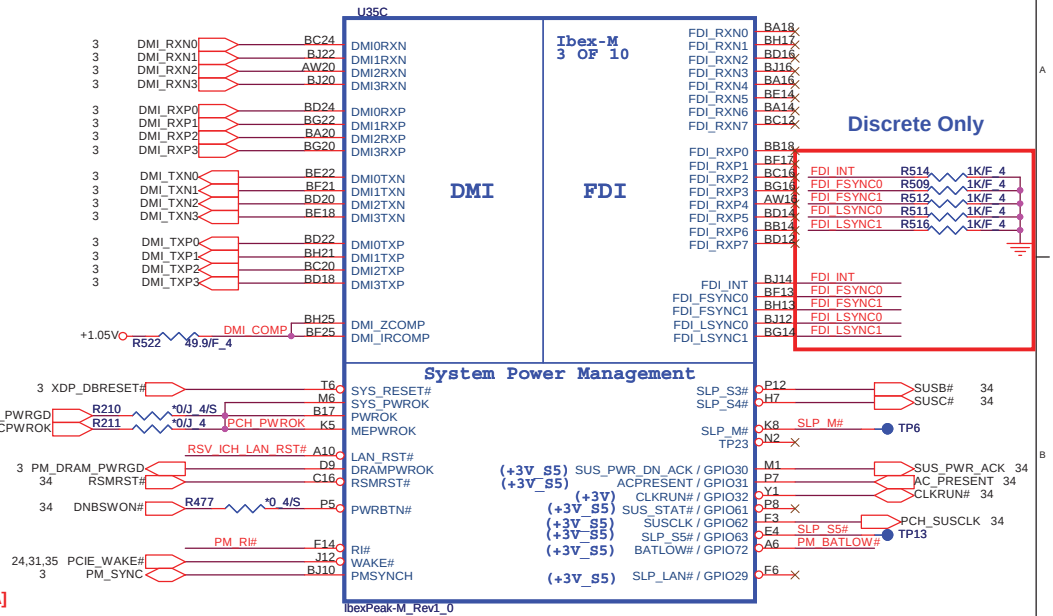

http://laptop-motherboard-schematic.blogspot.com/

NB5/RD2	PROJECT : SP8 Quanta Computer Inc.
Size: Custom	Document Number: PCH 3/5 (PCI,ONFI,USB,DMI)
Rev: 3A	
Date: Thursday, August 05, 2010	Sheet 9 of 47

IBEX PEAK-M (GPIO,VSS_NCTF,RSVD)

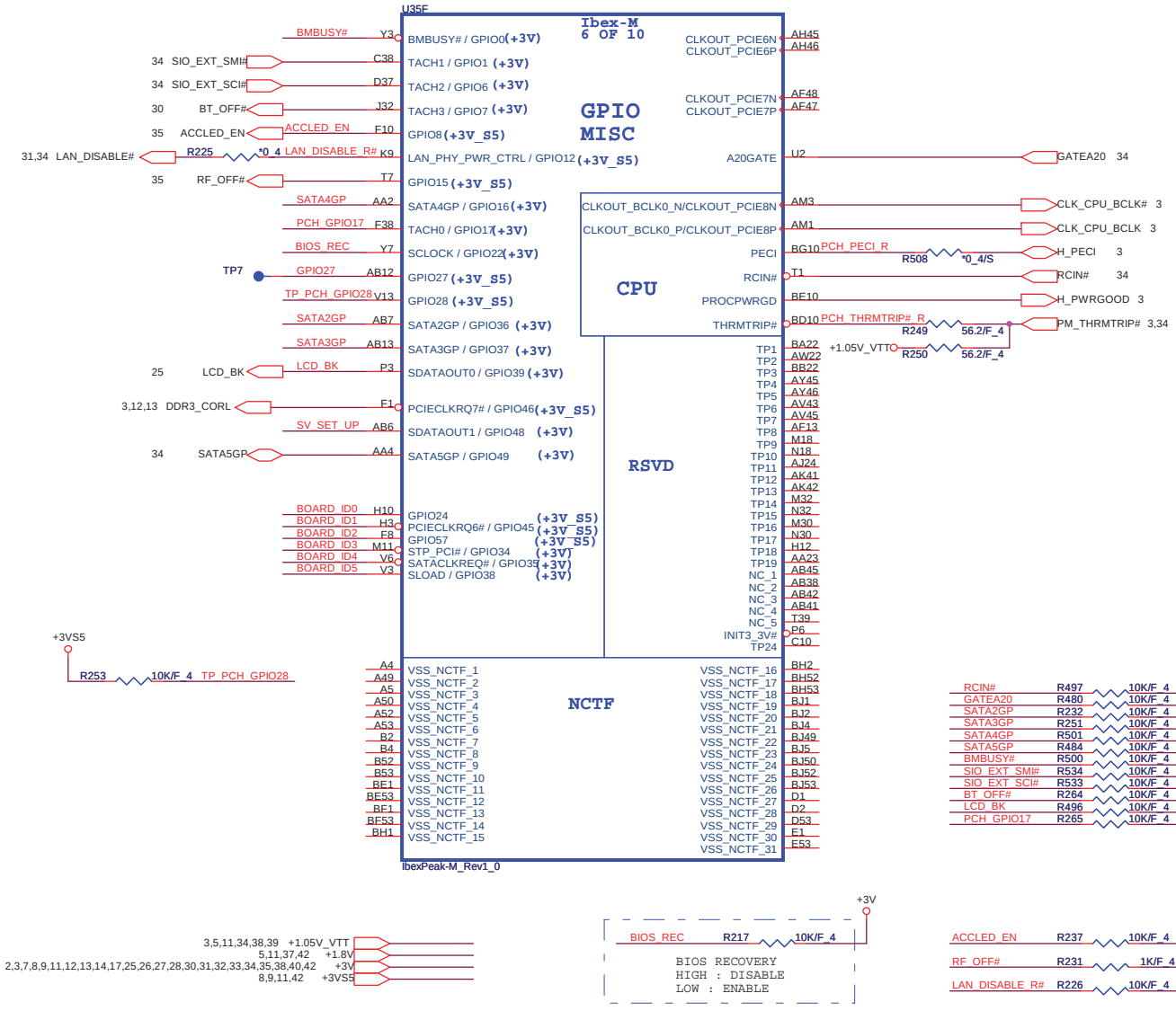

IBEX PEAK-M (GND)

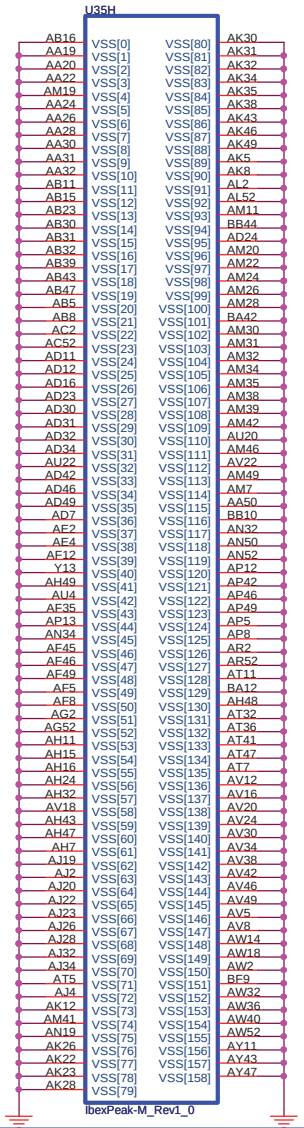

10

9 GNT3# R543 *10K_NC

A16 swap override Strap/Top-Block Swap Override jumper	
GNT3#	Low = A16 swap override/Top-Block Swap Override enabled High = Default

SV_SET_UP R218 10K/F_4 +3V

SV_SET_UP	1-X High = Strong (Default)

9 GNT0# R269 *1K/F_4
9 GNT1# R268 *1K/F_4

Boot BIOS Strap		
PCI_GNT0#	GNT#1	Boot BIOS Location
0	0	LPC
0	1	Reserved (NAND)
1	0	PCI
1	1	SPI

9 NV_ALE R506 *1K/F_4 +1.8V
9 NV_CLE R507 *1K/F_4

Danbury Technology Enabled	
NV_ALE	High = Enable Low = Disable

DMI Termination Voltage	
NV_CLE	Set to Vcc when LOW Set to Vcc/2 when HIGH

BOARD ID SETTING

Board ID	ID5	ID4	ID3	ID2	ID1	ID0
TBD	RD5 (0)	RD4 (0)	RD3 (0)	RD2 (0)	RD1 (0)	RU0 (1)
TBD	RD5 (0)	RD4 (0)	RD3 (0)	RD2 (0)	RU1 (1)	RD0 (0)
TBD	RD5 (0)	RD4 (0)	RD3 (0)	RD2 (0)	RU1 (1)	RU0 (1)
TBD	RD5 (0)	RD4 (0)	RD3 (0)	RU2 (1)	RD1 (0)	RD0 (0)
TBD	RD5 (0)	RD4 (0)	RD3 (0)	RU2 (1)	RD1 (0)	RU0 (1)
TBD	RD5 (0)	RD4 (0)	RD3 (0)	RU2 (1)	RU1 (1)	RD0 (0)
TBD	RD5 (0)	RD4 (0)	RD3 (0)	RU2 (1)	RU1 (1)	RU0 (1)

Board ID	ID0 GPIO 24	ID1 GPIO 45	ID2 GPIO 57	ID3 GPIO 34	ID4 GPIO 35	ID5 GPIO 38
SP8	0	0			0	0
SP8 1.1	0	0			1	0
Discrete			0	0		
Reserve			0	0		
ROM Size				0= 4M 1= 2M		

No Reboot Strap

7,27 ACZ_SPKR R478 *1K/F_4 +3V

http://laptop-motherboard-schematic.blogspot.com/

NB5/RD2

PROJECT : SP8
Quanta Computer Inc.

Size	Document Number	Rev
Custom	PCH 4/5 (GPIO & Strap)	3A

Date: Thursday, August 05, 2010 Sheet 10 of 47

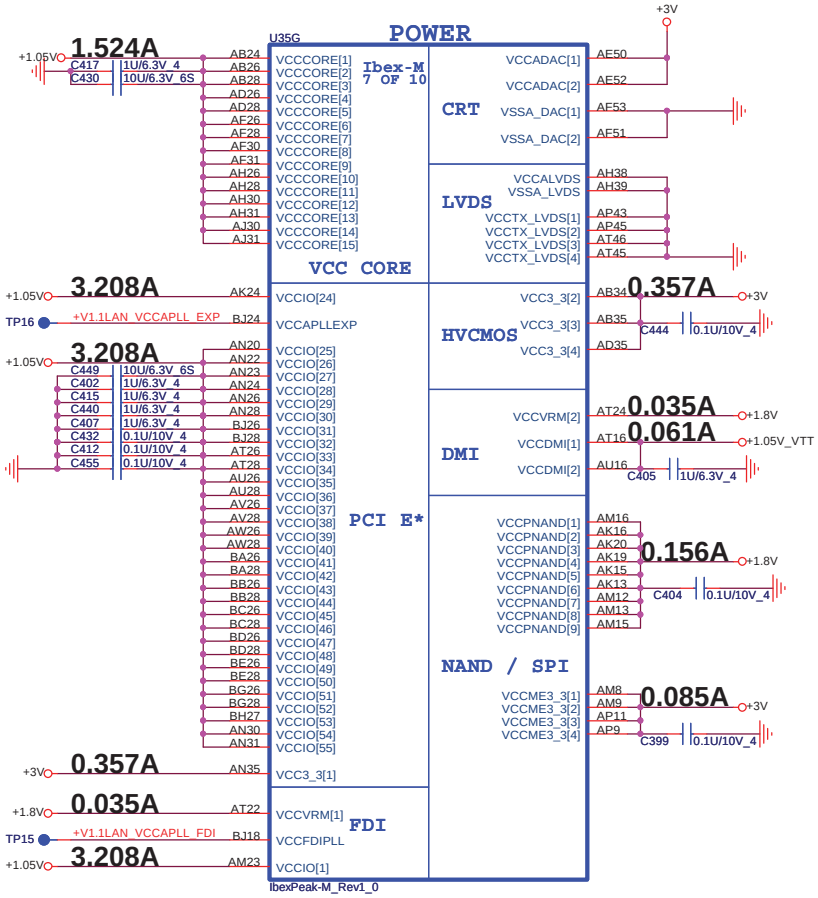

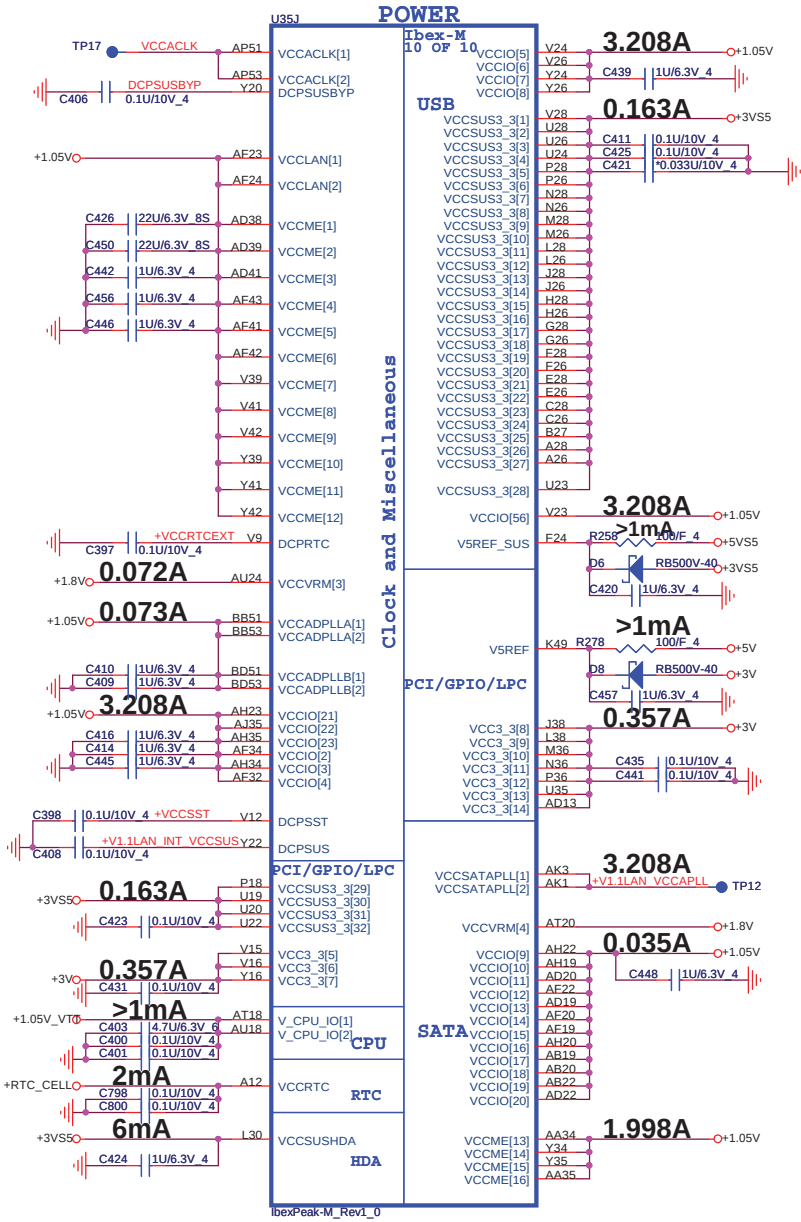

http://laptop-motherboard-schematic.blogspot.com/

PROJECT : SP8	
Quanta Computer Inc.	
Size: Custom	Document Number: PCH 5/5 (POWER)
Rev: 3A	
NB5/RD2	
Date: Thursday, August 05, 2010	Sheet 11 of 47

13,41 +0.75V_DDR_VTT
5,13,37,41,42 +1.5VSUS
2,3,7,8,9,10,11,13,14,17,25,26,27,28,30,31,32,33,34,35,38,40,42 +3V
7,25,30,33,34,35,36,37,39,40,42,43 +3VPCU
24,30,32,34,36,37,38,39,40,41,42,43,44 +5VPCU

JDIM2A

4 M_A_A[15:0]

M_A_A0 98 A0
M_A_A1 97 A1
M_A_A2 96 A2
M_A_A3 95 A3
M_A_A4 92 A4
M_A_A5 91 A5
M_A_A6 90 A6
M_A_A7 86 A7
M_A_A8 89 A8
M_A_A9 85 A9
M_A_A10 107 A10/AP
M_A_A11 84 A11
M_A_A12 83 A12/BC#
M_A_A13 119 A13
M_A_A14 80 A14
M_A_A15 78 A15

SO-DIMMA SPD Address is 0XA0
SO-DIMMA TS Address is 0X30

4 M_A_BS#0 109 BA0
4 M_A_BS#1 108 BA1
4 M_A_BS#2 79 BA2
4 M_A_CS#0 114 S0#
4 M_A_CS#1 121 S1#
4 M_A_CLK0 101 CK0
4 M_A_CLK0# 103 CK0#
4 M_A_CLK1 102 CK1
4 M_A_CLK1# 104 CK1#
4 M_A_CKE0 73 CKE0
4 M_A_CKE1 74 CKE1
4 M_A_CAS# 115 CAS#
4 M_A_RAS# 110 RAS#
4 M_A_WE# 113 WE#

R406 10K/F_4 DIMM0_SA0 197 SA0
R420 10K/F_4 DIMM0_SA1 201 SA1
2,8,13,28 CGCLK_SMB 202 SCL
2,8,13,28 CGDAT_SMB 200 SDA

4 M_A_ODT0 116 ODT0
4 M_A_ODT1 120 ODT1
4 M_A_DM[7:0]

M_A_DM0 11 DM0
M_A_DM1 28 DM1
M_A_DM2 46 DM2
M_A_DM3 63 DM3
M_A_DM4 136 DM4
M_A_DM5 153 DM5
M_A_DM6 170 DM6
M_A_DM7 187 DM7

4 M_A_DQS[7:0]

M_A_DQS0 12 DQS0
M_A_DQS1 29 DQS1
M_A_DQS2 47 DQS2
M_A_DQS3 64 DQS3
M_A_DQS4 137 DQS4
M_A_DQS5 154 DQS5
M_A_DQS6 171 DQS6
M_A_DQS7 188 DQS7

4 M_A_DQS#[7:0]

M_A_DQS#0 10 DQS#0
M_A_DQS#1 27 DQS#1
M_A_DQS#2 45 DQS#2
M_A_DQS#3 62 DQS#3
M_A_DQS#4 135 DQS#4
M_A_DQS#5 152 DQS#5
M_A_DQS#6 169 DQS#6
M_A_DQS#7 186 DQS#7

PC2100 DDR3 SDRAM SO-DIMM (204P)

DQ0 5 M_A_DQ0
DQ1 7 M_A_DQ1
DQ2 15 M_A_DQ2
DQ3 17 M_A_DQ3
DQ4 4 M_A_DQ4
DQ5 6 M_A_DQ5
DQ6 16 M_A_DQ6
DQ7 18 M_A_DQ7
DQ8 21 M_A_DQ8
DQ9 23 M_A_DQ9
DQ10 33 M_A_DQ10
DQ11 35 M_A_DQ11
DQ12 22 M_A_DQ12
DQ13 24 M_A_DQ13
DQ14 34 M_A_DQ14
DQ15 36 M_A_DQ15
DQ16 39 M_A_DQ16
DQ17 41 M_A_DQ17
DQ18 51 M_A_DQ18
DQ19 53 M_A_DQ19
DQ20 40 M_A_DQ20
DQ21 42 M_A_DQ21
DQ22 50 M_A_DQ22
DQ23 52 M_A_DQ23
DQ24 57 M_A_DQ24
DQ25 59 M_A_DQ25
DQ26 67 M_A_DQ26
DQ27 69 M_A_DQ27
DQ28 56 M_A_DQ28
DQ29 58 M_A_DQ29
DQ30 68 M_A_DQ30
DQ31 70 M_A_DQ31
DQ32 129 M_A_DQ32
DQ33 131 M_A_DQ33
DQ34 141 M_A_DQ34
DQ35 143 M_A_DQ35
DQ36 130 M_A_DQ36
DQ37 132 M_A_DQ37
DQ38 140 M_A_DQ38
DQ39 142 M_A_DQ39
DQ40 147 M_A_DQ40
DQ41 149 M_A_DQ41
DQ42 157 M_A_DQ42
DQ43 159 M_A_DQ43
DQ44 146 M_A_DQ44
DQ45 148 M_A_DQ45
DQ46 158 M_A_DQ46
DQ47 160 M_A_DQ47
DQ48 163 M_A_DQ48
DQ49 165 M_A_DQ49
DQ50 175 M_A_DQ50
DQ51 177 M_A_DQ51
DQ52 164 M_A_DQ52
DQ53 166 M_A_DQ53
DQ54 174 M_A_DQ54
DQ55 176 M_A_DQ55
DQ56 181 M_A_DQ56
DQ57 183 M_A_DQ57
DQ58 191 M_A_DQ58
DQ59 193 M_A_DQ59
DQ60 180 M_A_DQ60
DQ61 182 M_A_DQ61
DQ62 192 M_A_DQ62
DQ63 194 M_A_DQ63

DDR3-DIMM1

M_A_DQ[63:0] 4

JDIM2B

+1.5VSUS

VDD1 75
VDD2 76
VDD3 81
VDD4 82
VDD5 87
VDD6 88
VDD7 93
VDD8 94
VDD9 99
VDD10 100
VDD11 105
VDD12 106
VDD13 111
VDD14 112
VDD15 117
VDD16 118
VDD17 123
VDD18 124

+3V VDDSPD 199

NC1 77
NC2 122
NCTEST 125

3 PM_EXTTS#0 PM_EXTTS#0 198 EVENT#
3,13 DDR3_DRAMRST# 30 RESET#
+1.5VSUS R8 1K/F_4

6 DDR_VREF_DQ0 R327 *0_4 SMDDR_VREF_DQ0 1 VREF_DQ
SMDDR_VREF_DIMM 126 VREF_CA
R13 100K/F_4

VSS1 2
VSS2 3
VSS3 8
VSS4 9
VSS5 13
VSS6 14
VSS7 19
VSS8 20
VSS9 25
VSS10 26
VSS11 31
VSS12 32
VSS13 37
VSS14 38
VSS15 43

VSS16 44
VSS17 48
VSS18 49
VSS19 54
VSS20 55
VSS21 60
VSS22 61
VSS23 65
VSS24 66
VSS25 71
VSS26 72
VSS27 127
VSS28 128
VSS29 133
VSS30 134
VSS31 138
VSS32 139
VSS33 144
VSS34 145
VSS35 150
VSS36 151
VSS37 155
VSS38 156
VSS39 161
VSS40 162
VSS41 167
VSS42 168
VSS43 172
VSS44 173
VSS45 178
VSS46 179
VSS47 184
VSS48 185
VSS49 189
VSS50 190
VSS51 195
VSS52 196

VTT1 203 +0.75V_DDR_VTT
VTT2 204

GND 205
GND 206

PC2100 DDR3 SDRAM SO-DIMM (204P)

DDR3-DIMM1

C132 470P/50V_4 R95 *0_4/S SMDDR_VREF_DIMM 13
R97 *10K/F_4_NC R90 *10K/F_4_NC DDR_VTTREF 41
+1.5VSUS

Place these Caps near So-Dimm0.

+1.5VSUS
C72 10U/6.3V_6S
C34 10U/6.3V_6S
C25 10U/6.3V_6S
C109 10U/6.3V_6S
C105 10U/6.3V_6S
C122 10U/6.3V_6S
C27 0.1U/10V_4
C94 0.1U/10V_4
C40 0.1U/10V_4
C75 0.1U/10V_4
C112 0.1U/10V_4
C160 *8.2P/50V_4
C164 *8.2P/50V_4
C173 *8.2P/50V_4
C228 *6.8P/50V_4
C229 *6.8P/50V_4
PV for RF solution
+3V
C694 2.2U/6.3V_6
C695 *0.1U/10V_4

+0.75V_DDR_VTT
C719 1U/6.3V_4
C727 1U/6.3V_4
C726 1U/6.3V_4
C714 1U/6.3V_4
C723 *10U/6.3V_8
C725 *10U/6.3V_8
C722 10U/6.3V_6S

SMDDR_VREF_DQ0
C6 0.1U/10V_4
C8 2.2U/6.3V_6

SMDDR_VREF_DIMM
C153 0.1U/10V_4
C147 2.2U/6.3V_6

U23
8,17,25,34 MBCLK2 MBCLK2 8 SCLK VCC 1
8,17,25,34 MBDATA2 MBDATA2 7 SDA DXP 2
3 PM_EXTTS#0 PM_EXTTS#0 6 ALERT# DXN 3
3,13 PM_EXTTS#1 PM_EXTTS#1 4 OVERT# GND 5
G780P81U
ADDRESS: 98H

C555 0.01U/25V_4 +3V
DDR_THERMDA
C554 2200P/50V_4
DDR_THERMDC
Q29 MMBT3904-7-F

Place these U8008 near So-Dimm0(JDIM8000)

S3 Power Reduction

+1.5VSUS
R7 1K/F_4
DDR_VREF_DQ0 1 3 SMDDR_VREF_DQ0
3,10,13 DDR3_CORL 2 Q2 AP2302GN
R6 1K/F_4
C4 0.1U/10V_4

http://laptop-motherboard-schematic.blogspot.com/

NB5/RD2

PROJECT : SP8
Quanta Computer Inc.

Size Custom | Document Number DDR3 DIMM-0 | Rev 3A
Date: Thursday, August 05, 2010 | Sheet 12 of 47

12,41 +0.75V_DDR_VTT
5,12,37,41,42 +1.5VSUS
2,3,7,8,9,10,11,12,14,17,25,26,27,28,30,31,32,33,34,35,38,40,42 +3V
7,25,30,33,34,35,36,37,39,40,42,43 +3VPCU
24,30,32,34,36,37,38,39,40,41,42,43,44 +5VPCU

JDIM1A

4 M_B_A[15:0]
M_B_A0 98 A0
M_B_A1 97 A1
M_B_A2 96 A2
M_B_A3 95 A3
M_B_A4 92 A4
M_B_A5 91 A5
M_B_A6 90 A6
M_B_A7 86 A7
M_B_A8 89 A8
M_B_A9 85 A9
M_B_A10 107 A10/AP
M_B_A11 84 A11
M_B_A12 83 A12/BC#
M_B_A13 119 A13
M_B_A14 80 A14
M_B_A15 78 A15

4 M_B_BS#0 109 BA0
4 M_B_BS#1 108 BA1
4 M_B_BS#2 79 BA2
4 M_B_CS#0 114 S0#
4 M_B_CS#1 121 S1#
4 M_B_CLK0 101 CK0
4 M_B_CLK0# 103 CK0#
4 M_B_CLK1 102 CK1
4 M_B_CLK1# 104 CK1#
4 M_B_CKE0 73 CKE0
4 M_B_CKE1 74 CKE1
4 M_B_CAS# 115 CAS#
4 M_B_RAS# 110 RAS#
4 M_B_WE# 113 WE#
R132 10K/F_4 DIMM1_SA0 197 SA0
+3V R134 10K/F_4 DIMM1_SA1 201 SA1
2,8,12,28 CGCLK_SMB 202 SCL
2,8,12,28 CGDAT_SMB 200 SDA

4 M_B_ODT0 116 ODT0
4 M_B_ODT1 120 ODT1
4 M_B_DM[7:0]
M_B_DM0 11 DM0
M_B_DM1 28 DM1
M_B_DM2 46 DM2
M_B_DM3 63 DM3
M_B_DM4 136 DM4
M_B_DM5 153 DM5
M_B_DM6 170 DM6
M_B_DM7 187 DM7

SO-DIMMB SPD Address is 0XA4
SO-DIMMB TS Address is 0X34

4 M_B_DQS[7:0]
M_B_DQS0 12 DQS0
M_B_DQS1 29 DQS1
M_B_DQS2 47 DQS2
M_B_DQS3 64 DQS3
M_B_DQS4 137 DQS4
M_B_DQS5 154 DQS5
M_B_DQS6 171 DQS6
M_B_DQS7 188 DQS7

4 M_B_DQS#[7:0]
M_B_DQS#0 10 DQS#0
M_B_DQS#1 27 DQS#1
M_B_DQS#2 45 DQS#2
M_B_DQS#3 62 DQS#3
M_B_DQS#4 135 DQS#4
M_B_DQS#5 152 DQS#5
M_B_DQS#6 169 DQS#6
M_B_DQS#7 186 DQS#7

PC2100 DDR3 SDRAM SO-DIMM (204P)

DQ0 5 M_B_DQ0
DQ1 7 M_B_DQ1
DQ2 15 M_B_DQ2
DQ3 17 M_B_DQ3
DQ4 4 M_B_DQ4
DQ5 6 M_B_DQ5
DQ6 16 M_B_DQ6
DQ7 18 M_B_DQ7
DQ8 21 M_B_DQ8
DQ9 23 M_B_DQ9
DQ10 33 M_B_DQ10
DQ11 35 M_B_DQ11
DQ12 22 M_B_DQ12
DQ13 24 M_B_DQ13
DQ14 34 M_B_DQ14
DQ15 36 M_B_DQ15
DQ16 39 M_B_DQ16
DQ17 41 M_B_DQ17
DQ18 51 M_B_DQ18
DQ19 53 M_B_DQ19
DQ20 40 M_B_DQ20
DQ21 42 M_B_DQ21
DQ22 50 M_B_DQ22
DQ23 52 M_B_DQ23
DQ24 57 M_B_DQ24
DQ25 59 M_B_DQ25
DQ26 67 M_B_DQ26
DQ27 69 M_B_DQ27
DQ28 56 M_B_DQ28
DQ29 58 M_B_DQ29
DQ30 68 M_B_DQ30
DQ31 70 M_B_DQ31
DQ32 129 M_B_DQ32
DQ33 131 M_B_DQ33
DQ34 141 M_B_DQ34
DQ35 143 M_B_DQ35
DQ36 130 M_B_DQ36
DQ37 132 M_B_DQ37
DQ38 140 M_B_DQ38
DQ39 142 M_B_DQ39
DQ40 147 M_B_DQ40
DQ41 149 M_B_DQ41
DQ42 157 M_B_DQ42
DQ43 159 M_B_DQ43
DQ44 146 M_B_DQ44
DQ45 148 M_B_DQ45
DQ46 158 M_B_DQ46
DQ47 160 M_B_DQ47
DQ48 163 M_B_DQ48
DQ49 165 M_B_DQ49
DQ50 175 M_B_DQ50
DQ51 177 M_B_DQ51
DQ52 164 M_B_DQ52
DQ53 166 M_B_DQ53
DQ54 174 M_B_DQ54
DQ55 176 M_B_DQ55
DQ56 181 M_B_DQ56
DQ57 183 M_B_DQ57
DQ58 191 M_B_DQ58
DQ59 193 M_B_DQ59
DQ60 180 M_B_DQ60
DQ61 182 M_B_DQ61
DQ62 192 M_B_DQ62
DQ63 194 M_B_DQ63

DDR3-DIMM0

M_B_DQ[63:0] 4

+1.5VSUS

JDIM1B

VDD1 75
VDD2 76
VDD3 81
VDD4 82
VDD5 87
VDD6 88
VDD7 93
VDD8 94
VDD9 99
VDD10 100
VDD11 105
VDD12 106
VDD13 111
VDD14 112
VDD15 117
VDD16 118
VDD17 123
VDD18 124

+3V VDDSPD 199

NC1 77
NC2 122
NCTEST 125

3,12 PM_EXTTS#1 EVENT# 198
3,12 DDR3_DRAMRST# RESET# 30

6 DDR_VREF_DQ1 DDR_VREF_DQ1 R5 *0_4 SMDDR_VREF_DQ1
12 SMDDR_VREF_DIMM VREF_DQ 11
VREF_CA 126

R331 100K/F_4

VSS1 2
VSS2 3
VSS3 8
VSS4 9
VSS5 13
VSS6 14
VSS7 19
VSS8 20
VSS9 25
VSS10 26
VSS11 31
VSS12 32
VSS13 37
VSS14 38
VSS15 43

VSS16 44
VSS17 48
VSS18 49
VSS19 54
VSS20 55
VSS21 60
VSS22 61
VSS23 65
VSS24 66
VSS25 71
VSS26 72
VSS27 127
VSS28 128
VSS29 133
VSS30 134
VSS31 138
VSS32 139
VSS33 144
VSS34 145
VSS35 150
VSS36 151
VSS37 155
VSS38 156
VSS39 161
VSS40 162
VSS41 167
VSS42 168
VSS43 172
VSS44 173
VSS45 178
VSS46 179
VSS47 184
VSS48 185
VSS49 189
VSS50 190
VSS51 195
VSS52 196

VTT1 203
VTT2 204
+0.75V_DDR_VTT

GND 205
GND 206

PC2100 DDR3 SDRAM SO-DIMM (204P)

DDR3-DIMM0

Place these Caps near So-Dimm1

+1.5VSUS
C111 10U/6.3V_6S
C31 10U/6.3V_6S
C41 10U/6.3V_6S
C98 10U/6.3V_6S
C121 10U/6.3V_6S
C74 10U/6.3V_6S
C38 0.1U/10V_4
C70 0.1U/10V_4
C26 0.1U/10V_4
C95 0.1U/10V_4
C30 0.1U/10V_4

+0.75V_DDR_VTT
C702 1U/6.3V_4
C716 1U/6.3V_4
C704 1U/6.3V_4
C717 1U/6.3V_4
C713 *10U/6.3V_8
C728 10U/6.3V_6S
C707 10U/6.3V_6S

SMDDR_VREF_DIMM
C123 0.1U/10V_4
C128 2.2U/6.3V_6

+3V
C720 2.2U/6.3V_6
C718 *0.1U/10V_4

SMDDR_VREF_DQ1
C7 0.1U/10V_4
C5 2.2U/6.3V_6

S3 Power Reduction

+1.5VSUS
R3 1K/F_4
6 DDR_VREF_DQ1 1
3 SMDDR_VREF_DQ1
Q1 AP2302GN
2
3,10,12 DDR3_CORL
R4 1K/F_4
C3 0.1U/10V_4

http://laptop-motherboard-schematic.blogspot.com/

NB5/RD2

PROJECT : SP8
Quanta Computer Inc.

Size	Document Number	Rev
Custom	DDR3 DIMM-1	3A

Date: Thursday, August 05, 2010 Sheet 13 of 47

16,18,41 +1.0V_VGA
5,10,11,37,42 +1.8V
2,3,7,8,9,10,11,12,13,17,25,26,27,28,30,31,32,33,34,35,38,40,42 +3V

U27A

PCI EXPRESS INTERFACE

3 PEG_TX15	PEG_TX15 AA38	PCIE_RX0P	PCIE_TX0P	Y33	C_PEG_RXP15 C213 .1U/10V_4	PEG_RX15 3
3 PEG_TX#15	PEG_TX#15 Y37	PCIE_RX0N	PCIE_TX0N	Y32	C_PEG_RXN15 C201 .1U/10V_4	PEG_RX#15 3
3 PEG_TX14	PEG_TX14 Y35	PCIE_RX1P	PCIE_TX1P	W33	C_PEG_RXP14 C226 .1U/10V_4	PEG_RX14 3
3 PEG_TX#14	PEG_TX#14 W36	PCIE_RX1N	PCIE_TX1N	W32	C_PEG_RXN14 C231 .1U/10V_4	PEG_RX#14 3
3 PEG_TX13	PEG_TX13 W38	PCIE_RX2P	PCIE_TX2P	U33	C_PEG_RXP13 C236 .1U/10V_4	PEG_RX13 3
3 PEG_TX#13	PEG_TX#13 V37	PCIE_RX2N	PCIE_TX2N	U32	C_PEG_RXN13 C243 .1U/10V_4	PEG_RX#13 3
3 PEG_TX12	PEG_TX12 V35	PCIE_RX3P	PCIE_TX3P	U30	C_PEG_RXP12 C223 .1U/10V_4	PEG_RX12 3
3 PEG_TX#12	PEG_TX#12 U36	PCIE_RX3N	PCIE_TX3N	U29	C_PEG_RXN12 C217 .1U/10V_4	PEG_RX#12 3
3 PEG_TX11	PEG_TX11 U38	PCIE_RX4P	PCIE_TX4P	T33	C_PEG_RXP11 C256 .1U/10V_4	PEG_RX11 3
3 PEG_TX#11	PEG_TX#11 T37	PCIE_RX4N	PCIE_TX4N	T32	C_PEG_RXN11 C266 .1U/10V_4	PEG_RX#11 3
3 PEG_TX10	PEG_TX10 T35	PCIE_RX5P	PCIE_TX5P	T30	C_PEG_RXP10 C253 .1U/10V_4	PEG_RX10 3
3 PEG_TX#10	PEG_TX#10 R36	PCIE_RX5N	PCIE_TX5N	T29	C_PEG_RXN10 C246 .1U/10V_4	PEG_RX#10 3
3 PEG_TX9	PEG_TX9 R38	PCIE_RX6P	PCIE_TX6P	P33	C_PEG_RXP9 C269 .1U/10V_4	PEG_RX9 3
3 PEG_TX#9	PEG_TX#9 P37	PCIE_RX6N	PCIE_TX6N	P32	C_PEG_RXN9 C272 .1U/10V_4	PEG_RX#9 3
3 PEG_TX8	PEG_TX8 P35	PCIE_RX7P	PCIE_TX7P	P30	C_PEG_RXP8 C275 .1U/10V_4	PEG_RX8 3
3 PEG_TX#8	PEG_TX#8 N36	PCIE_RX7N	PCIE_TX7N	P29	C_PEG_RXN8 C288 .1U/10V_4	PEG_RX#8 3
3 PEG_TX7	PEG_TX7 N38	PCIE_RX8P	PCIE_TX8P	N33	C_PEG_RXP7 C295 0.1U/10V_4	PEG_RX7 3
3 PEG_TX#7	PEG_TX#7 M37	PCIE_RX8N	PCIE_TX8N	N32	C_PEG_RXN7 C294 0.1U/10V_4	PEG_RX#7 3
3 PEG_TX6	PEG_TX6 M35	PCIE_RX9P	PCIE_TX9P	N30	C_PEG_RXP6 C291 0.1U/10V_4	PEG_RX6 3
3 PEG_TX#6	PEG_TX#6 L36	PCIE_RX9N	PCIE_TX9N	N29	C_PEG_RXN6 C293 0.1U/10V_4	PEG_RX#6 3
3 PEG_TX5	PEG_TX5 L38	PCIE_RX10P	PCIE_TX10P	L33	C_PEG_RXP5 C296 0.1U/10V_4	PEG_RX5 3
3 PEG_TX#5	PEG_TX#5 K37	PCIE_RX10N	PCIE_TX10N	L32	C_PEG_RXN5 C297 0.1U/10V_4	PEG_RX#5 3
3 PEG_TX4	PEG_TX4 K35	PCIE_RX11P	PCIE_TX11P	L30	C_PEG_RXP4 C298 0.1U/10V_4	PEG_RX4 3
3 PEG_TX#4	PEG_TX#4 J36	PCIE_RX11N	PCIE_TX11N	L29	C_PEG_RXN4 C299 0.1U/10V_4	PEG_RX#4 3
3 PEG_TX3	PEG_TX3 J38	PCIE_RX12P	PCIE_TX12P	K33	C_PEG_RXP3 C300 0.1U/10V_4	PEG_RX3 3
3 PEG_TX#3	PEG_TX#3 H37	PCIE_RX12N	PCIE_TX12N	K32	C_PEG_RXN3 C301 0.1U/10V_4	PEG_RX#3 3
3 PEG_TX2	PEG_TX2 H35	PCIE_RX13P	PCIE_TX13P	J33	C_PEG_RXP2 C302 0.1U/10V_4	PEG_RX2 3
3 PEG_TX#2	PEG_TX#2 G36	PCIE_RX13N	PCIE_TX13N	J32	C_PEG_RXN2 C303 0.1U/10V_4	PEG_RX#2 3
3 PEG_TX1	PEG_TX1 G38	PCIE_RX14P	PCIE_TX14P	K30	C_PEG_RXP1 C307 0.1U/10V_4	PEG_RX1 3
3 PEG_TX#1	PEG_TX#1 F37	PCIE_RX14N	PCIE_TX14N	K29	C_PEG_RXN1 C306 0.1U/10V_4	PEG_RX#1 3
3 PEG_TX0	PEG_TX0 E35	PCIE_RX15P	PCIE_TX15P	H33	C_PEG_RXP0 C304 0.1U/10V_4	PEG_RX0 3
3 PEG_TX#0	PEG_TX#0 E37	PCIE_RX15N	PCIE_TX15N	H32	C_PEG_RXN0 C305 0.1U/10V_4	PEG_RX#0 3

CLOCK

8 CLK_PCIE_VGA — CLK_PCIE_VGA AB35 — PCIE_REFCLKP
8 CLK_PCIE_VGA# — CLK_PCIE_VGA# AA36 — PCIE_REFCLKN

PWRGOOD_BUF — AJ21 NC#1, AK21 NC#2, AH16 PWRGOOD

3,9,24,31,34,35 PLTRST# — AA30 PERSTB

CALIBRATION

PCIE_CALRP — Y30 — R128 1.27K/F_4
PCIE_CALRN — Y29 — R127 2K/F_4 — +1.0V_VGA

Broadway

U27H

DP C/D POWER

+1.8V_DPC_VDD18	AP20 AP21	DPC_VDD18#1 DPC_VDD18#2
+1.0V_DPC_VDD10	AP13 AT13	DPC_VDD10#1 DPC_VDD10#2
	AN17 AP16 AP17 AW14 AW16	DPC_VSSR#1 DPC_VSSR#2 DPC_VSSR#3 DPC_VSSR#4 DPC_VSSR#5
+1.8V_DPC_VDD18	AP22 AP23	DPD_VDD18#1 DPD_VDD18#2
+1.0V_DPC_VDD10	AP14 AP15	DPD_VDD10#1 DPD_VDD10#2
	AN19 AP18 AP19 AW20 AW22	DPD_VSSR#1 DPD_VSSR#2 DPD_VSSR#3 DPD_VSSR#4 DPD_VSSR#5
R29 150/F_4 DPCD_CALR	AW18	DPCD_CALR

DP E/F POWER

+1.8V_DPE_VDD18	AH34 AJ34	DPE_VDD18#1 DPE_VDD18#2
+1.0V_DPE_VDD10	AL33 AM33	DPE_VDD10#1 DPE_VDD10#2
	AN34 AP39 AR39 AU37	DPE_VSSR#1 DPE_VSSR#2 DPE_VSSR#3 DPE_VSSR#4
+1.8V_DPE_VDD18	AF34 AG34	DPF_VDD18#1 DPF_VDD18#2
+1.0V_DPE_VDD10	AK33 AK34	DPF_VDD10#1 DPF_VDD10#2
	AF39 AH39 AK39 AL34 AM34	DPF_VSSR#1 DPF_VSSR#2 DPF_VSSR#3 DPF_VSSR#4 DPF_VSSR#5
R356 150/F_4 DPEF_CALR	AM39	DPEF_CALR

DP A/B POWER

	AN24 AP24	DPA_VDD18#1 DPA_VDD18#2
	AP31 AP32	DPA_VDD10#1 DPA_VDD10#2
	AN27 AP27 AP28 AW24 AW26	DPA_VSSR#1 DPA_VSSR#2 DPA_VSSR#3 DPA_VSSR#4 DPA_VSSR#5
	AP25 AP26	DPB_VDD18#1 DPB_VDD18#2
	AN33 AP33	DPB_VDD10#1 DPB_VDD10#2
	AN29 AP29 AP30 AW30 AW32	DPB_VSSR#1 DPB_VSSR#2 DPB_VSSR#3 DPB_VSSR#4 DPB_VSSR#5
	AW28 DPAB_CALR R352 150/F_4	DPAB_CALR

DP PLL POWER

	AU28 AV27	DPA_PVDD DPA_PVSS
	AV29 AR28	DPB_PVDD DPB_PVSS
	AU18 AV17	DPC_PVDD DPC_PVSS
	AV19 AR18	DPD_PVDD DPD_PVSS
	AM37 AN38	DPE_PVDD DPE_PVSS
	AL38 AM35	DPF_PVDD DPF_PVSS

Broadway

+1.8V_DPA_VDD18

(DPA/B_VDD10 : 1.0V@115mA+115mA) +1.0V_VGA
+1.0V_DPA_VDD10 — HCB1608KF-181T15_6 L12 — C97 10U/6.3V_8, C108 1U/6.3V_4, C107 .1U/10V_4

(DPB_PVDD : 1.8V@20mA) +1.8V_VGA
+1.8V_DPB_PVDD — HCB1608KF-181T15_6 L48 — C616 10U/6.3V_8, C622 1U/6.3V_4, C621 .1U/10V_4

(DPC_PVDD:1.8V@20mA) +1.8V_VGA
+1.8V_DPC_PVDD — HCB1608KF-181T15_6 L44 — C576 10U/6.3V_8, C587 .1U/10V_4, C585 1U/6.3V_4

(DPD_PVDD:1.8V@20mA) +1.8V_VGA
+1.8V_DPD_PVDD — HCB1608KF-181T15_6 L47 — C604 10U/6.3V_8, C620 .1U/10V_4, C618 1U/6.3V_4

(DPE/F_PVDD1.8V@20mA+20mA) +1.8V_VGA
+1.8V_DPE_PVDD — HCB1608KF-181T15_6 L50 — C641 10U/6.3V_8, C640 .1U/10V_4, C639 .1U/10V_4

AMD 0821

(DPE/F_VDD18 : 1.8V@200mA+200mA) +1.8V_VGA
+1.8V_DPE_VDD18 — HCB1608KF-181T15_6 L17 — C135 10U/6.3V_8, C137 1U/6.3V_4, C136 .1U/10V_4

(DPE/F_VDD10 : 1.0V@115mA+115mA) +1.0V_VGA
+1.0V_DPE_VDD10 — HCB1608KF-181T15_6 L13 — C99 10U/6.3V_8, C102 1U/6.3V_4, C101 .1U/10V_4

(DPA/B_VDD18 : 1.8V@200mA+200mA) +1.8V_VGA
+1.8V_DPA_VDD18 — HCB1608KF-181T15_6 L46 — C591 10U/6.3V_8, C599 1U/6.3V_4, C610 .1U/10V_4

(DPC/D_VDD10 : 1.0V@115mA+115mA) +1.0V_VGA
+1.0V_DPC_VDD10 — HCB1608KF-181T15_6 L59 — C329 10U/6.3V_8, C78 1U/6.3V_4, C92 .1U/10V_4

(DPC/D_VDD18 : 1.8V@200mA+200mA) +1.8V_VGA
+1.8V_DPC_VDD18 — HCB1608KF-181T15_6 L60 — C598 10U/6.3V_8, C588 1U/6.3V_4, C589 .1U/10V_4

3,30,34,36,37,39,40,41,44 HWPG — U3 *MC74VHC1G08DFT2G (+3V) — R36 4 *10K_4 — PWRGOOD_BUF — R35 12K_4

For future ASIC, if PWRGOOD_BUF is not requred it should be pulled to ground.

http://laptop-motherboard-schematic.blogspot.com/

NB5/RD2	PROJECT : SP8 Quanta Computer Inc.	
Size Custom	Document Number ATI M97-M2 (PCIE I/F) 1/5	Rev 3A
Date: Thursday, August 05, 2010	Sheet 14 of 47	

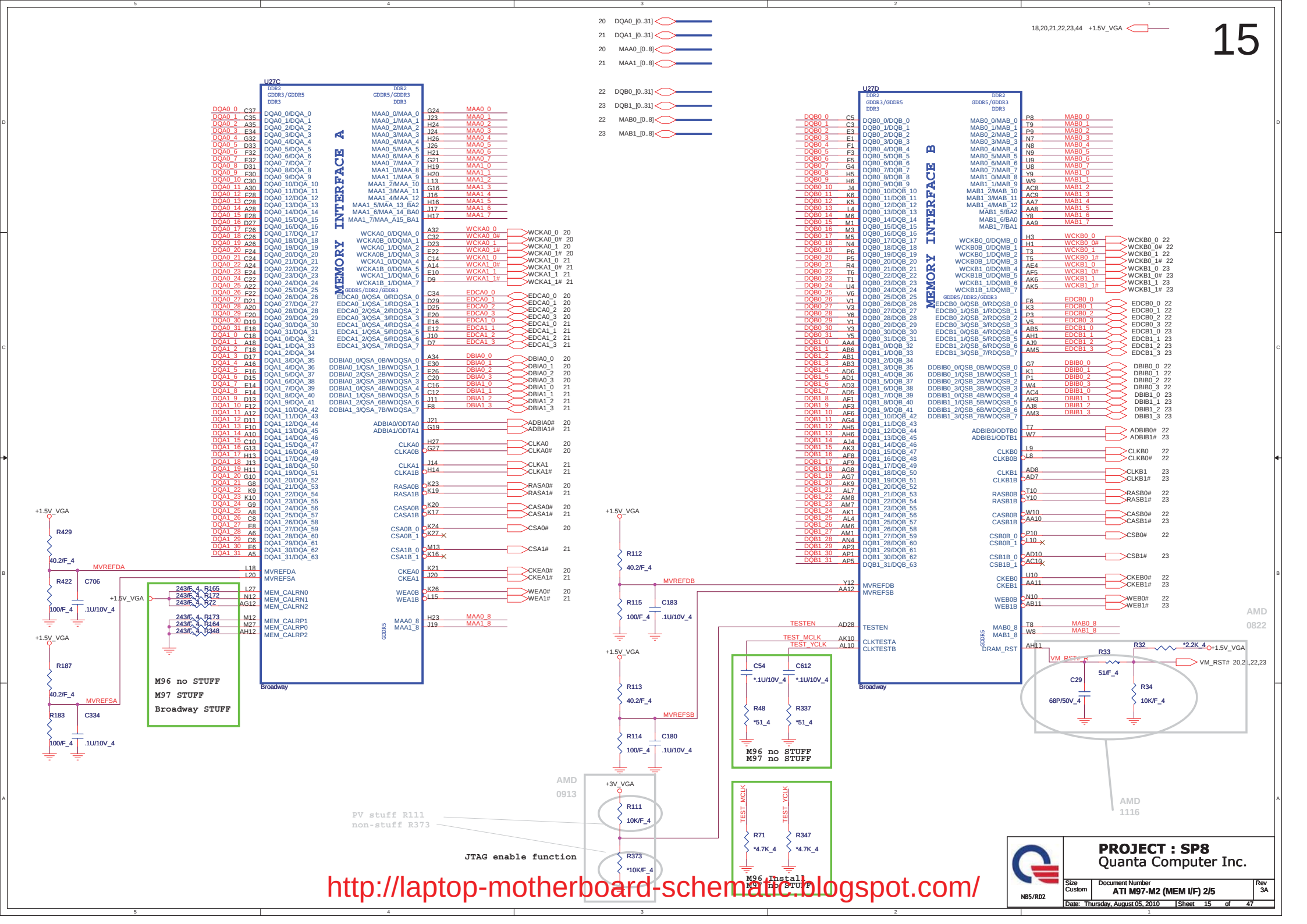
U27C
MEMORY INTERFACE A
Broadway
U27D
MEMORY INTERFACE B
Broadway
M96 no STUFF
M97 STUFF
Broadway STUFF
M96 no STUFF
M97 no STUFF
M96 Install
M97 No STUFF
PV stuff R111
non-stuff R373
JTAG enable function
AMD 0913
AMD 0822
AMD 1116
http://laptop-motherboard-schematic.blogspot.com/

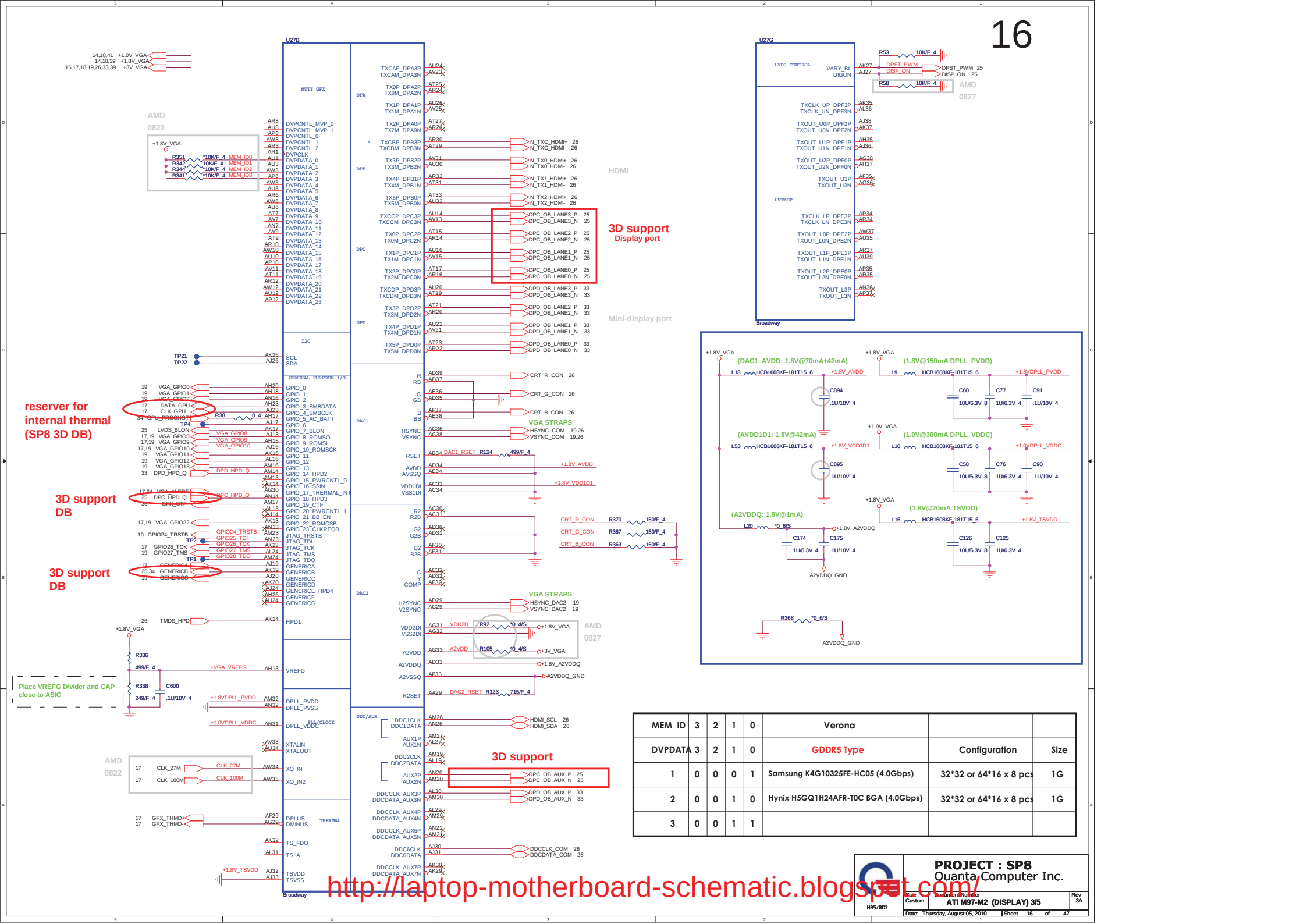

MEM ID	3	2	1	0	Verona		
DVPDATA	3	2	1	0	GDDR5 Type	Configuration	Size
1	0	0	0	1	Samsung K4G10325FE-HC05 (4.0Gbps)	32*32 or 64*16 x 8 pcs	1G
2	0	0	1	0	Hynix H5GQ1H24AFR-T0C BGA (4.0Gbps)	32*32 or 64*16 x 8 pcs	1G
3	0	0	1	1			

http://laptop-motherboard-schematic.blogspot.com/

PROJECT : SP8
Quanta Computer Inc.
N85/RD2
Size: Custom | Document Number: ATI M97-M2 (DISPLAY) 3/5 | Rev: 3A
Date: Thursday, August 05, 2010 | Sheet 16 of 47

27MHz + 100Mhz OSC Option

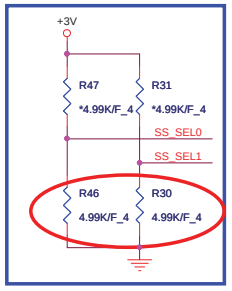

SP8 1.1 DB

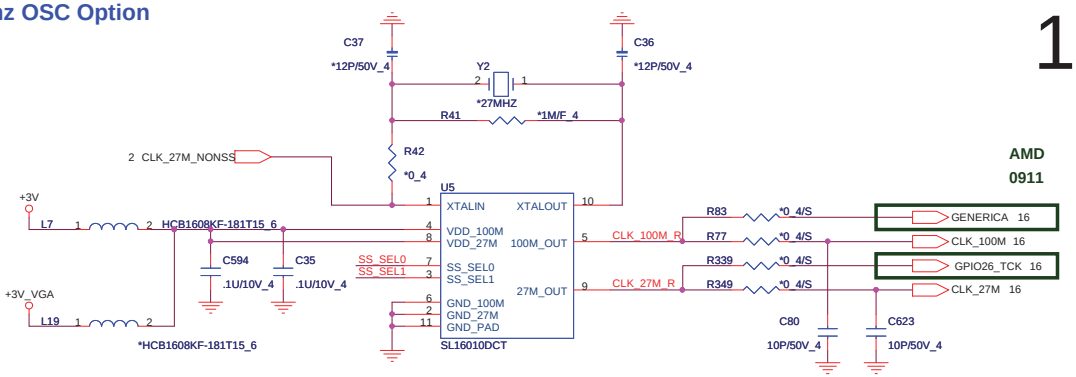

AMD
0911

SS_SEL1	SS_SEL0	Spread Percent(%) SS_CLK (PIN 5)
LOW	LOW	Spread Off
LOW	Middle	-0.5%
LOW	High	-2.5%
Middle	LOW	-0.25%
Middle	Middle	-0.75%
Middle	High	-1.0%
High	LOW	-1.5%
High	Middle	-2.0%
High	High	-3.0%

Ext EEPROM

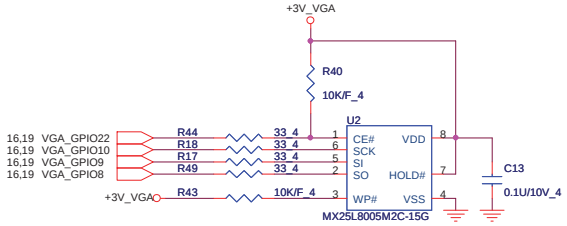

Thermal Sensor

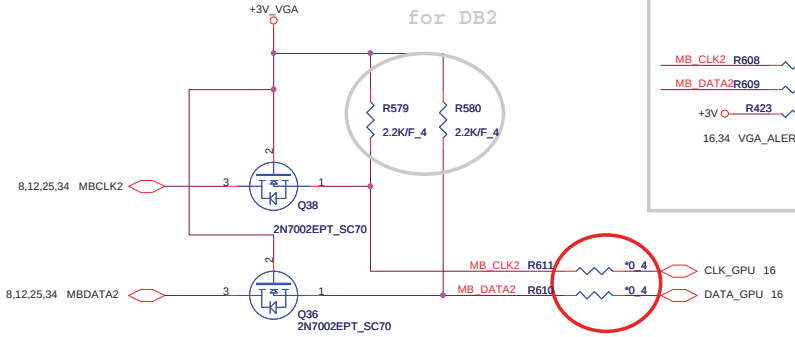

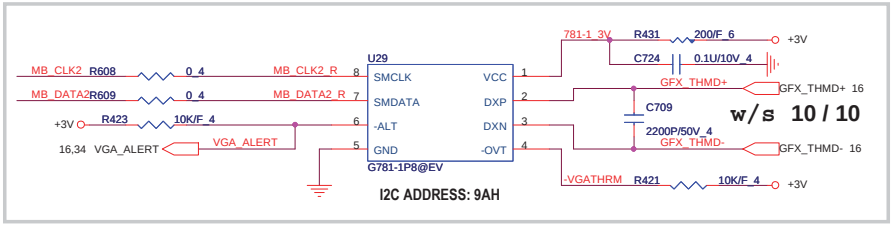

reserver for
internal thermal
SP8 1.1 DB

2,3,7,8,9,10,11,12,13,14,25,26,27,28,30,31,32,33,34,35,38,40,42 +3V
15,16,18,19,26,33,39 +3V_VGA

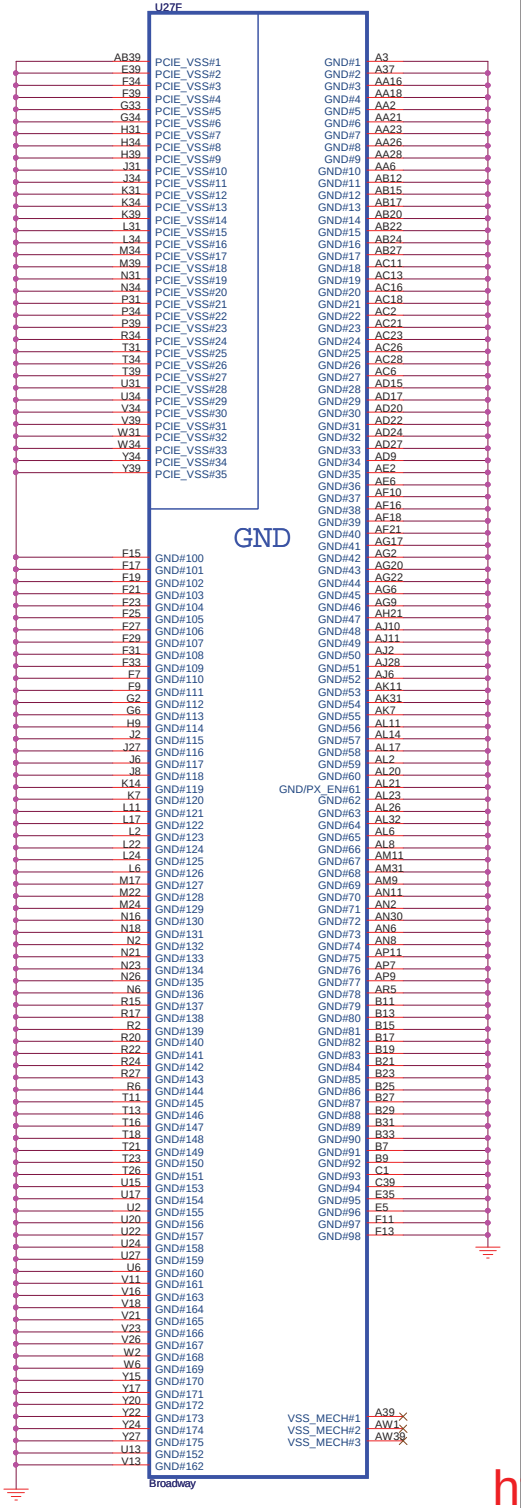

http://laptop-motherboard-schematic.blogspot.com/

NB5/RD2

PROJECT : SP8
Quanta Computer Inc.

Size	Document Number	Rev
Custom	ATI M97(GND&Str&Ther)4/5	3A

Date: Thursday, August 05, 2010 | Sheet 17 of 47

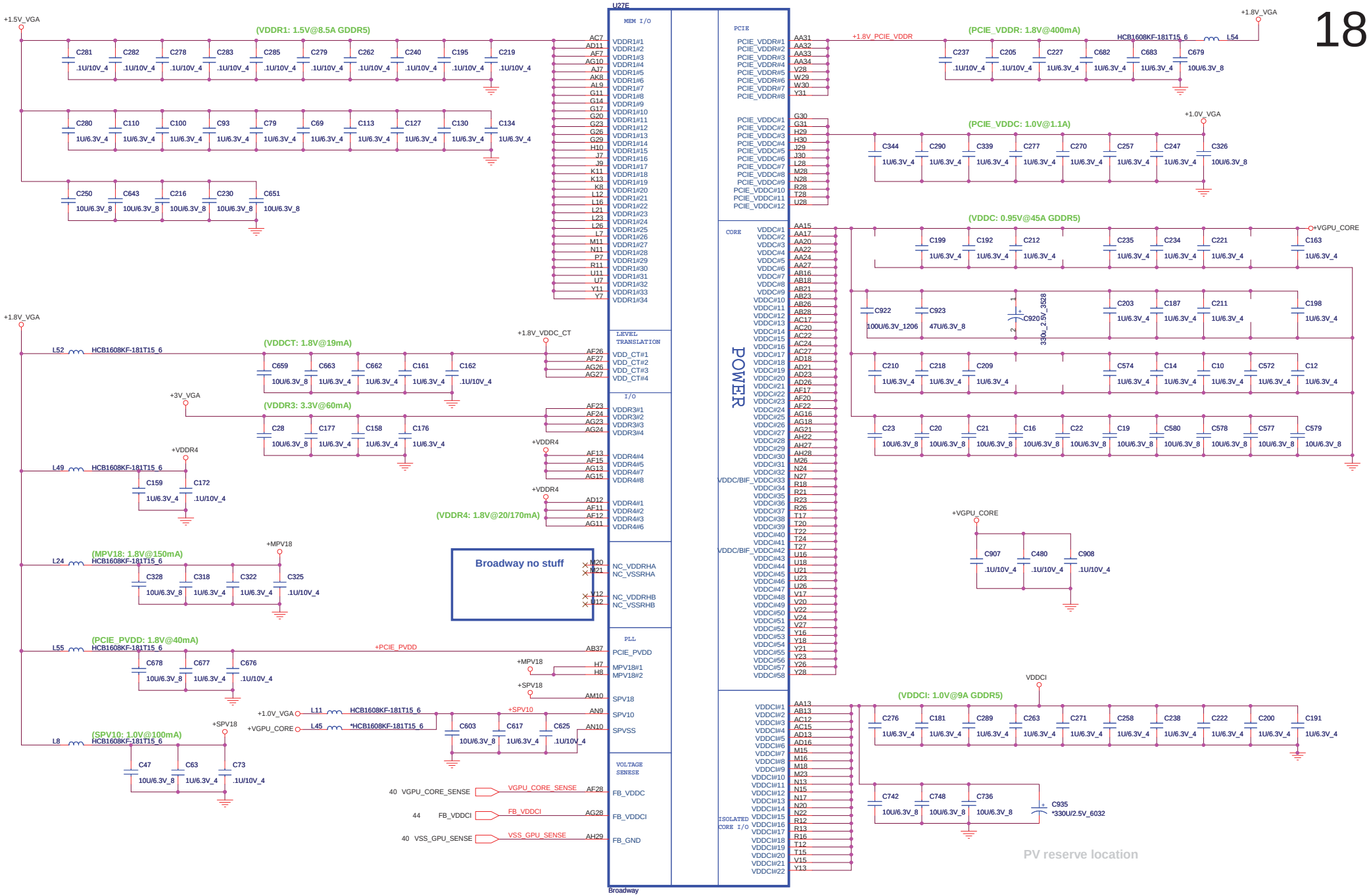

http://laptop-motherboard-schematic.blogspot.com/

PROJECT : SP8	
Quanta Computer Inc.	
Size: Custom	Document Number: ATI M97-M2 (POWER) 5/5
Rev: 3A	
Date: Thursday, August 05, 2010	Sheet 18 of 47
N85/RD2	

Straps

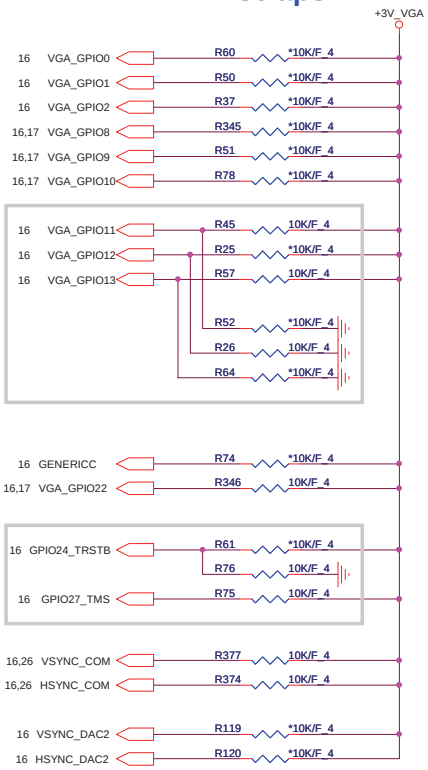

AMD
0911

Overlap pads to save space and to prevent assembly of both resistors.

Layout

Ground — High logic voltage

Signal

Strap Name	Pin Straps Description		Default Value
TX_PWRS_ENB	GPIO0	GPIO[1:0]:Recommend to pulling up for PICE setting. GPIO_0:PCIE full TX output swing	
TX_DEEMPH_EN	GPIO1	GPIO_1:PCIE Transmitter DE-EMPHASIS enabled	
BIF_GEN2_EN	GPIO2	GPIO_2:System is using PCIE GEN1 can be let it NC(ASIC internal pull down) if Gen2 just pull up for PCIE 5GT/s support. (0=PCIE GNE1,2.5GT/s ; 1=PCIE GNE2,5GT/s)	
STRAP_BIF_CLK_PM_EN	GPIO8		
CONFIG[3] CONFIG[2] CONFIG[1] CONFIG[0]	GPIO9 GPIO13 GPIO12 GPIO11		
BIOS_ROM_EN	GPIO22	BIOS_ROM_EN(GPIO22)=1, then Config[2:0]=GPIO[13:12:11] defines the ROM type. (See table as below)	
AUDIO[0]	VSYNC		
AUD(1)	HSYNC		
VSYNC_DAC2	V2SYNC		
HSYNC_DAC2	H2SYNC		
	GENERICC		

Table 3-34 ROM Configurations

Manufacturer	Part Number	Size	CONFIG[2:0]
Atmel	AT25F512	512 kbit	001
	AT25F512A	512 kbit	010
	AT25F1024	1 Mbit	011
	AT25F1024A	1 Mbit	011
	AT25F2048	2 Mbit	011
	AT25F4096	4 Mbit	011
ST Microelectronics	M25P05A	512 kbit	100
	M25P10A	1 Mbit	101
	M25P20	2 Mbit	101
	M25P40	4 Mbit	101
	M25P80	8 Mbit	101
Silicon Storage Technology	SST25VF512	512 kbit	010
	SST25VF010	1 Mbit	011
	SST25VF020	2 Mbit	011
	SST25VF040	4 Mbit	011
Winbond Electronics Corporation	W45B512	512 kbit	110
	W45B012	1 Mbit	111
YMC	Y25LF05	512 kbit	010
	SA25C020	2 Mbit	011
PMC	Pm25LV512	512 kbit	100
	Pm25LV010	1 Mbit	101

Default

NB5/RD2

PROJECT : SP8
Quanta Computer Inc.

Size	Document Number	Rev
Custom	VGA Core/+1.8VGFX/1.0VGFX	3A

Date: Thursday, August 05, 2010 Sheet 19 of 47

http://laptop-motherboard-schematic.blogspot.com/

1GB GDDR5 : CHANNEL A-0 (64M x 16)

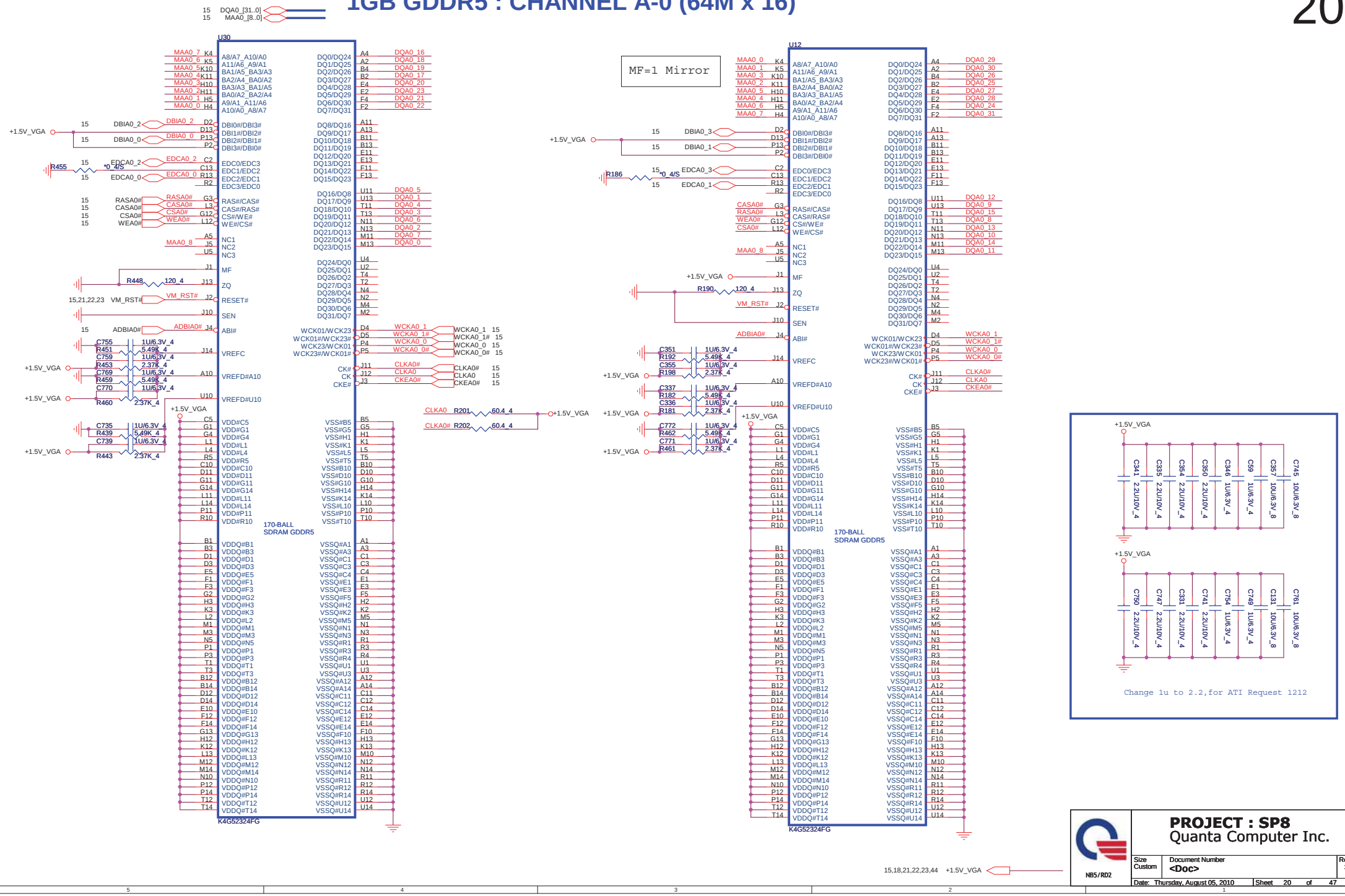

http://laptop-motherboard-schematic.blogspot.com/

1GB GDDR5 : CHANNEL A-1 (64M x 16)

MF=1 Mirror

Change 1u to 2.2,for ATI Request 1212

http://laptop-motherboard-schematic.blogspot.com/

PROJECT : SP8
Quanta Computer Inc.

Size: Custom | Document Number: <Doc> | Rev: 3A
Date: Thursday, August 05, 2010 | Sheet 21 of 47

1GB GDDR5 : CHANNEL B-0 (64M x 16)

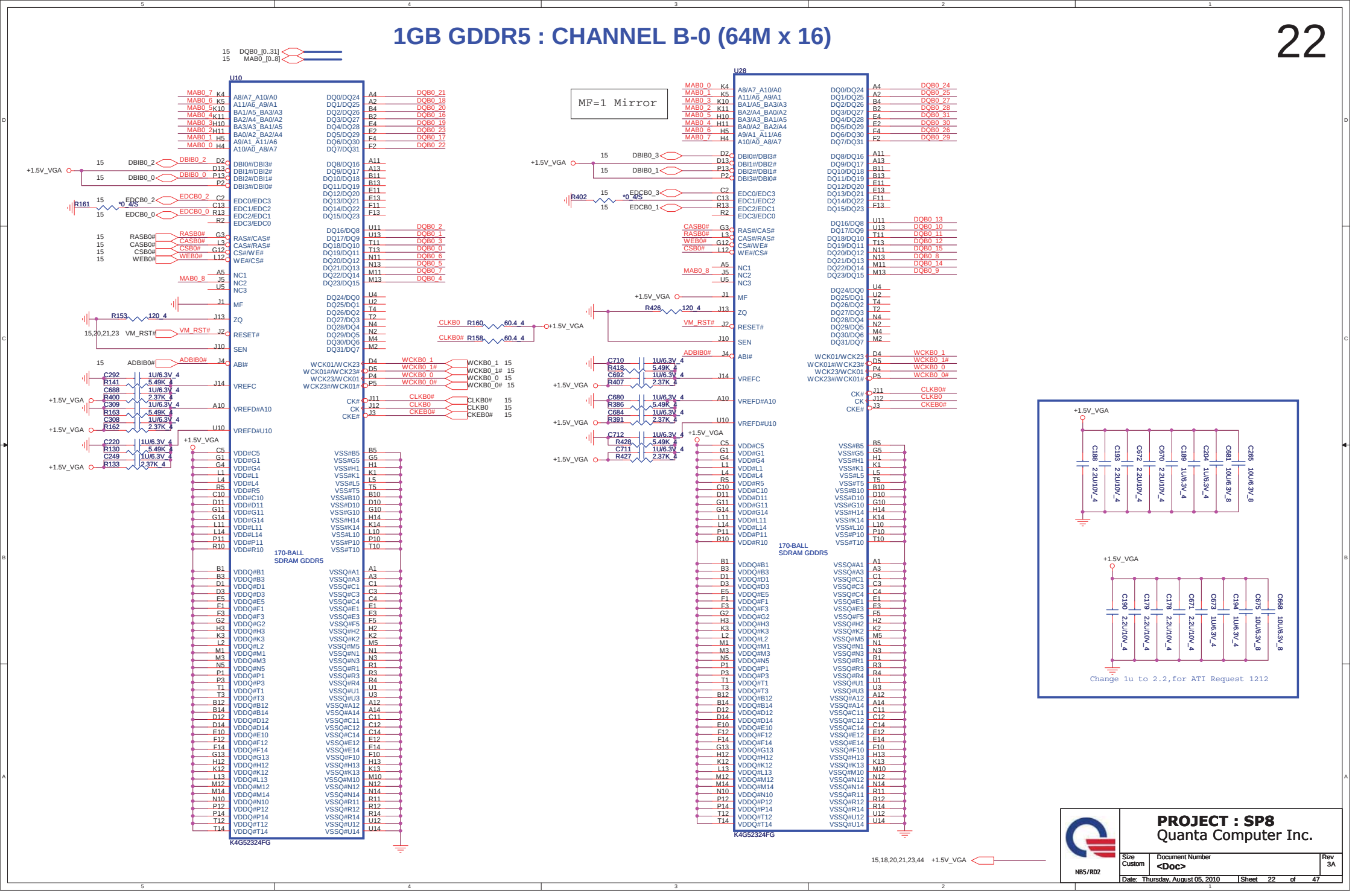

http://laptop-motherboard-schematic.blogspot.com/

1GB GDDR5 : CHANNEL B-1 (64M x 16)

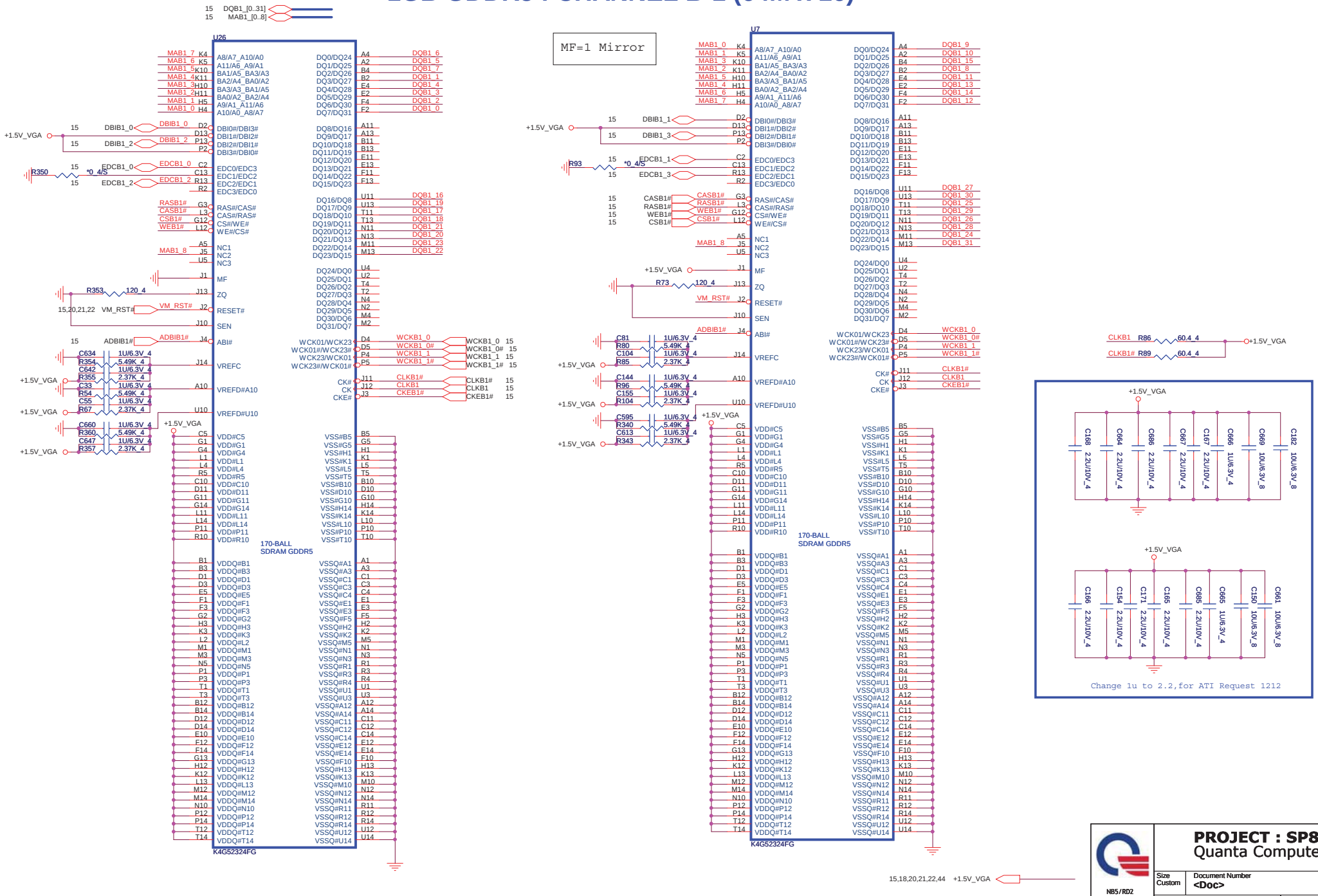

http://laptop-motherboard-schematic.blogspot.com/

PROJECT : SP8
Quanta Computer Inc.

Size	Document Number	Rev
Custom	<Doc>	3A

Date: Thursday, August 05, 2010 Sheet 23 of 47

NB5/RD2

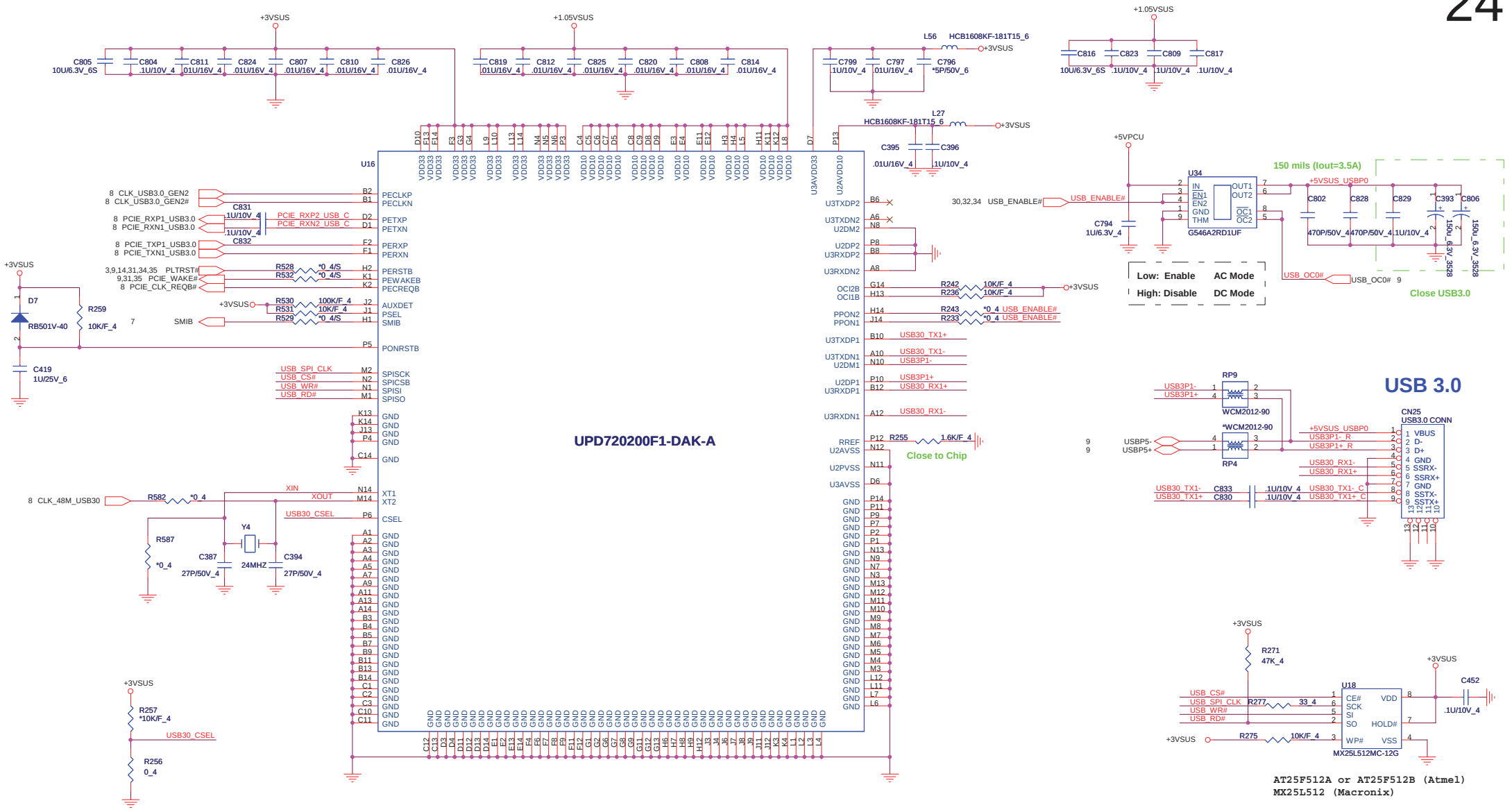

http://laptop-motherboard-schematic.blogspot.com/

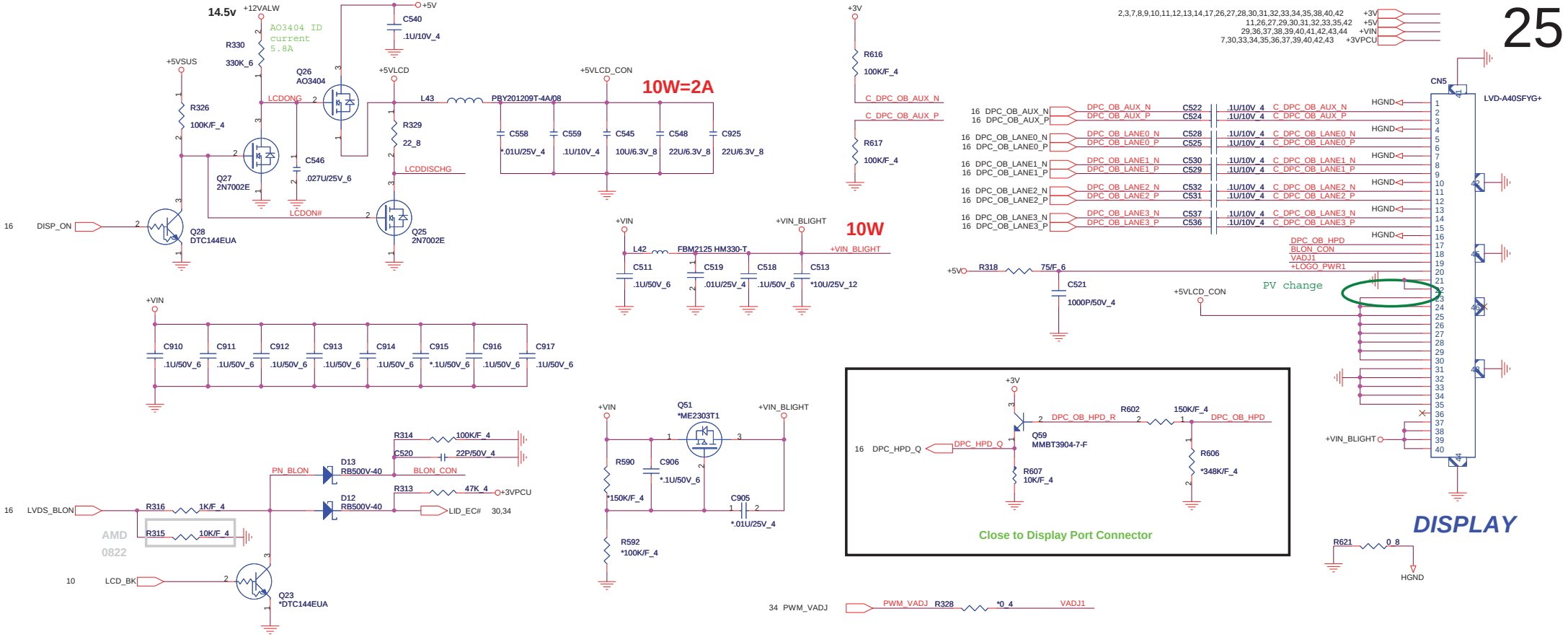

PWM control

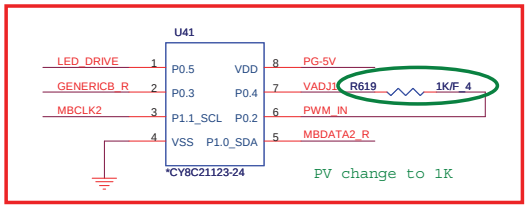

Co-lay Crypress
SP8 1.1 DB

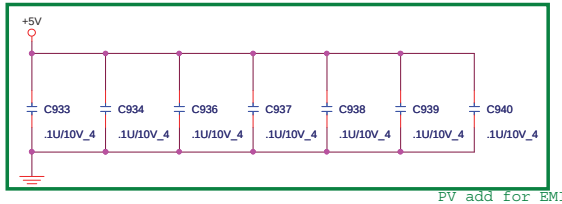

PV add for EMI solution

SP8 1.1 change
from 0402 to 0603

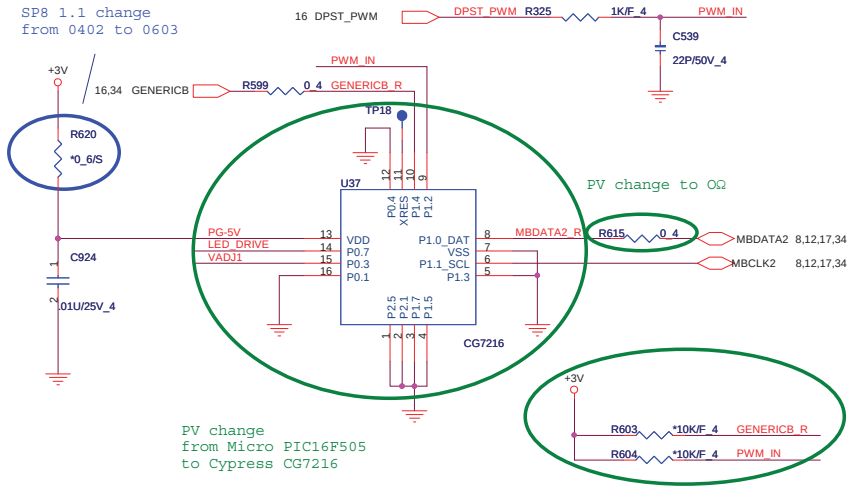

IR control

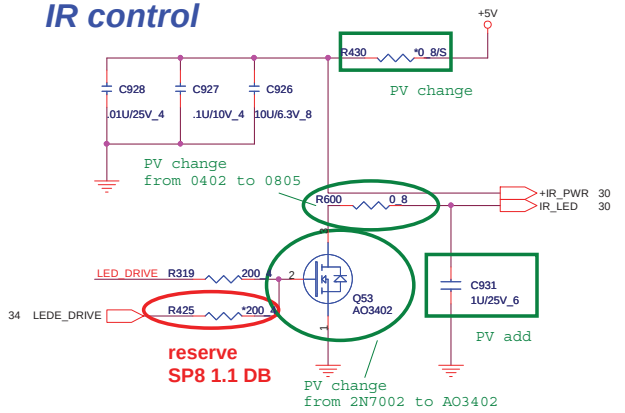

NB5/RD2	PROJECT : SP8 Quanta Computer Inc.	
Size: Custom	Document Number: LCD CONN/LID function	Rev: 3A
Date: Thursday, August 05, 2010	Sheet 25 of 47	

http://laptop-motherboard-schematic.blogspot.com/

CRT

+5VCRT C561 1U/10V_4
F1 FUSE1A6V_POLY 40 mils 40 mils
+5V +5VCRT
SSM14 spec is 40V 1A

16 CRT_R_CON → CRT_R_CON → L51 BLM18BA470SN1D → CRT_R1
16 CRT_G_CON → CRT_G_CON → L15 BLM18BA470SN1D → CRT_G1
16 CRT_B_CON → CRT_B_CON → L14 BLM18BA470SN1D → CRT_B1

R362 150/F_4 R84 150/F_4 R79 150/F_4
C658 6.8P/50V_4 C106 6.8P/50V_4 C89 6.8P/50V_4
C632 6.8P/50V_4 C637 6.8P/50V_4 C646 6.8P/50V_4

CN15

+5V C43 1U/10V_4
16,19 VSYNC_COM → U4 M74VHC1GT125DF2G → CRTVSYNC_1
16,19 HSYNC_COM → U6 M74VHC1GT125DF2G → CRTHSYNC_1

R39 *0_4/S CRTVSYNC_2
R59 *0_4/S CRTHSYNC_2
R23 *0_4/S DDCCLK3
R27 *0_4/S DDCDAT3

C570 *470P/50V_4 C592 *47P/50V_4 C611 *47P/50V_4 C582 *470P/50V_4

+3V R334 10K/F_4
16 DDCCLK_COM → DDCCLK_COM → Q30 2N7002EPT → DDCCLK2
+3V R335 10K/F_4
16 DDCDATA_COM → DDCDATA_COM → Q31 2N7002EPT → DDCDAT2

R24 2.2K_4 R28 2.2K_4
D14 RB501V-40 +5VCRT +5V_CRT2

inputs		function
/E	SET	
L	L	Y - port 0
L	H	Y - port 1
H	X	Disconnect

+3V
D21 *BAV99W CRT_R_CON
D20 *BAV99W CRT_G_CON
D19 *BAV99W CRT_B_CON
+5V
D15 *BAV99W DDCCLK_COM
D16 *BAV99W DDCDATA_COM
D18 *BAV99W HSYNC_COM
D17 *BAV99W VSYNC_COM

+5V 11,25,27,29,30,31,32,33,35,42
+3V 2,3,7,8,9,10,11,12,13,14,17,25,27,28,30,31,32,33,34,35,38,40,42
+3V_VGA 15,16,17,18,19,33,39

HDMI

Close to HDMI Connector

+5V_HDMVCC
+3V_VGA
D22 CH501H-40PT
R185 10K/F_4 R193 2.2K_4
16 HDMI_SCL → Q13 2N7002E → HDMI_SCLK
R191 *0_4

D23 CH501H-40PT
R200 10K/F_4 R195 2.2K_4
16 HDMI_SDA → Q14 2N7002E → HDMI_SDATA
R197 *0_4

+5V
Q42 2N7002E
R457 100K/F_4

R469 499/F_4 C_TX2_HDMI+
R467 499/F_4 C_TX2_HDMI-
R464 499/F_4 C_TX1_HDMI+
R463 499/F_4 C_TX1_HDMI-
R466 499/F_4 C_TX0_HDMI+
R465 499/F_4 C_TX0_HDMI-
R458 499/F_4 C_TXC_HDMI+
R456 499/F_4 C_TXC_HDMI-

Close to HDMI Connector

+3V_VGA
16 TMDS_HPD → Q41 MMBT3904-7-F
HDMI_DET_R R442 150K/F_4 HDMI_DET
R444 10K/F_4 R446 *348K/F_4

16 N_TX2_HDMI+ → C371 .1U/10V_4 → C_TX2_HDMI+
16 N_TX2_HDMI- → C368 .1U/10V_4 → C_TX2_HDMI-
16 N_TX1_HDMI+ → C364 .1U/10V_4 → C_TX1_HDMI+
16 N_TX1_HDMI- → C362 .1U/10V_4 → C_TX1_HDMI-
16 N_TX0_HDMI+ → C367 .1U/10V_4 → C_TX0_HDMI+
16 N_TX0_HDMI- → C365 .1U/10V_4 → C_TX0_HDMI-
16 N_TXC_HDMI+ → C361 .1U/10V_4 → C_TXC_HDMI+
16 N_TXC_HDMI- → C360 .1U/10V_4 → C_TXC_HDMI-

CN21 HDMI CONN
SHELL1 SHELL3 SHELL4 SHELL2
D2+ D2 Shield D2- D1+ D1 Shield D1- D0+ D0 Shield D0- CK+ CK Shield CK- CE Remote NC DDC CLK DDC DATA GND +5V HP DET
HDMI_SCLK HDMI_SDATA +5V_HDMVCC HDMI_DET

F2 FUSE1A6V_POLY
+5V C762 *0.1U/10V_4

NB5/RD2

PROJECT : SP8
Quanta Computer Inc.

Size	Document Number	Rev
Custom	CRT/HDMI Conn	3A
Date: Thursday, August 05, 2010	Sheet 26 of 47	

http://laptop-motherboard-schematic.blogspot.com/

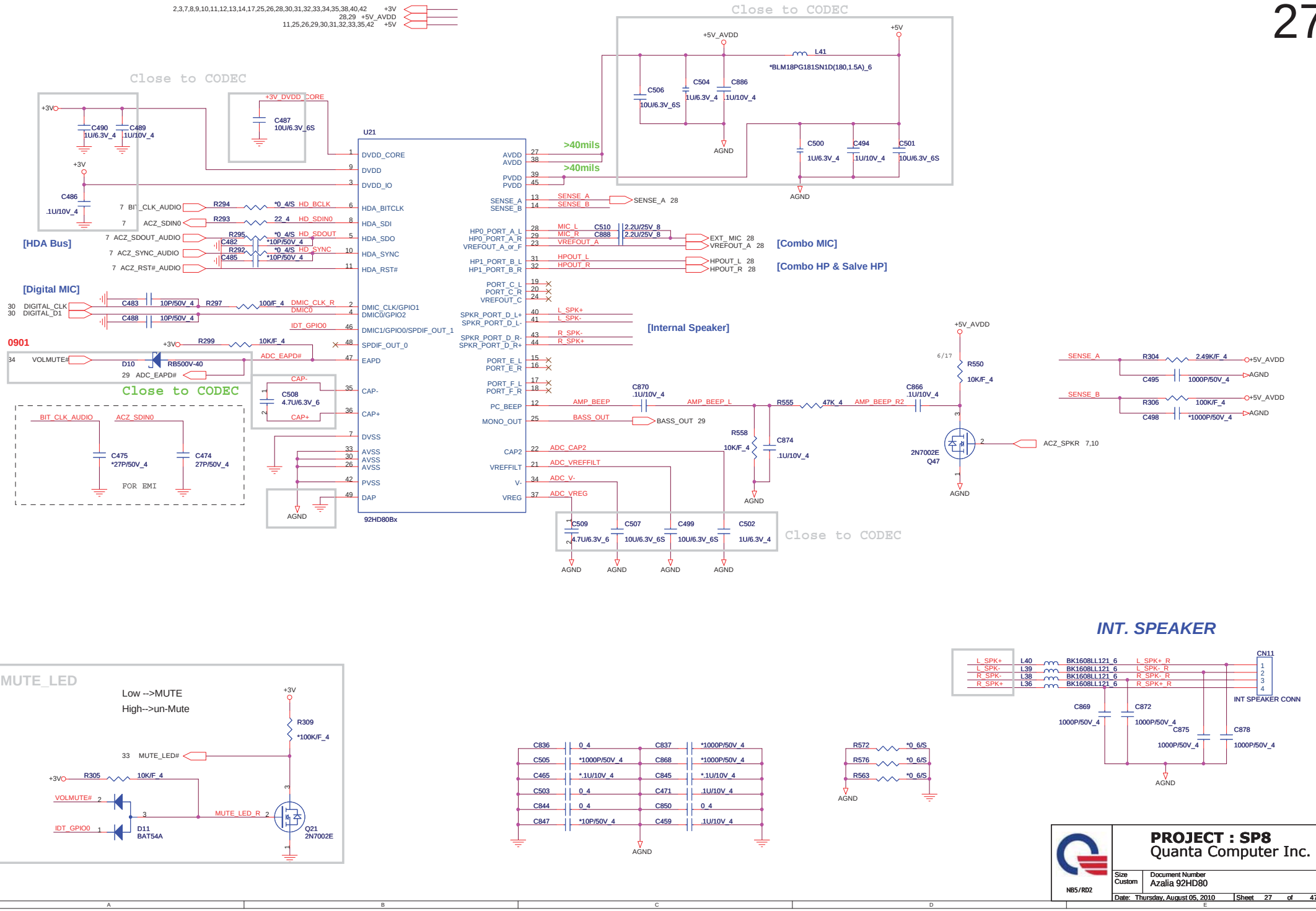

http://laptop-motherboard-schematic.blogspot.com/

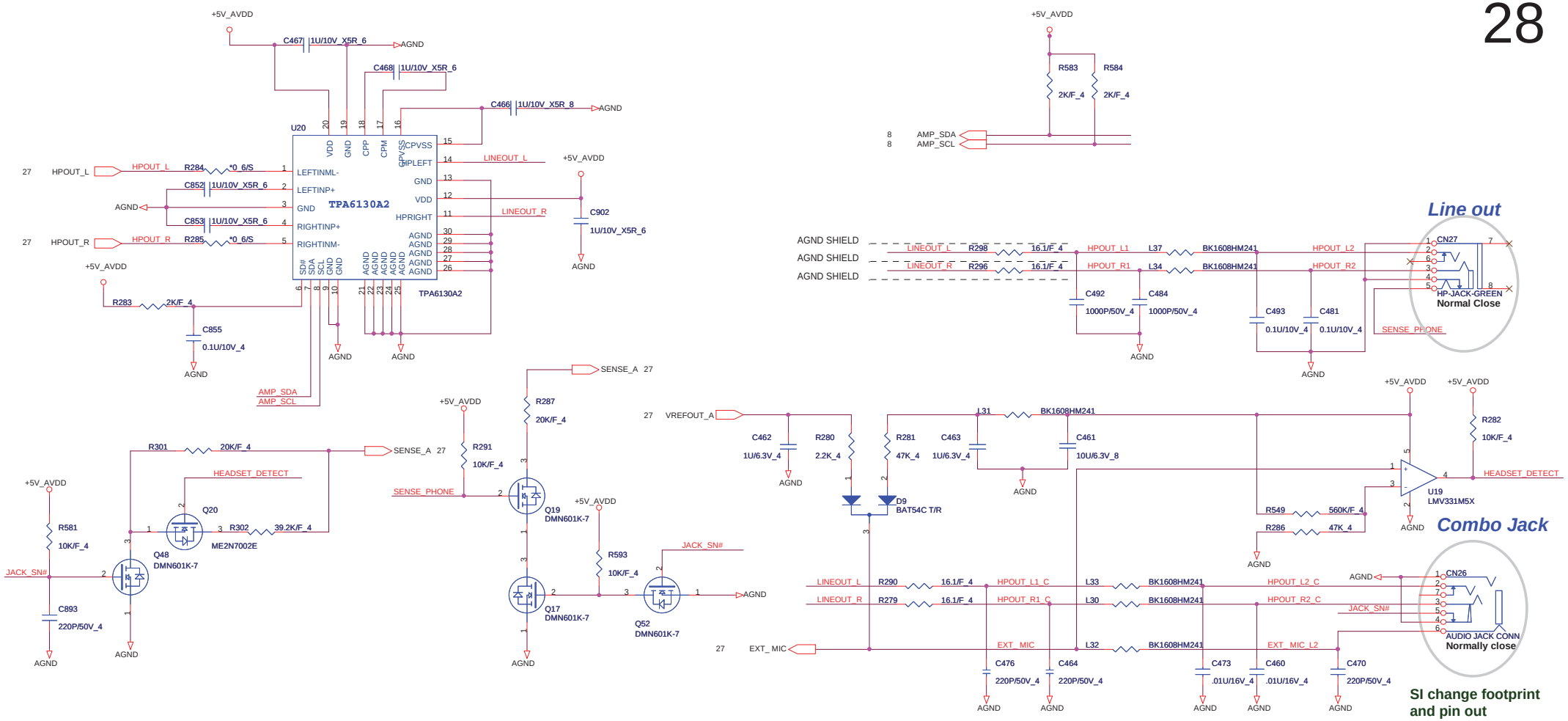

PROJECT : SP8
Quanta Computer Inc.

Size	Document Number	Rev
Custom	AMP_TPA6047/Accelerometer	3A

NB5/RD2

Date: Thursday, August 05, 2010 Sheet 28 of 47

http://laptop-motherboard-schematic.blogspot.com/

SUBWOOFER

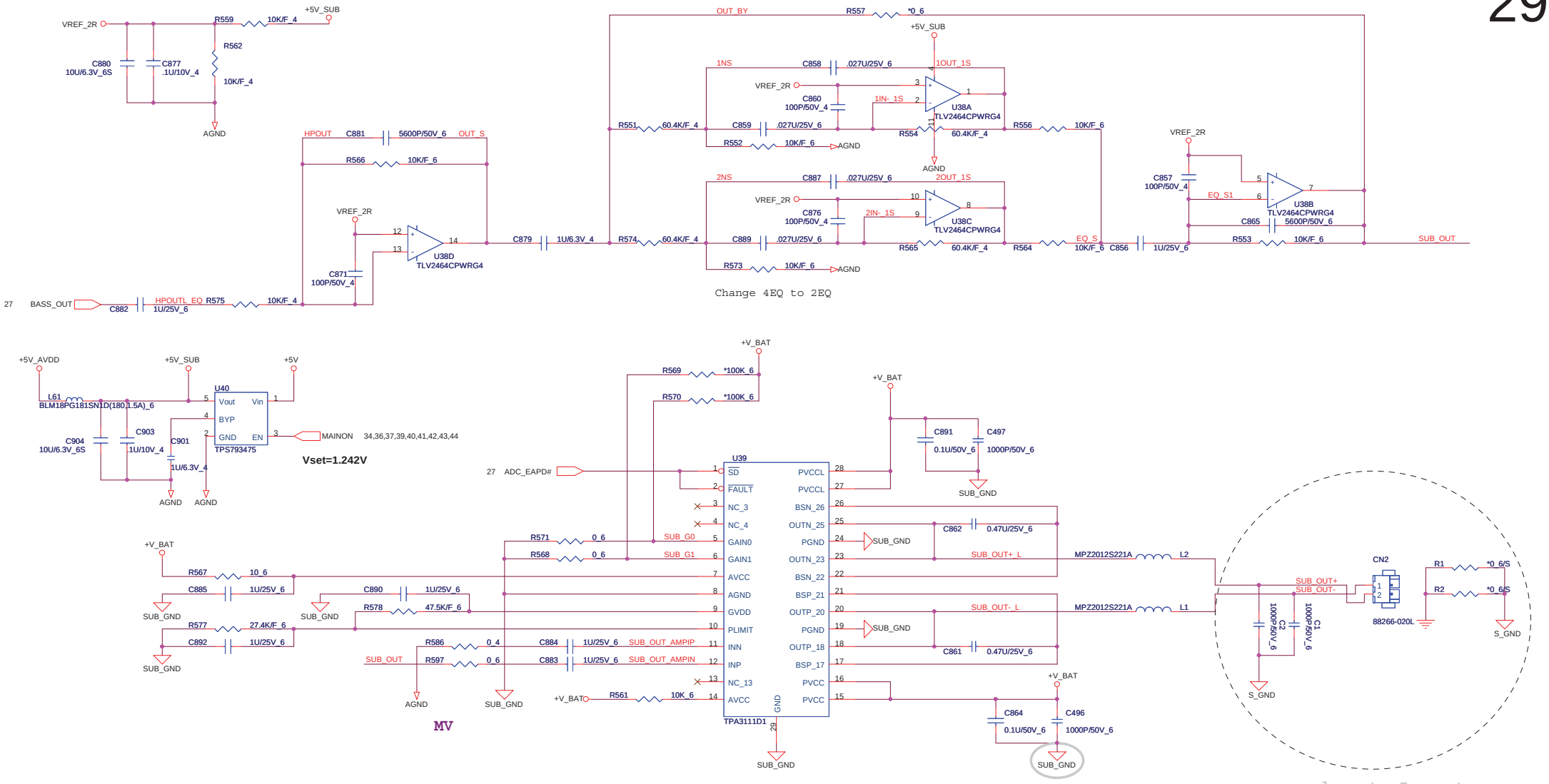

Change 4EQ to 2EQ

MV

close to Connect

Sub-Woofer power

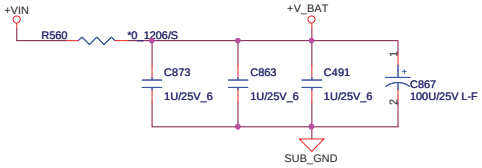

GAIN1	GAIN0	dB
0	0	20
0	1	26
1	0	32
1	1	36

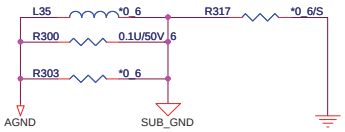

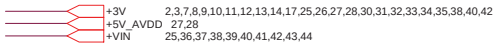

PROJECT : SP8
Quanta Computer Inc.

Size	Document Number	Rev
Custom	SUBWOOFER (EQ & AMP.)	3A

NB5/RD2

Date: Thursday, August 05, 2010 Sheet 29 of 47

http://laptop-motherboard-schematic.blogspot.com/

Bluetooth

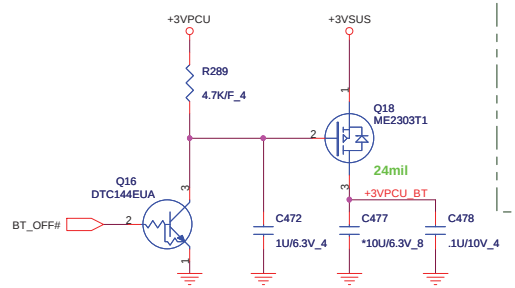

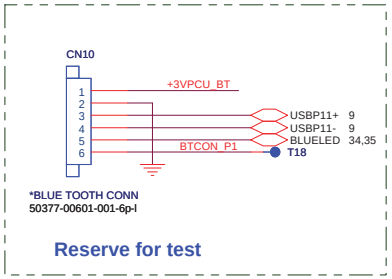

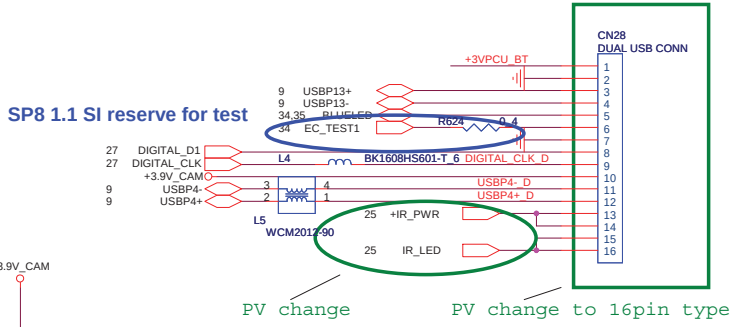

Webcam support

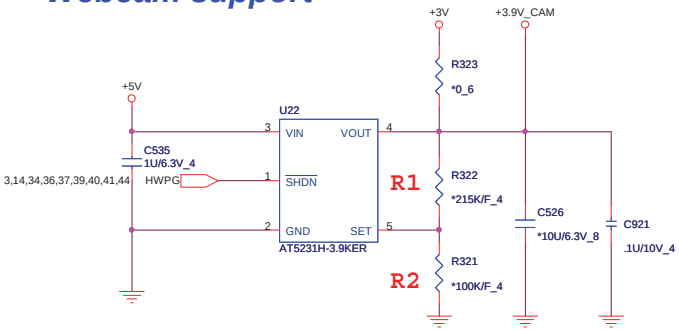

Vout=1.25(1+R1/R2)

Ext USB & Card Reader

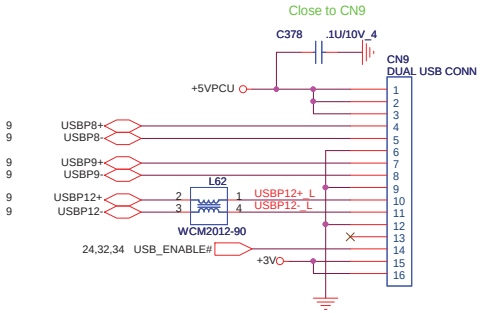

Touch Pad Botton

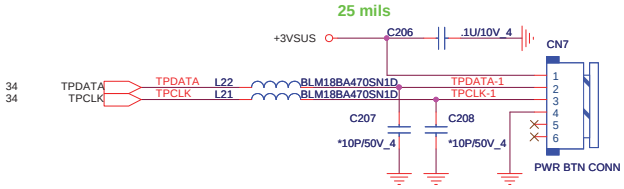

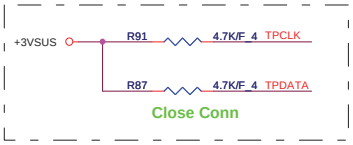

Power Botton

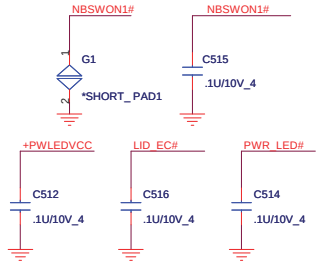

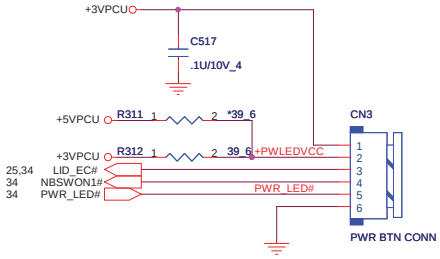

1. +3VPCU(LIDSWITCH PWR)
2. LEDVCC(+3VPCU)
3. LIDSWITCH
4. POWERON#
5. PWRLED#
6. GND

PROJECT : SP8
Quanta Computer Inc.

Size	Document Number	Rev
Custom	BT/WC/FT/Touchscreen	3A

NB5/RD2

Date: Thursday, August 05, 2010 Sheet 30 of 47

http://laptop-motherboard-schematic.blogspot.com/

T : Stuffed for RTL8111DL(10/100/1000)

for RTL8111DL use

for RTL8111DL use close Pin 44,45

+CTRL12DVDD — +CTRL12DVDD — C366 22U/6.3V_8 — C775 0.1U/10V_4 — R468 *0_6/S short0603 — +3V_LAN

Remove R3571,R3573

R3571 and R3573 are used in RTL8111DL , remove R3573 if switching regulator is enable , Remove R3571 external power is used.

+3VLANVCC — R470 *0_8/S short0805 — +3V_LAN

C777 0.1U/10V_4 — C776 0.1U/10V_4 — C778 0.1U/10V_4 — C768 0.1U/10V_4

Close to PIN 1

AL08111DB00 RTL8111DL-GR

Y3 25MHZ — C376 33P/50V_4 — C370 33P/50V_4 — XTAL1 — XTAL2

+CTRL12DVDD — R204 2.49K/F_4 — LANRSET — ENSWREG

+3V_LAN — +DVDD12_LAN — +CTRL12A — LAN_TX# — +3V_LAN

U14 RTL8103EL/8111DL

AVDD33 MDIP0 MDIN0 NC/FB12 MDIP1 MDIN1 GND1 NC/MDIP2 NC/MDIN2 DVDD12/AVDD12 NC/MDIP3 NC/MDIN3

VCTRL12A/SROUT12 GND4 RSET VCTR12DVDDSR NC/ENSWREG NC/SWREG CKTAL2 CKTAL1 NC/AVDD33 NC/LV_PLL LED0 VDD33B

DVDD12B LED1/EESK LED2/EEDI LED3/EEDO EECS GND3 DVDD12A VDD33A ISOLATEB PERSTB LANWAKEB CLKREQB

DVDD12 GND2 HSIP HSIN REFCLK_P REFCLK_N EVDD12 HSOP HSON EGND NC/GPO NC/NC

LAN_GLINK100# — LAN_GLINK10# — R207 3.6K_6 — +3V_LAN — +DVDD12_LAN — +3V_LAN

EECS — T14

ISOLATEB — PLTRST# R# — R205 *0_4/S — PLTRST# 3,9,14,24,34,35 — PCIE_WAKE# 9,24,35 — PCIE_CLK_REQ3# 8

+DVDD12_LAN — EVDD12

8 PCIE_TXP1_LAN — PCIE_TXP6_LAN

8 PCIE_TXN1_LAN — PCIE_TXN6_LAN

8 CLK_PCIE_LAN — CLK_PCIE_LAN

8 CLK_PCIE_LAN# — CLK_PCIE_LAN#

PCIE_RXN1_LAN_L C374 0.1U/10V_4 — PCIE_RXN1_LAN 8

PCIE_RXP1_LAN_L C372 0.1U/10V_4 — PCIE_RXP1_LAN 8

+3V — R208 *1K/F_4 — ISOLATEB — R209 100_4 — LAN_DISABLE# 10,34

R206 15K/F_4 — *RB501V-40 D5

if ISOLATEB pin pull-low,the LAN chip will not drive it's PCI-E outputs (excluding PCIE_WAKE# pin)

U32 NS892405

C766 .01U/16V_4 — V_DAC0 — MDI0+ — MDI0- — TCT1 TD1+ TD1- MCT1 MX1+ MX1-

C765 .01U/16V_4 — V_DAC1 — MDI1+ — MDI1- — TCT2 TD2+ TD2- MCT2 MX2+ MX2-

C764 .01U/16V_4 — V_DAC2 — MDI2+ — MDI2- — TCT3 TD3+ TD3- MCT3 MX3+ MX3-

C763 .01U/16V_4 — V_DAC3 — MDI3+ — MDI3- — TCT4 TD4+ TD4- MCT4 MX4+ MX4-

LAN_MCT0 — C734 0.01U/100V_0603 — R433 75/F_4 — LAN_MX0+ — LAN_MX0-

LAN_MCT1 — C733 0.01U/100V_0603 — R432 75/F_4 — LAN_MX1+ — LAN_MX1-

LAN_MCT2 — C732 0.01U/100V_0603 — R436 75/F_4 — LAN_MX2+ — LAN_MX2-

LAN_MCT3 — C731 0.01U/100V_0603 — R435 75/F_4 — LAN_MX3+ — LAN_MX3-

C323 1000P/3KV_1808

LAN_GLINK100# — LAN_White# — LAN_TX# — LAN_Amber# — Link

C381 *.01U/16V_4 — C375 *.01U/16V_4

NS892402:GIGABIT DB0AT9LAN05

>60mil — +CTRL12A — L25 4.7UH_8 — >60mil — +CTRL12A_L

Power trace Layout 寬度> 60mil

L23
RTL8111DL (Gaga lan) use 4.7uH
power choke A>600mA tolerance
±15%

C359 22U/6.3V_8 — C373 0.1U/10V_4

EVDD12 — Close to 8111DL DVDD12 pins-- 19 — C363 1U/10V_4 — C380 1U/10V_4

+DVDD12_LAN — C773 0.1U/10V_4 — C369 0.1U/10V_4 — C379 0.1U/10V_4 — C779 0.1U/10V_4 — C774 0.1U/10V_4

Close to 8111DL DVDD12 pins-- 10, 13, 30, 36, 39.

PV Stuff for EMI solution

RJ45

+3V_LAN — R380 *30_4 — C674 .1U/10V_4 — CN17

+5V — R596 100_4

LAN_White# — LAN_White — LED_White_N — LED_White_P

White is Link,Amber is active

LAN_MX3- LAN_MX3+ LAN_MX1- LAN_MX2- LAN_MX2+ LAN_MX1+ LAN_MX0- LAN_MX0+ FOR EMI

RX1- RX1+ RX0- TX1- TX1+ RX0+ TX0- TX0+ GND GND GND GND

+3V_LAN — R419 56_4 — LAN_Amber# — LAN_Amber — LED_Amber_N — LED_Amber_P

C693 .1U/10V_4 — RJ45_CONN

PV Stuff for EMI solution

PROJECT : SP8
Quanta Computer Inc.

Size	Document Number	Rev
Custom	8103E/RJ45	3A
Date: Thursday, August 05, 2010	Sheet 31 of 47	

NB5/RD2

http://laptop-motherboard-schematic.blogspot.com/

SATA CD-ROM

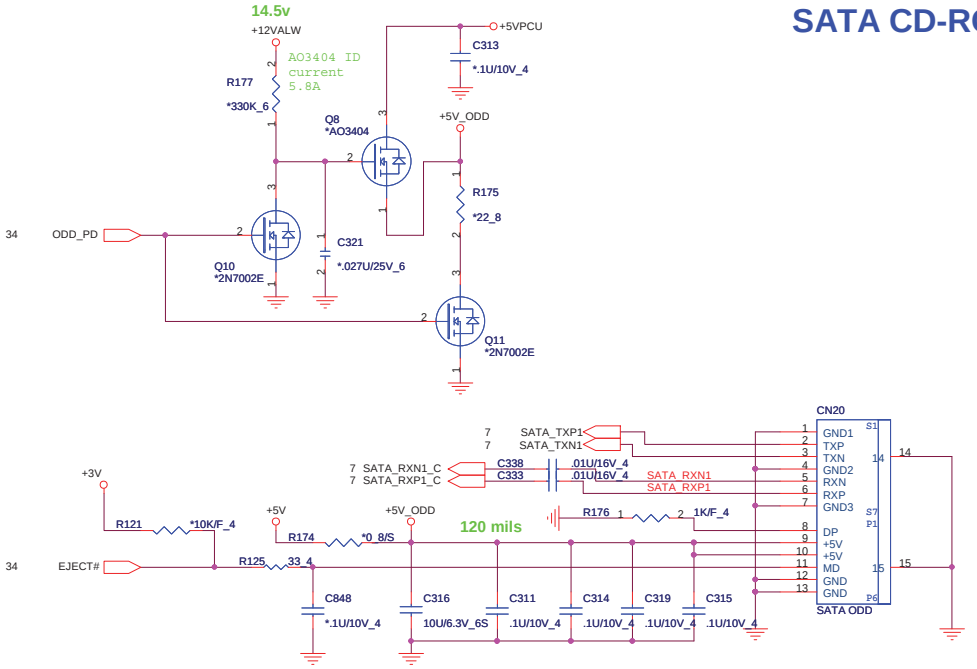

E-SATA

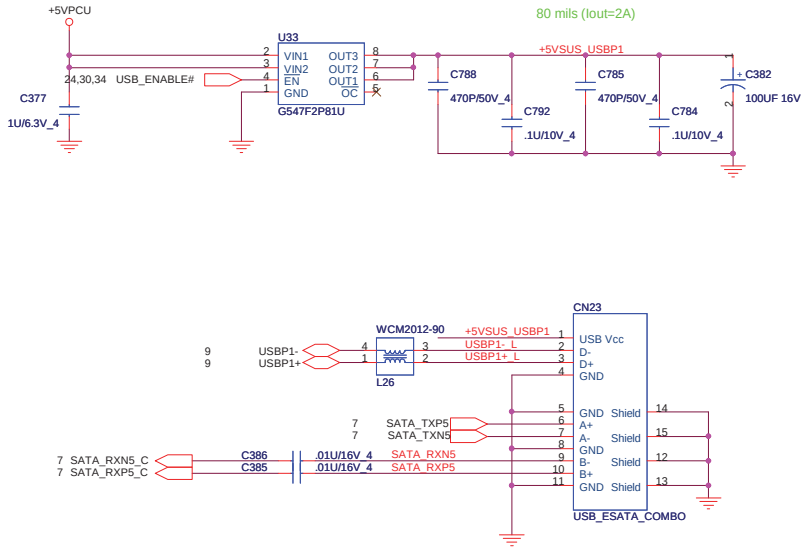

SATA HDD #1

SI change pin define and footprint (the same AX)

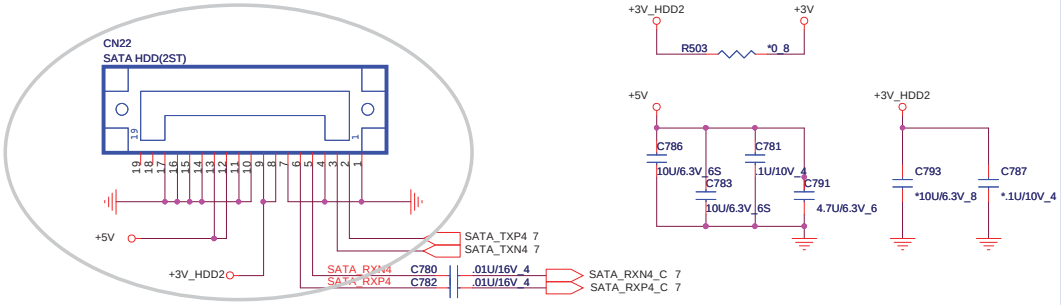

SATA HDD #2

SI change pin define and footprint (the same AX)

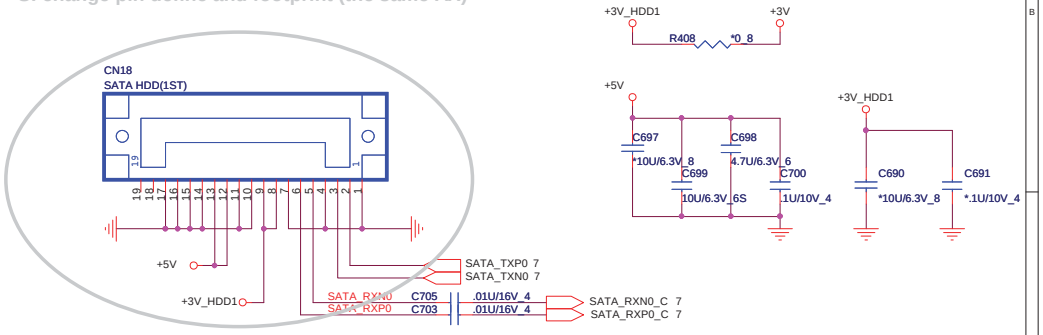

NB5/RD2	PROJECT : SP8 Quanta Computer Inc.	
Size: Custom	Document Number: ODD/HDD/ONFI	Rev: 3A
Date: Thursday, August 05, 2010	Sheet 32 of 47	

http://laptop-motherboard-schematic.blogspot.com/

Mini Display

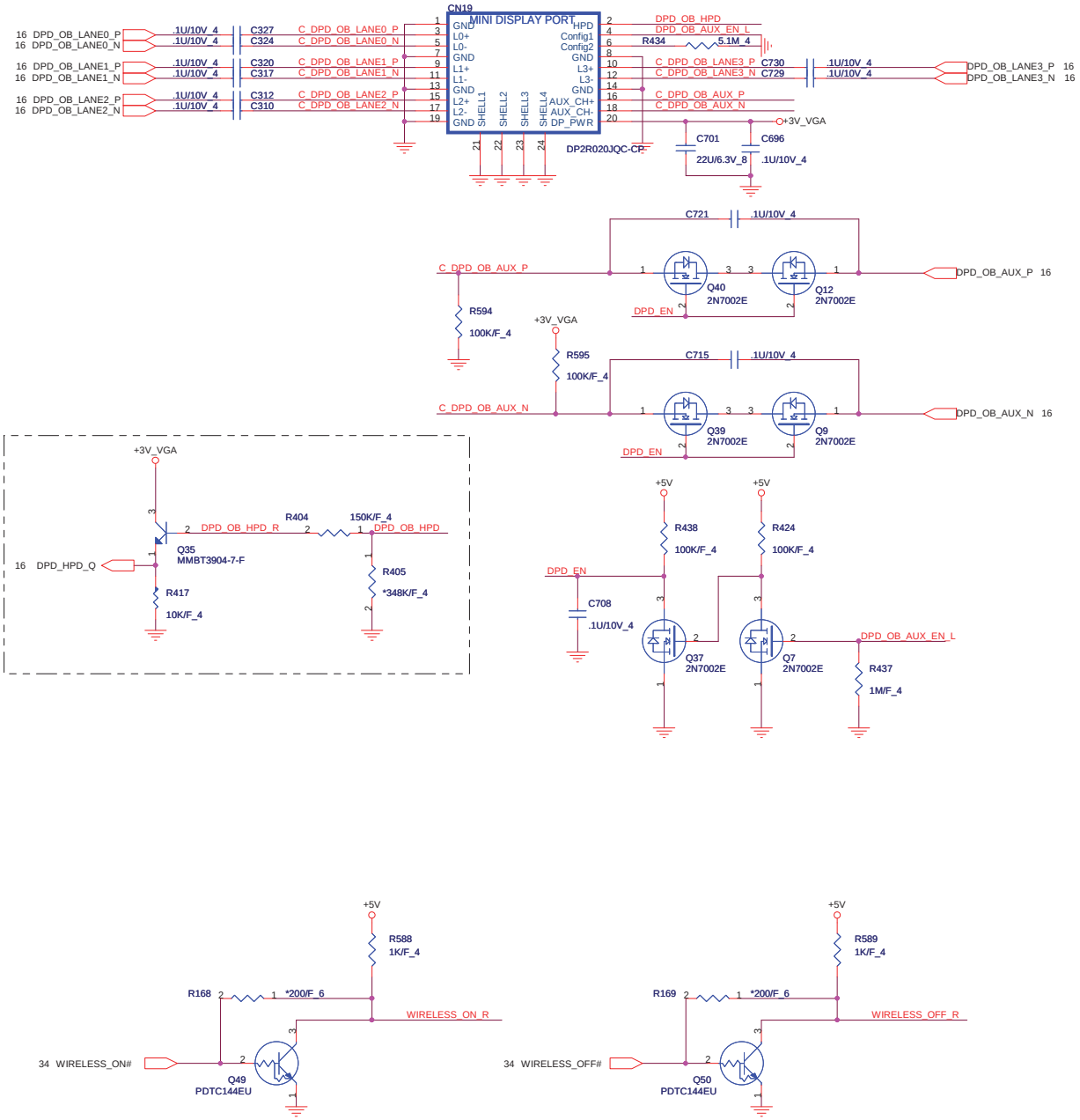

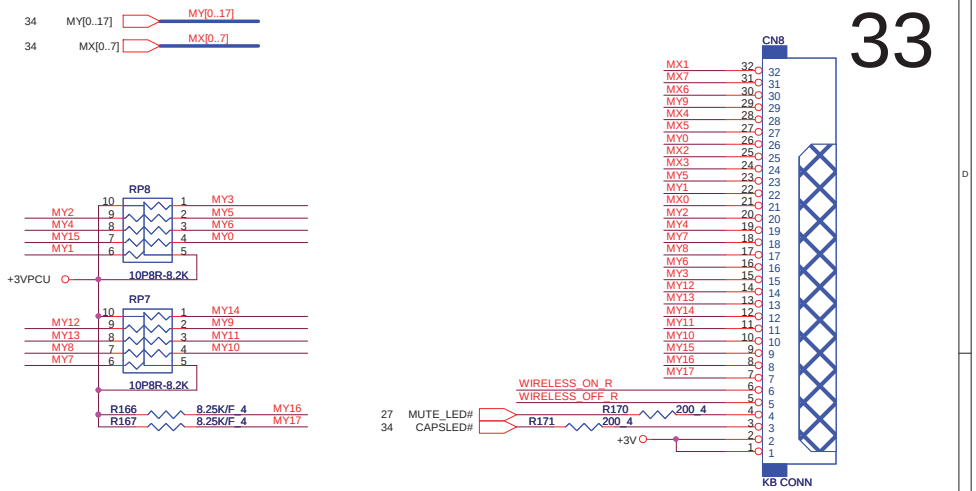

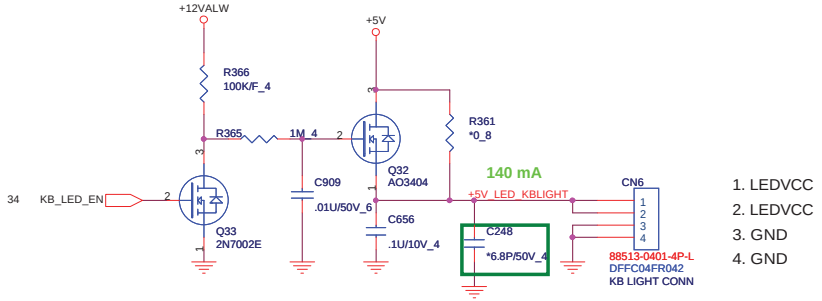

PV for RF solution

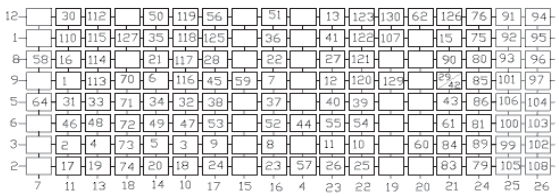

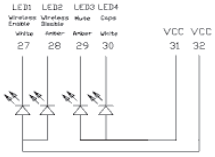

PROJECT : SP8
Quanta Computer Inc.

Size	Document Number	Rev
Custom	KB/LED/POWER CONN	3A

NB5/RD2

Date: Thursday, August 05, 2010 | Sheet 33 of 47

http://laptop-motherboard-schematic.blogspot.com/

Adapter Type

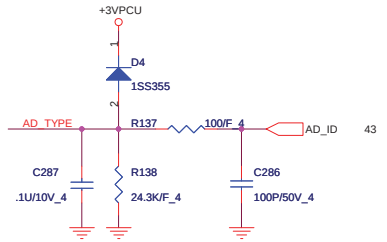

R273
64.9K -->65W CS36492FB17
33.2K -->90W CS33322FB13
Change to 1SS355 as Current loss

Thermal Shutdown

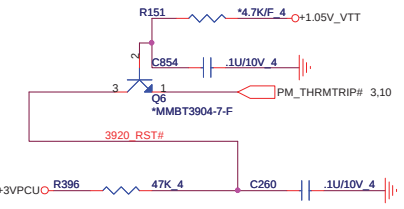

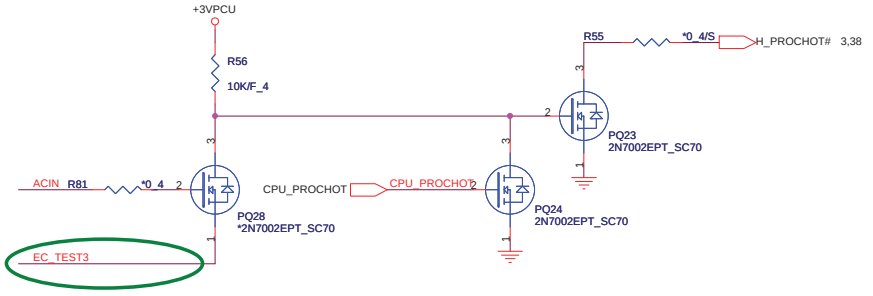

for SP8 1.1 PV EC request

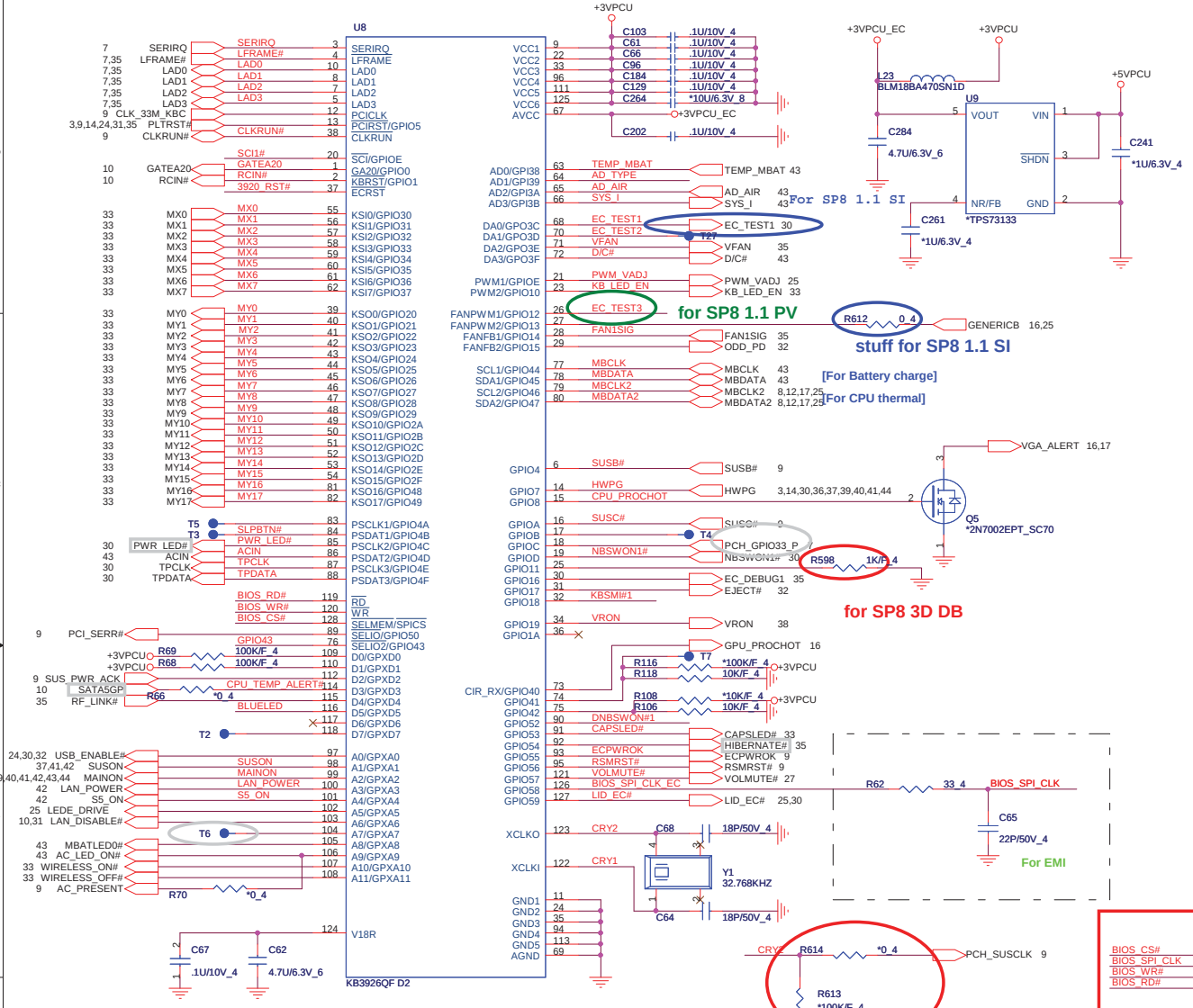

	GPIO41
SI	1
PV	0

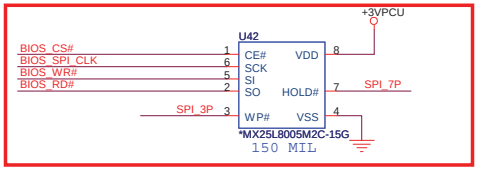

CO-LAYOUT SP8 1.1 DB

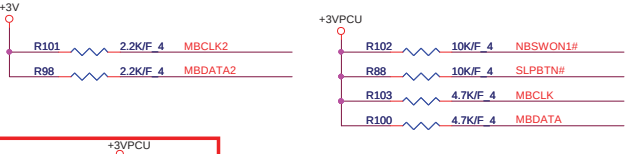

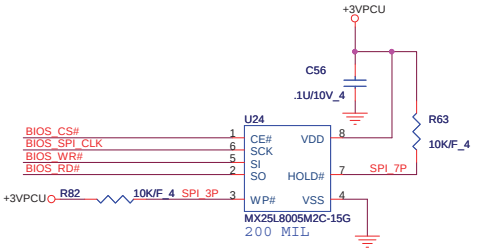

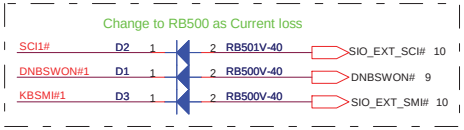

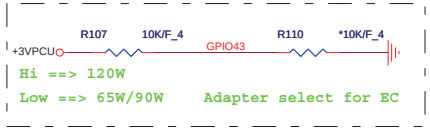

PROJECT : SP8	Quanta Computer Inc.
Size: Custom	Document Number: KB3926/ROM/TP
Rev: 3A	
Date: Thursday, August 05, 2010	Sheet 34 of 47

NB5/RD2

http://laptop-motherboard-schematic.blogspot.com/

Mini PCI-E Card 1
WLAN

0815 PV reserve for support Wi-max

[EC Debug]

[EC Debug pin]

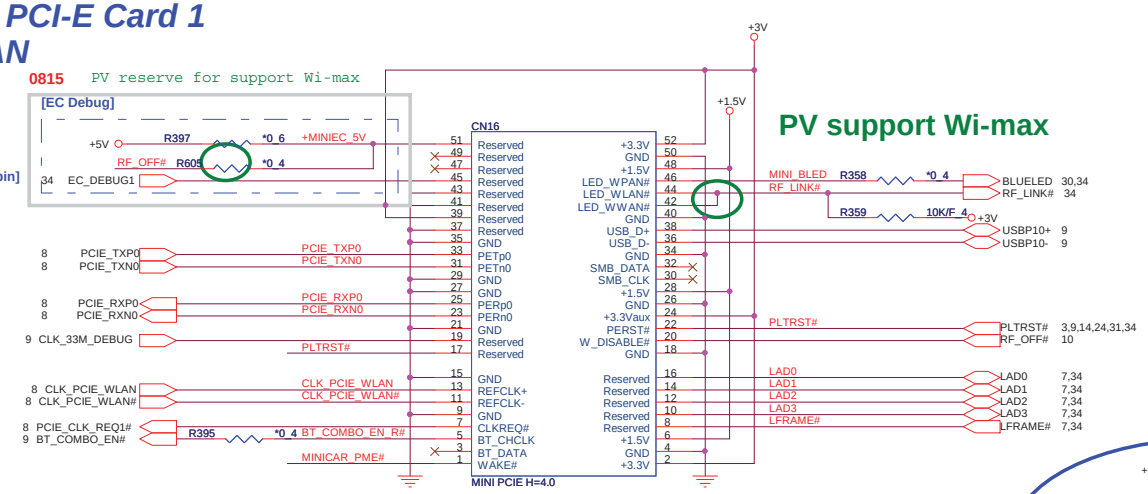

BT_DATA,BT_CHCLK,CLKREQ#,W_DISABLE# pin has internal pull-Down 100k resister.

PV support Wi-max

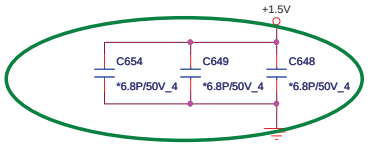

PV for RF solution

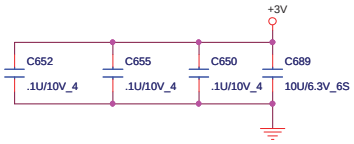

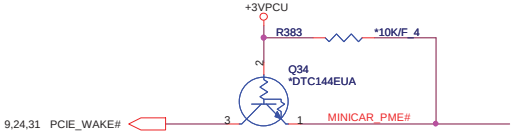

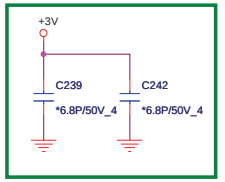

PV for RF solution

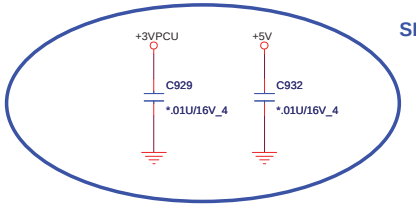

SP8 1.1 SI for RF reserve

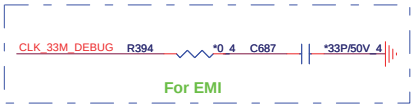

CPU FAN

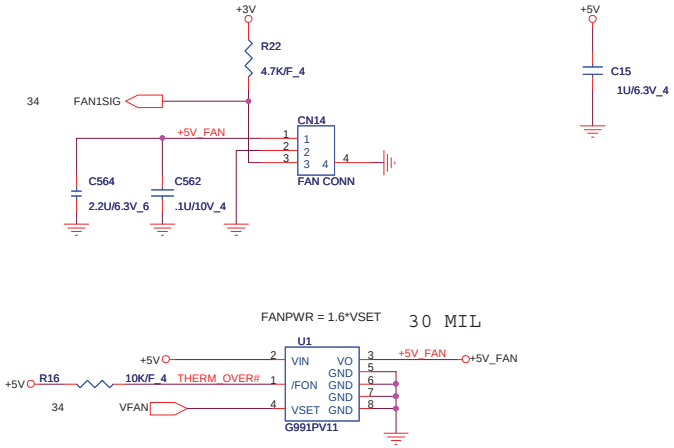

G995 layout notice

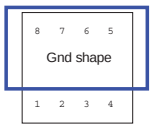

LED

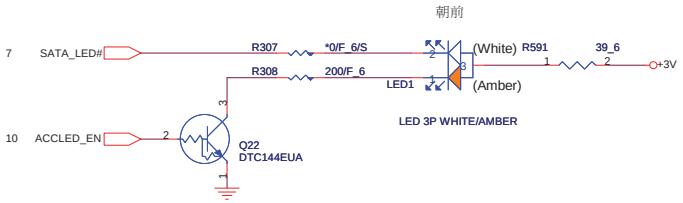

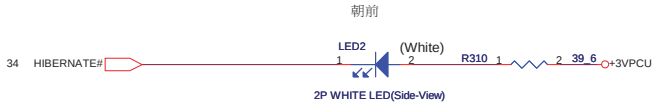

PROJECT : SP8
Quanta Computer Inc.

Size	Document Number	Rev
Custom	MINI PCIE CONN X2	3A

NB5/RD2

Date: Thursday, August 05, 2010 Sheet 35 of 47

http://laptop-motherboard-schematic.blogspot.com/

DC/DC +3V_ALW/+5V_ALW/+5V_ALW2 /+15V_ALW

+5V +/- 5%
Countinue current:6A
Peak current :8A
OCP minimum :10A

+3.3V +/- 5%
Countinue current:5A
Peak current:6A
OCP minimum 7.5A

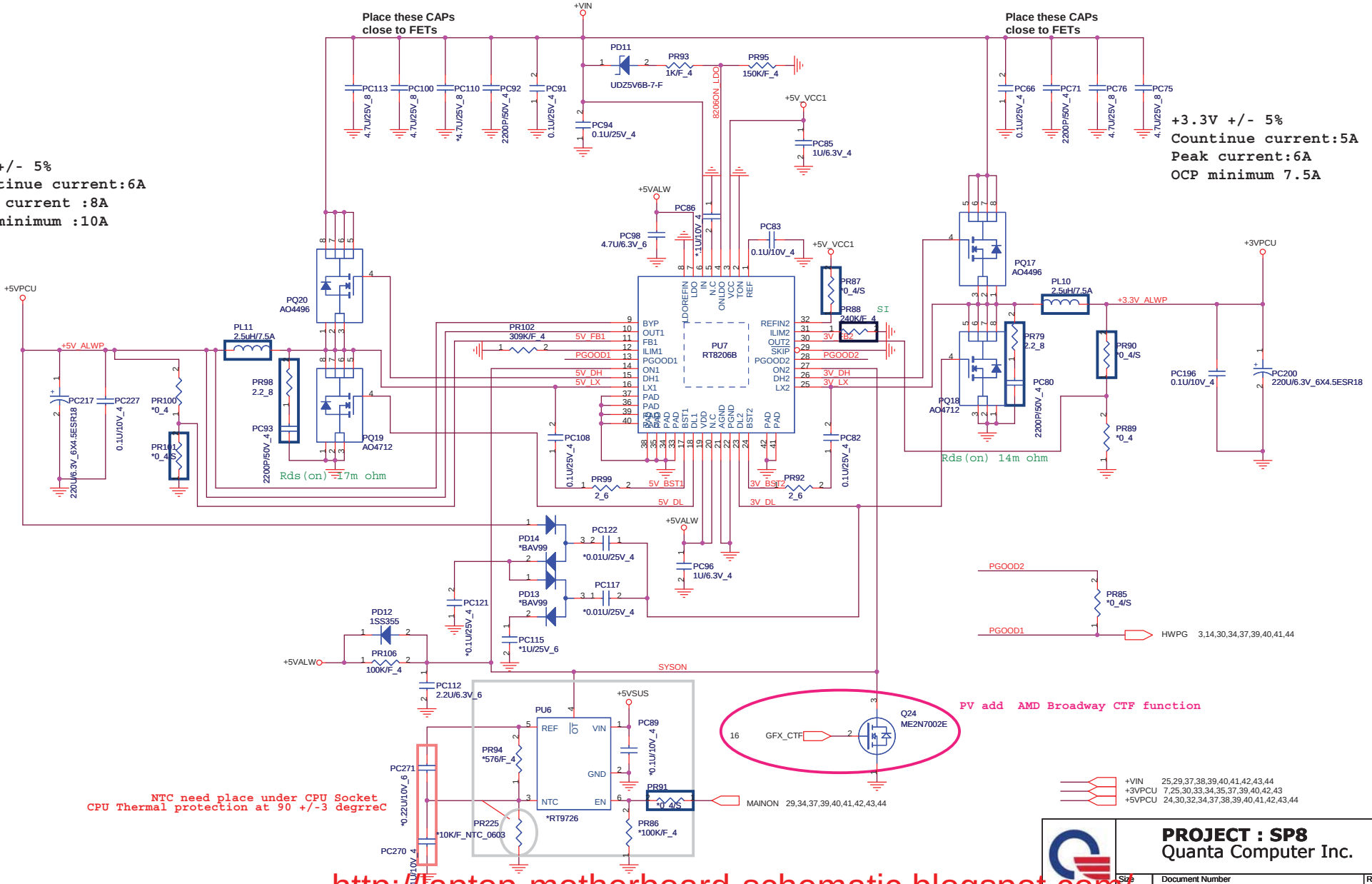

PROJECT : SP8
Quanta Computer Inc.

Size	Document Number	Rev
Custom	+5V/+3V (RT8206B)	3A
Date: Thursday, August 05, 2010	Sheet 36 of 47	

http://laptop-motherboard-schematic.blogspot.com/

+1.05V +/- 5%
Countinue current:4A
Peak current:7A
OCP minimum 9A

RT8204C
RDSon=20m ohm
600 mils
Vo=0.75(R1+R2)/R2

+1.8V Volt +/- 5%
Countinue current:1A
Peak current:2A
OCP minimum 3A

Vo=0.75(R1+R2)/R2

+1.05 Volt +/- 0.1V
Countinue current:0.7A
Peak current:2A

RT9025
VO=(0.8(R1+R2)/R2
R2<120Kohm

+1.05VSUS 24
+1.8V 5,10,11,42
+VIN 25,29,36,38,39,40,41,42,43,44
+1.05V 2,7,8,9,11,38
+3VPCU 7,25,30,33,34,35,36,39,40,42,43
+5VPCU 24,30,32,34,36,38,39,40,41,42,43,44

PROJECT : SP8
Quanta Computer Inc.

Size	Document Number	Rev
Custom	+1.05V/+1.8V (RT8204C)	3A

Date: Thursday, August 05, 2010 | Sheet 37 of 47

http://laptop-motherboard-schematic.blogspot.com/

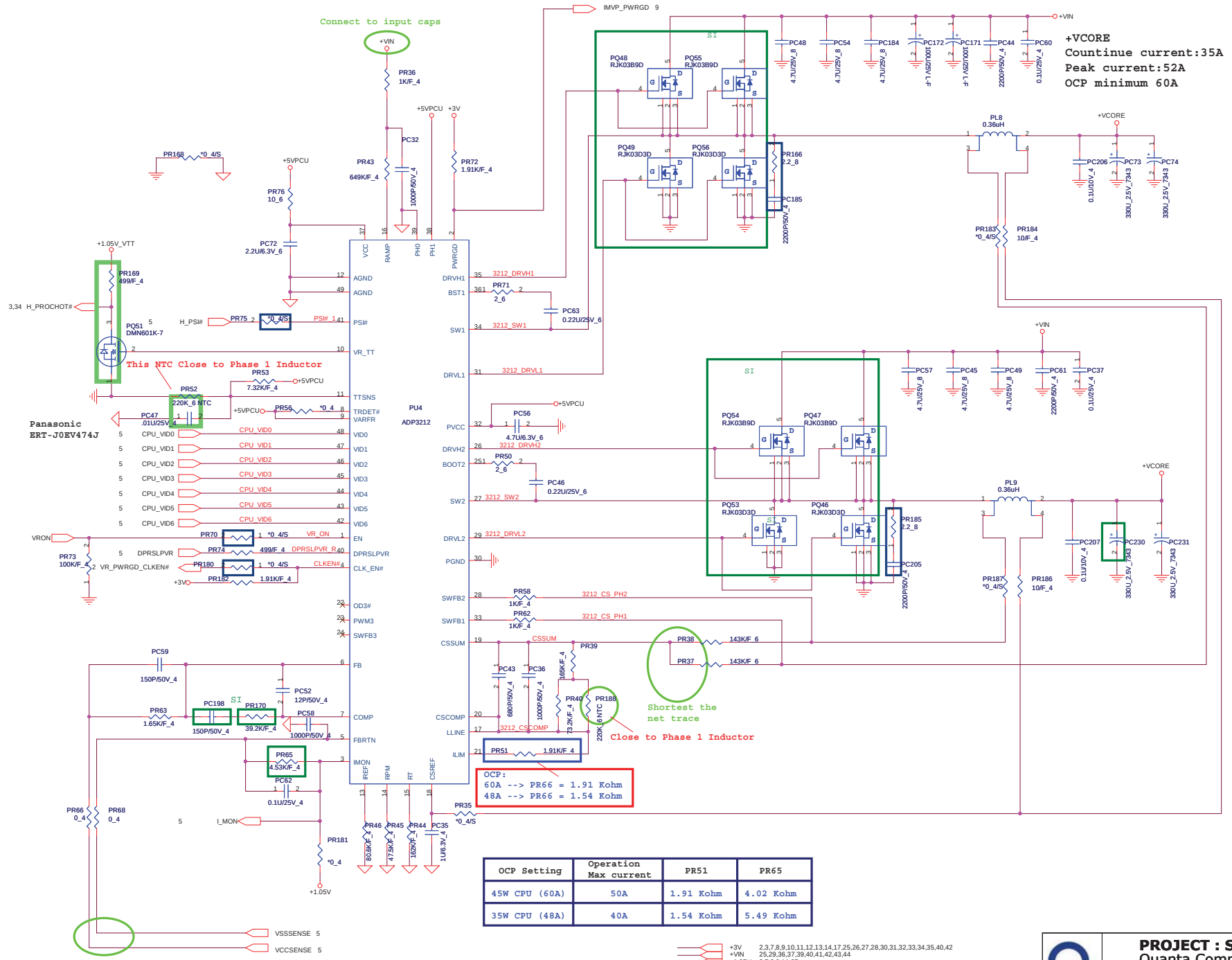

OCP Setting	Operation Max current	PR51	PR65
45W CPU (60A)	50A	1.91 Kohm	4.02 Kohm
35W CPU (48A)	40A	1.54 Kohm	5.49 Kohm

+3V 2,3,7,8,9,10,11,12,13,14,17,25,26,27,28,30,31,32,33,34,35,40,42
+VIN 25,29,36,37,39,40,41,42,43,44
+1.05V 2,7,8,9,11,37
+5VPCU 24,30,32,34,36,37,39,40,41,42,43,44
+VCORE 5
+1.05V_VTT 5,10,11,40

PROJECT : SP8
Quanta Computer Inc.

Size	Document Number	Rev
Custom	CPU Core (ADP3212)	3A
N85/MD2	Date: Thursday, August 05, 2010	Sheet 38 of 47

http://laptop-motherboard-schematic.blogspot.com/

H_VTTVID1=Low, 1.1V
H_VTTVID1=High, 1.05V

+VIN 25,29,36,37,38,40,41,42,43,44
+3VS5 8,9,10,11,42
+3VPCU 7,25,30,33,34,35,36,37,40,42,43
+5VPCU 24,30,32,34,36,37,38,40,41,42,43,44
+3V_VGA 15,16,17,18,19,26,33
+1.05V_VTT 3,5,10,11,34,38
+1.8V_VGA 14,16,18

+1.05V_VTT +/- 5%
Countinue current:12A
Peak current:15A
OCP minimum 18A

FOR SP8 1.1 SI

PU11 VT358

+1.8V +/- 5%
Countinue current:1.2A
Peak current:3A

PU8 RT9025

R1 R2

VO=(0.8(R1+R2)/R2)
R2<120Kohm

http://laptop-motherboard-schematic.blogspot.com/

PROJECT : SP8
Quanta Computer Inc.

Size	Document Number	Rev
Custom	+1.05V_VTT (VT358)	3A

Date: Thursday, August 05, 2010 | Sheet 39 of 47

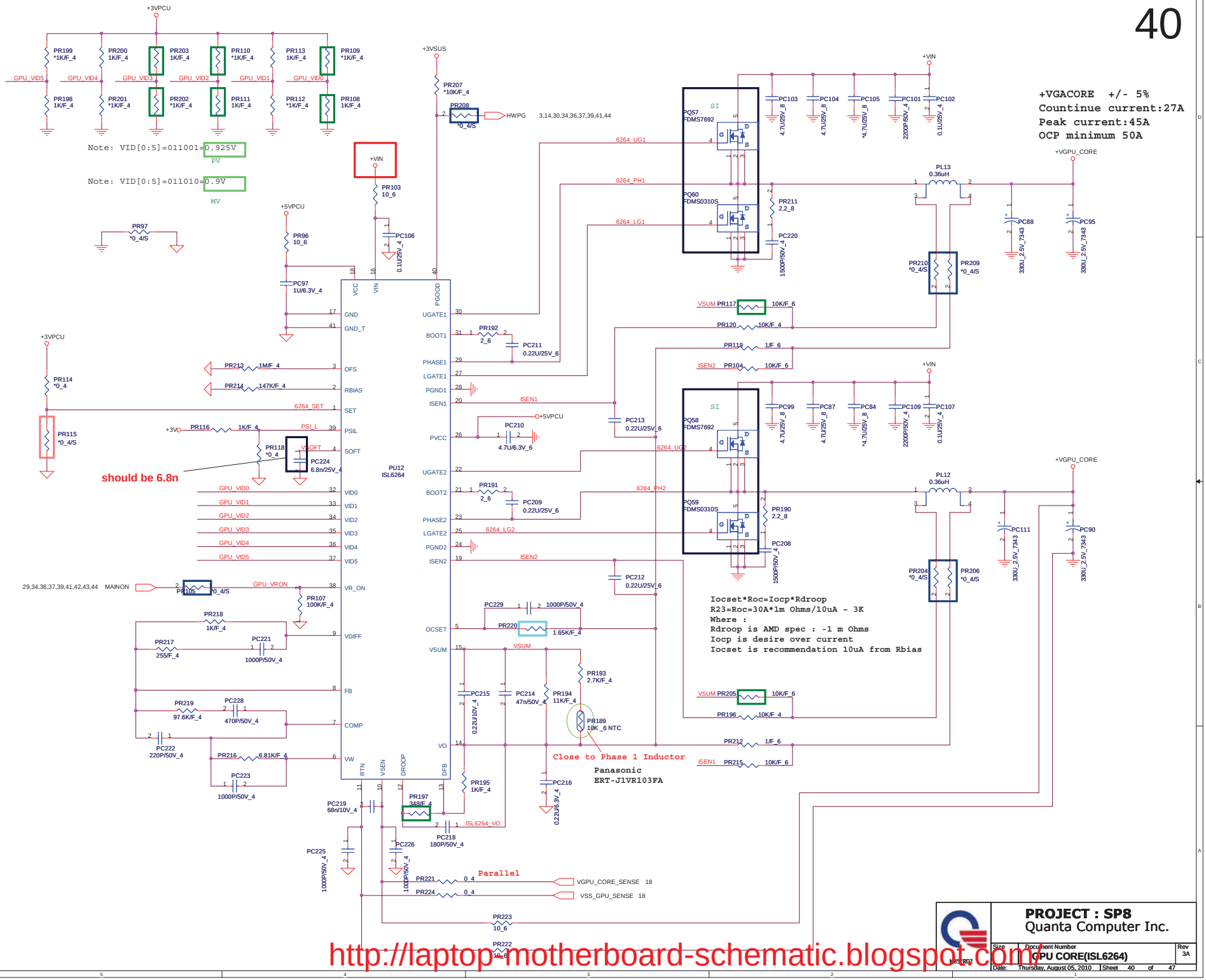

http://laptop-motherboard-schematic.blogspot.com/

+1.5V +/- 5%
Countinue current:6A
Peak current:12A
OCP minimum 15A

(VTT/2A)
+0.75V_DDR_VTT
(3mA)
12 DDR_VTTREF

PU5 RT8207AGQW
VTTGND VTTSNS GND MODE VTTREF COMP NC VDDQSNS VDDQSET S3 S5 NC
GND VTT VLDOIN VBST DRVH LL DRVL PGND CS_GND CS V5IN V5FILT PGOOD

PC70 10U/6.3V_8
PC69 10U/6.3V_8
PR78 *0_4/S
PC78 0.033U/10V_4
PC67 *10U/6.3V_8
PD9 *RB501V-40
PR69 2_6
PC64 0.1U/25V_4
PR84 *0_4
PR77 7.5K/F_4
PR81 619K/F_4
PR80 10_6
PC79 1U/6.3V_4
PC77 1U/6.3V_4

PQ52 RJK03B9D
PQ45 RJK03D3D
PC38 0.1U/25V_4
PC41 4.7U/25V_8
PC40 4.7U/25V_8
PC39 2200P/50V_4
PL7 CV-10L0MZ01/DC-10F0M102
PR167 *2.2_8
PC182 *2200P/50V_4

PC180 390U/2.5V_6X5.8ESR10
PC183 0.1U/10V_4
PR83 10K/F_4
PC81 *100P/50V_4
PR82 10K/F_4

+1.5VSUS
+5VPCU
+VIN
+1.5VSUS_1
1116VBST
1116DRVH
1116LL
1116DRVL
1116CS
V5FILT
1116VDDQSET
1116TONSET
HWPG
34,37,42 SUSON
29,34,36,37,39,40,42,43,44 MAINON
3,14,30,34,36,37,39,40,44

need to stuff for S3 and PR263 change to 100K

PD23 1SS355
PR263 100K/F_4
PC267 0.1U/10V_4

+1.0V +/- 5%
Countinue current:1.7A
Peak current:3A

PU10 RT9025
VIN NC VOUT EN VDD GND PGOOD ADJ GND1

PC158 10U/6.3V_8
PC153 0.1U/10V_4
PR153 2.2K/F_4
PC155 0.1U/10V_4
PC152 1U/6.3V_4
PR152 *0_4/S
PR150 25.5K/F_4
PR149 100K/F_4
R1
R2
1.2VADJ1.0V
VO=(0.8(R1+R2)/R2)
R2<120Kohm
PC149 10U/6.3V_8
PC150 10U/6.3V_8
PC148 0.1U/10V_4
+1.0V_VGA

http://laptop-motherboard-schematic.blogspot.com/

PROJECT : SP8
Quanta Computer Inc.
Size Custom | Document Number DDR3 (RT8207) | Rev 3A
Date: Thursday, August 05, 2010 | Sheet 41 of 47

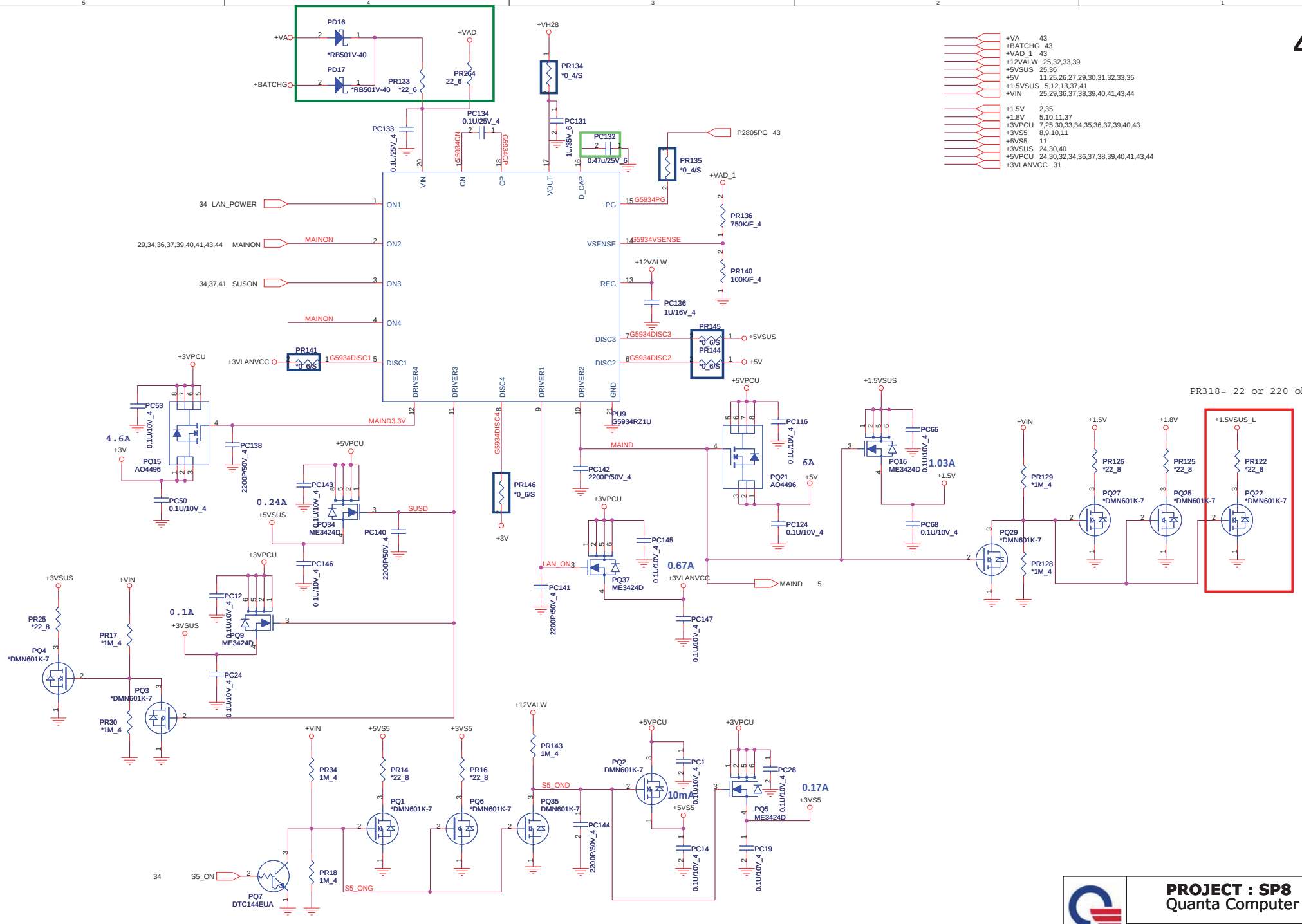

PROJECT : SP8
Quanta Computer Inc.

Size	Document Number	Rev
Custom	Dis-charge IC (P2806)	3A

NB5/RD2

Date: Thursday, August 05, 2010 Sheet 42 of 47

http://laptop-motherboard-schematic.blogspot.com/

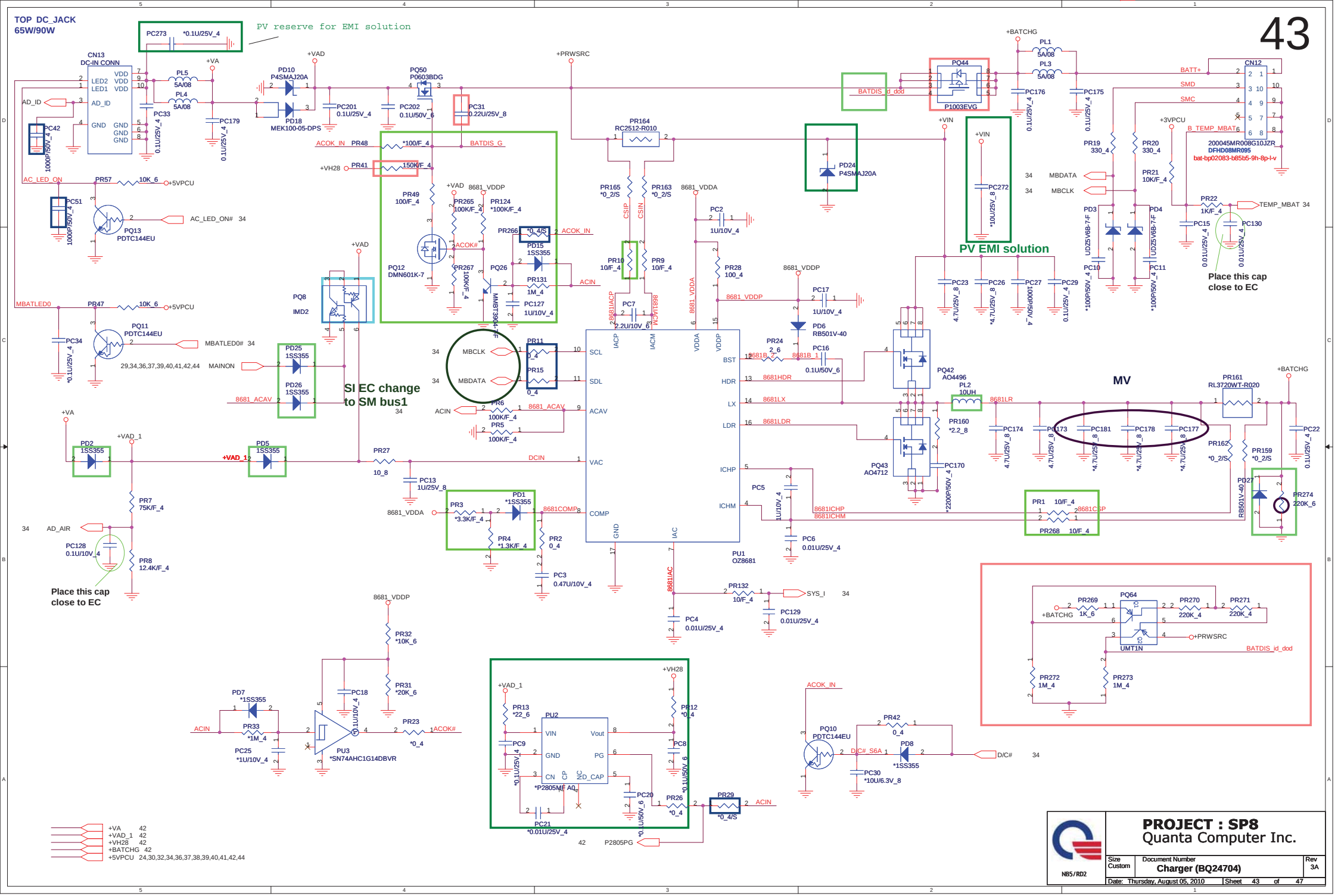

http://laptop-motherboard-schematic.blogspot.com/

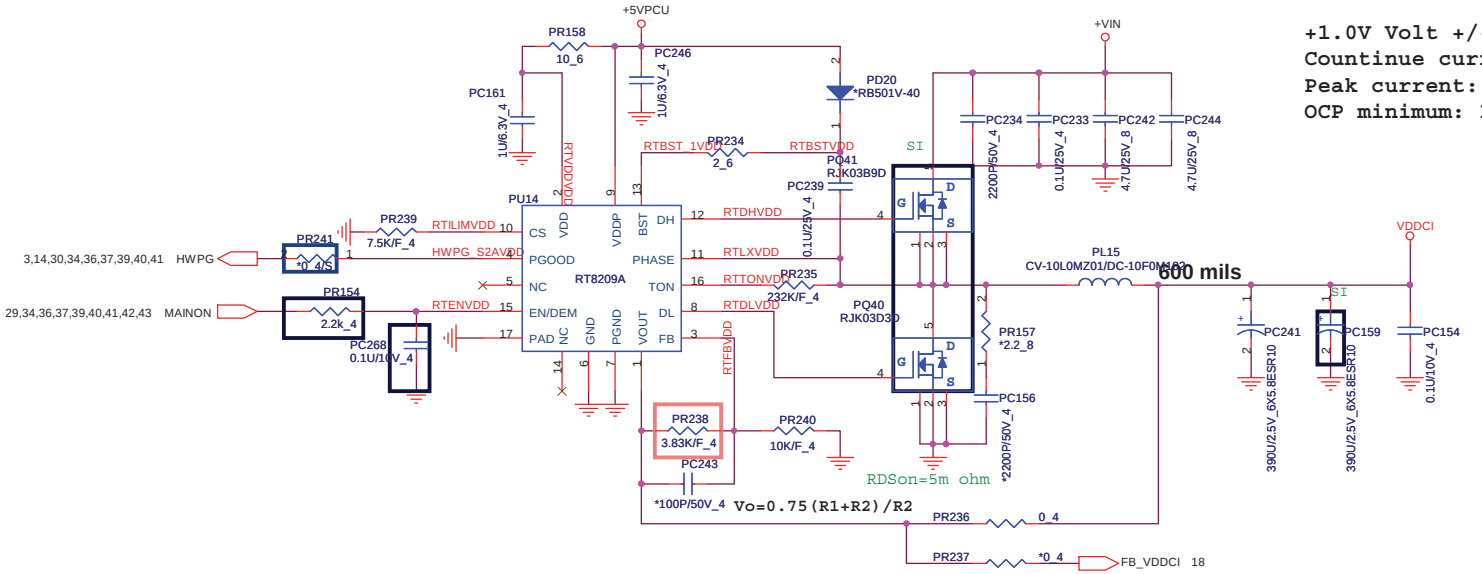

+1.0V Volt +/- 5%
Countinue current:9A
Peak current: 12A
OCP minimum: 15A

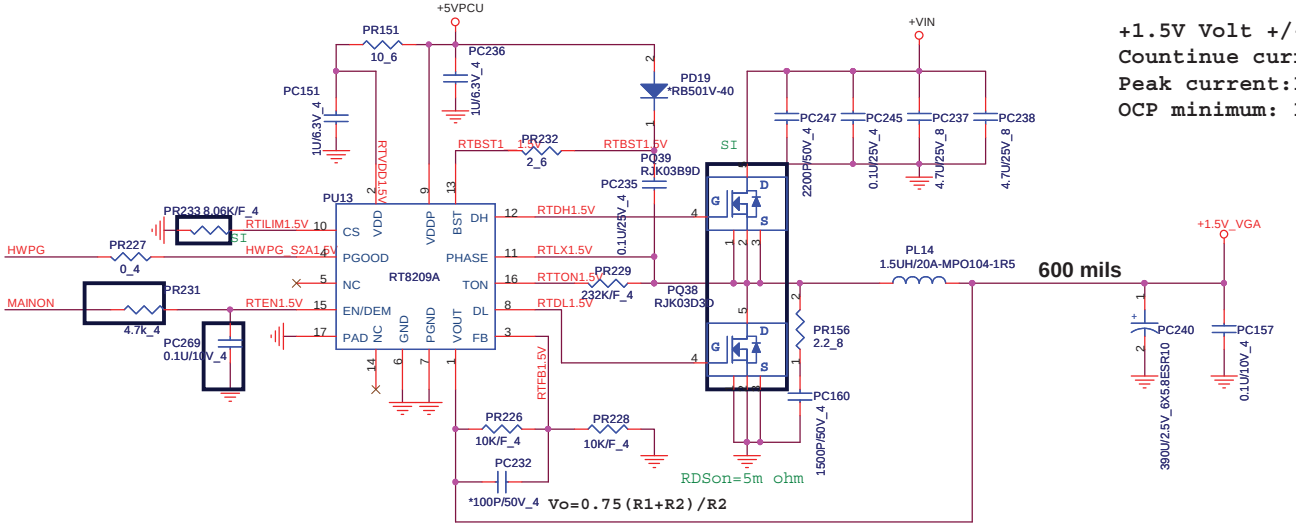

+1.5V Volt +/- 5%
Countinue current:9A
Peak current:12A
OCP minimum: 15A

http://laptop-motherboard-schematic.blogspot.com/

NB5/RD2	PROJECT : SP8 Quanta Computer Inc.	
Size: Custom	Document Number: VGA Core/+1.8VGFX/1.0VGFX	Rev: 3A
Date: Thursday, August 05, 2010	Sheet 44 of 47	