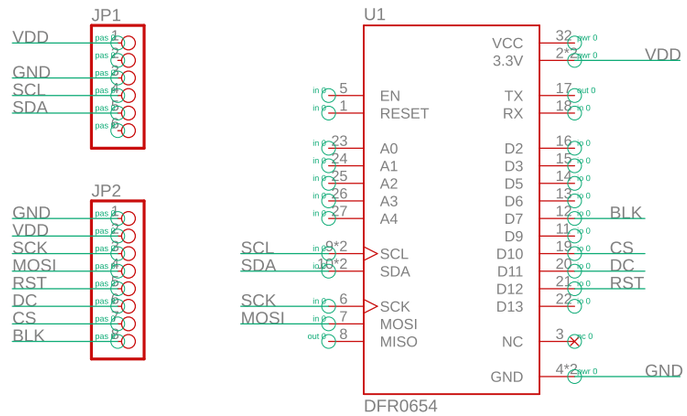

orient-beetle

7/15/2022 3:24 PM

Sheet: 1/1