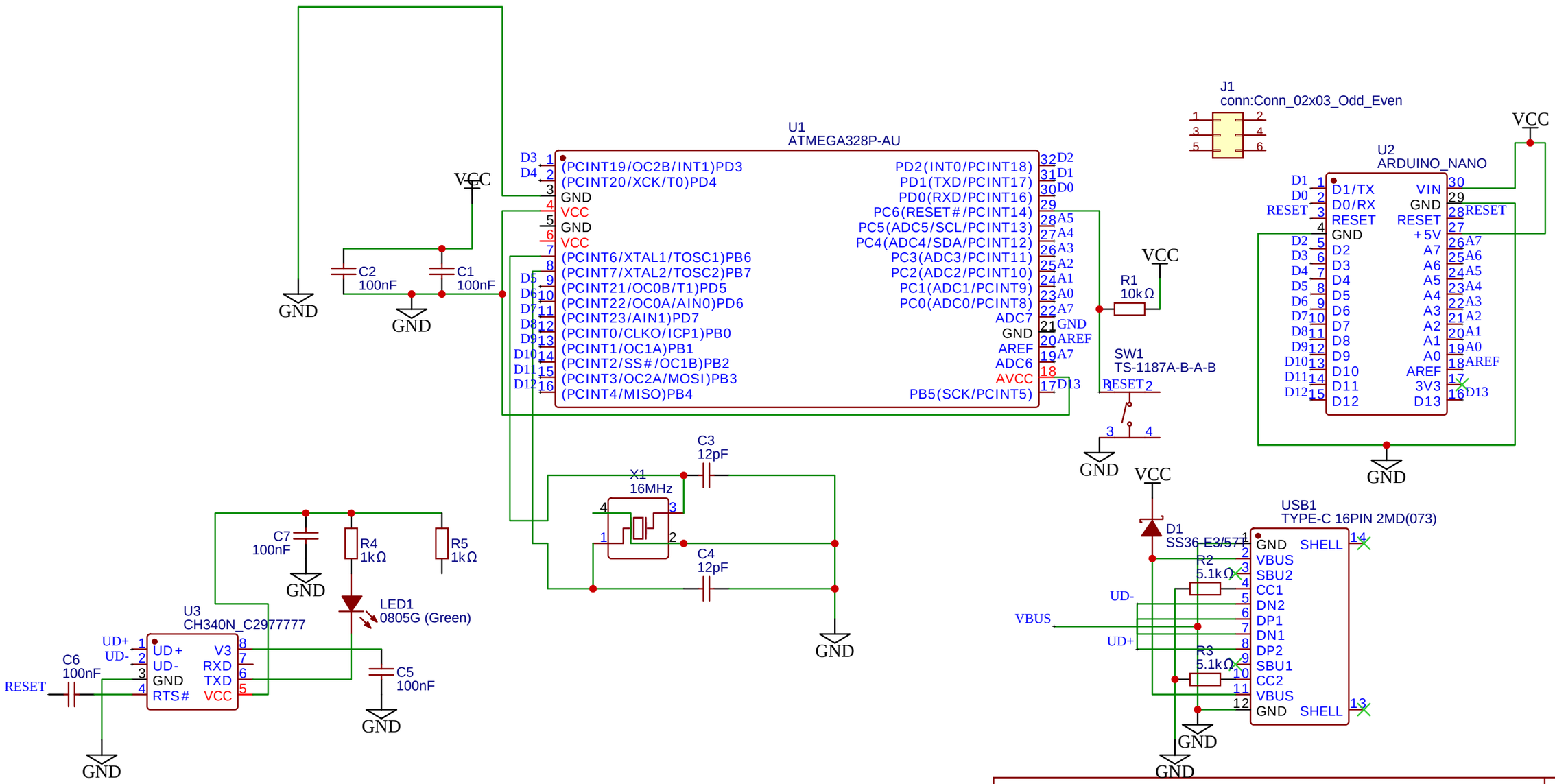

TITLE: Daniel's Arduino	REV: 1.0
Company: Hack Club	Sheet: 1/1
Date: 2024-08-21 Drawn By: Daniel	