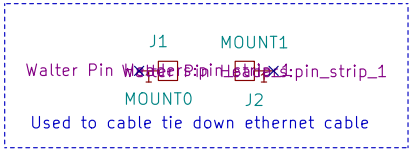

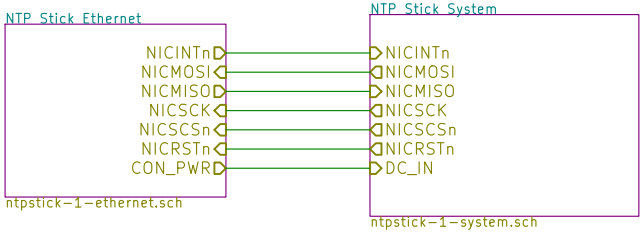

Not Production Proven

CC BY-SA

hairy.geek.nz

Sheet: /

File: ntpstick-1.sch

Title: NTP Stick 1.1

Size: A4	Date: Mon 10 Nov 2014	**Rev: 1**
KiCad E.D.A. kicad 0.201411071246+525619ubuntu14.04.1-product		Id: 1/3

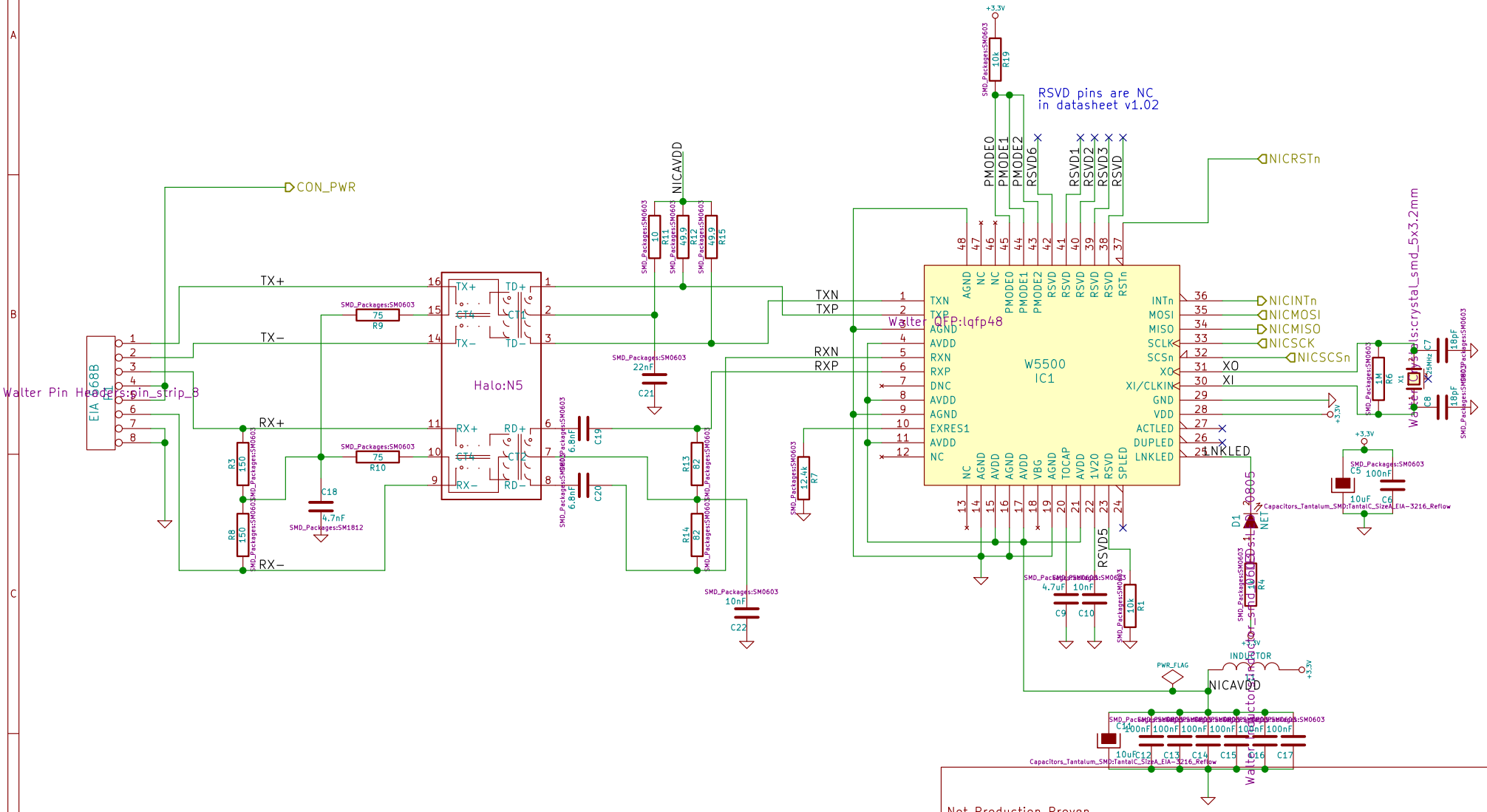
CON_PWR
Walter Pin Heads:pin_strip_8
EIA-568B
TX+
TX−
RX+
RX−
Halo:N5
TXN
TXP
RXN
RXP
NICAVDD
W5500
IC1
Walter QFP:lqfp48
RSVD pins are NC
in datasheet v1.02
PMODE0
PMODE1
PMODE2
RSVD6
RSVD1
RSVD2
RSVD3
RSVD
RSVD5
NICRSTn
NICINTn
NICMOSI
NICMISO
NICSCK
NICSCSn
XO
XI
LNKLED
INDUCTOR
PWR_FLAG
Walter Crystal:crystal_smd_5x3.2mm
Walter Inductor:inductor_smd_1005
Not Production Proven
CC BY-SA
hairy.geek.nz
Sheet: /NTP Stick Ethernet/
File: ntpstick-1-ethernet.sch
Title: NTP Stick 1.1
Size: A4
Date: Mon 10 Nov 2014
Rev: 1
KiCad E.D.A. kicad 0.201411071246+525619ubuntu14.04.1-product
Id: 2/3

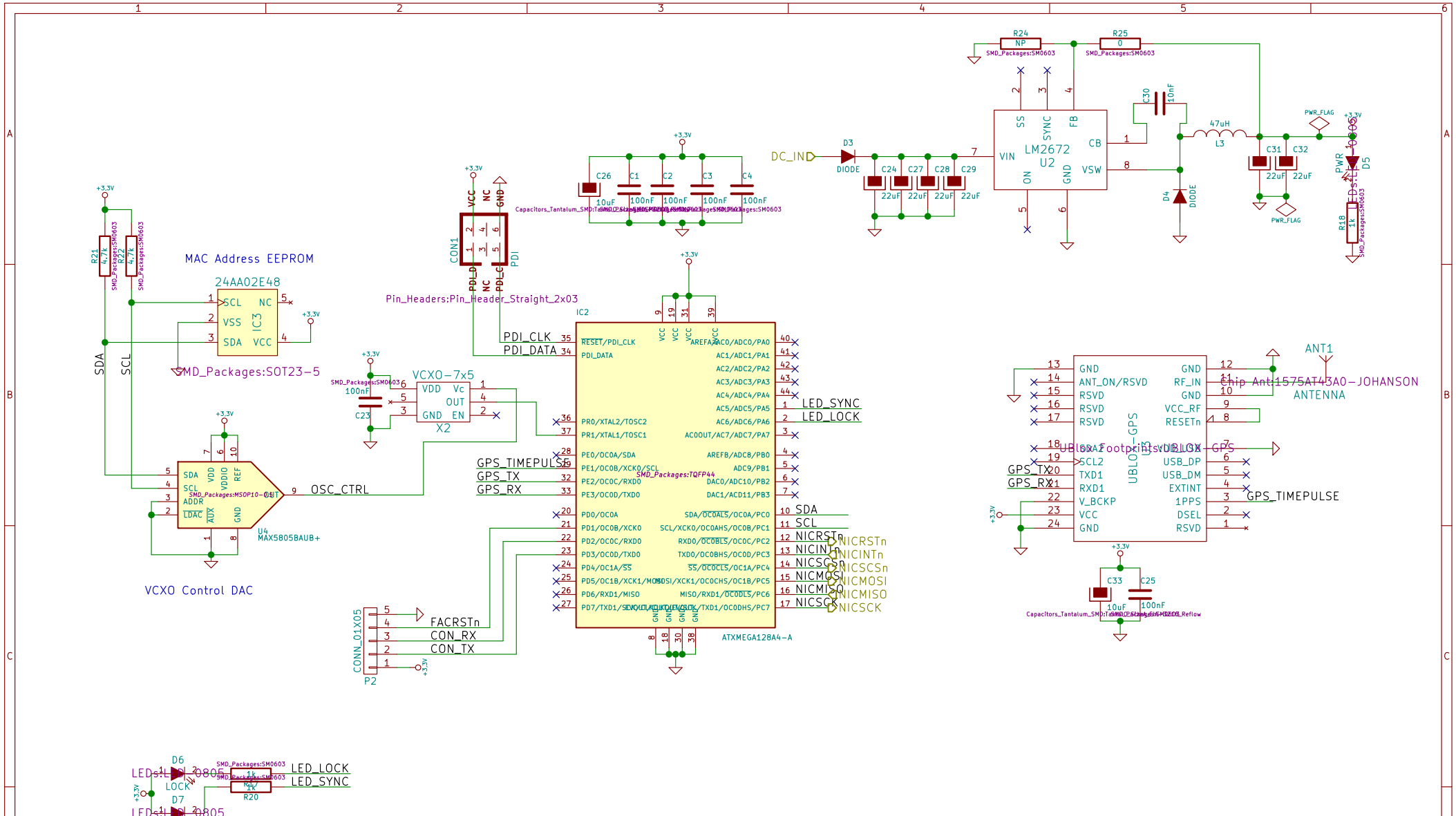

Not Production Proven
CC BY-SA
hairy.geek.nz

Sheet: /NTP Stick System/
File: ntpstick-1-system.sch

Title: NTP Stick 1.1

Size: A4	Date: Mon 10 Nov 2014	**Rev: 1**
KiCad E.D.A. kicad 0.201411071246+525619ubuntu14.04.1-product		Id: 3/3