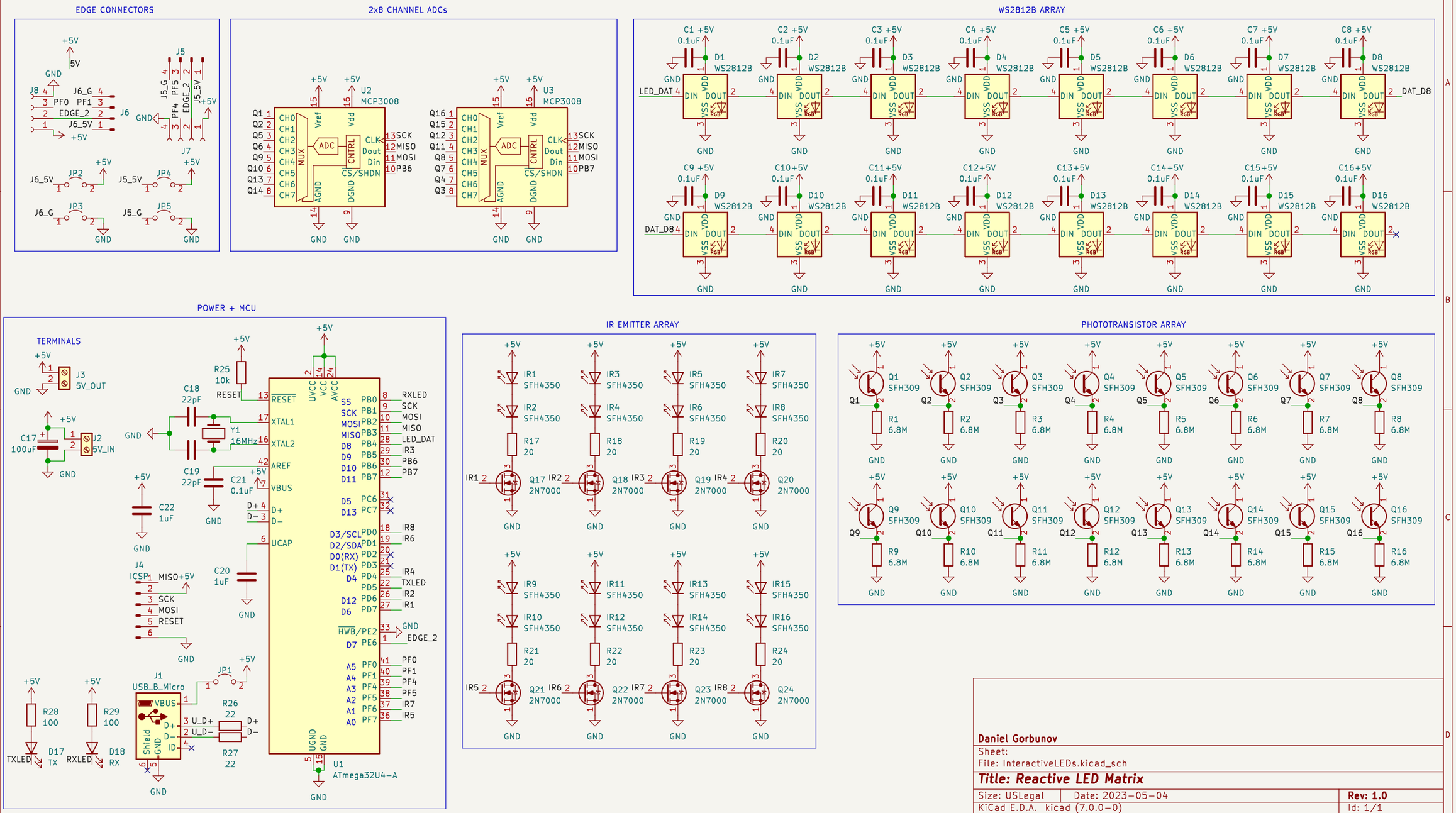
EDGE CONNECTORS
2x8 CHANNEL ADCs
WS2812B ARRAY
POWER + MCU
TERMINALS
IR EMITTER ARRAY
PHOTOTRANSISTOR ARRAY
U1
ATmega32U4-A
U2
MCP3008
U3
MCP3008
J1
USB_B_Micro
J4
ICSP
J6
J7
J8
J3
5V_OUT
J2
5V_IN
Y1
16MHz
JP1
JP2
JP3
JP4
JP5
LED_DAT
DAT_D8
Daniel Gorbunov
Sheet:
File: InteractiveLEDs.kicad_sch
Title: Reactive LED Matrix
Size: USLegal
Date: 2023-05-04
Rev: 1.0
KiCad E.D.A. kicad (7.0.0-0)
Id: 1/1