Introduction to
Electrical Engineering 1

Textbook:

Electric Circuits

James W. Nilsson & Susan A. Riedel

9th Edition.

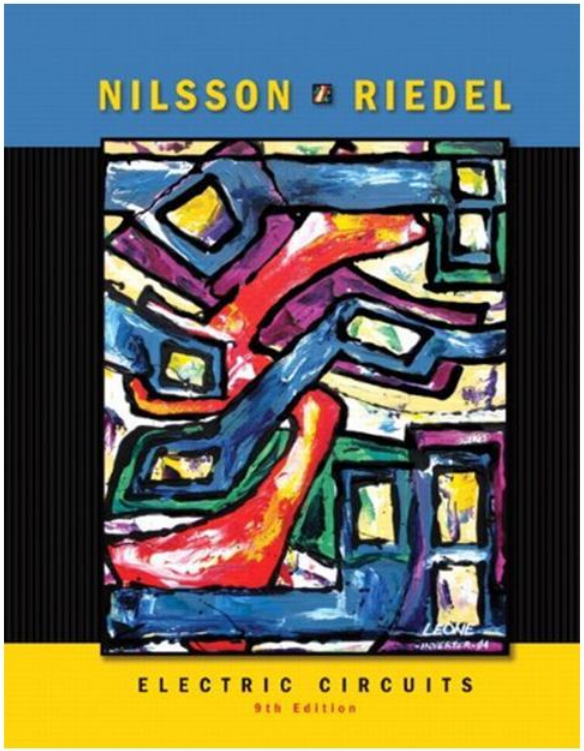

Survival Skills

- To attend every lecture (even though you think you already know some of the stuff). Supplements might be provided during class.
- "Understanding" is the key.
- It's not just about getting a 'pass', Try to have fun while learning and practicing.
- Take pride in yourself. Never cheat (you don't need that).

A Story

http://www.gentraco.com.vn/vn/tin-tuc/gia-gao-xuat-khau-tang-nhe.html

VN is a agricultural country
Export: ~$410/ton

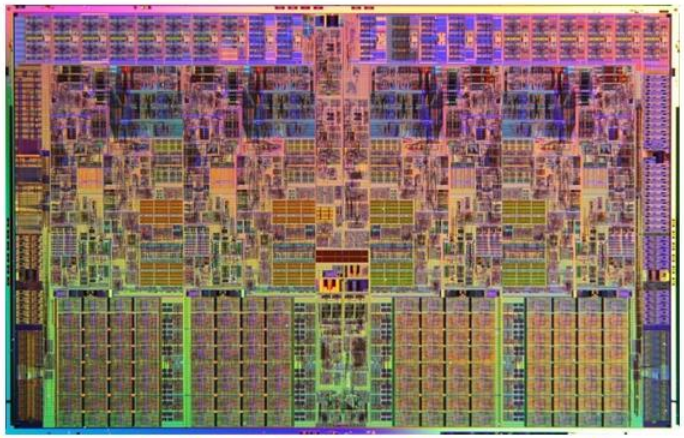

Almost 1,000,000,000 transistors
Features as small as a nanometer
@ amazon.com: $322 - 408

Moore’s Law

Moore's law is the observation that the number of transistors in an integrated circuit (IC) doubles about every two years

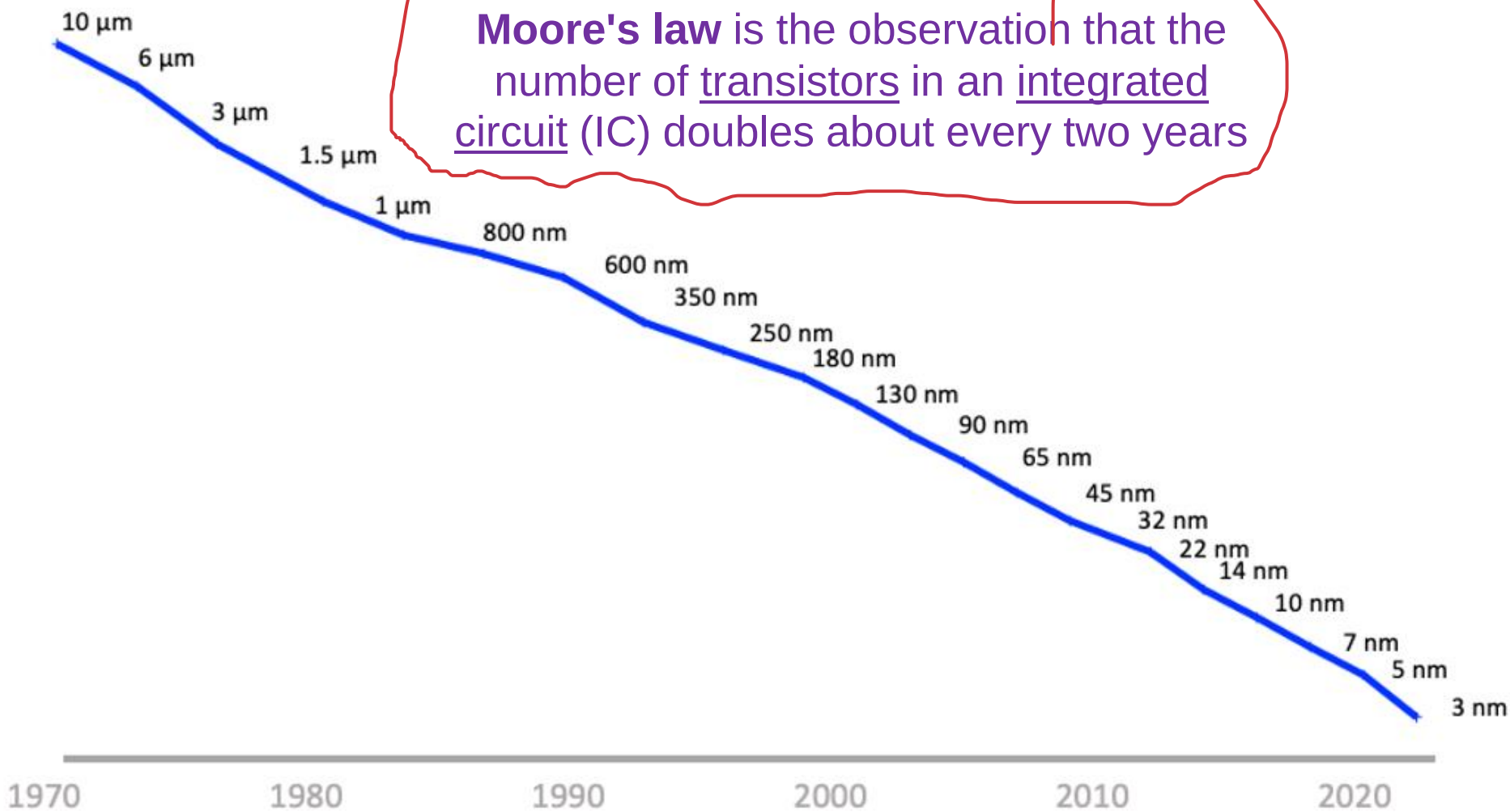

ELECTRONIC CIRCUITS

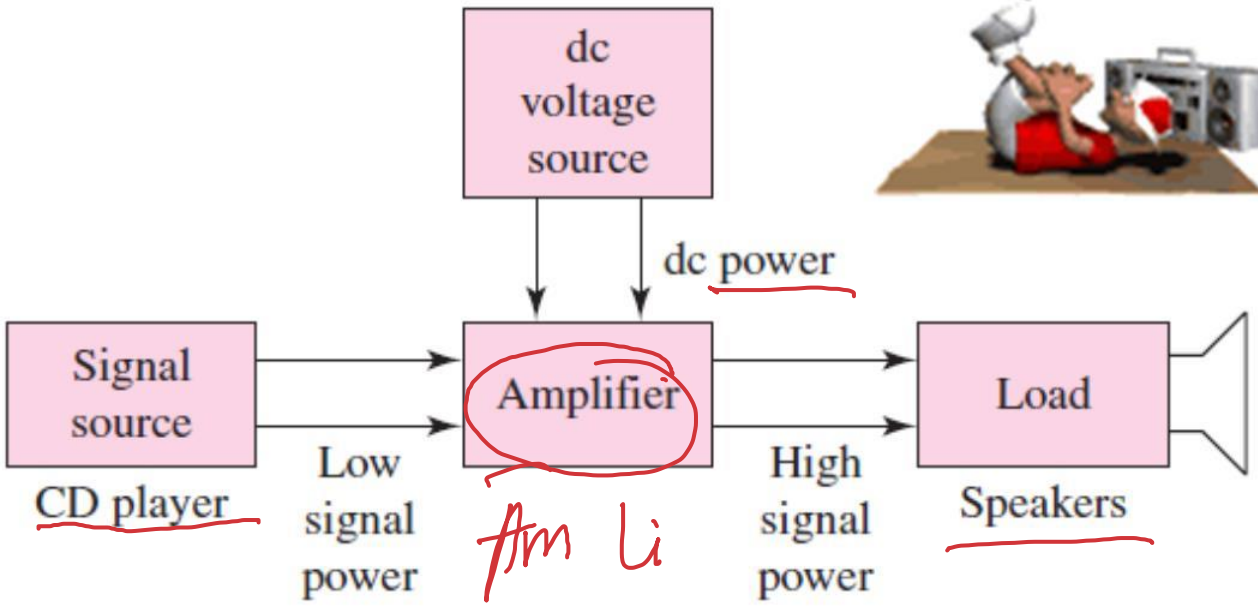

The analysis of electronic circuits is divided into two parts: one deals with the dc input and its circuit response (amplification, filter,..), and the other deals with the signal input and the resulting circuit response.

Devices in Electronic Circuits

Does not change

- **Passive components** – cannot provide power gain
  – e.g., resistor, capacitor, inductor 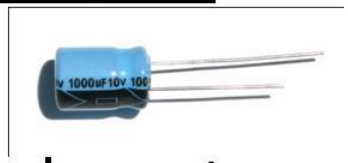
- **Active devices** – can provide power gain and must draw power from a supply may need batery
  – e.g., Vacuum tube devices, silicon transistors
  – Enable signal amplification which is a key technology for the success of long distance telephony

Tube

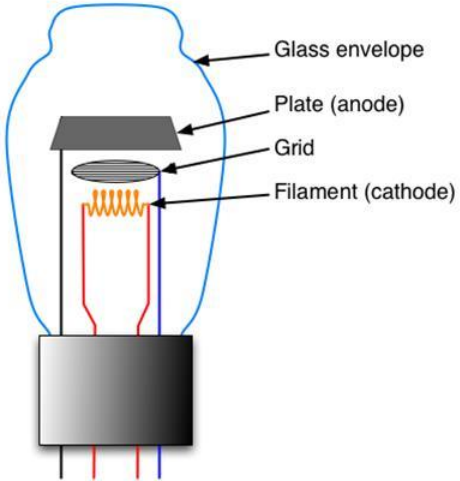

transitor

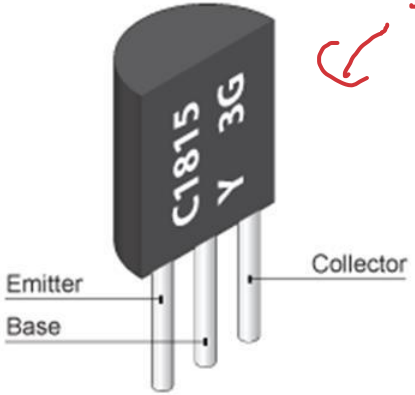

Circuit theories and skills that you MUST learn

- KCL and KVL
- Nodal and Mesh analysis
- Linearity and Superposition
- Source transformation
- Thevenin and Norton theorems
- Maximum power transfer
- AC analysis
- …

You should already be able to analyze circuits that consist of R, C and L, i.e., passive circuits.

CHAPTER 1 – Circuit Variables

What is an Electric Circuit?

" A mathematical model that approximates the behavior of an actual circuit system."

EM

Circuit theory is a special case of electromagnetic field theory.

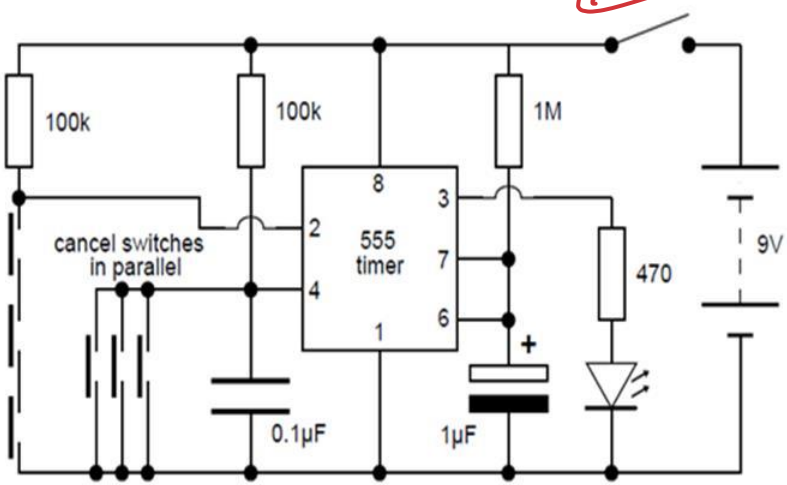

mathematical model

to compute
to design

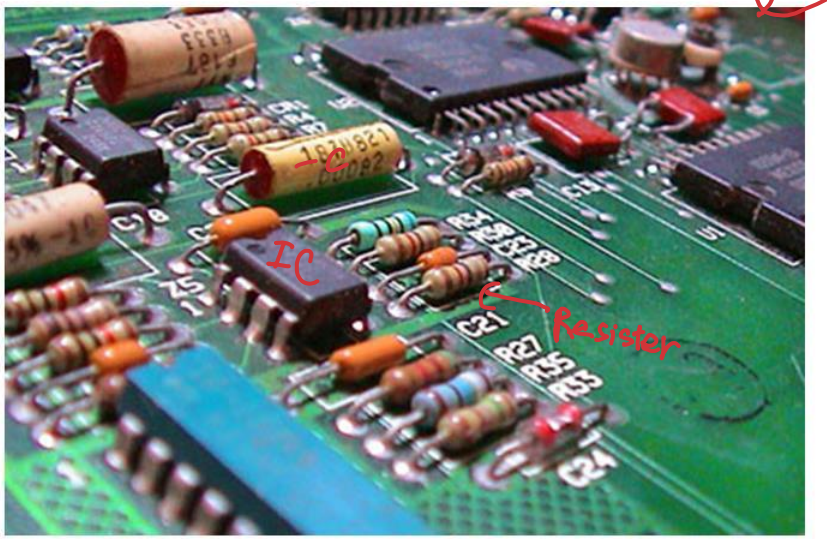

actual circuit system

International System of Units (SI)

Unique

SI unit can be divided into two classes: base units and derived units

Base units basic

Quantity	Name	Symbol
Length	Meter	m
Mass	Kilogram	kg
Time	Second	s
Electric Current	Ampere	A
Temperature	Degree Kelvin	K
Amount of Substance	Mole	mol
Luminous intensity	Candela	Cd

Derived units

Quantity	Symbol	Formula
Frequency	Hertz (Hz)	s^{-1}
Force	Newton (N)	$kg.m/s^2$
Energy or Work	Joule (J)	N.m
Power	Watt (W)	J/s
Electric Charge	Coulomb (C)	A.s
Electric Potential	Volt (V)	J/C
Electric Resistance	Ohm (Ω)	V/A
Electric Conductance	Siemens (S)	A/V
Electric Capacitance	Farad (F)	C/V
Magnetic Flux	Weber (Wb)	V.s
Inductance	Henry (H)	Wb/A

Standardized prefixes to signify powers of 10

Multiple Prefixes

Prefix	Symbol	Magnitude
yotta	Y	10^{24}
zetta	Z	10^{21}
exa	E	10^{18}
peta	P	10^{15}
tera	T	10^{12}
giga	G	10^{9}
mega	M	10^{6}
Kilo	k	10^{3}
hecto	h	10^{2}
deca	da	10^{1}

Sub-multiple Prefixes

Prefix	Symbol	Magnitude
deci	d	10^{-1}
centi	c	10^{-2}
milli	m	10^{-3}
micro	μ	10^{-6}
nano	n	10^{-9}
pico	p	10^{-12}
femto	f	10^{-15}
atto	a	10^{-18}
zepto	z	10^{-21}
yocto	y	10^{-24}

Voltage (Electric) "V"

The concept of electric charge is the basis for describing all electrical phenomena.

- The charge is bipolar: positive and negative charges.
- The electric charge exists in discrete quantities, which are integral multiples of the electronic charge, 1.6022×10^{-19} C.

In circuit theory, the separation of charge creates an electric force (voltage), and the motion of charge creates an electric fluid (current).

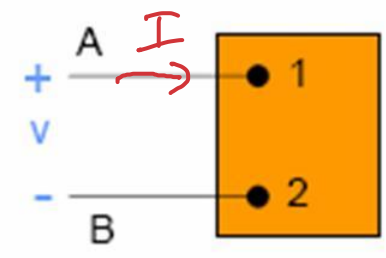

The voltage (electric) is the energy per unit charge.

$$v = \frac{dw}{dq} \quad \text{J/C or (V)}$$

Electric Current "I"

The electrical effects caused by charges in motion depend on the rate of charge flow. The rate of charge flow is known as the **electric current**, which is expressed as

$$\boxed{i = \frac{dq}{dt}} \quad \text{C/s or (A)}$$

Thus in a current of 1 ampere, charge is being transferred at a rate of 1 coulomb per second

The ideal basic circuit element

- Attributes of the ideal basic circuit element:

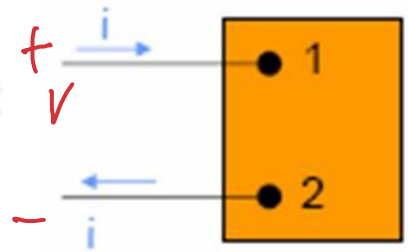

  - It has only two terminal
  - It is described mathematically in terms of current and/or voltage
  - It cannot be subdivided into other elements.

- Note:

R, C, I

  - It is called ideal because it does not exist as a realizable physical component.

Ideal component

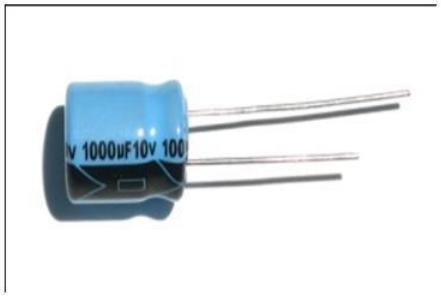

realizable physical component.

Interpretation of Reference Directions

Positive Value

v voltage drop from terminal 1 to terminal 2

or

voltage rise from terminal 2 to terminal 1

i positive charge flowing from terminal 1 to terminal 2

or

negative charge flowing from terminal 2 to terminal 1

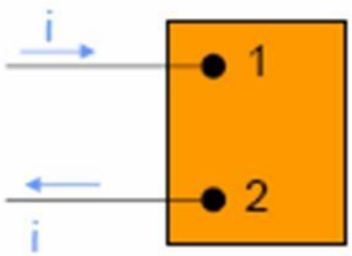

Negative Value

voltage rise from terminal 1 to terminal 2

or

voltage drop from terminal 2 to terminal 1

positive charge flowing from terminal 2 to terminal 1

or

negative charge flowing from terminal 1 to terminal 2

Example 1.1

No charge exists at the upper terminal of the element in Fig. for *t < 0. At t = 0, a 5 A current* begins to flow into the upper terminal.

$q = ?$ $\quad i = \frac{dq}{dt}$ $\quad q = \int i\,dt$

a) Derive the expression for the charge accumulating at the upper terminal of the element for *t > 0.*

b) If the current is stopped after 10 seconds, how much charge has accumulated at the upper terminal?

$t = 10$

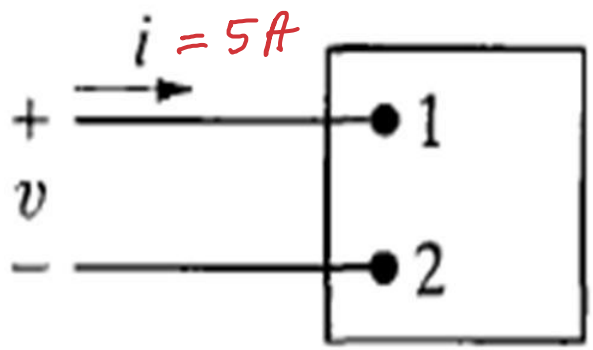

Solution

a) From the definition of current, the expression for charge accumulation due to current flow is

$$q(t) = \int_0^t i(x)dx.$$

Therefore,

$$q(t) = \int_0^t 5dx = 5x\Big|_0^t = 5t - 5(0) = 5t \text{ C} \quad \text{for } t > 0.$$

b) The total charge that accumulates at the upper terminal in 10 seconds due to a 5 A current is q(10) = 5(10) = 50 C.

Example 1.2

The current at the terminals of the element in Fig is:

$i = 0, \qquad t < 0;$

$i = 20e^{-5000t}\ A, \qquad t \geq 0.$

Calculate the total charge (in microcoulombs) entering the element at its upper terminal.

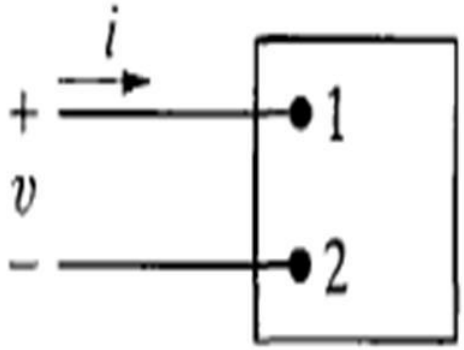

Solution

Current is the time rate of change of charge, or i = dq/dt. In this problem, we are given the current and asked to find the total charge. To do this, we must integrate the equation to find an expression for charge in terms of currents:

$$q(t) = \int_0^t i(x)\,dx$$

We are given the expression for current, i, which can be substituted into the above expression. To find the total charge, we let t → ∞ in the integral. Thus we have:

$$q_{\text{total}} = \int_0^\infty 20e^{-5000x}\,dx = \frac{20}{-5000}e^{-5000x}\Big|_0^\infty = \frac{20}{-5000}(e^{-\infty} - e^0)$$

$$= \frac{20}{-5000}(0-1) = \frac{20}{5000} = 0.004\ \text{C} = 4000\,\mu\text{C}$$

Example 1.3

The expression for the charge entering the upper terminal of Fig is

$$q = \frac{1}{\alpha^2} - \left(\frac{t}{\alpha} + \frac{1}{\alpha^2}\right)e^{-\alpha t} \text{ C.}$$

Find the maximum value of the current entering the terminal if $\alpha = 0.03679\ s^{-1}$.

$I = ?$

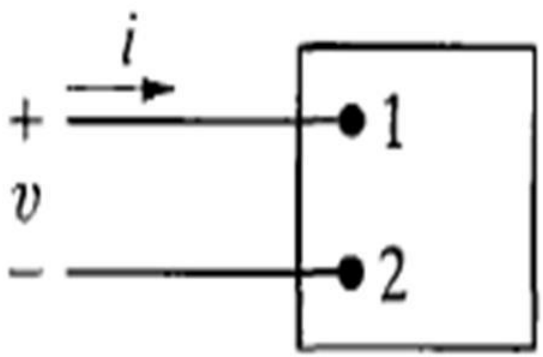

Solution

Again, current is the time rate of change of charge, or i = dq/dt. In this problem we are given an expression for the charge, and asked to find the maximum current. First, we will find an expression for the current using the equation:

$$i = \frac{dq}{dt} = \frac{d}{dt}\left[\frac{1}{\alpha^2} - \left(\frac{t}{\alpha} + \frac{1}{\alpha^2}\right)e^{-\alpha t}\right] = \frac{d}{dt}\left(\frac{1}{\alpha^2}\right) - \frac{d}{dt}\left(\frac{t}{\alpha}e^{-\alpha t}\right) - \frac{d}{dt}\left(\frac{1}{\alpha^2}e^{-\alpha t}\right)$$

$$= \frac{d}{dt}\left(\frac{1}{\alpha^2}\right) - \frac{d}{dt}\left(\frac{t}{\alpha}e^{-\alpha t}\right) - \frac{d}{dt}\left(\frac{1}{\alpha^2}e^{-\alpha t}\right) = \left(-\frac{1}{\alpha} + t + \frac{1}{\alpha}\right)e^{-\alpha t}$$

$$= te^{-\alpha t}$$

Now that we have an expression for the current, we can find the maximum value of the current by setting the first derivative of the current to zero and solving for t:

$$\frac{di}{dt} = \frac{d}{dt}(te^{-\alpha t}) = e^{-\alpha t} + t(-\alpha)e^{\alpha t} = (1 - \alpha t)e^{-\alpha t} = 0$$

Since $e^{-\alpha t}$ never equals 0 for a finite value of t, the expression equals 0 only when $(1 - \alpha t) = 0$. Thus, $t = 1/\alpha$ will cause the current to be maximum. For this value of t, the current is:

$$i = \frac{1}{\alpha}e^{-\alpha/\alpha} = \frac{1}{\alpha}e^{-1} = \frac{1}{0.03679}e^{-1} \cong 10 \text{ A}$$

Active and Passive Elements

- **Active element** is one that models a device that is capable of generating electric energy

  Example: Sources

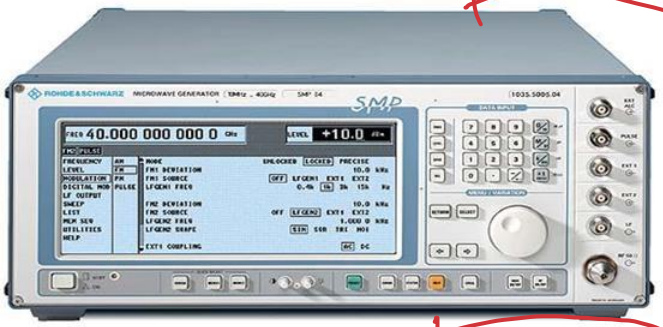

- **Passive element** is one that models a device that cannot generate electric energy

  Example: Resistors, inductors and capacitors

Power and Energy

nguồn là âm

Power and energy calculations also are important in circuit analysis.

< 0 > 0

Power is the time rate of expanding or absorbing energy

vật là dương +

$$p = \frac{dw}{dt} = \left(\frac{dw}{dq}\right)\cdot\left(\frac{dq}{dt}\right) = vi$$

Eq. is correct if the reference direction for the current is in the direction of the reference voltage drop across the terminals.

If the current reference is in the direction of a reference voltage rise across the terminals, the expression for the power is **p = +vi**

- If the power is positive (that is, if p > 0), power is being delivered to the circuit inside the box.
- If the power is negative (that is, if p < 0), power is being extracted from the circuit inside the box.

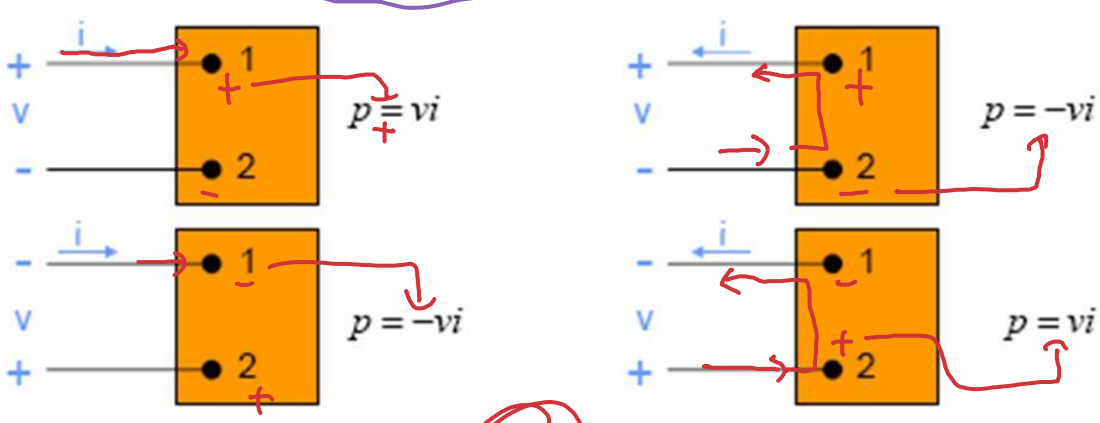

Fig. summarizes the relationship between the polarity references for voltage and current and the expression for power.

dòng sang âm → +

For example, suppose that we have selected the polarity references shown in Fig. (b). Assume further that our calculations for the current and voltage yield the following numerical results:

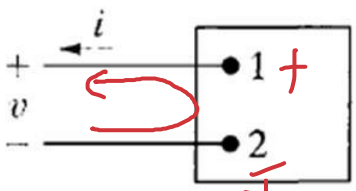

(b) $p = -vi$

$i = 4$ A and $v = -10$ V.

Then the power associated with the terminal pair 1,2 is

$$p = -(-10)(4) = 40 \text{ W}.$$

Thus the circuit inside the box is absorbing 40 W.

>0 Absorb

Ko phải ngược

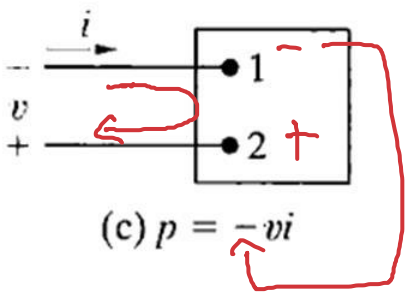

(c) $p = -vi$

If we choose the reference polarities shown in Fig. (c). The resulting numerical values are

i = -4 A, v = 10 V, and $p = 40$ W.

>0 Absorb

Note that interpreting these results in terms of this reference system gives the same conclusions that we previously obtained—namely, that the circuit inside the box is absorbing 40 W.

Example 1.4

When a car has a dead battery, it can often be started by connecting the battery from another car across its terminals. The positive terminals are connected together as are the negative terminals. The connection is illustrated in the Figure. Assume the current *i* in the Figure is measured and found to be 30 A.

a) Which car has the dead battery?

b) If this connection is maintained for 1 min, how much energy is transferred to the dead battery?

$t = 60$

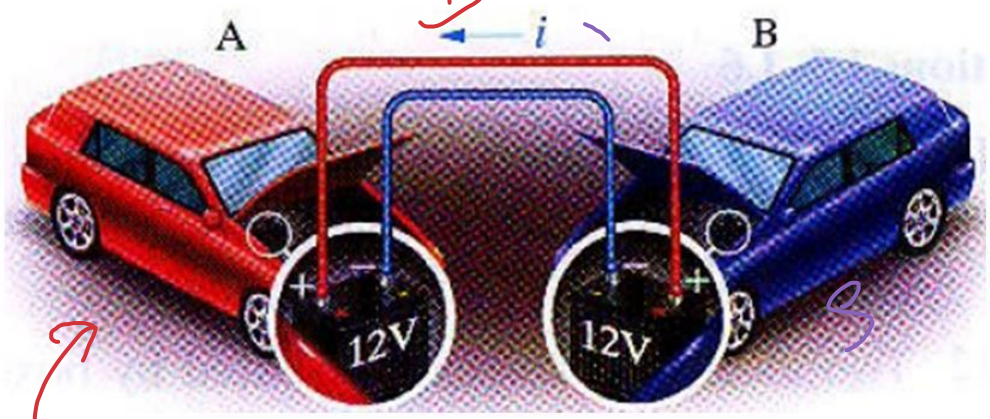

$E = Pt$

$= 360 \times 60$

$= 21\,600\,J$

$P = Vi = 360$

red car has the dead battery

$P_R = +12 \times 30 =$

$P_B = -12 \times 30 = -360\,W$

Solution

a) In car A, the current i is in the direction of the voltage drop across the 12 V battery (the current i flows into the + terminal of the battery of car A). Thus using the passive sign convention,

$$p = vi = 30 \times 12 = 360 \text{ W}$$

> 0

since the power is positive, the battery in car A is absorbing power, so car A must have the "dead" battery.

b) $w(t) = \int_0^t p\,dx; \qquad 1 \text{ min} = 60 \text{ s}$ 60

$$w(60) = \int_0^{60} 360\,dx$$

$$w = 360(60 - 0) = 360(60) = 21{,}600 \text{ J} = 21.6 \text{ kJ}$$

$E = Pt \quad (J)$

CHAPTER 2 – Circuit Elements

There are five ideal basic circuit elements:

- resistors,
- voltage sources,
- current sources,
- inductors, and
- capacitors.

Electrical Resistance

- Resistance is the capacity of materials to holdback the flow of current or, more specifically, the flow of electric charge.
- The circuit element used to model this behavior is the resistor.

Resistance

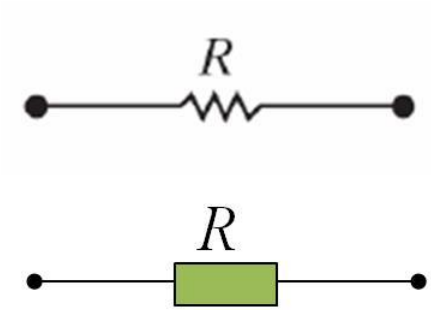

Real

Voltage and current sources

V I

- An electrical source is a device that is capable of converting non-electric energy to electric energy and vice versa.

  Example: battery, generator, etc.

- Ideal voltage and current sources

  – An ideal voltage source is a circuit element that maintains a prescribed voltage across its terminal regardless of the current flowing in those terminals.

  – An ideal current source is a circuit element that maintains a prescribed current across its terminal regardless of the voltage across those terminals.

Independent and dependent sources

- An independent source establishes a voltage or current without relying on voltage or currents elsewhere in the circuit.
- A dependent source establishes a voltage or current whose value depends on the value of a voltage or current elsewhere in the circuit.

example

$.8 V_0$

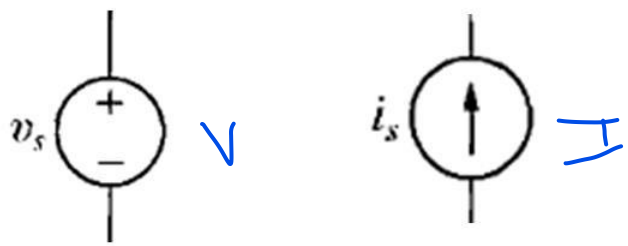

V I

Voltage source Current source

V I

Controlled voltage source Controlled current source

Independent

Dependent

Example 2.1

Which connection is valid and which is not?

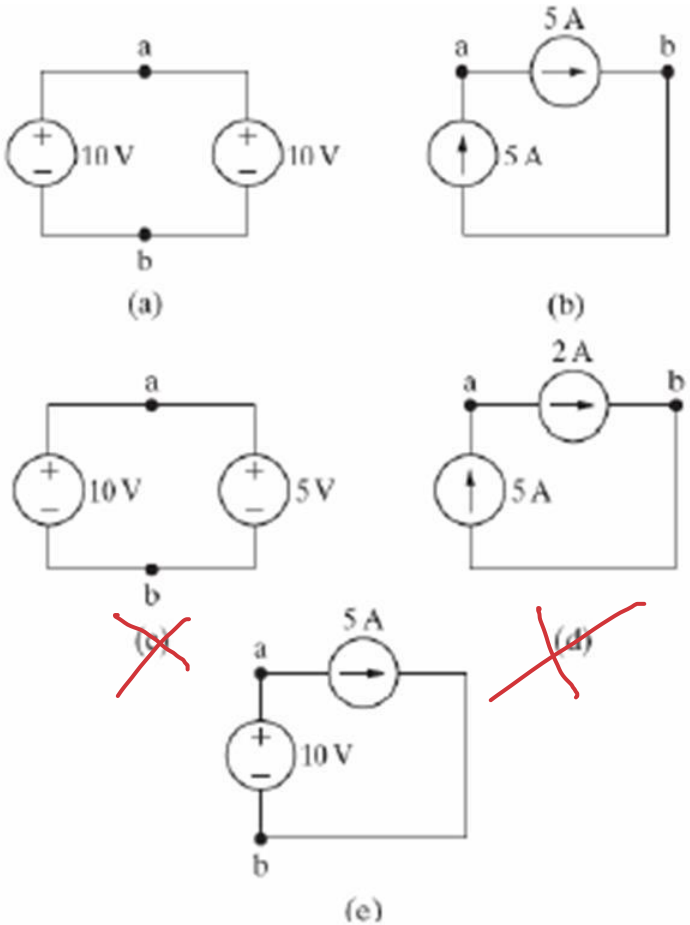

#	Sol.
(a)	Valid
(b)	Valid
(c)	Not Valid
(d)	Not Valid
(e)	Valid

Note:
Valid only theoretically.

careful with the sign + −

Ohm's Law

Careful

It is the algebraic relationship between voltage and current for a resistor

$I = \frac{U}{R}$

$$\boxed{v = iR}$$

$R = \frac{U}{I}$

$V = IR$

v = the voltage in volts V

i = the current in amperes A

R = the resistance in ohms (Ω)

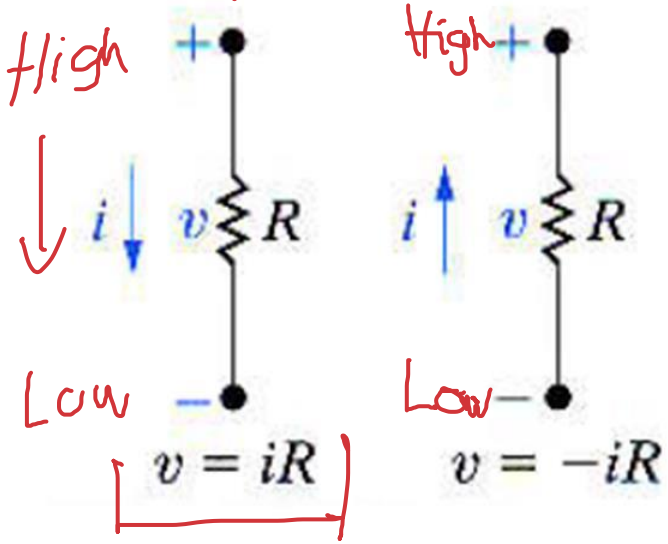

Ω, KΩ, MΩ

+ → −

⇒ +

Ohm's Law (cont.)

- The **conductance** "G" is the reciprocal of the resistance.

$R = \frac{V}{I}$

$$i = \frac{v}{R} = Gv$$

$= G = \frac{V}{R}$

- The **conductance** is measured in <u>siemens</u> (S) or <u>mho</u> (℧)

- Examples: R = 8 Ω → G = 0.125 ℧

- Power:

$$p = vi = (iR)i = i^2R = \frac{i^2}{G}$$

IR

$$p = vi = v\left(\frac{v}{R}\right) = \frac{v^2}{R} = v^2G$$

$\frac{v}{R}$

$V^2 \div R$

$= V^2 \times \frac{1}{R}$

Example 2.2

In each circuit in the Figure, either the value of *v or i is* not known.

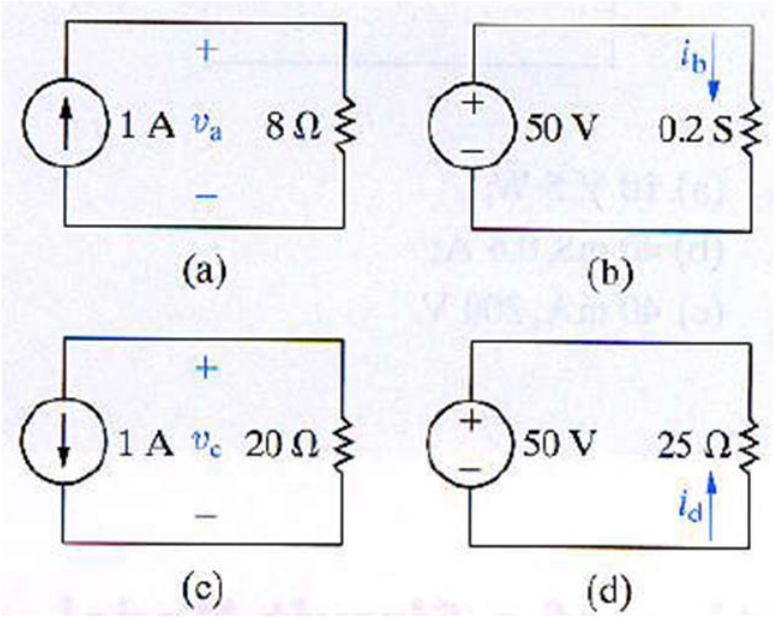

a) Calculate the values of *v and i.*
b) Determine the power dissipated in each resistor.

Solution

$U = IR =$

a) The voltage v_a *in Fig. (a) is a drop in the direction* of the current in the resistor. Therefore, $V_a = (1)(8) = 8$ V.

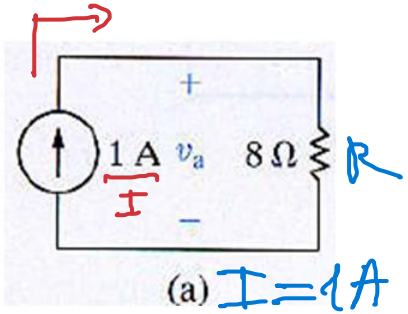

R

I

$I = 1A$

$U = 8V$

The current i_b *in the resistor with a conductance* of 0.2 S in Fig. (b) is in the direction of the voltage drop across the resistor. Thus $i_b = (50)(0.2) = 10$ A.

$i = V \times G$

$$\boxed{I = \frac{U}{R} = G}$$

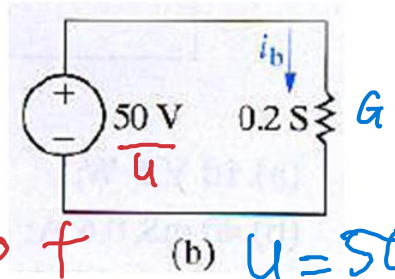

G

U

$U = 50V$

$I = 10A$

The voltage v_c *in Fig. (c) is a rise in the direction* of the current in the resistor. Hence $v_c = -(1)(20) = -20$ V.

more from − to +

The current i_d *in the 25 Ω resistor in Fig. (d)* is in the direction of the voltage rise across the resistor. So $i_d = -50/25 = -2$ A

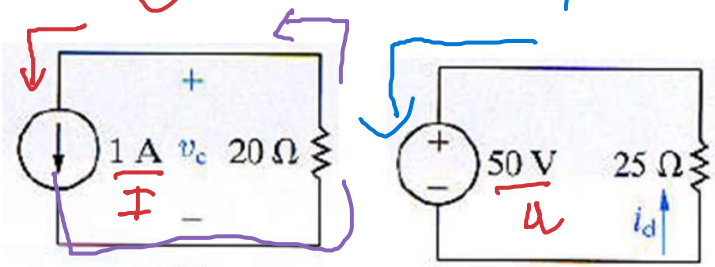

I

U

$I = 1A$

$U = -20V$

$U = 50V$

$I = -2A$

above from

− to +

b) The power dissipated in each of the four resistors is

A) $$p_{8\Omega} = \frac{(8)^2}{8} = (1)^2(8) = 8 \text{ W},$$

$$p = \frac{V^2}{R} = i^2 R$$

$$p_{0.2S} = (50)^2(0.2) = 500 \text{ W},$$

$$p_{20\Omega} = \frac{(-20)^2}{20} = (1)^2(20) = 20 \text{ W},$$

$$p_{25\Omega} = \frac{(50)^2}{25} = (-2)^2(25) = 100 \text{ W}.$$

$$P = I^2 R = \frac{a^2}{R} = \pm I V$$

Example 2.3

U I ?

a) If v_g=1 kV and i_g = 5 mA, find R & power.

ans.:

$$R = \frac{v_g}{i_g} = \frac{1\times10^3}{5\times10^{-3}} = 200\ k\Omega$$

$$p = v_g i_g = (1\times10^3)\times(5\times10^{-3}) = 5\ W$$

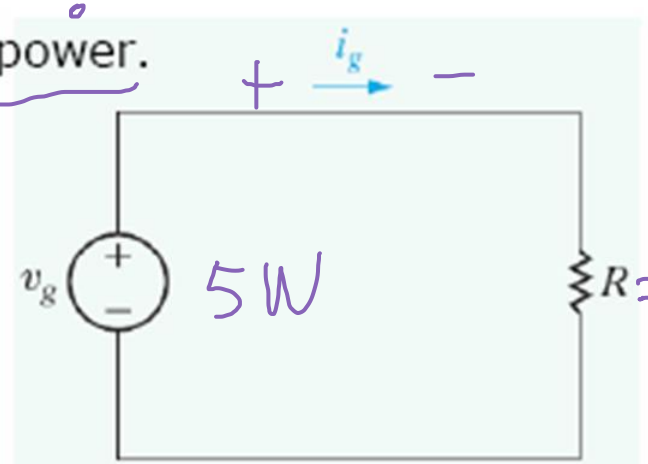

b) If R=300 Ω and the power absorbed by R is 480 mW. Find i_g and v_g.

P > 0 P

ans.: ?

$$R = \frac{v_g}{i_g} = 300\ \Omega \quad \frac{v^2}{R} = i^2 R = p = v_g i_g = 480\ mW$$

$$\frac{v_g}{i_g}\times i_g v_g = v_g^{\ 2} = 300\times480\times10^{-3} = 144 \quad \leftarrow \frac{v^2}{R} = vi = P$$

$$v_g = \sqrt{144} = 12\ V \longrightarrow i_g = \frac{12}{300} = 0.04\ A \quad \Leftrightarrow v^2 = vi \times \frac{v}{i}$$

300 480 $\sqrt{144}$

Kirchhoff's Law

node

- A node
  - Point where two or more circuit elements meet.
  - Nodes a, b, c or d.

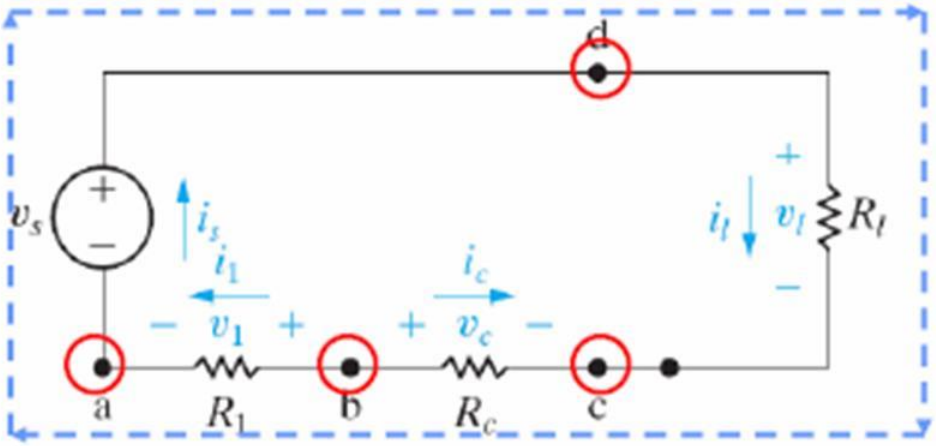

- A closed path or loop
  - Starting at an arbitrarily selected node, we trace a closed path in a circuit through selected basic circuit elements and return to the original node without passing through any intermediate node more than once.
  - Loop a → d → c → b → a

mesh → smallest loop

Kirchhoff's Law

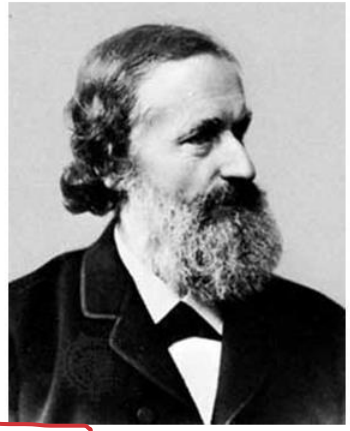

node

current

arrow

- Kirchhoff's Current Law (KCL)

  The algebraic sum of all the currents at any node in the circuit equals zero

$i_1 - i_2 + i_3 = 0$

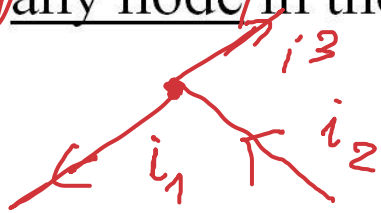

$i_2 = i_{..}$

- Kirchhoff's Voltage Law (KVL)

  The algebraic sum of all the voltages around any close path equals zero

voltage

path

+ or −

loop

Kirchhoff's Current Law

- Assign an algebraic sign corresponding to a reference direction.
  - Positive sign to a current leaving.
  - Negative sign to current entering the node.

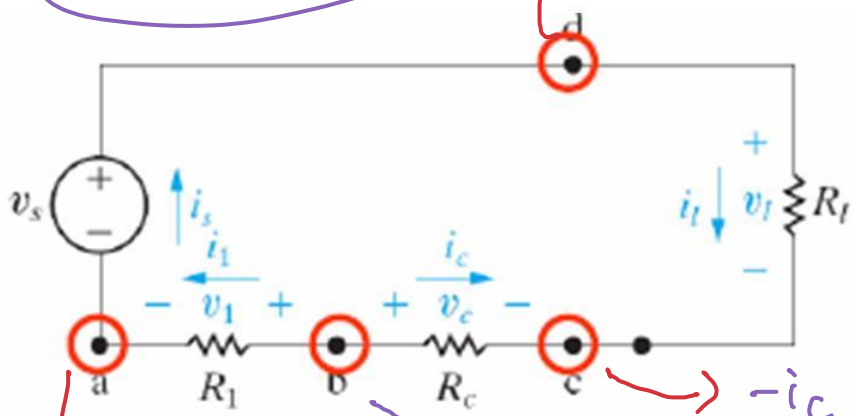

$-i_s + i_1 = 0$

$-i_1 + i_s$

$i_1 + i_c = 0$

$-i_c - i_l = 0$

At node a $\longrightarrow$ $i_s - i_1 = 0$

At node b $\longrightarrow$ $i_1 + i_c = 0$

At node c $\longrightarrow$ $-i_c - i_l = 0$

At node d $\longrightarrow$ $i_l - i_s = 0$

$i_s = i_1$

$i_1 = -i_c$

$$\boxed{i_1 = -i_c = i_s = i_l}$$

$-i_c = i_l$

$i_l = i_s$

Note:

In any circuit with n nodes, $n - 1$ independent current equations can be derived from Kirchhoff's current law.

Kirchhoff's Voltage Law

loop

- Assign an algebraic sign (reference direction) to each voltage in the loop.
  - Positive sign to a voltage rise requires assigning a negative sign to a voltage drop.

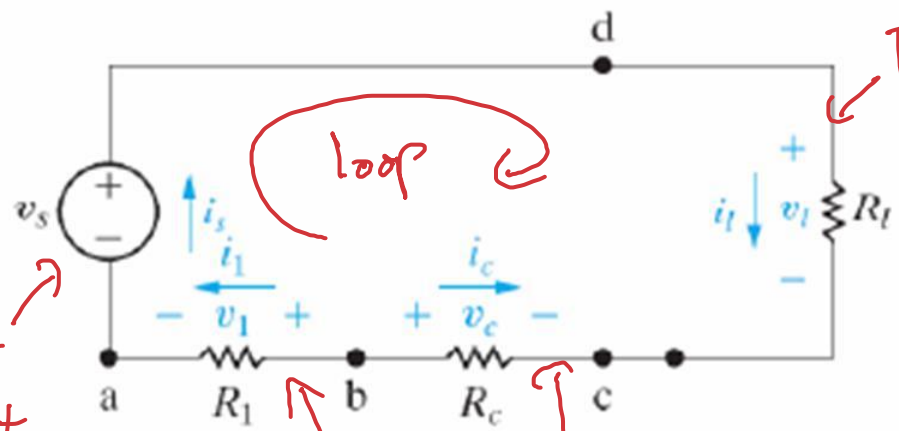

met ⊖ First

First First

$$-v_s + v_l - v_c + v_1 = 0$$

$(a \rightarrow d \rightarrow c \rightarrow b \rightarrow a)$

- Finally, applying Ohm's law

$$v_1 = i_1 R_1 \qquad v_c = i_c R_c \qquad v_l = i_l R_l$$

Kirchhoff's Law

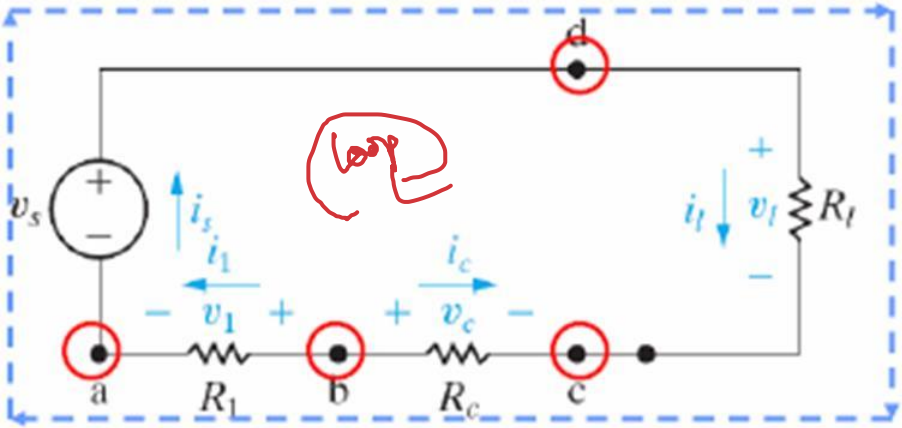

node

a) $i_s - i_1 = 0$

b) $i_1 + i_c = 0$

d) $i_l - i_s = 0$

KCL → current → node

$-v_s + v_l - v_c + v_1 = 0$

KVL

voltage

$v_1 = i_1 R_1$

$v_c = i_c R_c$

$v_l = i_l R_l$

Ohm's Law

$$\boxed{-v_s + i_1 R_l + i_1 R_c + i_1 R_1 = 0}$$

Final

Solve Electrical problem

Example 2.4

Sum the currents at each node in the circuit shown in Figure. Note that there is no connection dot (•) in the center of the diagram, where the 4 Ω branch crosses the branch containing the ideal current source i_a.

- Apply KCL to the circuit?

4 nodes

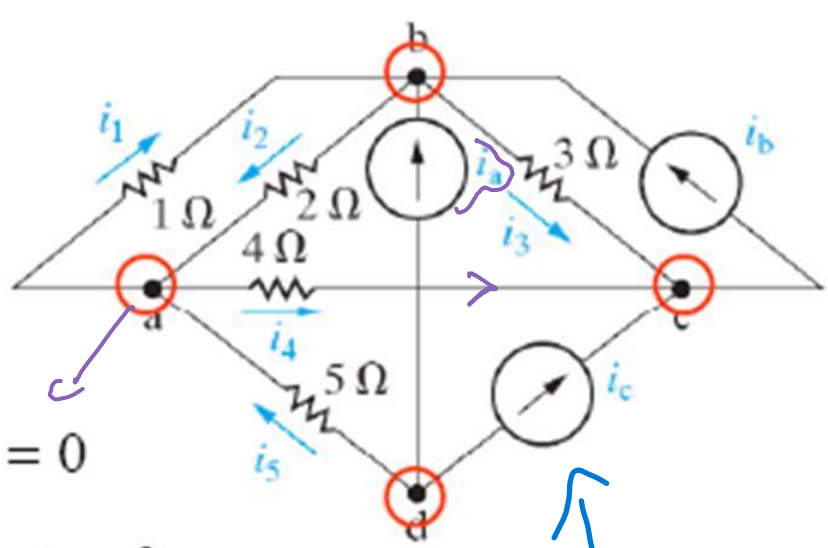

In writing the equations, we use a positive sign for a current leaving a node. The four equations are +

At node a $\quad i_1 + i_4 - i_2 - i_5 = 0$

At node b $\quad i_2 + i_3 - i_1 - i_b - i_a = 0$

At node c $\quad i_b - i_3 - i_c - i_4 = 0$

At node d $\quad i_5 + i_c + i_a = 0$

Direction is assumed

Example 2.5

Sum the voltages around each designated path in the circuit shown in Figure

- Apply KVL to the circuit?

4 loops

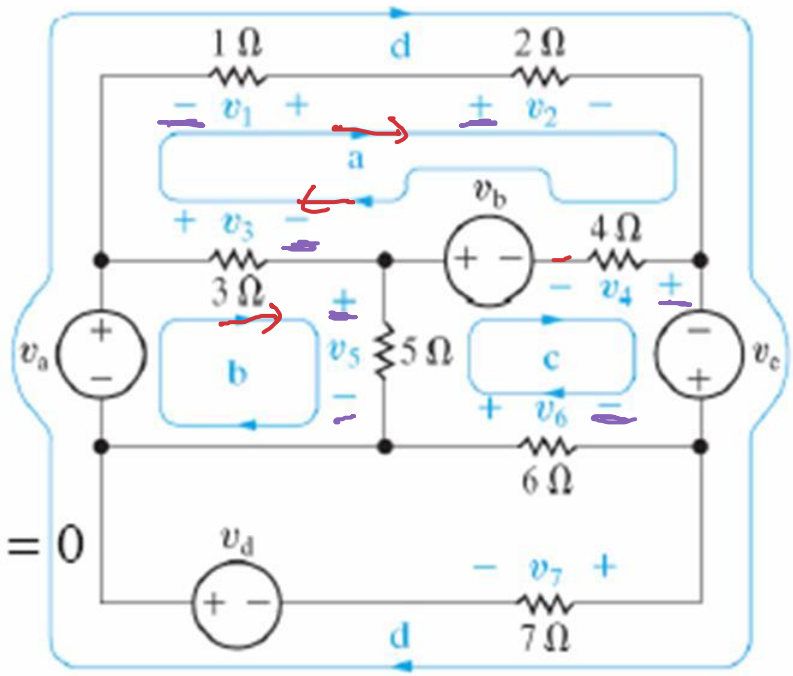

In writing the equations, we use a positive sign for a voltage drop. The four equations are

Loop a $\quad -v_3 - v_1 + v_2 + v_4 - v_b = 0$

Loop b $\quad -v_a + v_3 + v_5 = 0$

Loop c $\quad v_b - v_4 - v_c - v_6 - v_5 = 0$

Loop d $\quad -v_a - v_1 + v_2 - v_c + v_7 - v_d = 0$

Example 2.6

- Use *KCL*, *KVL* & *Ohm's* law to find i_o, verify that the ~~total~~ power generated ~~equals~~ the ~~total dissipated~~.

$P > 0$

$\boxed{P < 0}$

verify

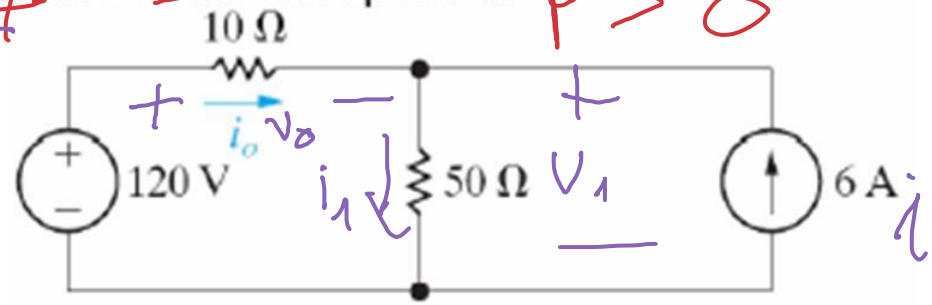

Ans.:

- Redraw the circuit and assign unknown currents.
- Label the nodes.
- "2" nodes → "1" KCL

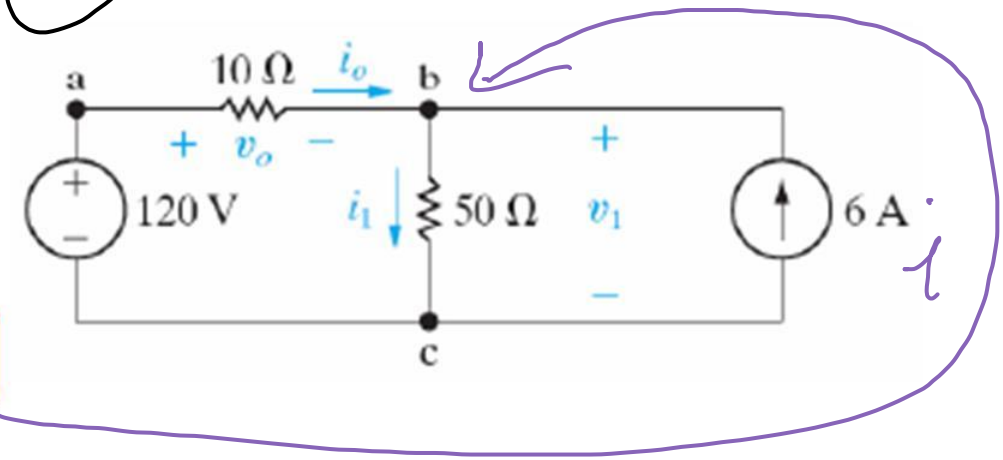

At node "b" $\boxed{i_1 - 6 - i_o = 0}$

Example 2.6 (cont.)

Assign it

- Apply KVL

(1) $v_o + v_1 - 120 = 0$

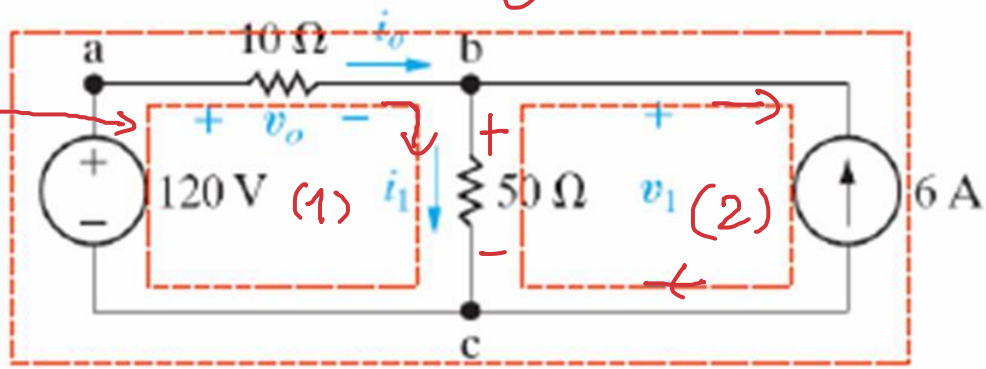

- Ohm's Law

$v_o = i_o 10$

$v_1 = i_1 50$

$\Rightarrow$ $10i_o + 50i_1 - 120 = 0$

node B: $\boxed{i_1 - 6 - i_o = 0}$ & $\boxed{10i_o + 50i_1 - 120 = 0}$

- Solving → $i_o = -3\text{ A}$ $i_1 = 3\text{ A}$

$P > 0$

Example 2.6 (cont.)

4 components $\begin{cases} P_{10\Omega} \\ P_{50\Omega} \\ P_{120V} \\ P_{6A} \end{cases}$

- Power dissipated in the resistors

$$p_R = i^2 R$$

$$p_{50\Omega} = (3)^2(50) = 450 \text{ W}$$

$$p_{10\Omega} = (3)^2(10) = 90 \text{ W}$$

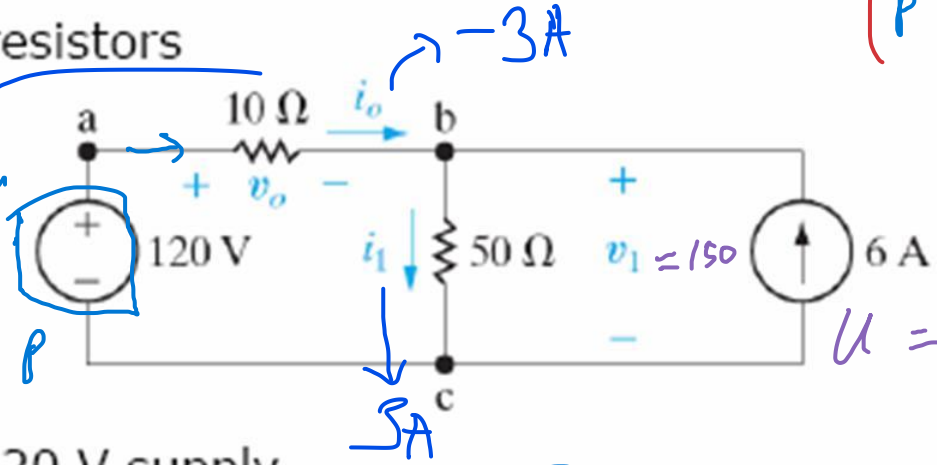

$U = IR$

- Power delivered to the 120 V supply

$$p_{120V} = iv = 3 \times \overset{V_a}{120} = 360 \text{ W} > 0$$

$P = \pm Vi$

- Power delivered by the 6 A supply

$$p_{6A} = iv = 6 \times \overset{V_1}{150} = 900 \text{ W} < 0$$

— Resister Always (+)

— the Source can be (+) or (−)

$$\boxed{p_{50\Omega} + p_{10\Omega} + p_{120V} = p_{6A} = 900 \text{ W}}$$

$P_{120V} = -120 \times (-3) = 360W$

$P_{6A} = -150 \times 6 = -900W < 0$

Circuit containing dependent sources

Find v_o & i_o?

Ans.:

node

- KCL at b

$$i_o - i_\Delta - 5i_\Delta = 0$$

$$i_o = 6i_\Delta$$

- KVL at (a → b → c)

$$i_\Delta 5 + i_o 20 - 500 = 0$$

V_{i_Δ} V_o

$$i_\Delta 5 + (i_\Delta 6) \times 20 = 500$$

$$\boxed{i_\Delta = 4\text{ A}}$$

$$i_o = 24\text{ A}$$

$$v_o = 20 i_o = 480\text{ V}$$

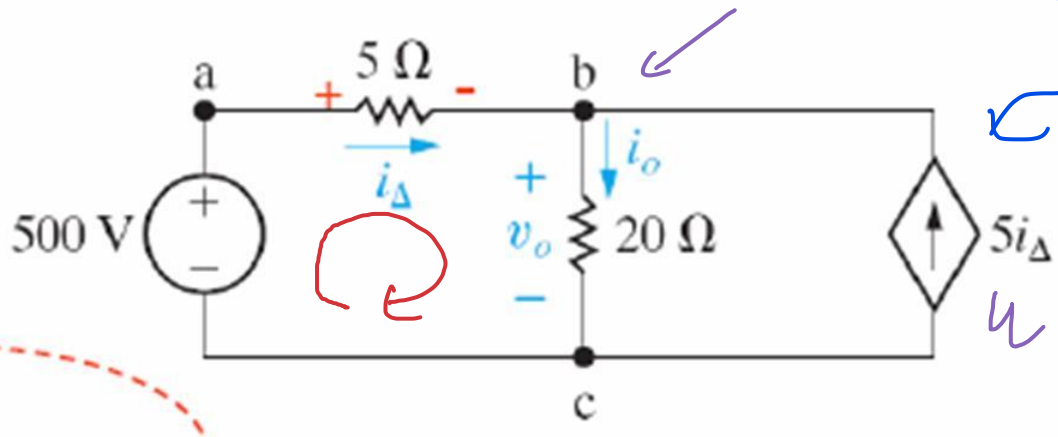

KCL

$4 + 5 \times 4 = i_o$

$\Leftrightarrow 24 = i_o$

$v_o = iR = 20 \times 24 = 480\text{ V}$

develop → Negative
dissipated → possitive.

Example 2.7

Use KL & Ohms law to find v_o, and show that total power developed equals the total power dissipated.

Ans.: $P<0$ $P>0$

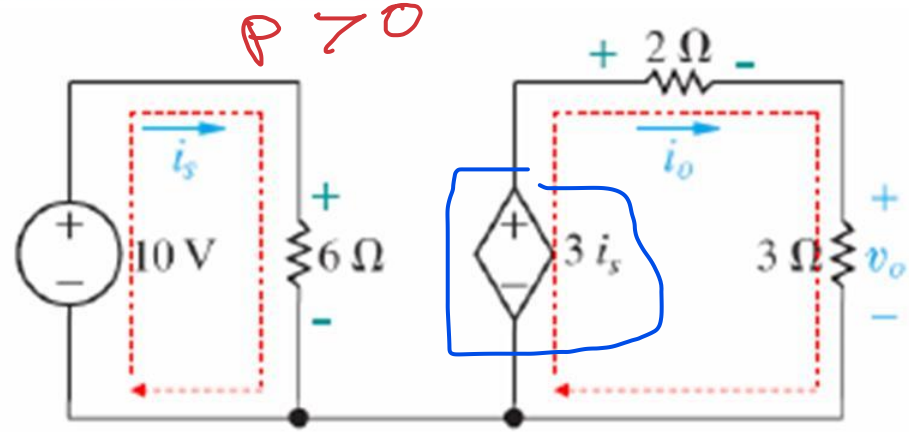

- Two closed paths

(KVL & Ohm's Law)

$i_s 6 - 10 = 0 \rightarrow i_s = 5/3\,\text{A}$

$i_o 2 + i_o 3 - i_s 3 = 0 \rightarrow i_o = 1\,\text{A}$

$v_o = i_o 3 = 3\,\text{V}$

Hãy thử $P>0$

- Power Dissipated

$P = P_{6\Omega} + P_{2\Omega} + P_{3\Omega} = i_s^2 6 + i_o^2 2 + i_o^2 3$

$\boxed{P = 16.7 + 2 + 3 = 21.7\,\text{W}}$ >0

Nguồn phát

- Power Developed

$P = P_{10\text{V}} + P_{3i_s} = i_s 10 + i_o \times 3 i_s$

$\boxed{P = 16.7 + 5 = 21.7\,\text{W}}$ <0

$= -21.7\,\text{W}$

Example 2.8

Find i_1, v, and power generated and absorbed?

Ans.:

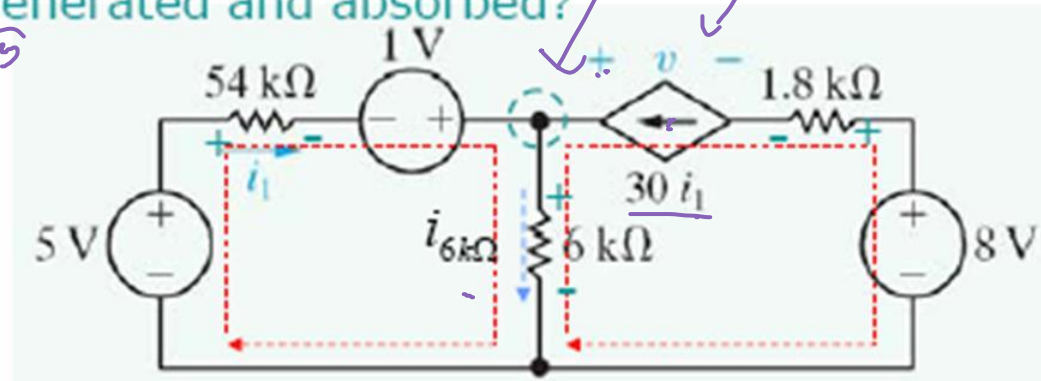

KCL $i_{6k\Omega} - i_1 - 30i_1 = 0$

$i_{6k\Omega} = 31i_1$.

KVL Left $i_1(54\times10^3) - 1 + i_{6k\Omega}(6\times10^3) - 5 = 0 \longrightarrow i_1 = 2.5\times10^{-05}$ A

KVL Right $-31i_1(6\times10^3) + v - 30i_1(1.8\times10^3) + 8 = 0 \longrightarrow v = -2$ V

Power Dissipated $P = P_{54k\Omega} + P_{6k\Omega} + P_{1.8k\Omega} + P_{31i_1} = 0.00615$ W $= 6150\ \mu$W

Power Delivered $P = P_{5V} + P_{1V} + P_{8V} = 0.00615$ W $= 6150\ \mu$W

Example 2.9

If i_a=4 A and i_b= -2 A, respectively: Find

a. Find i_g.

b. Find the power dissipated in each resistor.

c. Find v_g.

d. Show that the power delivered by the current source is equal to the power absorbed by all other elements.

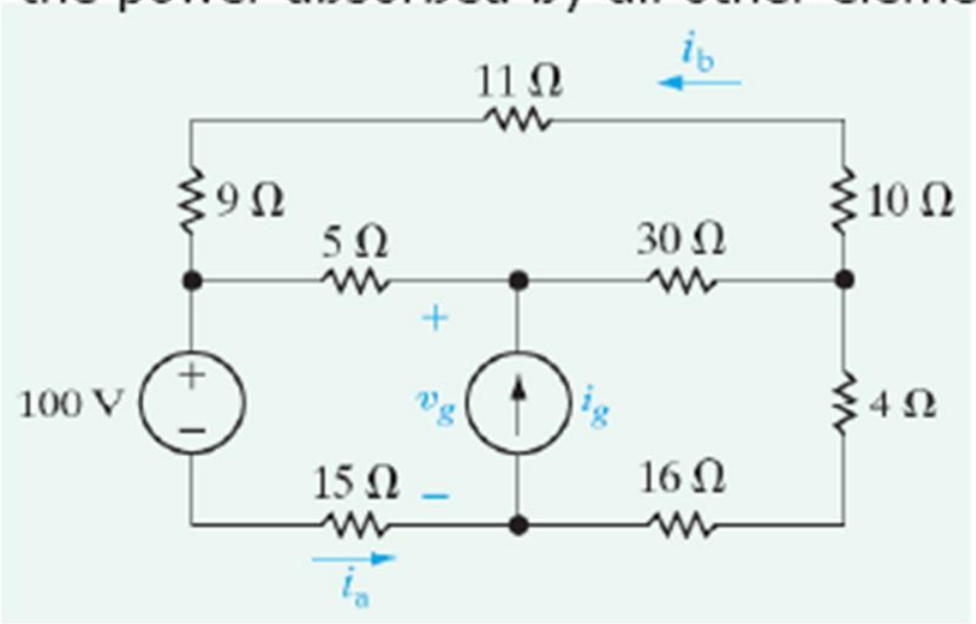

Solution

Ohm's law

$v_{15\Omega} = i_a \times 15 = 4 \times 15 = 60^V$

$v_{9\Omega} = 2 \times 9 = 18^V$

$v_{11\Omega} = 2 \times 11 = 22^V$

$v_{10\Omega} = 2 \times 10 = 20^V$

KVL on outside loop

$-60 - 100 + 18 + 22 + 20 + i_c 4 + i_c 16 = 0$

$i_c = 5A$

KCL at a

$i_g = i_c + i_a = 5 + 4 = 9A$

KCL at b

$i_d = i_c - i'_b = 5 - 2 = 3A$

KCL at c

$i_e = i'_b + i_a = 2 + 4 = 6A$

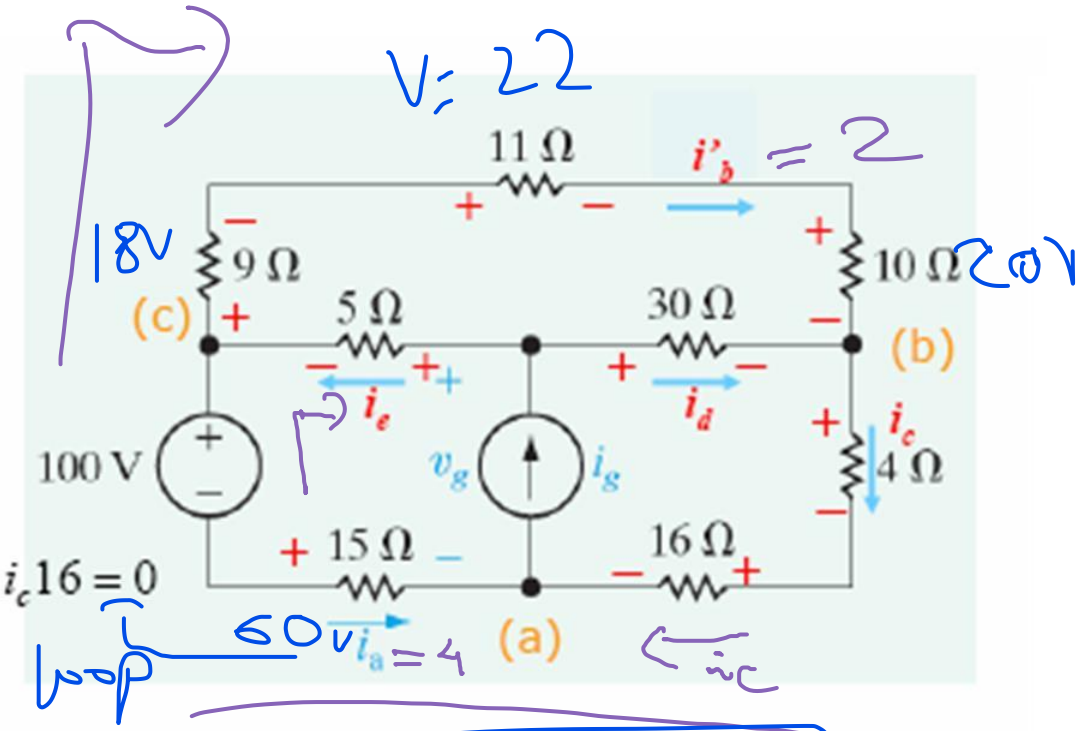

KVL on the bottom left loop

$-60 - 100 - 5 \times 6 + v_g = 0$

$v_g = 190V$

Calculate power using the formula $p = Ri^2$:

$$p_{9\,\Omega} = (9)(2)^2 = 36\,\text{W}; \qquad p_{11\,\Omega} = (11)(2)^2 = 44\,\text{W}$$

$$p_{10\,\Omega} = (10)(2)^2 = 40\,\text{W}; \qquad p_{30\,\Omega} = (30)(3)^2 = 270\,\text{W}$$

$$p_{5\,\Omega} = (5)(6)^2 = 180\,\text{W}; \qquad p_{4\,\Omega} = (4)(5)^2 = 100\,\text{W}$$

$$p_{16\,\Omega} = (16)(5)^2 = 400\,\text{W}; \qquad p_{15\,\Omega} = (15)(4)^2 = 240\,\text{W}$$

Sum the power dissipated by the resistors: > 0

$$\sum p_{\text{diss}} = 36 + 44 + 40 + 270 + 180 + 100 + 400 + 240 = 1310\,\text{W}$$

$+$

The power associated with the sources is < 0

$$p_{\text{volt-source}} = (100\,\text{V})(4\,\text{A}) = 400\,\text{W}$$

$$p_{\text{curr-source}} = -v_g i_g = -(190\,\text{V})(9\,\text{A}) = -1710\,\text{W} \quad < 0$$

Thus the total power dissipated is 1310 + 400 = 1710 W and the total power developed is 1710 W, so the power balances.