Chapter 9
Z TRANSFORM

MOTIVATION BEHIND THE Z TRANSFORM

- Another important mathematical tool in the study of signals and systems is known as the z transform.
- The z transform can be viewed as a ***generalization of the (classical) Fourier transform***.
- Due to its more general nature, the z transform has a number of ***advantages*** over the (classical) Fourier transform.
- First, the z transform representation ***exists for some sequences that do not have a Fourier transform representation***. So, we can handle some sequences with the z transform that cannot be handled with the Fourier transform.
- Second, since the z transform is a more general tool, it can provide ***additional insights*** beyond those facilitated by the Fourier transform.

MOTIVATION BEHIND THE Z TRANSFORM

- Earlier, we saw that complex exponentials are eigensequences of LTI systems.
- In particular, for a LTI system $\mathcal{H}$ with impulse response h, we have that

$$\mathcal{H}\{z^n\}(n) = H(z)z^n \quad \text{where} \quad H(z) = \sum_{n=-\infty}^{\infty} h(n)z^{-n}.$$

- Previously, we referred to H as the system function.
- As it turns out, H is the z transform of h.
- Since the z transform has already appeared earlier in the context of LTI systems, it is clearly a useful tool.
- Furthermore, as we will see, the z transform has many additional uses.

BILATERAL Z TRANSFORM

- The (bilateral) **z transform** of the sequence x, denoted $\mathcal{Z}x$ or X, is defined as

$$\mathcal{Z}x(z) = X(z) = \sum_{n=-\infty}^{\infty} x(n)z^{-n}.$$

- The **inverse z transform** of X, denoted $\mathcal{Z}^{-1}X$ or x, is then given by

$$\mathcal{Z}^{-1}X(n) = x(n) = \frac{1}{2\pi j}\oint_{\Gamma} X(z)z^{n-1}dz,$$

  where Γ is a counterclockwise closed circular contour centered at the origin and with radius r such that Γ is in the ROC of X.

- We refer to x and X as a **z transform pair** and denote this relationship as

$$x(n) \overset{\text{ZT}}{\longleftrightarrow} X(z).$$

- In practice, we do not usually compute the inverse z transform by directly using the formula from above. Instead, we resort to other means (to be discussed later).

BILATERAL AND UNILATERAL Z TRANSFORM

- Two different versions of the z transform are commonly used:
  1. the ***bilateral*** (or ***two-sided***) z transform; and
  2. the ***unilateral*** (or ***one-sided***) z transform.
- The unilateral z transform is most frequently used to solve systems of linear difference equations with nonzero initial conditions.
- As it turns out, the only difference between the definitions of the bilateral and unilateral z transforms is in the ***lower limit of summation***.
- In the bilateral case, the lower limit is $-\infty$, whereas in the unilateral case, the lower limit is 0.
- For the most part, we will focus our attention primarily on the bilateral z transform.
- We will, however, briefly introduce the unilateral z transform as a tool for solving difference equations.
- Unless otherwise noted, all subsequent references to the z transform should be understood to mean ***bilateral*** z transform.

RELATIONSHIP BETWEEN Z AND FOURIER TRANSFORM

- Let X and X_{F} denote the z and (DT) Fourier transforms of x, respectively.
- The function $X(z)$ evaluated at $z = e^{j\Omega}$ (where Ω is real) yields $X_{\mathsf{F}}(\Omega)$. That is,

$$X(e^{j\Omega}) = X_{\mathsf{F}}(\Omega).$$

- Due to the preceding relationship, the Fourier transform of x is sometimes written as $X(e^{j\Omega})$.
- The function $X(z)$ evaluated at an arbitrary complex value $z = re^{j\Omega}$ (where $r = |z|$ and $\Omega = \arg z$) can also be expressed in terms of a Fourier transform involving x. In particular, we have

$$X(re^{j\Omega}) = X'_{\mathsf{F}}(\Omega),$$

  where X'_{F} is the (DT) Fourier transform of $x'(n) = r^{-n}x(n)$.
- So, in general, the z transform of x is the Fourier transform of an exponentially-weighted version of x.
- Due to this weighting, the z transform of a sequence may exist when the Fourier transform of the same sequence does not.

EXAMPLE

Find the z transform X of the sequence

$$x(n) = a^n u(n),$$

where a is a real constant.

Solution. From the definition of the z transform, we can write

$$\begin{aligned} X(z) &= \sum_{n=-\infty}^{\infty} a^n u(n) z^{-n} \\ &= \sum_{n=0}^{\infty} a^n z^{-n} \\ &= \sum_{n=0}^{\infty} (az^{-1})^n. \end{aligned}$$

EXAMPLE

The summation converges for $\left|az^{-1}\right| < 1$. Rearranging this inequality, we obtain

$$\begin{aligned} & \left|az^{-1}\right| < 1 \\ \Rightarrow \quad & \left|a^{-1}z\right| > 1 \\ \Rightarrow \quad & \left|a^{-1}\right| |z| > 1 \\ \Rightarrow \quad & |z| > |a| . \end{aligned}$$

From the formula for the sum of an infinite geometric sequence, we can write

$$\begin{aligned} X(z) &= \frac{1}{1 - az^{-1}} \\ &= \frac{z}{z - a} \quad \text{for } |z| > |a|. \end{aligned}$$

Thus, we have

$$a^n u(n) \xleftrightarrow{\text{ZT}} \frac{1}{1 - az^{-1}} \quad \text{for } |z| > |a|.$$

EXAMPLE

Find the z transform X of the sequence

$$x(n) = -a^n u(-n-1),$$

where a is a real constant.

Solution. From the definition of the z transform, we can write

$$\begin{aligned} X(z) &= \sum_{n=-\infty}^{\infty} -a^n u(-n-1) z^{-n} \\ &= -\sum_{n=-\infty}^{\infty} a^n u(-n-1) z^{-n} \\ &= -\sum_{n=-\infty}^{-1} a^n z^{-n} \\ &= -\sum_{n=1}^{\infty} a^{-n} z^n \\ &= -\sum_{n=1}^{\infty} (a^{-1} z)^n. \end{aligned}$$

EXAMPLE

$X(z)$ only converges for $|a^{-1}z| < 1$. Rearranging this inequality, we obtain

$$\begin{aligned} & |a^{-1}z| < 1 \\ \Rightarrow \quad & |az^{-1}| > 1 \\ \Rightarrow \quad & |a|\,|z^{-1}| > 1 \\ \Rightarrow \quad & |z| < |a|\,. \end{aligned}$$

From the formula for the sum of an infinite geometric sequence, we can write

$$\begin{aligned} X(z) &= -\frac{a^{-1}z}{1-a^{-1}z} \\ &= \frac{1}{1-az^{-1}} \\ &= \frac{z}{z-a} \quad \text{for } |z| < |a|. \end{aligned}$$

Region of Convergence (ROC)

DISK

- A **disk** with center 0 and radius r is the set of all complex numbers z satisfying

$$|z| < r,$$

where r is a real constant and $r > 0$.

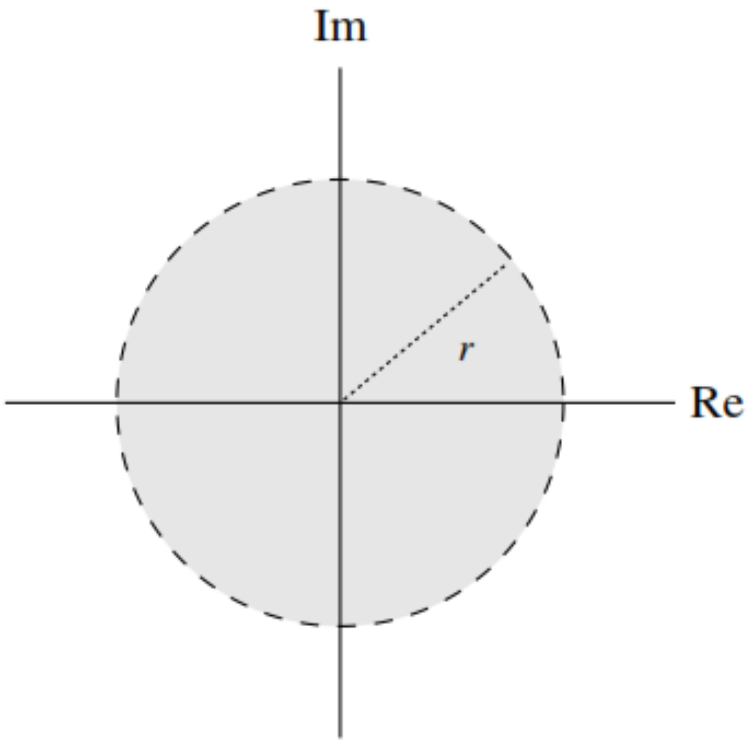

ANNULUS

- An **annulus** with center 0, inner radius r_0, and outer radius r_1 is the set of all complex numbers z satisfying

$$r_0 < |z| < r_1,$$

where r_0 and r_1 are real constants and $0 < r_0 < r_1$.

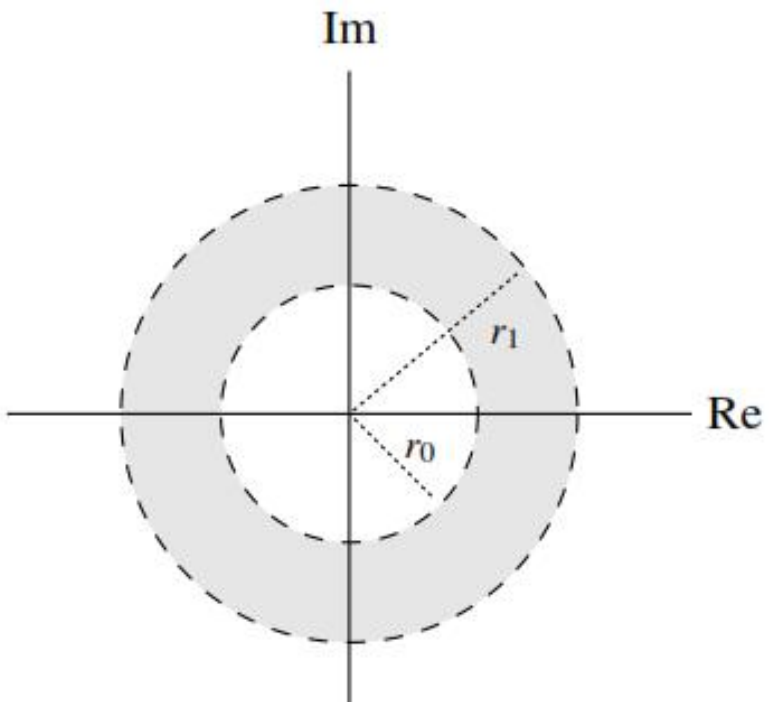

CIRCLE EXTERIOR

- The **exterior of a circle** with center 0 and radius r is the set of all complex numbers z satisfying

$$|z| > r,$$

where r is a real constant and $r > 0$.

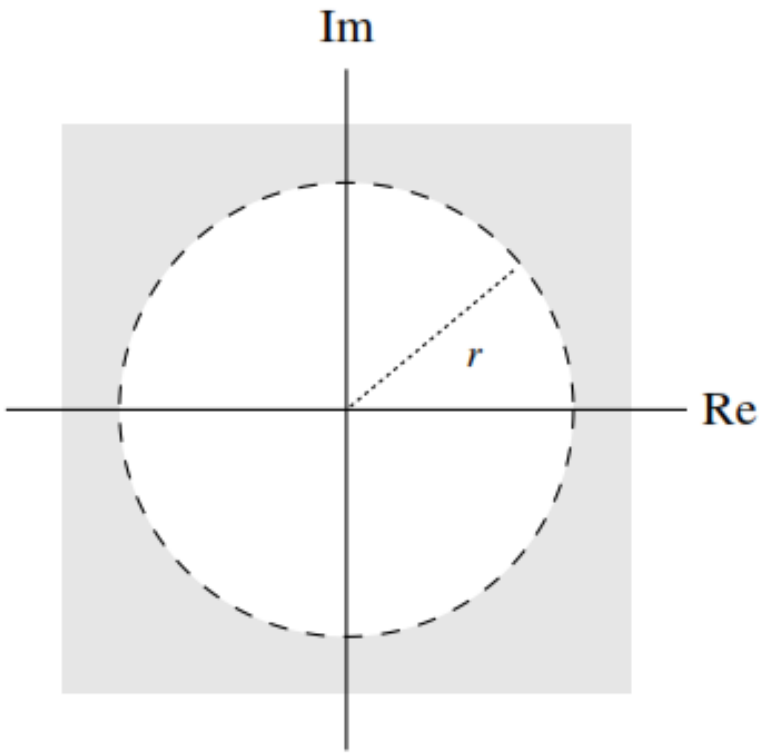

EXAMPLE: SET INTERSECTION

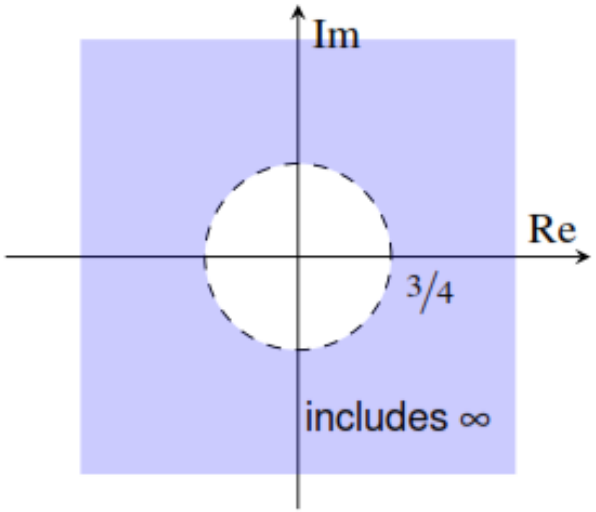

R_1

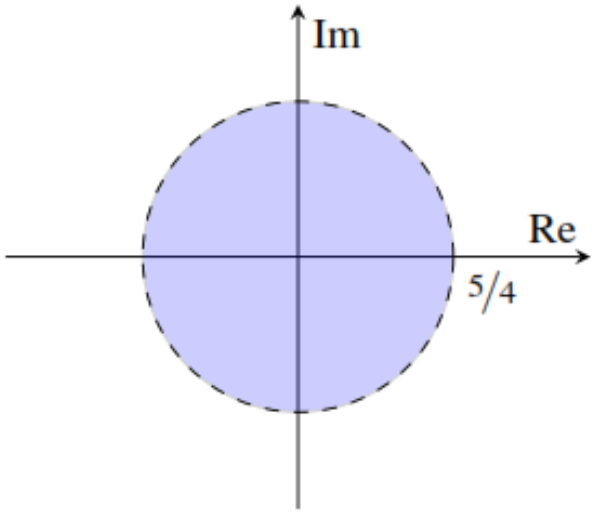

R_2

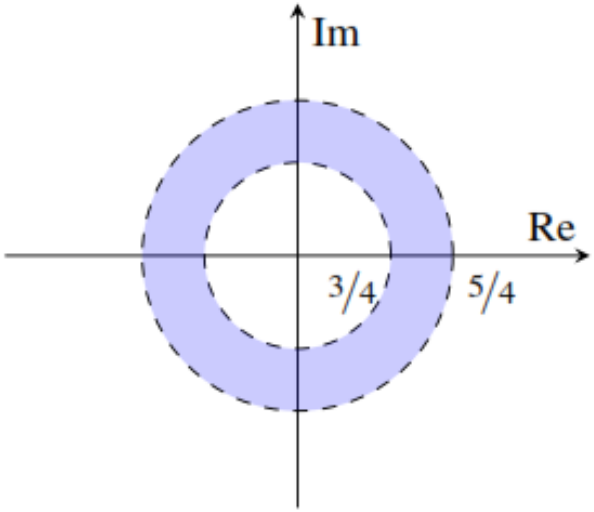

$R_1 \cap R_2$

EXAMPLE: SCALAR MULTIPLE OF A SET

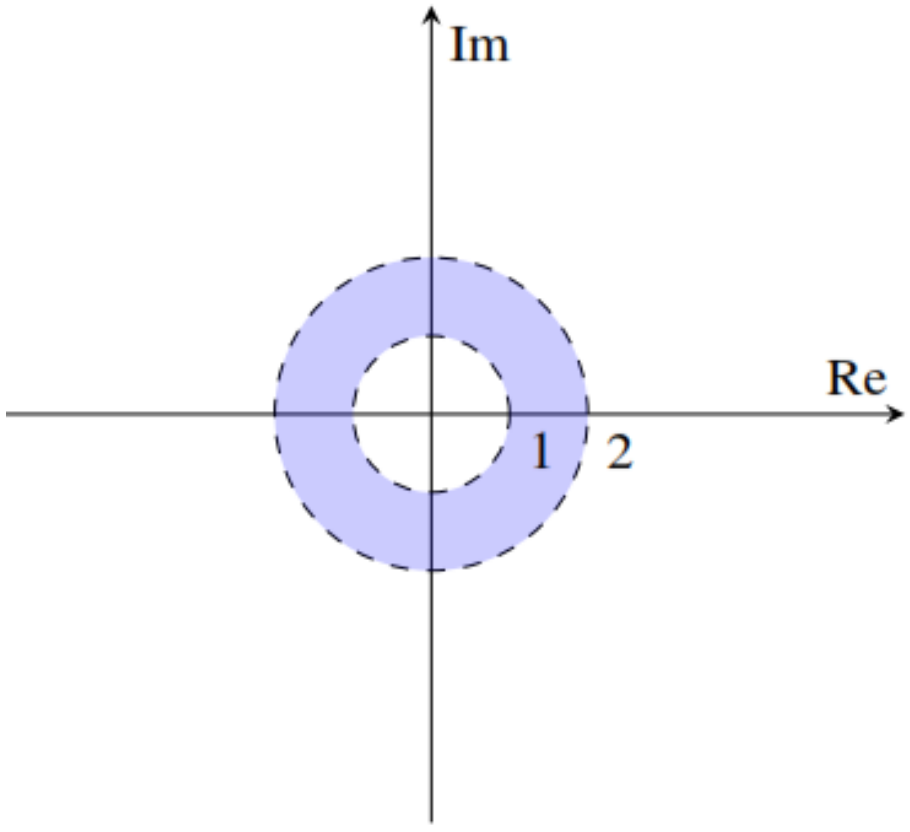

R

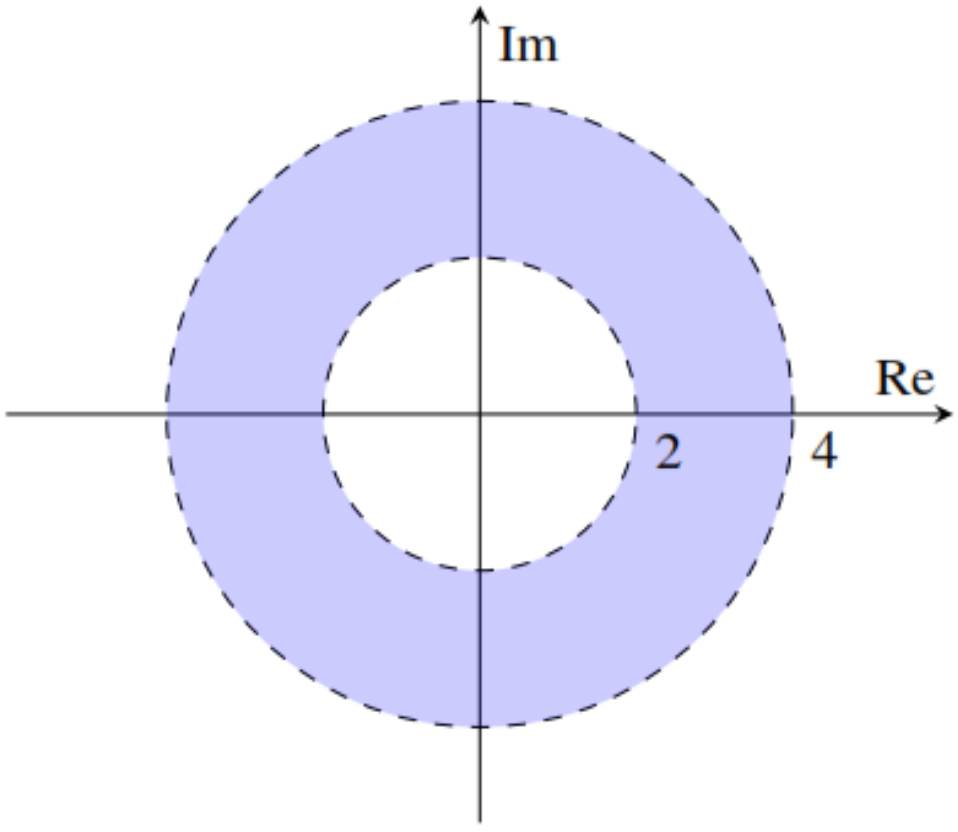

$2R$

EXAMPLE: RECIPROCAL OF A SET

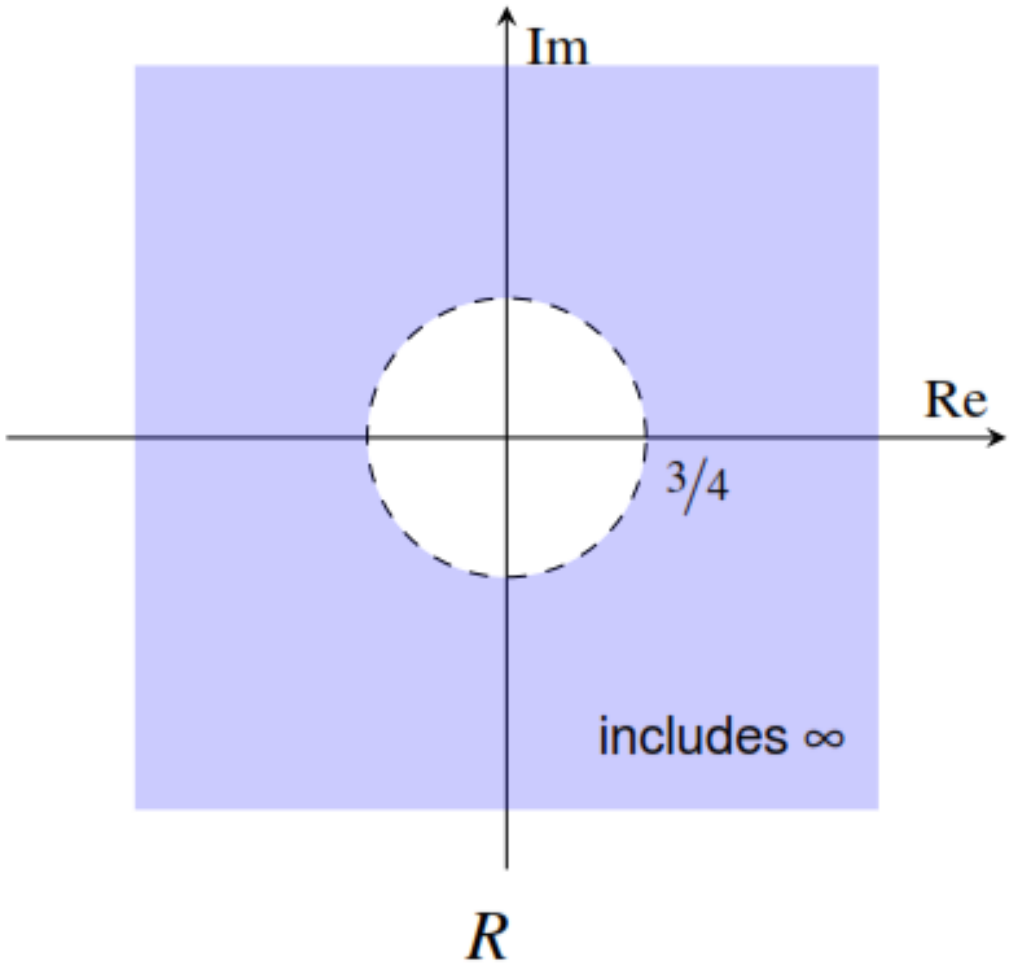

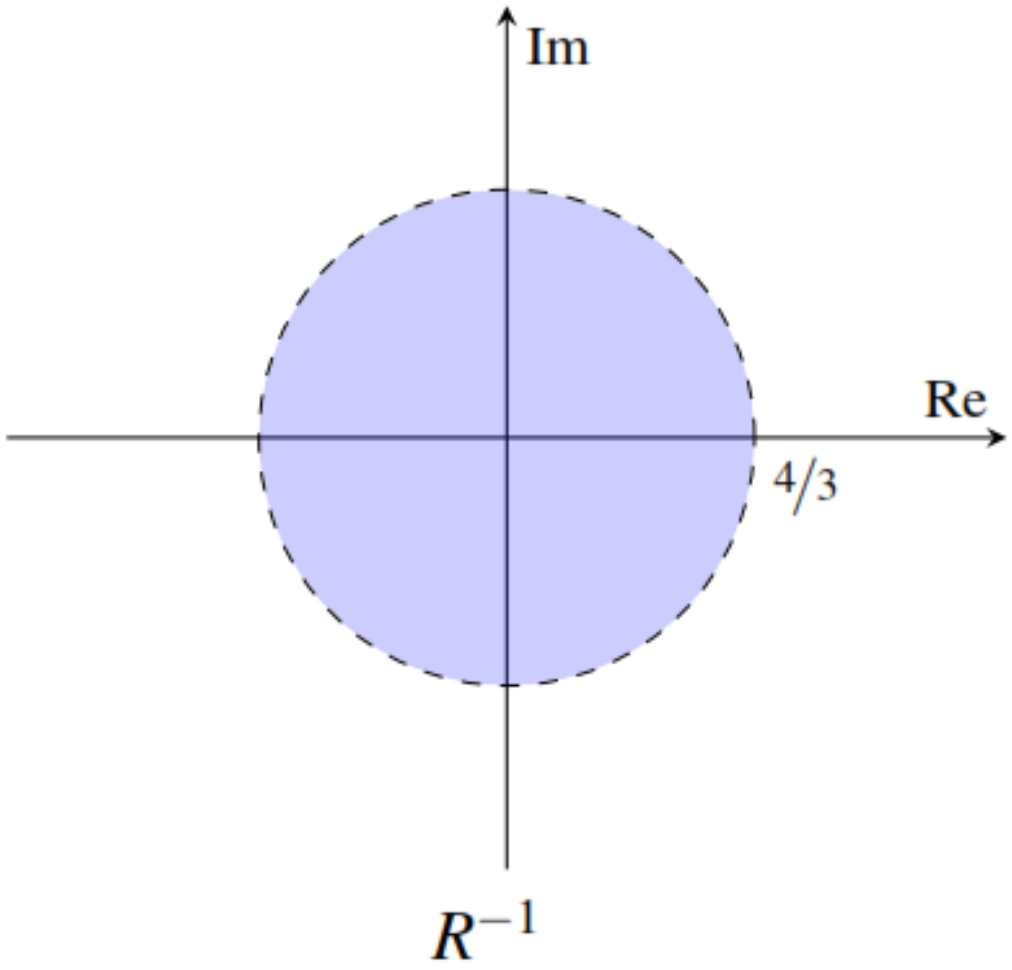

REGION OF CONVERGENCE (ROC)

- As we saw earlier, for a sequence x, the complete specification of its z transform X requires not only an algebraic expression for X, but also the ROC associated with X.
- Two very different sequences can have the same algebraic expressions for X.
- Now, we examine some of the constraints on the ROC (of the z transform) for various classes of sequences.

PROPERTY 1: GENERAL FORM

- The ROC of a z transform consists of ***concentric circles centered at*** 0 in the complex plane.
- That is, if a point z_0 is in the ROC, then the circle centered at 0 passing through z_0 (i.e., $|z| = |z_0|$) is also in the ROC.
- Some examples of sets that would be either valid or invalid as ROCs are shown below.

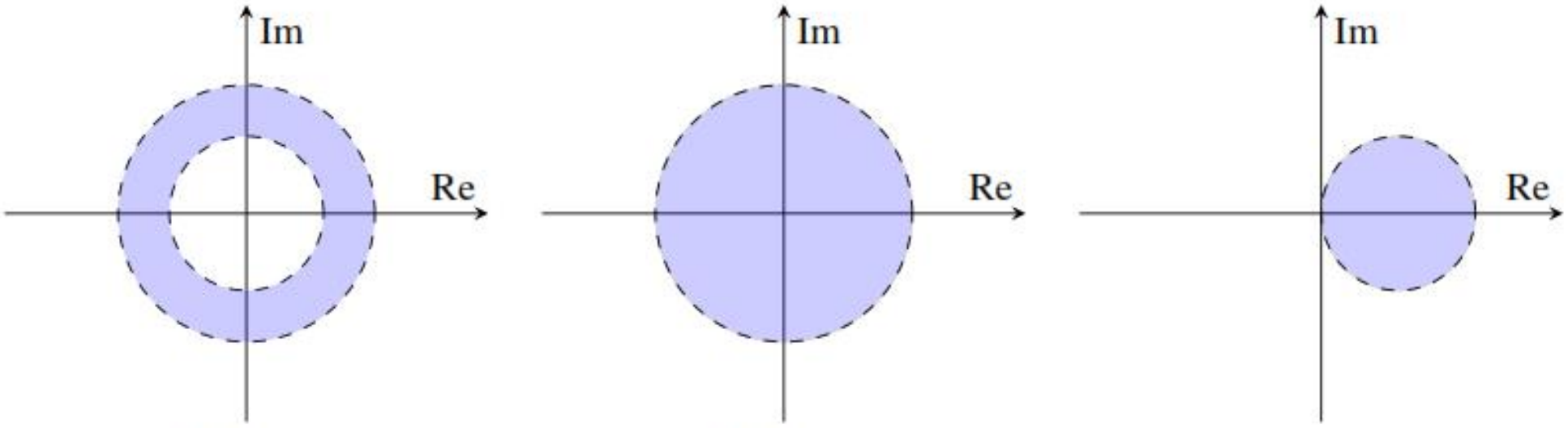

Valid Valid Invalid

PROPERTY 2: RATIONAL Z TRANSFORMS

- If a z transform X is a ***rational*** function, then the ROC of X ***does not contain any poles*** and is ***bounded by poles or extends to infinity***.
- Some examples of sets that would be either valid or invalid as ROCs of rational z transforms are shown below.

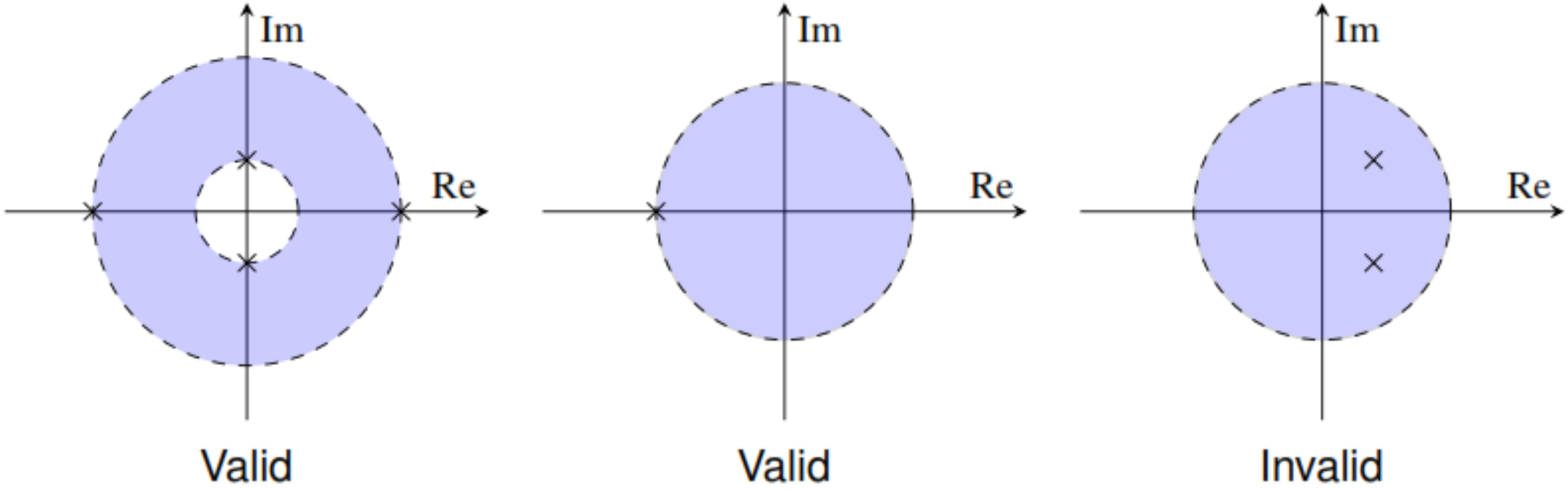

PROPERTY 3: FINITE DURATION SEQUENCES

- If a sequence x is ***finite duration*** and its z transform X converges for at least one point, then X converges for ***all points*** the complex plane, ***except possibly*** 0 ***and/or*** ∞.
- Some examples of sets that would be either valid or invalid as ROCs for X, if x is finite duration, are shown below.

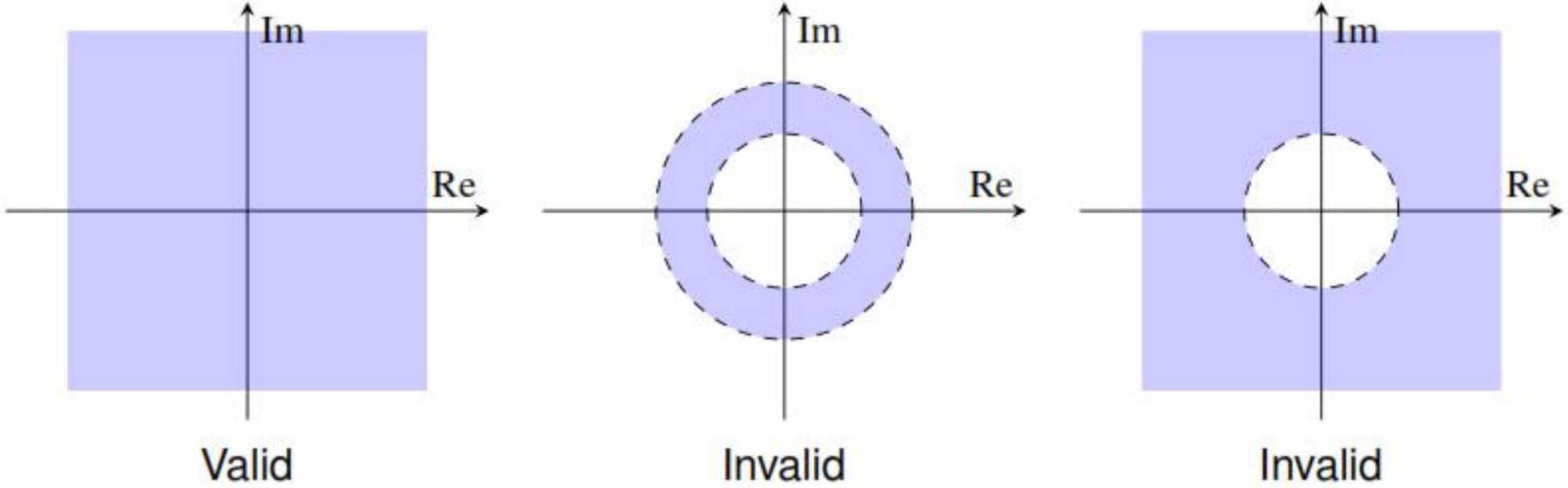

PROPERTY 4: RIGHT SIDED SEQUENCES

- If a sequence x is ***right sided*** and the circle $|z| = r_0$ is in the ROC of $X = \mathcal{Z}x$, then all (finite) values of z for which $|z| > r_0$ will also be in the ROC of X (i.e., the ROC contains the exterior of a circle centered at 0, possibly including ∞).
- Thus, if x is ***right sided but not left sided***, the ROC of X is the ***exterior of a circle centered at*** 0, possibly including ∞.
- Examples of sets that would be either valid or invalid as ROCs for X, if x is right sided but not left sided, are shown below.

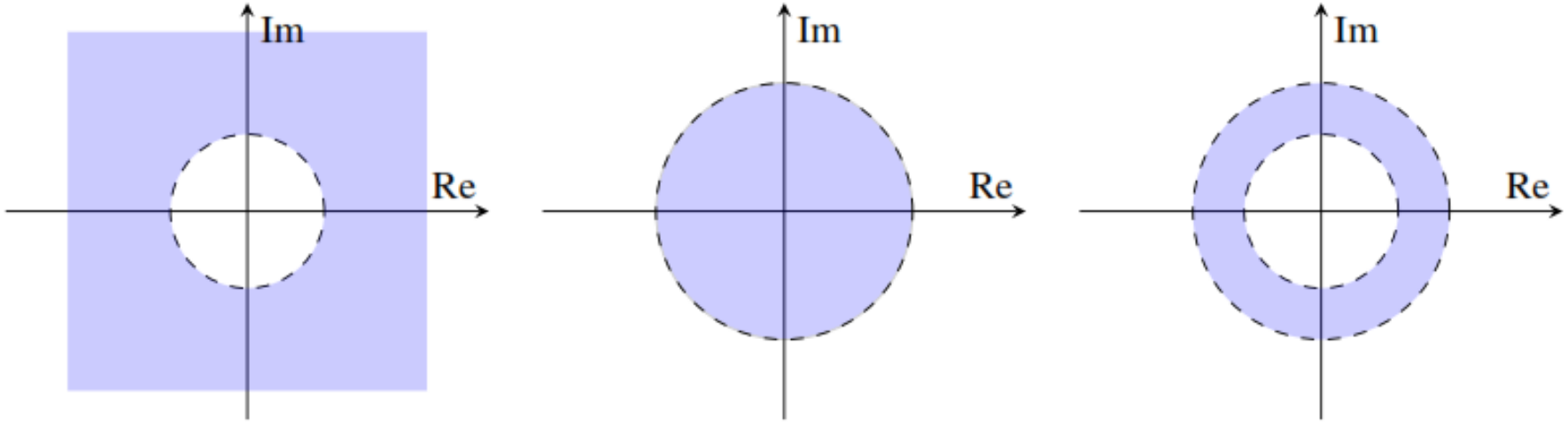

Valid Invalid Invalid

PROPERTY 5: LEFT SIDED SEQUENCES

- If a sequence x is ***left sided*** and the circle $|z| = r_0$ is in the ROC of $X = \mathcal{Z}x$, then all values of z for which $0 < |z| < r_0$ will also be in the ROC of X (i.e., the ROC contains a disk centered at 0, possibly excluding 0).
- Thus, if x is ***left sided but not right sided***, the ROC of X is a ***disk centered at*** 0, possibly excluding 0.
- Examples of sets that would be either valid or invalid as ROCs for X, if x is left sided but not right sided, are shown below.

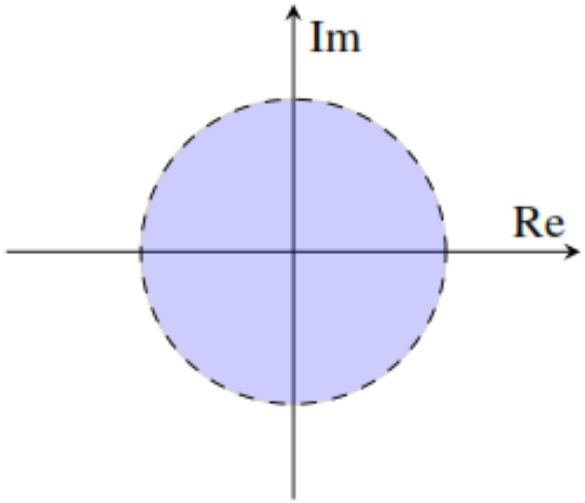

Valid

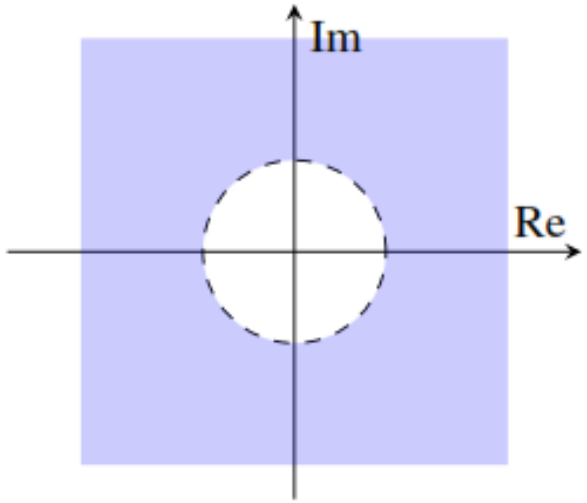

Invalid

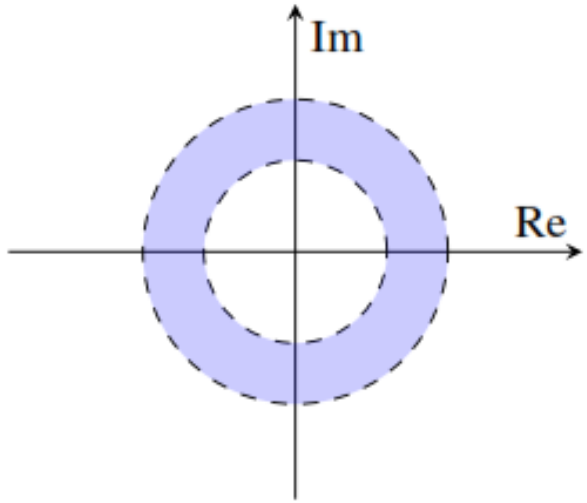

Invalid

PROPERTY 6: TWO SIDED SEQUENCES

- If a sequence x is ***two sided*** and the circle $|z| = r_0$ is in the ROC of $X = \mathcal{Z}x$, then the ROC of X will consist of a ring that contains this circle (i.e., the ROC is an ***annulus centered at*** 0).
- Examples of sets that would be either valid or invalid as ROCs for X, if x is two sided, are shown below.

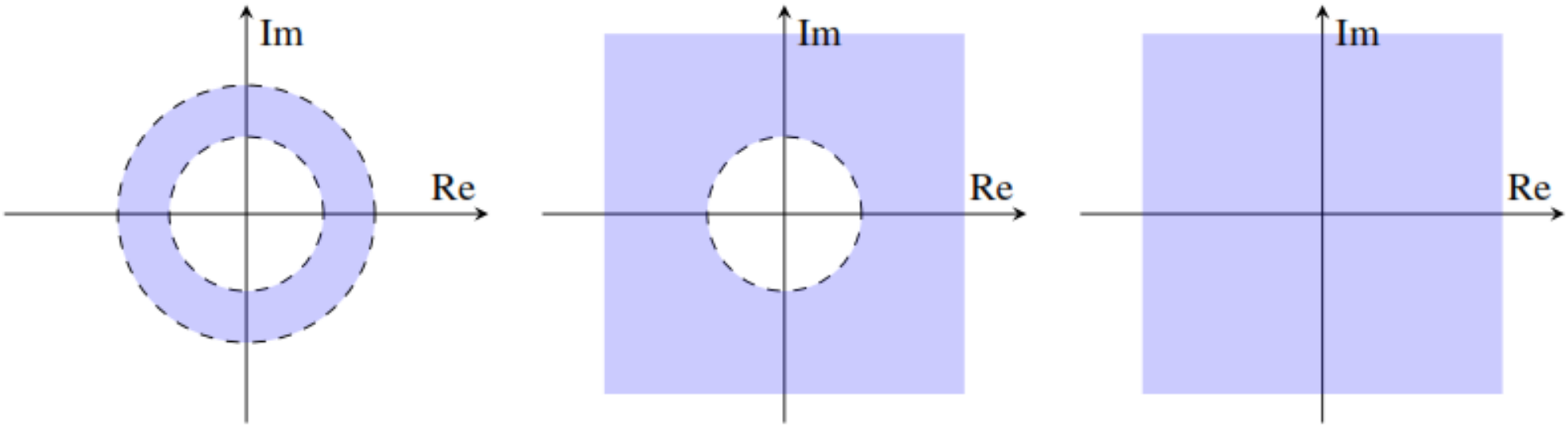

Valid Invalid Invalid

PROPERTY 7: MORE ON RATIONAL Z TRANSFORM

- If a sequence x has a ***rational*** z transform X (with at least one pole), then:
  1. If x is ***right sided***, then the ROC of X is the region outside the circle of radius equal to the largest magnitude of the poles of X (i.e., ***outside the outermost pole***), possibly including ∞.
  2. If x is ***left sided***, then the ROC of X is the region inside the circle of radius equal to the smallest magnitude of the nonzero poles of X and extending inward to, and possibly including, 0 (i.e., ***inside the innermost nonzero pole***).
- This property is implied by properties 1, 2, 4, and 5.
- Some examples of sets that would be either valid or invalid as ROCs for X, if X is rational and x is left/right sided, are given below.

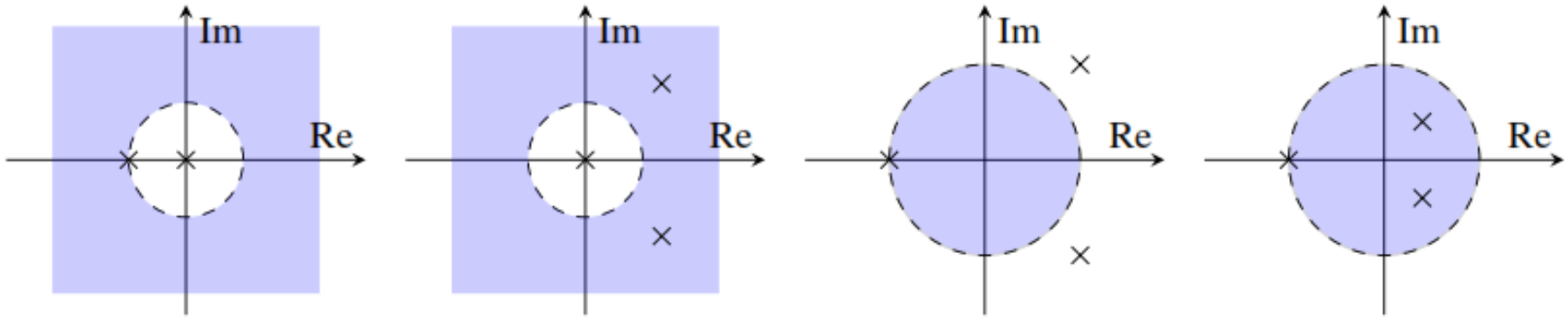

Valid Invalid Valid Invalid

GENERAL FORM OF THE ROC

- To summarize the results of properties 3, 4, 5, and 6, if the z transform X of the sequence x exists, the ROC of X depends on the left- and right-sidedness of x as follows:

x		ROC of X
left sided	right sided	
yes	yes	everywhere, except possibly 0 and/or ∞
no	yes	exterior of circle centered at 0, possibly including ∞
yes	no	disk centered at 0, possibly excluding 0
no	no	annulus centered at 0

- Thus, we can infer that, if X exists, the ROC can only be of one of the forms listed above.
- For example, the sets shown below would not be valid as ROCs.

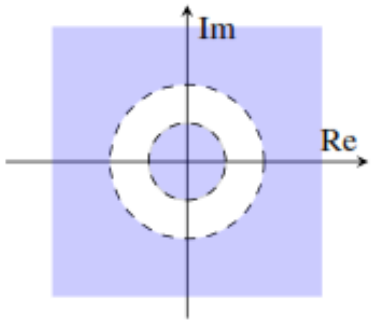

Invalid

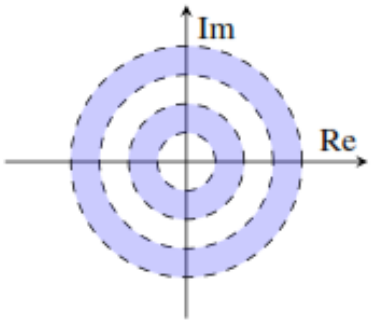

Invalid

Properties of the z Transform

PROPERTIES OF THE Z TRANSFORM

Property	Time Domain	Z Domain	ROC
Linearity	$a_1x_1(n)+a_2x_2(n)$	$a_1X_1(z)+a_2X_2(z)$	At least $R_1 \cap R_2$
Translation	$x(n-n_0)$	$z^{-n_0}X(z)$	R except possible addition/deletion of 0
Modulation	$a^n x(n)$	$X(a^{-1}z)$	$\lvert a\rvert R$
Conjugation	$x^*(n)$	$X^*(z^*)$	R
Time Reversal	$x(-n)$	$X(1/z)$	R^{-1}
Upsampling	$(\uparrow M)x(n)$	$X(z^M)$	$R^{1/M}$
Downsampling	$(\downarrow M)x(n)$	$\frac{1}{M}\sum_{k=0}^{M-1} X\left(e^{-j2\pi k/M} z^{1/M}\right)$	R^M
Convolution	$x_1 * x_2(n)$	$X_1(z)X_2(z)$	At least $R_1 \cap R_2$
Z-Domain Diff.	$nx(n)$	$-z\frac{d}{dz}X(z)$	R
Differencing	$x(n)-x(n-1)$	$(1-z^{-1})X(z)$	At least $R \cap \lvert z\rvert > 0$
Accumulation	$\sum_{k=-\infty}^{n} x(k)$	$\frac{z}{z-1}X(z)$	At least $R \cap \lvert z\rvert > 1$

Property	
Initial Value Theorem	$x(0) = \lim_{z\to\infty} X(z)$
Final Value Theorem	$\lim_{n\to\infty} x(n) = \lim_{z\to 1}[(z-1)X(z)]$

Z TRANSFORM PAIR

Pair	$x(n)$	$X(z)$	ROC
1	$\delta(n)$	1	All z
2	$u(n)$	$\frac{z}{z-1} = \frac{1}{1-z^{-1}}$	$\lvert z\rvert > 1$
3	$-u(-n-1)$	$\frac{z}{z-1} = \frac{1}{1-z^{-1}}$	$\lvert z\rvert < 1$
4	$nu(n)$	$\frac{z}{(z-1)^2} = \frac{z^{-1}}{(1-z^{-1})^2}$	$\lvert z\rvert > 1$
5	$-nu(-n-1)$	$\frac{z}{(z-1)^2} = \frac{z^{-1}}{(1-z^{-1})^2}$	$\lvert z\rvert < 1$
6	$a^n u(n)$	$\frac{z}{z-a} = \frac{1}{1-az^{-1}}$	$\lvert z\rvert > \lvert a\rvert$
7	$-a^n u(-n-1)$	$\frac{z}{z-a} = \frac{1}{1-az^{-1}}$	$\lvert z\rvert < \lvert a\rvert$
8	$na^n u(n)$	$\frac{az}{(z-a)^2} = \frac{az^{-1}}{(1-az^{-1})^2}$	$\lvert z\rvert > \lvert a\rvert$
9	$-na^n u(-n-1)$	$\frac{az}{(z-a)^2} = \frac{az^{-1}}{(1-az^{-1})^2}$	$\lvert z\rvert < \lvert a\rvert$
10	$\frac{(n+1)(n+2)\cdots(n+m-1)}{(m-1)!} a^n u(n)$	$\frac{z^m}{(z-a)^m} = \frac{1}{(1-az^{-1})^m}$	$\lvert z\rvert > \lvert a\rvert$
11	$-\frac{(n+1)(n+2)\cdots(n+m-1)}{(m-1)!} a^n u(-n-1)$	$\frac{z^m}{(z-a)^m} = \frac{1}{(1-az^{-1})^m}$	$\lvert z\rvert < \lvert a\rvert$

Z TRANSFORM PAIR

Pair	$x(n)$	$X(z)$	ROC
12	$\cos(\Omega_0 n)u(n)$	$\frac{z(z-\cos\Omega_0)}{z^2-2z\cos\Omega_0+1} = \frac{1-(\cos\Omega_0)z^{-1}}{1-(2\cos\Omega_0)z^{-1}+z^{-2}}$	$\lvert z\rvert > 1$
13	$-\cos(\Omega_0 n)u(-n-1)$	$\frac{z(z-\cos\Omega_0)}{z^2-2z\cos\Omega_0+1} = \frac{1-(\cos\Omega_0)z^{-1}}{1-(2\cos\Omega_0)z^{-1}+z^{-2}}$	$\lvert z\rvert < 1$
14	$\sin(\Omega_0 n)u(n)$	$\frac{z\sin\Omega_0}{z^2-2z\cos\Omega_0+1} = \frac{(\sin\Omega_0)z^{-1}}{1-(2\cos\Omega_0)z^{-1}+z^{-2}}$	$\lvert z\rvert > 1$
15	$-\sin(\Omega_0 n)u(-n-1)$	$\frac{z\sin\Omega_0}{z^2-2z\cos\Omega_0+1} = \frac{(\sin\Omega_0)z^{-1}}{1-(2\cos\Omega_0)z^{-1}+z^{-2}}$	$\lvert z\rvert < 1$
16	$a^n\cos(\Omega_0 n)u(n)$	$\frac{z(z-a\cos\Omega_0)}{z^2-2az\cos\Omega_0+a^2} = \frac{1-(a\cos\Omega_0)z^{-1}}{1-(2a\cos\Omega_0)z^{-1}+a^2z^{-2}}$	$\lvert z\rvert > \lvert a\rvert$
17	$a^n\sin(\Omega_0 n)u(n)$	$\frac{az\sin\Omega_0}{z^2-2az\cos\Omega_0+a^2} = \frac{(a\sin\Omega_0)z^{-1}}{1-(2a\cos\Omega_0)z^{-1}+a^2z^{-2}}$	$\lvert z\rvert > \lvert a\rvert$
18	$u(n)-u(n-M), M>0$	$\frac{z(1-z^{-M})}{z-1} = \frac{1-z^{-M}}{1-z^{-1}}$	$\lvert z\rvert > 0$
19	$a^{\lvert n\rvert}, \lvert a\rvert < 1$	$\frac{(a-a^{-1})z}{(z-a)(z-a^{-1})}$	$\lvert a\rvert < \lvert z\rvert < \lvert a^{-1}\rvert$

LINEARITY

- If $x_1(n) \overset{ZT}{\longleftrightarrow} X_1(z)$ with ROC R_1 and $x_2(n) \overset{ZT}{\longleftrightarrow} X_2(z)$ with ROC R_2, then

  $a_1 x_1(n) + a_2 x_2(n) \overset{ZT}{\longleftrightarrow} a_1 X_1(z) + a_2 X_2(z)$ with ROC R containing $R_1 \cap R_2$,

  where a_1 and a_2 are arbitrary complex constants.
- This is known as the **linearity property** of the z transform.
- The ROC always contains the intersection but could be larger (in the case that pole-zero cancellation occurs).

EXAMPLE

Find the z transform X of the sequence

$$x(n) = a^{|n|},$$

where a is a complex constant satisfying $|a| < 1$.

Solution. To begin, we observe that x can be written as $x = x_1 + x_2$, where

$$x_1(n) = a^{-n}u(-n-1) \quad \text{and} \quad x_2(n) = a^n u(n).$$

$$-a^n u(-n-1) \overset{\text{ZT}}{\longleftrightarrow} \frac{z}{z-a} \text{ for } |z| < |a| \quad \text{and} \quad a^n u(n) \overset{\text{ZT}}{\longleftrightarrow} \frac{z}{z-a} \text{ for } |z| > |a|.$$

Thus, we have

$$X_1(z) = -\frac{z}{z-a^{-1}} \text{ for } |z| < |a^{-1}| \quad \text{and} \quad X_2(z) = \frac{z}{z-a} \text{ for } |z| > |a|.$$

EXAMPLE

From the linearity property of the z transform, we have

$$\begin{aligned} X(z) &= X_1(z) + X_2(z) \\ &= -\frac{z}{z-a^{-1}} + \frac{z}{z-a} \\ &= \frac{z^2 - a^{-1}z - (z^2 - az)}{(z-a)(z-a^{-1})} \\ &= \frac{z^2 - a^{-1}z - z^2 + az}{(z-a)(z-a^{-1})} \\ &= \frac{(a-a^{-1})z}{(z-a)(z-a^{-1})}. \end{aligned}$$

Let R_1 and R_2 denote the ROCs of X_1 and X_2, respectively.

$$\begin{aligned} R_1 \cap R_2 &= \{|z| < |a^{-1}|\} \cap \{|z| > |a|\} \\ &= \{|a| < |z| < |a^{-1}|\}. \end{aligned}$$

TRANSLATING

- If $x(n) \overset{ZT}{\longleftrightarrow} X(z)$ with ROC R, then

$$x(n-n_0) \overset{ZT}{\longleftrightarrow} z^{-n_0}X(z) \text{ with ROC } R',$$

  where n_0 is an integer constant and R' is the same as R except for the possible addition or deletion of zero or infinity.

- This is known as the **translation (or time-shifting) property** of the z transform.

EXAMPLE

Find the z transform X of the sequence

$$x(n) = u(n - n_0),$$

where n_0 is an integer constant.

Solution.

we know that $u(n) \overset{ZT}{\longleftrightarrow} \frac{z}{z-1}$ for $|z| > 1$.

$$\begin{aligned} X(z) &= z^{-n_0} \mathcal{Z}u(z) \\ &= z^{-n_0} \frac{z}{z-1} \\ &= \frac{z^{1-n_0}}{z-1} \quad \text{for } |z| > 1. \end{aligned}$$

$$u(n - n_0) \overset{ZT}{\longleftrightarrow} \frac{z^{1-n_0}}{z-1} \quad \text{for } |z| > 1.$$

Z-DOMAIN SCALING

- If $x(n) \overset{\text{ZT}}{\longleftrightarrow} X(z)$ with ROC R, then

$$a^n x(n) \overset{\text{ZT}}{\longleftrightarrow} X(z/a) \quad \text{with ROC } |a|R,$$

  where a is a nonzero constant.
- This is known as the **z-domain scaling property** of the z transform.
- As illustrated below, the ROC R is ***scaled*** by $|a|$.

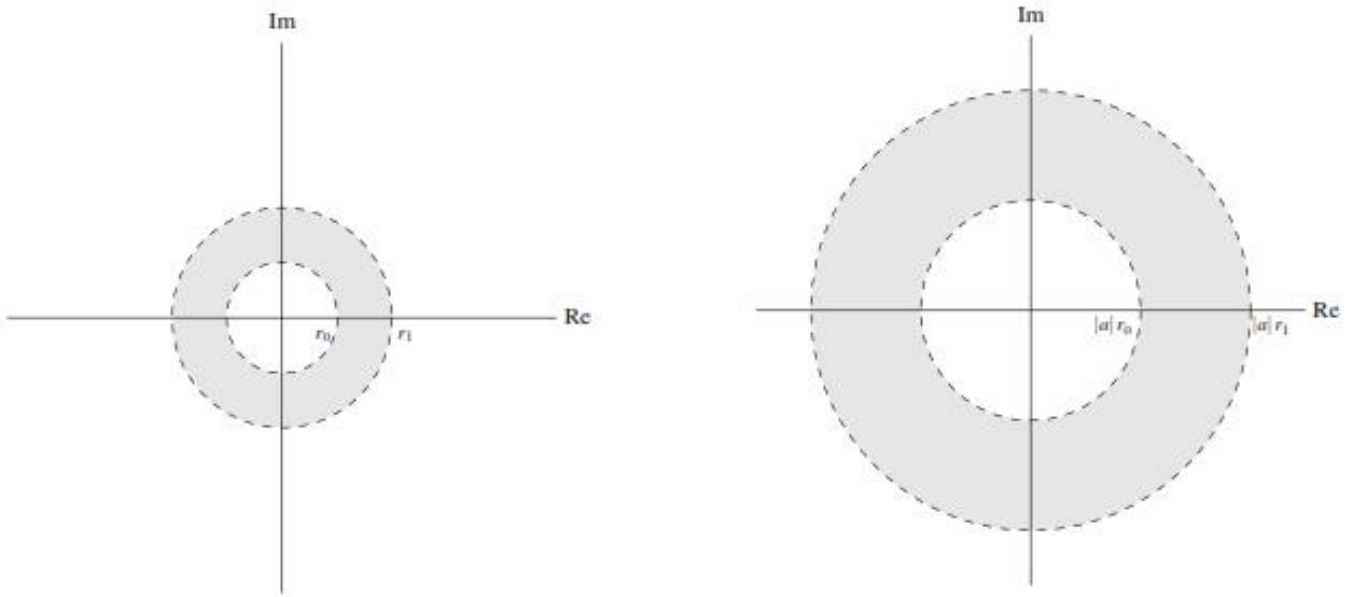

R $\qquad$ $|a|R$

EXAMPLE

Using properties of the z transform and the z transform pair

$$u(n) \overset{\text{ZT}}{\longleftrightarrow} \frac{z}{z-1} \text{ for } |z| > 1,$$

find the z transform X of the sequence

$$x(n) = a^n u(n).$$

EXAMPLE

Solution. Using the z-domain scaling property and the given z transform pair, we can write

$$\begin{aligned} X(z) &= \frac{z/a}{z/a-1} \\ &= \frac{z}{z-a}. \end{aligned}$$

For the ROC R_X of X, we have

$$|z/a| > 1 \Rightarrow |z|/|a| > 1 \Rightarrow |z| > |a|.$$

Thus, we have

$$a^n u(n) \overset{\text{ZT}}{\longleftrightarrow} \frac{z}{z-a} \quad \text{for } |z| > |a|.$$

TIME REVERSAL

- If $x(n) \overset{\text{ZT}}{\longleftrightarrow} X(z)$ with ROC R, then

$$x(-n) \overset{\text{ZT}}{\longleftrightarrow} X(1/z) \quad \text{with ROC } 1/R.$$

- This is known as the **time-reversal property** of the z transform.
- As illustrated below, the ROC R is ***reciprocated***.

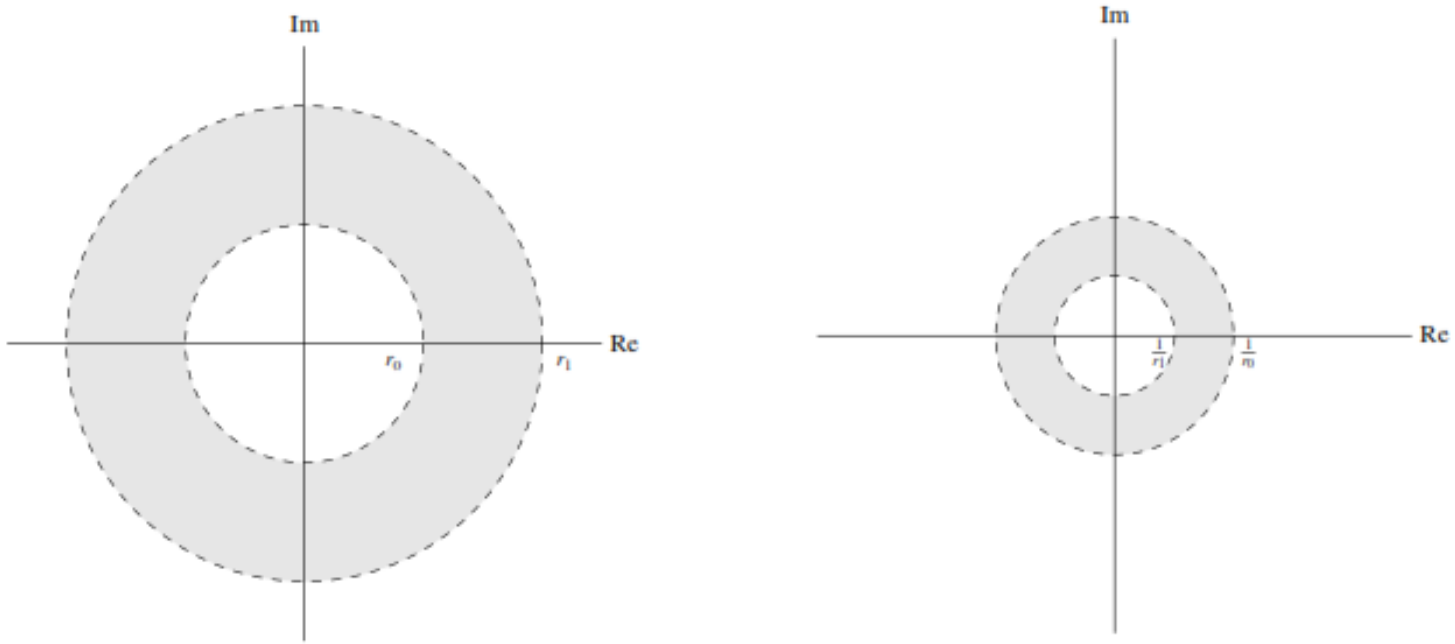

R $\qquad$ $1/R$

EXAMPLE

Using properties of the z transform and the z transform pair

$$u(n) \overset{\text{ZT}}{\longleftrightarrow} \frac{z}{z-1} \quad \text{for } |z| > 1,$$

find the z transform X of the sequence

$$x(n) = u(-n).$$

EXAMPLE

Solution. Using the given z transform pair and the time-reversal property of the z transform, we can write

$$X(z) = \frac{z^{-1}}{z^{-1} - 1} \quad \text{for } |z^{-1}| > 1.$$

Simplifying the algebraic expression, we obtain

$$X(z) = \frac{z^{-1}}{z^{-1} - 1} = \frac{1}{1 - z}.$$

Simplifying the expression for the ROC, we obtain

$$|z^{-1}| > 1 \Rightarrow |z| < 1.$$

Thus, we have

$$X(z) = \frac{1}{1 - z} \quad \text{for } |z| < 1.$$

UPSAMPLING

- Define $(\uparrow M)x(n)$ as

$$(\uparrow M)x(n) = \begin{cases} x(n/M) & n/M \text{ is an integer} \\ 0 & \text{otherwise.} \end{cases}$$

- If $x(n) \xleftrightarrow{\text{ZT}} X(z)$ with ROC R, then

$$(\uparrow M)x(n) \xleftrightarrow{\text{ZT}} X(z^M) \quad \text{with ROC } R^{1/M}.$$

- This is known as the **upsampling (or time-expansion) property** of the z transform.

EXAMPLE

Find the z transform X of the sequence

$$x(n) = \begin{cases} 1 & n \geq 0 \text{ and } n \text{ even} \\ 0 & \text{otherwise.} \end{cases}$$

Solution. To begin, we observe that $x = (\uparrow 2)u$.

$$u(n) \overset{\text{ZT}}{\longleftrightarrow} \tfrac{z}{z-1} \text{ for } |z| > 1.$$

Using the upsampling property of the z transform, we have

$$\begin{aligned} X(z) &= \mathcal{Z}u(z^2) \\ &= \frac{z^2}{z^2 - 1}. \end{aligned}$$

Since $R^{1/2} = R$, the ROC of X is R.

$$(\uparrow 2)u(n) \overset{\text{ZT}}{\longleftrightarrow} \frac{z^2}{z^2 - 1} \text{ for } |z| > 1.$$

DOWNSAMPLING

- If $x(n) \xleftrightarrow{\text{ZT}} X(z)$ with ROC R, then

$$(\downarrow M)x(n) \xleftrightarrow{\text{ZT}} \frac{1}{M}\sum_{k=0}^{M-1} X\left(e^{-j2\pi k/M} z^{1/M}\right) \quad \text{with ROC } R^M.$$

- This is known as the **downsampling property** of the z transform.

CONJUGATION

- If $x(n) \xleftrightarrow{ZT} X(z)$ with ROC R, then

$$x^*(n) \xleftrightarrow{ZT} X^*(z^*) \quad \text{with ROC } R.$$

- This is known as the **conjugation property** of the z transform.

CONVOLUTION

- If $x_1(n) \xleftrightarrow{ZT} X_1(z)$ with ROC R_1 and $x_2(n) \xleftrightarrow{ZT} X_2(z)$ with ROC R_2, then

$$x_1 * x_2(n) \xleftrightarrow{ZT} X_1(z)X_2(z) \quad \text{with ROC containing } R_1 \cap R_2.$$

- This is known that the **convolution (or time-domain convolution) property** of the z transform.
- The ROC always contains the intersection but can be larger than the intersection (if pole-zero cancellation occurs).
- Convolution in the time domain becomes ***multiplication*** in the z domain.
- This can make dealing with LTI systems much easier in the z domain than in the time domain.

Z-DOMAIN DIFFERENTIATION

- If $x(n) \xleftrightarrow{ZT} X(z)$ with ROC R, then

$$nx(n) \xleftrightarrow{ZT} -z\frac{d}{dz}X(z) \quad \text{with ROC } R.$$

- This is known as the **z-domain differentiation property** of the z transform.

DIFFERENCING

- If $x(n) \overset{ZT}{\longleftrightarrow} X(z)$ with ROC R, then

$$x(n) - x(n-1) \overset{ZT}{\longleftrightarrow} (1 - z^{-1})X(z) \text{ for ROC containing } R \cap |z| > 0.$$

- This is known as the **differencing property** of the z transform.
- Differencing in the time domain becomes multiplication by $1 - z^{-1}$ in the z domain.
- This can make dealing with difference equations much easier in the z domain than in the time domain.

ACCUMULATION

- If $x(n) \xleftrightarrow{ZT} X(z)$ with ROC R, then

$$\sum_{k=-\infty}^{n} x(k) \xleftrightarrow{ZT} \frac{z}{z-1} X(z) \text{ for ROC containing } R \cap |z| > 1.$$

- This is known as the **accumulation property** of the z transform.

INITIAL VALUE THEOREM

- For a sequence x with z transform X, if x is causal, then

$$x(0) = \lim_{z \to \infty} X(z).$$

- This result is known as the **initial-value theorem**.

FINAL VALUE THEOREM

- For a sequence x with z transform X, if x is causal and $\lim_{n\to\infty} x(n)$ exists, then

$$\lim_{n\to\infty} x(n) = \lim_{z\to 1}[(z-1)X(z)].$$

- This result is known as the **final-value theorem**.

Determination of Inverse z Transform

FINDING THE INVERSE Z TRANSFORM

- Recall that the inverse z transform x of X is given by

$$x(n) = \frac{1}{2\pi j} \oint_{\Gamma} X(z) z^{n-1} dz,$$

  where Γ is a counterclockwise closed circular contour centered at the origin and with radius r such that Γ is in the ROC of X.
- Unfortunately, the above contour integration can often be ***quite tedious*** to compute.
- Consequently, we do not usually compute the inverse z transform directly using the above equation.
- For rational functions, the inverse z transform can be more easily computed using ***partial fraction expansions***.
- Using a partial fraction expansion, we can express a rational function as a sum of lower-order rational functions whose inverse z transforms can typically be found in tables.

EXAMPLE

Find the inverse z transform x of the function

$$X(z) = \frac{1}{\left(z+\frac{1}{2}\right)\left(z-\frac{1}{2}\right)} = \frac{z^{-2}}{\left(1+\frac{1}{2}z^{-1}\right)\left(1-\frac{1}{2}z^{-1}\right)} \quad \text{for } |z| > \frac{1}{2}.$$

EXAMPLE

Solution.

FIRST APPROACH (USING PARTIAL FRACTION EXPANSION IN THE VARIABLE z).

we use $X(z)$ expressed in terms of only positive powers of z:

$$X(z) = \frac{1}{\left(z+\frac{1}{2}\right)\left(z-\frac{1}{2}\right)}.$$

We find a partial fraction expansion of

$$\frac{X(z)}{z} = \frac{1}{z\left(z+\frac{1}{2}\right)\left(z-\frac{1}{2}\right)}.$$

(Note that $X(z)/z$ is strictly proper.) This expression has an expansion of the form

$$\frac{X(z)}{z} = \frac{A_1}{z} + \frac{A_2}{z+\frac{1}{2}} + \frac{A_3}{z-\frac{1}{2}}.$$

EXAMPLE

Calculating the expansion coefficients, we obtain

$$A_1 = \left[z\left(\frac{X(z)}{z}\right)\right]\Bigg|_{z=0} = \frac{1}{\left(z+\frac{1}{2}\right)\left(z-\frac{1}{2}\right)}\Bigg|_{z=0} = \frac{1}{\left(\frac{1}{2}\right)\left(-\frac{1}{2}\right)} = \frac{1}{\left(-\frac{1}{4}\right)} = -4,$$

$$A_2 = \left[\left(z+\frac{1}{2}\right)\left(\frac{X(z)}{z}\right)\right]\Bigg|_{z=-1/2} = \frac{1}{z\left(z-\frac{1}{2}\right)}\Bigg|_{z=-1/2} = \frac{1}{\left(-\frac{1}{2}\right)(-1)} = \frac{1}{\left(\frac{1}{2}\right)} = 2,$$

$$A_3 = \left[\left(z-\frac{1}{2}\right)\left(\frac{X(z)}{z}\right)\right]\Bigg|_{z=1/2} = \frac{1}{z\left(z+\frac{1}{2}\right)}\Bigg|_{z=1/2} = \frac{1}{\left(\frac{1}{2}\right)(1)} = \frac{1}{\left(\frac{1}{2}\right)} = 2.$$

Thus, we have

$$\frac{X(z)}{z} = -4\left(\frac{1}{z}\right) + 2\left(\frac{1}{z+\frac{1}{2}}\right) + 2\left(\frac{1}{z-\frac{1}{2}}\right).$$

So, we can rewrite X as

$$X(z) = -4 + 2\left(\frac{z}{z+\frac{1}{2}}\right) + 2\left(\frac{z}{z-\frac{1}{2}}\right).$$

EXAMPLE

Taking the inverse z transform, we have

$$x(n) = -4\mathcal{Z}^{-1}\{1\}(n) + 2\mathcal{Z}^{-1}\left\{\frac{z}{z+\frac{1}{2}}\right\}(n) + 2\mathcal{Z}^{-1}\left\{\frac{z}{z-\frac{1}{2}}\right\}(n).$$

Since X converges for $|z| > \frac{1}{2}$, we have

$$\left(-\tfrac{1}{2}\right)^n u(n) \overset{\text{ZT}}{\longleftrightarrow} \frac{z}{z+\frac{1}{2}} \text{ for } |z| > \tfrac{1}{2} \quad \text{and} \quad \left(\tfrac{1}{2}\right)^n u(n) \overset{\text{ZT}}{\longleftrightarrow} \frac{z}{z-\frac{1}{2}} \text{ for } |z| > \tfrac{1}{2}.$$

Thus, we have

$$\begin{aligned} x(n) &= -4\delta(n) + 2\left[\left(-\tfrac{1}{2}\right)^n u(n)\right] + 2\left[\left(\tfrac{1}{2}\right)^n u(n)\right] \\ &= -4\delta(n) + 2\left(-\tfrac{1}{2}\right)^n u(n) + 2\left(\tfrac{1}{2}\right)^n u(n). \end{aligned}$$

EXAMPLE

SECOND APPROACH (USING PARTIAL FRACTION EXPANSION IN THE VARIABLE z^{-1}).

$$X(z) = \frac{z^{-2}}{\left(1+\frac{1}{2}z^{-1}\right)\left(1-\frac{1}{2}z^{-1}\right)}.$$

$$\begin{aligned} X(z) &= \frac{z^{-2}+4\left(1-\frac{1}{4}z^{-2}\right)-4\left(1-\frac{1}{4}z^{-2}\right)}{\left(1+\frac{1}{2}z^{-1}\right)\left(1-\frac{1}{2}z^{-1}\right)} \\ &= -4+\frac{z^{-2}+4-z^{-2}}{\left(1+\frac{1}{2}z^{-1}\right)\left(1-\frac{1}{2}z^{-1}\right)} \\ &= -4+\frac{4}{\left(1+\frac{1}{2}z^{-1}\right)\left(1-\frac{1}{2}z^{-1}\right)}. \end{aligned}$$

Let $V(z) = \frac{4}{\left(1+\frac{1}{2}z^{-1}\right)\left(1-\frac{1}{2}z^{-1}\right)}$ so that $X(z) = -4+V(z)$.

$$V(z) = \frac{A_1}{1+\frac{1}{2}z^{-1}} + \frac{A_2}{1-\frac{1}{2}z^{-1}}.$$

EXAMPLE

Calculating the expansion coefficients, we obtain

$$A_1 = \left(1+\tfrac{1}{2}z^{-1}\right)V(z)\big|_{z=-1/2} = \left.\frac{4}{1-\frac{1}{2}z^{-1}}\right|_{z=-1/2} = \frac{4}{1-\left(\frac{1}{2}\right)(-2)} = 2 \quad \text{and}$$

$$A_2 = \left(1-\tfrac{1}{2}z^{-1}\right)V(z)\big|_{z=1/2} = \left.\frac{4}{1+\frac{1}{2}z^{-1}}\right|_{z=1/2} = \frac{4}{1+\left(\frac{1}{2}\right)(2)} = 2.$$

Thus, we have

$$V(z) = 2\left(\frac{1}{1+\frac{1}{2}z^{-1}}\right) + 2\left(\frac{1}{1-\frac{1}{2}z^{-1}}\right).$$

So, we can rewrite X as

$$X(z) = -4 + 2\left(\frac{1}{1+\frac{1}{2}z^{-1}}\right) + 2\left(\frac{1}{1-\frac{1}{2}z^{-1}}\right).$$

EXAMPLE

Taking the inverse z transform, we have

$$x(n) = -4\mathcal{Z}^{-1}\{1\}(n) + 2\mathcal{Z}^{-1}\left\{\frac{1}{1+\frac{1}{2}z^{-1}}\right\}(n) + 2\mathcal{Z}^{-1}\left\{\frac{1}{1-\frac{1}{2}z^{-1}}\right\}(n).$$

Since X converges for $|z| > \frac{1}{2}$, we have

$$\left(-\tfrac{1}{2}\right)^n u(n) \overset{\text{ZT}}{\longleftrightarrow} \frac{1}{1+\frac{1}{2}z^{-1}} \text{ for } |z| > \tfrac{1}{2} \quad \text{and} \quad \left(\tfrac{1}{2}\right)^n u(n) \overset{\text{ZT}}{\longleftrightarrow} \frac{1}{1-\frac{1}{2}z^{-1}} \text{ for } |z| > \tfrac{1}{2}.$$

Thus, we have

$$\begin{aligned} x(n) &= -4\delta(n) + 2\left[\left(-\tfrac{1}{2}\right)^n u(n)\right] + 2\left[\left(\tfrac{1}{2}\right)^n u(n)\right] \\ &= -4\delta(n) + 2\left(-\tfrac{1}{2}\right)^n u(n) + 2\left(\tfrac{1}{2}\right)^n u(n). \end{aligned}$$

EXAMPLE

Find the inverse z transform x of the function

$$X(z) = \frac{z(z-1)}{\left(z-\frac{1}{3}\right)\left(z-\frac{1}{5}\right)} \quad \text{for } |z| > \frac{1}{3}.$$

EXAMPLE

Solution.

This expansion has the form

$$\frac{X(z)}{z} = \frac{A_1}{z-\frac{1}{3}} + \frac{A_2}{z-\frac{1}{5}}.$$

Calculating the expansion coefficients, we obtain

$$A_1 = \left[\left(z-\tfrac{1}{3}\right)\left(\frac{X(z)}{z}\right)\right]\Bigg|_{z=1/3} = \frac{z-1}{z-\frac{1}{5}}\Bigg|_{z=1/3} = \frac{\left(-\frac{2}{3}\right)}{\left(\frac{2}{15}\right)} = \left(\frac{-2}{3}\right)\left(\frac{15}{2}\right) = -5 \quad \text{and}$$

$$A_2 = \left[\left(z-\tfrac{1}{5}\right)\left(\frac{X(z)}{z}\right)\right]\Bigg|_{z=1/5} = \frac{z-1}{z-\frac{1}{3}}\Bigg|_{z=1/5} = \frac{\left(-\frac{4}{5}\right)}{\left(-\frac{2}{15}\right)} = \left(\frac{-4}{5}\right)\left(\frac{-15}{2}\right) = 6.$$

Thus, we have

$$\frac{X(z)}{z} = \frac{-5}{z-\frac{1}{3}} + \frac{6}{z-\frac{1}{5}}.$$

EXAMPLE

So, we can rewrite X as

$$X(z) = \frac{-5z}{z-\frac{1}{3}} + \frac{6z}{z-\frac{1}{5}}.$$

Taking the inverse z transform, we have

$$x(n) = -5\mathcal{Z}^{-1}\left\{\frac{z}{z-\frac{1}{3}}\right\}(n) + 6\mathcal{Z}^{-1}\left\{\frac{z}{z-\frac{1}{5}}\right\}(n).$$

Since X converges for $|z| > \frac{1}{3}$, we have

$$\left(\tfrac{1}{3}\right)^n u(n) \xleftrightarrow{\text{ZT}} \frac{z}{z-\frac{1}{3}} \text{ for } |z| > \tfrac{1}{3} \quad \text{and} \quad \left(\tfrac{1}{5}\right)^n u(n) \xleftrightarrow{\text{ZT}} \frac{z}{z-\frac{1}{5}} \text{ for } |z| > \tfrac{1}{5}.$$

Thus, we have

$$\begin{aligned} x(n) &= -5\left[\left(\tfrac{1}{3}\right)^n u(n)\right] + 6\left[\left(\tfrac{1}{5}\right)^n u(n)\right] \\ &= \left[-5\left(\tfrac{1}{3}\right)^n + 6\left(\tfrac{1}{5}\right)^n\right] u(n). \end{aligned}$$

EXAMPLE

Find the inverse z transform x of the function

$$X(z) = \frac{z^2(z-1)}{\left(z-\frac{1}{4}\right)\left(z-\frac{1}{2}\right)^2} \quad \text{for } z \in R,$$

for each R given below.

(a) $R = \left\{|z| < \frac{1}{4}\right\}$;

(b) $R = \left\{\frac{1}{4} < |z| < \frac{1}{2}\right\}$; and

(c) $R = \left\{|z| > \frac{1}{2}\right\}$.

EXAMPLE

Solution.

$$\frac{X(z)}{z} = \frac{z(z-1)}{\left(z-\frac{1}{4}\right)\left(z-\frac{1}{2}\right)^2}.$$

This expansion has the form

$$\frac{X(z)}{z} = \frac{A_1}{z-\frac{1}{4}} + \frac{A_{2,1}}{z-\frac{1}{2}} + \frac{A_{2,2}}{\left(z-\frac{1}{2}\right)^2}.$$

$$A_1 = \left(z-\tfrac{1}{4}\right)\left(\frac{X(z)}{z}\right)\Bigg|_{z=1/4} = \frac{z(z-1)}{\left(z-\frac{1}{2}\right)^2}\Bigg|_{z=1/4} = \frac{\left(\frac{1}{4}\right)\left(\frac{-3}{4}\right)}{\left(-\frac{1}{4}\right)^2} = \frac{\left(\frac{-3}{16}\right)}{\left(\frac{1}{16}\right)} = -3,$$

$$A_{2,1} = \frac{1}{(2-1)!}\left[\left(\frac{d}{dz}\right)^{2-1}\left[\left(z-\tfrac{1}{2}\right)^2\left(\frac{X(z)}{z}\right)\right]\right]\Bigg|_{z=1/2} = \frac{1}{1!}\left[\left(\frac{d}{dz}\right)\left[\left(z-\tfrac{1}{2}\right)^2\left(\frac{X(z)}{z}\right)\right]\right]\Bigg|_{z=1/2}$$

$$= \frac{1}{1!}\left[\left(\frac{d}{dz}\right)\left[\frac{z(z-1)}{z-\frac{1}{4}}\right]\right]\Bigg|_{z=1/2} = \left[\left(\frac{d}{dz}\right)\left[\left(z^2-z\right)\left(z-\tfrac{1}{4}\right)^{-1}\right]\right]\Bigg|_{z=1/2}$$

$$= \left[(2z-1)\left(z-\tfrac{1}{4}\right)^{-1} + (-1)\left(z-\tfrac{1}{4}\right)^{-2}\left(z^2-z\right)\right]\Bigg|_{z=1/2} = (-1)\left(\tfrac{1}{4}\right)^{-2}\left(-\tfrac{1}{4}\right) = \left(\tfrac{1}{4}\right)(16) = 4,$$

EXAMPLE

$$A_{2,2} = \frac{1}{(2-2)!}\left[\left(\frac{d}{dz}\right)^{2-2}\left[\left(z-\tfrac{1}{2}\right)^2\left(\frac{X(z)}{z}\right)\right]\right]\Bigg|_{z=1/2} = \frac{1}{0!}\left[\left[\left(z-\tfrac{1}{2}\right)^2\left(\frac{X(z)}{z}\right)\right]\right]\Bigg|_{z=1/2}$$

$$= \frac{1}{1!}\left[\left(\frac{d}{dz}\right)\left[\frac{z(z-1)}{z-\frac{1}{4}}\right]\right]\Bigg|_{z=1/2} = \frac{\left(\frac{1}{2}\right)\left(\frac{-1}{2}\right)}{\left(-\frac{1}{4}\right)} = \frac{\left(\frac{-1}{4}\right)}{\left(\frac{-1}{4}\right)}$$

$$= 1$$

Thus, we have

$$\frac{X(z)}{z} = -\frac{3}{z-\frac{1}{4}} + \frac{4}{z-\frac{1}{2}} + \frac{1}{\left(z-\frac{1}{2}\right)^2}.$$

So, we can rewrite X as

$$X(z) = -\frac{3z}{z-\frac{1}{4}} + \frac{4z}{z-\frac{1}{2}} + \frac{z}{\left(z-\frac{1}{2}\right)^2}.$$

Taking the inverse z transform, we have

$$x(n) = -3\mathcal{Z}^{-1}\left\{\frac{z}{z-\frac{1}{4}}\right\}(n) + 4\mathcal{Z}^{-1}\left\{\frac{z}{z-\frac{1}{2}}\right\}(n) + \mathcal{Z}^{-1}\left\{\frac{z}{\left(z-\frac{1}{2}\right)^2}\right\}(n).$$

EXAMPLE

(a) Suppose that $R = \left\{|z| < \frac{1}{4}\right\}$. In this case, we have

$$-\left(\tfrac{1}{4}\right)^n u(-n-1) \overset{\text{ZT}}{\longleftrightarrow} \frac{z}{z-\frac{1}{4}} \quad \text{for } |z| < \tfrac{1}{4},$$

$$-n\left(\tfrac{1}{2}\right)^n u(-n-1) \overset{\text{ZT}}{\longleftrightarrow} \frac{z}{z-\frac{1}{2}} \quad \text{for } |z| < \tfrac{1}{2}, \quad \text{and}$$

$$-\left(\tfrac{1}{2}\right)^n u(-n-1) \overset{\text{ZT}}{\longleftrightarrow} \frac{z}{\left(z-\frac{1}{2}\right)^2} \quad \text{for } |z| < \tfrac{1}{2}.$$

Thus, we have

$$\begin{aligned} x(n) &= -3\left[-\left(\tfrac{1}{4}\right)^n u(-n-1)\right] + 4\left[-\left(\tfrac{1}{2}\right)^n u(-n-1)\right] + \left[-n\left(\tfrac{1}{2}\right)^n u(-n-1)\right] \\ &= \left[3\left(\tfrac{1}{4}\right)^n - 4\left(\tfrac{1}{2}\right)^n - n\left(\tfrac{1}{2}\right)^n\right] u(-n-1). \end{aligned}$$

EXAMPLE

(b) Suppose that $R = \left\{\frac{1}{4} < |z| < \frac{1}{2}\right\}$. In this case, we have

$$\left(\tfrac{1}{4}\right)^n u(n) \overset{\text{ZT}}{\longleftrightarrow} \frac{z}{z-\frac{1}{4}} \quad \text{for } |z| > \tfrac{1}{4},$$

$$-n\left(\tfrac{1}{2}\right)^n u(-n-1) \overset{\text{ZT}}{\longleftrightarrow} \frac{z}{z-\frac{1}{2}} \quad \text{for } |z| < \tfrac{1}{2}, \quad \text{and}$$

$$-\left(\tfrac{1}{2}\right)^n u(-n-1) \overset{\text{ZT}}{\longleftrightarrow} \frac{z}{\left(z-\frac{1}{2}\right)^2} \quad \text{for } |z| < \tfrac{1}{2}.$$

Thus, we have

$$\begin{aligned} x(n) &= -3\left[\left(\tfrac{1}{4}\right)^n u(n)\right] + 4\left[-\left(\tfrac{1}{2}\right)^n u(-n-1)\right] + \left[-n\left(\tfrac{1}{2}\right)^n u(-n-1)\right] \\ &= \left[-3\left(\tfrac{1}{4}\right)^n\right] u(n) + \left[-4\left(\tfrac{1}{2}\right)^n - n\left(\tfrac{1}{2}\right)^n\right] u(-n-1). \end{aligned}$$

EXAMPLE

(c) Suppose that $R = \left\{|z| > \frac{1}{2}\right\}$. In this case, we have

$$\left(\tfrac{1}{4}\right)^n u(n) \overset{\text{ZT}}{\longleftrightarrow} \frac{z}{z-\frac{1}{4}} \quad \text{for } |z| > \tfrac{1}{4},$$

$$n\left(\tfrac{1}{2}\right)^n u(n) \overset{\text{ZT}}{\longleftrightarrow} \frac{z}{z-\frac{1}{2}} \quad \text{for } |z| > \tfrac{1}{2}, \quad \text{and}$$

$$\left(\tfrac{1}{2}\right)^n u(n) \overset{\text{ZT}}{\longleftrightarrow} \frac{z}{\left(z-\frac{1}{2}\right)^2} \quad \text{for } |z| > \tfrac{1}{2}.$$

Thus, we have

$$\begin{aligned} x(n) &= -3\left[\left(\tfrac{1}{4}\right)^n u(n)\right] + 4\left[\left(\tfrac{1}{2}\right)^n u(n)\right] + \left[n\left(\tfrac{1}{2}\right)^n u(n)\right] \\ &= \left[-3\left(\tfrac{1}{4}\right)^n + 4\left(\tfrac{1}{2}\right)^n + n\left(\tfrac{1}{2}\right)^n\right] u(n). \end{aligned}$$

z Transform and LTI Systems

SYSTEM FUNCTION OF LTI SYSTEMS

- Consider a LTI system with input x, output y, and impulse response h, and let X, Y, and H denote the z transforms of x, y, and h, respectively.
- Since $y(n) = x * h(n)$, the system is characterized in the z domain by

$$Y(z) = X(z)H(z).$$

- As a matter of terminology, we refer to H as the **system function** (or **transfer function**) of the system (i.e., the system function is the z transform of the impulse response).
- When viewed in the z domain, a LTI system forms its output by multiplying its input with its system function.
- A LTI system is completely characterized by its system function H.
- If the ROC of H includes the unit circle $|z| = 1$, then $H(e^{j\Omega})$ is the ***frequency response*** of the LTI system.

BLOCK DIAGRAM REPRESENTATION OF LTI SYSTEMS

- Consider a LTI system with input x, output y, and impulse response h, and let X, Y, and H denote the z transforms of x, y, and h, respectively.
- Often, it is convenient to represent such a system in block diagram form in the z domain as shown below.

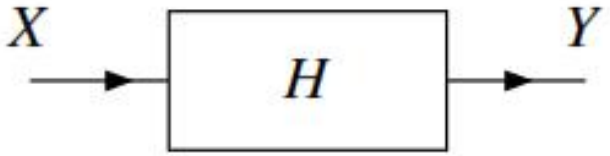

- Since a LTI system is completely characterized by its system function, we typically label the system with this quantity.

INTERCONNECTION OF LTI SYSTEMS

- The ***series*** interconnection of the LTI systems with system functions H_1 and H_2 is the LTI system with system function $H = H_1 H_2$. That is, we have the equivalences shown below.

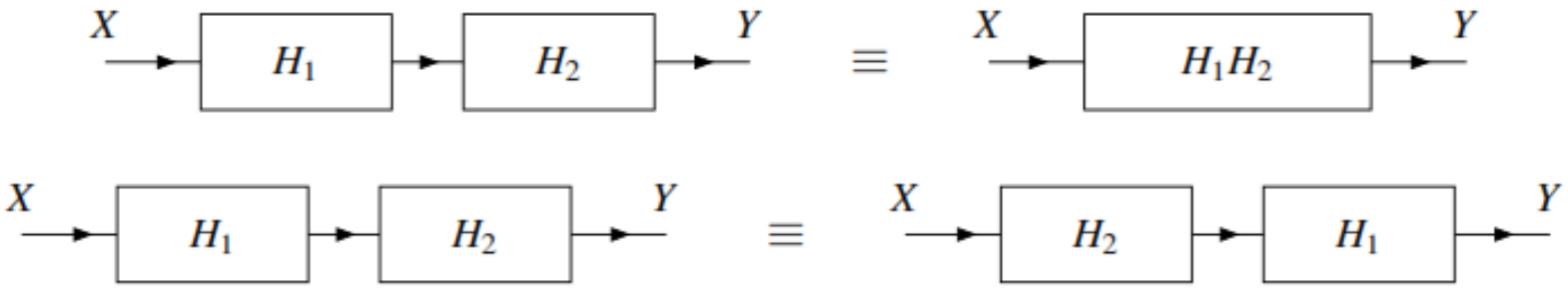

- The ***parallel*** interconnection of the LTI systems with impulse responses H_1 and H_2 is a LTI system with the system function $H = H_1 + H_2$. That is we have the equivalence shown below.

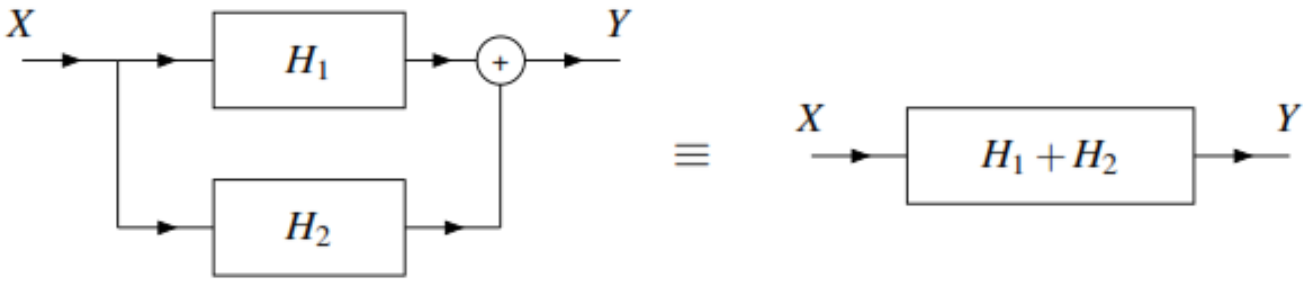

CAUSALITY

- If a LTI system is ***causal***, its impulse response is causal, and therefore ***right sided***. From this, we have the result below.
- **Theorem.** A LTI system is ***causal*** if and only if the ROC of the system function is:
  1. the ***exterior of a circle, including*** ∞; or
  2. the ***entire complex plane, including*** ∞ and possibly excluding 0.
- **Theorem.** A LTI system with a ***rational*** system function H is causal if and only if:
  1. the ROC of H is the exterior of a (possibly degenerate) circle ***outside the outermost pole*** of H or, if H has no poles, the entire complex plane; and
  2. H is ***proper*** (i.e., when $H(z)$ is expressed as a ratio of polynomials in z, the order of the numerator polynomial does not exceed the order of the denominator polynomial).

BIBO STABILITY

- Whether or not a system is BIBO stable depends on the ROC of its system function.
- **Theorem.** A LTI system is ***BIBO stable*** if and only if the ROC of its system function contains the ***unit circle*** (i.e., $|z| = 1$).
- **Theorem.** A ***causal*** LTI system with a ***rational*** system function H is BIBO stable if and only if all of the poles of H lie inside the unit circle (i.e., each of the poles has a ***magnitude less than one***).

INVERTIBILITY

- A LTI system $\mathcal{H}$ with system function H is invertible if and only if there exists another LTI system with system function H_{inv} such that

$$H(z)H_{\text{inv}}(z) = 1,$$

in which case H_{inv} is the system function of $\mathcal{H}^{-1}$ and

$$H_{\text{inv}}(z) = \frac{1}{H(z)}.$$

- Since distinct systems can have identical system functions (but with differing ROCs), the inverse of a LTI system is ***not necessarily unique***.
- In practice, however, we often desire a stable and/or causal system. So, although multiple inverse systems may exist, we are frequently only interested in ***one specific choice*** of inverse system (due to these additional constraints of stability and/or causality).

LTI SYSTEMS AND DIFFERENCE EQUATIONS

- Many LTI systems of practical interest can be represented using an ***Nth-order linear difference equation with constant coefficients***.
- Consider a system with input x and output y that is characterized by an equation of the form

$$\sum_{k=0}^{N} b_k y(n-k) = \sum_{k=0}^{M} a_k x(n-k) \quad \text{where} \quad M \leq N.$$

- Let h denote the impulse response of the system, and let X, Y, and H denote the z transforms of x, y, and h, respectively.
- One can show that $H(z)$ is given by

$$H(z) = \frac{Y(z)}{X(z)} = \frac{\sum_{k=0}^{M} a_k z^{-k}}{\sum_{k=0}^{N} b_k z^{-k}}.$$

- Observe that, for a system of the form considered above, the system function is always ***rational***.

Application: Analysis of Control Systems

FEEDBACK CONTROL SYSTEMS

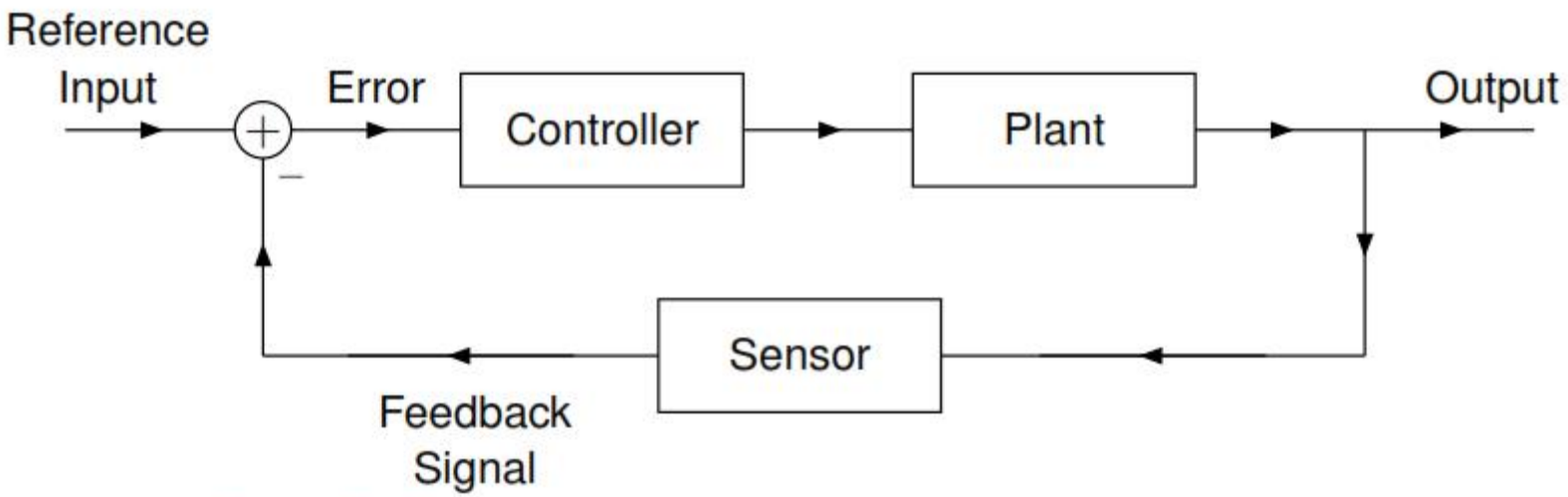

- **input**: ***desired value*** of the quantity to be controlled
- **output**: ***actual value*** of the quantity to be controlled
- **error**: ***difference*** between the desired and actual values
- **plant**: system to be controlled
- **sensor**: device used to measure the actual output
- **controller**: device that monitors the error and changes the input of the plant with the goal of forcing the error to zero

STABILITY ANALYSIS OF FEEDBACK CONTROL SYSTEMS

- Often, we want to ensure that a system is BIBO stable.
- The BIBO stability property is more easily characterized in the z domain than in the time domain.
- Therefore, the z domain is extremely useful for the stability analysis of systems.

Unilateral z Transform

UNILATERAL Z TRANSFORM

- The **unilateral z transform** of the sequence x, denoted $\mathcal{Z}_{\mathrm{u}}x$ or X, is defined as

$$\mathcal{Z}_{\mathrm{u}}x(z) = X(z) = \sum_{n=0}^{\infty} x(n)z^{-n}.$$

- The unilateral z transform is related to the bilateral z transform as follows:

$$\mathcal{Z}_{\mathrm{u}}x(z) = \sum_{n=0}^{\infty} x(n)z^{-n} = \sum_{n=-\infty}^{\infty} x(n)u(n)z^{-n} = \mathcal{Z}\{xu\}(z).$$

- In other words, the unilateral z transform of the sequence x is simply the bilateral z transform of the sequence xu.
- Since $\mathcal{Z}_{\mathrm{u}}x = \mathcal{Z}\{xu\}$ and xu is always a ***right-sided*** sequence, the ROC associated with $\mathcal{Z}_{\mathrm{u}}x$ is always the ***exterior of a circle***.
- For this reason, we often ***do not explicitly indicate the ROC*** when working with the unilateral z transform.

UNILATERAL Z TRANSFORM

- With the unilateral z transform, the same inverse transform equation is used as in the bilateral case.
- The unilateral z transform is ***only invertible for causal sequences***. In particular, we have

$$\begin{aligned}\mathcal{Z}_{\mathrm{u}}^{-1}\{\mathcal{Z}_{\mathrm{u}}\{x\}\}(n) &= \mathcal{Z}_{\mathrm{u}}^{-1}\{\mathcal{Z}\{xu\}\}(n) \\ &= \mathcal{Z}^{-1}\{\mathcal{Z}\{xu\}\}(n) \\ &= x(n)u(n) \\ &= \begin{cases} x(n) & n \geq 0 \\ 0 & \text{otherwise.} \end{cases}\end{aligned}$$

- For a noncausal sequence x, we can only recover $x(n)$ for $n \geq 0$.
- Due to the close relationship between the unilateral and bilateral z transforms, these two transforms have some similarities in their properties.
- Since these two transforms are not identical, however, their properties differ in some cases, often in subtle ways.

PROPERTIES OF THE UNILATERAL Z TRANSFORM

Property	Time Domain	Z Domain
Linearity	$a_1x_1(n)+a_2x_2(n)$	$a_1X_1(z)+a_2X_2(z)$
Time Delay	$x(n-1)$	$z^{-1}X(z)+x(-1)$
Time Advance	$x(n+1)$	$zX(z)-zx(0)$
Modulation	$a^n x(n)$	$X(a^{-1}z)$
	$e^{j\Omega_0 n}x(n)$	$X(e^{-j\Omega_0}z)$
Conjugation	$x^*(n)$	$X^*(z^*)$
Upsampling	$(\uparrow M)x(n)$	$X(z^M)$
Downsampling	$(\downarrow M)x(n)$	$\frac{1}{M}\sum_{k=0}^{M-1} X\left(e^{-j2\pi k/M}z^{1/M}\right)$
Convolution	$x_1 * x_2(n)$, x_1 and x_2 are causal	$X_1(z)X_2(z)$
Z-Domain Diff.	$nx(n)$	$-z\frac{d}{dz}X(z)$
Differencing	$x(n)-x(n-1)$	$(1-z^{-1})X(z)-x(-1)$
Accumulation	$\sum_{k=0}^{n} x(k)$	$\frac{1}{1-z^{-1}}X(z)$

Property	
Initial Value Theorem	$x(0)=\lim_{z\to\infty} X(z)$
Final Value Theorem	$\lim_{n\to\infty} x(n)=\lim_{z\to 1}[(z-1)X(z)]$

UNILATERAL Z TRANSFORM PAIR

Pair	$x(n),\ n \geq 0$	$X(z)$
1	$\delta(n)$	1
2	1	$\frac{z}{z-1}$
3	n	$\frac{z}{(z-1)^2}$
4	a^n	$\frac{z}{z-a}$
5	$a^n n$	$\frac{az}{(z-a)^2}$
6	$\cos(\Omega_0 n)$	$\frac{z(z-\cos\Omega_0)}{z^2-2(\cos\Omega_0)z+1}$
7	$\sin(\Omega_0 n)$	$\frac{z\sin\Omega_0}{z^2-2(\cos\Omega_0)z+1}$
8	$\lvert a\rvert^n \cos(\Omega_0 n)$	$\frac{z(z-\lvert a\rvert\cos\Omega_0)}{z^2-2\lvert a\rvert(\cos\Omega_0)z+\lvert a\rvert^2}$
9	$\lvert a\rvert^n \sin(\Omega_0 n)$	$\frac{z\lvert a\rvert\sin\Omega_0}{z^2-2\lvert a\rvert(\cos\Omega_0)z+\lvert a\rvert^2}$

SOLVING DIFFERENCE EQUATIONS USING THE UNILATERAL Z-T

- Many systems of interest in engineering applications can be characterized by constant-coefficient linear difference equations.
- One common use of the unilateral z transform is in solving constant-coefficient linear difference equations with nonzero initial conditions.