ARM Cortex™-M0

32-BIT MICROCONTROLLER

NuMicro™ Family
Mini51 Series
Technical Reference Manual

The information described in this document is the exclusive intellectual property of Nuvoton Technology Corporation and shall not be reproduced without permission from Nuvoton.

Nuvoton is providing this document only for reference purposes of NuMicro microcontroller based system design. Nuvoton assumes no responsibility for errors or omissions.

All data and specifications are subject to change without notice.

For additional information or questions, please contact: Nuvoton Technology Corporation.

www.nuvoton.com

Figure 5.9-9 I^{2}C Time-out Count Block Diagram 173
Figure 5.9-10 Legend for the Following Five Figures 185
Figure 5.9-11 Master Transmitter Mode 186
Figure 5.9-12 Master Receiver Mode 187
Figure 5.9-13 Slave Transmitter Mode 188
Figure 5.9-14 Slave Receiver Mode 189
Figure 5.9-15 GC Mode 190
Figure 5.10-1 Application Circuit Diagram 192
Figure 5.10-2 PWM Block Diagram 193
Figure 5.10-3 PWM Generator 0 Architecture Diagram 193
Figure 5.10-4 PWM Generator 2 Architecture Diagram 194
Figure 5.10-5 PWM Generator 4 Architecture Diagram 194
Figure 5.10-6 Edge-aligned PWM 196
Figure 5.10-7 PWM Edge-aligned Waveform Output 196
Figure 5.10-8 Edge-aligned Flow Diagram 197
Figure 5.10-9 Legend of Internal Comparator Output of PWM-Timer 198
Figure 5.10-10 PWM Timer Operation Timing 198
Figure 5.10-11 Center-aligned Mode 199
Figure 5.10-12 PWM Center-aligned Waveform Output 200
Figure 5.10-13 Center-aligned Flow Diagram (INT_TYPE = 0) 201
Figure 5.10-14 PWM Double Buffering Illustration 202
Figure 5.10-15 PWM Controller Output Duty Ratio 202
Figure 5.10-16 Dead-zone Insertion 203
Figure 5.10-17 Initial State and Polarity Control with Rising Edge Dead-zone Insertion 205
Figure 5.10-18 Motor Control PWM Architecture 206
Figure 5.11-1 SPI Block Diagram 228
Figure 5.11-3 SPI Slave Mode Application Block Diagram 229
Figure 5.11-4 Two Transfer (Burst Mode) in One Transaction 231
Figure 5.11-5 Word Suspend Mode 231
Figure 5.11-6 Byte Reorder 232
Figure 5.11-7 Byte Suspend Mode 232
Figure 5.11-8 Variable Serial Clock Frequency 233
Figure 5.11-9 SPI Timing in Master Mode 234
Figure 5.11-10 SPI Timing in Master Mode (Alternate Phase of SPICLK) 235
Figure 5.11-11 SPI Timing in Slave Mode 235
Figure 5.11-12 SPI Timing in Slave Mode (Alternate Phase of SPICLK) 236

Figure 5.12-1 Timer Controller Block Diagram 252
Figure 5.12-2 Clock Source of Timer Controller 252
Figure 5.12-3 Continuous Counting Mode 254
Figure 5.13-1 UART Clock Control Diagram 270
Figure 5.13-2 UART Block Diagram 271
Figure 5.13-3 Auto Flow Control Block Diagram 273
Figure 5.13-4 IrDA Block Diagram 274
Figure 5.13-5 IrDA TX/RX Timing Diagram 275
Figure 5.13-6 Structure of RS-485 Frame 277
Figure 5.14-1 Timing of Interrupt and Reset Signal 303
Figure 5.14-2 Watchdog Timer Clock Control 303
Figure 5.14-3 Watchdog Timer Block Diagram 304
Figure 6.1-1 Functional Block Diagram 309
Figure 8.3-1 Typical Crystal Application Circuit 332

List of Tables

Table 3.3-1 NuMicro Mini51™ Series Pin Description 20
Table 5.1-1 Address Space Assignments for On-Chip Modules 23
Table 5.2-1 Exception Model 25
Table 5.2-2 System Interrupt Map 26
Table 5.2-3 Vector Table Format 26
Table 5.3-1 Memory Mapping Table 49
Table 5.4-1 Peripherals Engine Clock Source Selection Table 79
Table 5.4-2 Power-down Mode Control Table 85
Table 5.7-1 Memory Address Map 123
Table 5.7-2 Boot Selection Table 125
Table 5.7-3 Data Flash Table 125
Table 5.7-4 Data Flash Configuration Example 129
Table 5.7-5 ISP Command Table 132
Table 5.11-1 Byte Order and Byte Clock Idle Internal Conditions 233
Table 5.12-1 Input Capture Mode Operation 255
Table 5.13-1 UART Baud Rate Setting Table 267
Table 5.13-2 UART Baud Rate Setting Table 267
Table 5.13-3 UART Interrupt Sources and Flags Table In Software Mode 294
Table 5.13-4 UART Baud Rate Setting Table 297
Table 5.14-1 Watchdog Time-out Interval Selection 302

1 GENERAL DESCRIPTION

The NuMicro Mini51™ series 32-bit microcontroller is embedded with an ARM® Cortex™-M0 core for industrial controls and applications which require high performance, high integration, and low cost. The Cortex™-M0 is the newest ARM embedded processor with 32-bit performance at a cost equivalent to the traditional 8-bit microcontroller.

The NuMicro Mini51™ series can run up to 24 MHz, and thus can afford to support a variety of industrial controls and applications requiring high CPU performance. The NuMicro Mini51™ series provides 4K/8K/16K-byte embedded program flash, size configurable data flash (shared with program flash), 2K-byte flash for the ISP, and 2K-byte embedded SRAM.

A number of system-level peripheral functions, such as I/O Port, Timer, UART, SPI, I^2C, PWM, ADC, Watchdog Timer, and low voltage detector, have been incorporated in the NuMicro Mini51™ series to reduce component count, board space, and system cost. These useful functions make the NuMicro Mini51™ series powerful for a wide range of applications.

Additionally, the NuMicro Mini51™ series is equipped with ISP (In-System Programming) and ICP (In-Circuit Programming) functions, allowing user to update program memory without removing a chip from an actual end product.

2 FEATURES

- Core
  - ARM® Cortex™-M0 core running up to 24 MHz
  - One 24-bit system timer
  - Supports low power Idle mode
  - A single-cycle 32-bit hardware multiplier
  - NVIC for 32 interrupt inputs, each with 4-level priority
  - Supports Serial Wire Debug (SWD) with 2 watchpoints/4 breakpoints
- Built-in LDO for Wide Operating Voltage Range: 2.5V to 5.5V
- Memory
  - 4KB/8KB/16KB flash memory for program memory (APROM)
  - Configurable flash memory for data memory (Data Flash)
  - 2KB flash memory for loader (LDROM)
  - 2KB SRAM for internal scratch-pad RAM (SRAM)
- In-System Programming (ISP) and In-Circuit Programming (ICP)
- Clock Control
  - Programmable system clock source
    - Switch clock sources on-the-fly
  - 4 ~ 24 MHz crystal oscillator (HXT)
  - 32.768K crystal oscillator (LXT) for idle wake-up and system operation clock
  - 22.1184 MHz internal oscillator (HIRC) (1% accuracy at 25^0C, 5V)
    - Dynamically calibrating the HIRC OSC to 22.0 MHz ±1% from -40^0C to 85^0C by external 32.768K crystal oscillator (LXT)
  - 10 KHz internal low-power oscillator (LIRC) for watchdog and idle wake-up
- I/O Port
  - Up to 30 GPIO (General Purpose I/O) pins for LQFP-48 package
  - Software-configured I/O type
    - Quasi-bidirectional input/output
    - Push-pull output
    - Open-drain output
    - Input-only (high impendence)
  - Optional Schmitt trigger input
- Timer
  - Two 24-bit Timers with 8-bit prescaler
    - Supports Event Counter mode
    - Supports Toggle Output mode

- Supports external trigger in Pulse Width Measurement mode
  - Supports external trigger in Pulse Width Capture mode

- Watchdog Timer
  - Programmable clock source and time-out period
  - Supports wake-up function in Power-down mode and Idle mode
  - Interrupt or reset selectable when time-out happens
- PWM
  - Up to three built-in 16-bit PWM generators with six PWM outputs or three complementary paired PWM outputs
  - Supports edge alignment or center alignment
  - Supports fault detection
  - Individual clock source, clock divider, 8-bit prescalar and dead-zone generator for each PWM generator
  - PWM interrupt synchronized to PWM period
- UART (Universal Asynchronous Receiver/Transmitters)
  - One UART device
  - Buffered receiver and transmitter with 16-byte FIFO
  - Optional flow control function (CTSn and RTSn)
  - Supports IrDA (SIR) function
  - Programmable baud-rate generator up to 1/16 system clock
  - Supports RS-485 function
- SPI (Serial Peripheral Interface)
  - One SPI device
  - Masters up to 12 MHz, and Slaves up to 4 MHz
  - Supports SPI Master/Slave mode
  - Full duplex synchronous serial data transfer
  - Variable length of transfer data from 1 to 32 bits
  - MSB or LSB first data transfer
  - Rx and Tx on both rising or falling edge of serial clock independently
  - Byte Suspend mode in 32-bit transmission
- I^2C
  - Supports Master/Slave mode
  - Bi-directional data transfer between masters and slaves
  - Multi-master bus (no central master)
  - Arbitration between simultaneously transmitting masters without corruption of serial data on the bus
  - Serial clock synchronization allowing devices with different bit rates to

communicate via one serial bus

- Serial clock synchronization used as a handshake mechanism to suspend and resume serial transfer
- Programmable clocks allowing for versatile rate control
- Supports multiple address recognition (4 slave addresses with mask option)

- ADC (Analog-to-Digital Converter)
  - 10-bit SAR ADC with 150K SPS
  - Up to 8-ch single-end input and one internal input from band-gap
  - Conversion started by software or external pin
- Analog Comparator
  - Two analog comparators with programmable 16-level internal voltage reference
  - Built-in CRV (comparator reference voltage)
- BOD (Brown-Out Detection) Reset
  - Three programmable threshold levels: 3.8V/2.7V/2.0V (default as 2.0V)
  - Optional BOD interrupt or reset
- 96-bit unique ID
- Operating Temperature: -40℃~85℃
- Packages:
  - Green package (RoHS)
  - LQFP 48-pin (7x7), QFN 33-pin (5x5), QFN 33-pin (4x4)

3 PARTS INFORMATION LIST AND PIN CONFIGURATION

3.1 NuMicro Mini51™ Series Product Selection Guide

Part Number	APROM	RAM	Data Flash	ISP Loader ROM	I/O	Timer	Connectivity			Comp.	PWM	ADC	ISP ICP	IRC 22.1184 MHz	Package
							UART	SPI	I^2C						
MINI51LAN	4 KB	2 KB	Configurable	2 KB	up to 30	2x32-bit	1	1	1	2	6	8x10-bit	v	v	LQFP48
MINI51ZAN	4 KB	2 KB	Configurable	2 KB	up to 29	2x32-bit	1	1	1	2	6	8x10-bit	v	v	QFN33(5x5)
MINI51TAN	4 KB	2 KB	Configurable	2 KB	up to 29	2x32-bit	1	1	1	2	6	8x10-bit	v	v	QFN33(4x4)
MINI52LAN	8 KB	2 KB	Configurable	2 KB	up to 30	2x32-bit	1	1	1	2	6	8x10-bit	v	v	LQFP48
MINI52ZAN	8 KB	2 KB	Configurable	2 KB	up to 29	2x32-bit	1	1	1	2	6	8x10-bit	v	v	QFN33(5x5)
MINI52TAN	8 KB	2 KB	Configurable	2 KB	up to 29	2x32-bit	1	1	1	2	6	8x10-bit	v	v	QFN33(4x4)
MINI54LAN	16 KB	2 KB	Configurable	2 KB	up to 30	2x32-bit	1	1	1	2	6	8x10-bit	v	v	LQFP48
MINI54ZAN	16 KB	2 KB	Configurable	2 KB	up to 29	2x32-bit	1	1	1	2	6	8x10-bit	v	v	QFN33(5x5)
MINI54TAN	16 KB	2 KB	Configurable	2 KB	up to 29	2x32-bit	1	1	1	2	6	8x10-bit	v	v	QFN33(4x4)

Figure 3.1-1 NuMicro Mini51™ Series Product Selection Guide

3.2 PIN CONFIGURATION

3.2.1 LQFP 48-pin

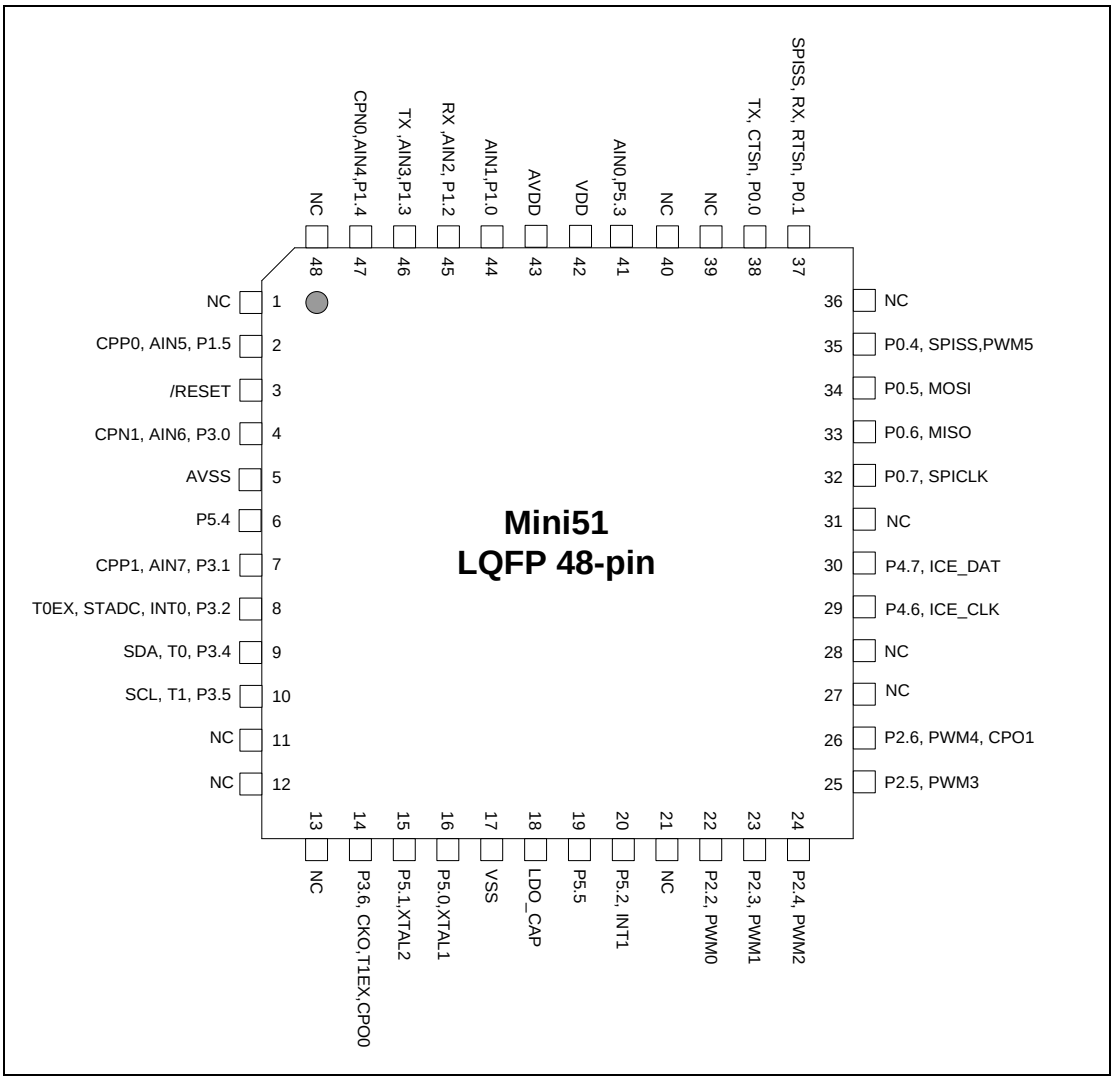

Figure 3.2-1 NuMicro Mini51™ Series LQFP 48-pin Assignment

3.2.2 QFN 33-pin

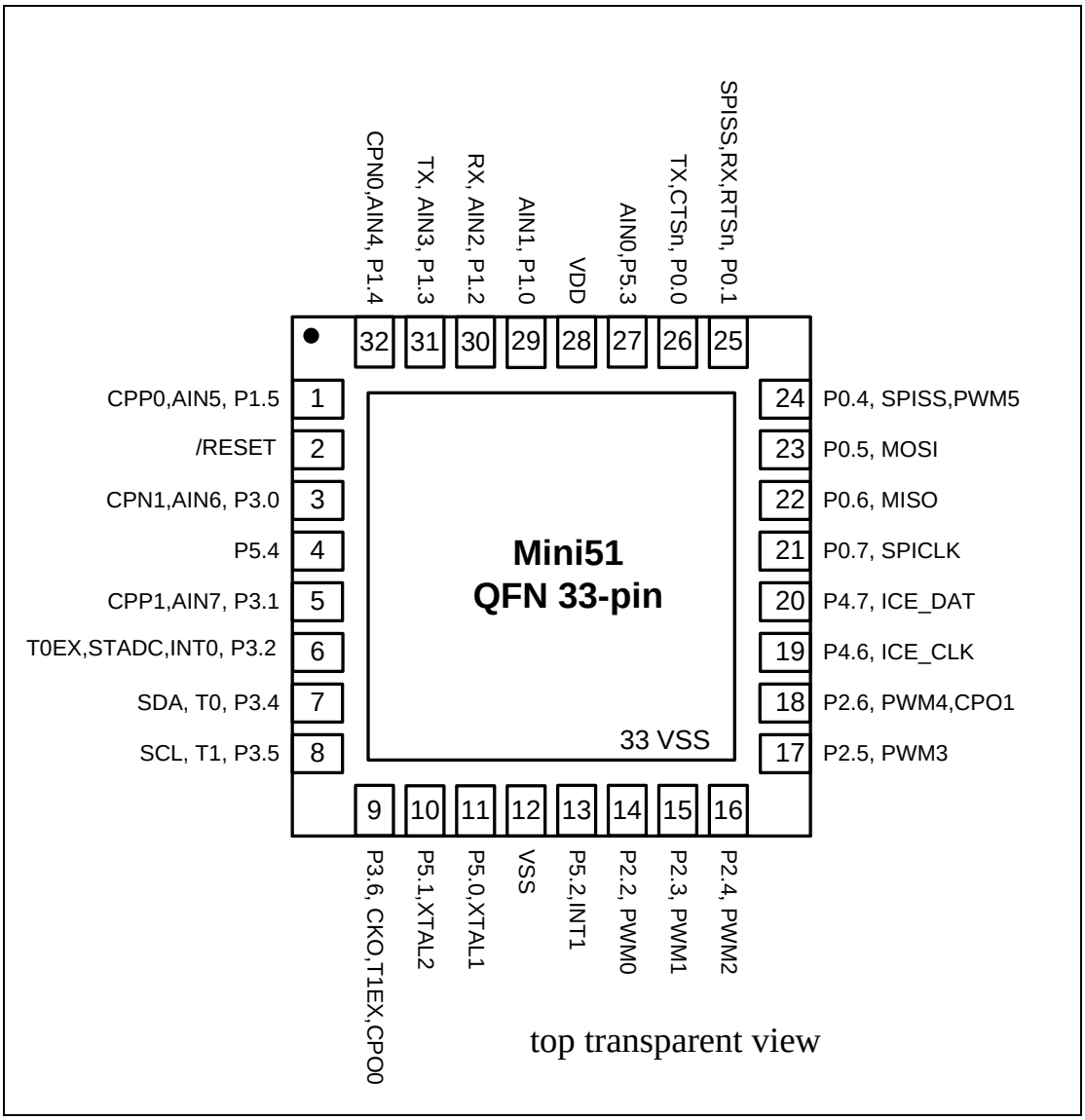

Figure 3.2-2 NuMicro Mini51™ Series QFN 33-pin Assignment

3.3 Pin Description

Pin Number		Pin Name	Pin Type	Description
LQFP 48-pin	QFN 33-pin			
1		NC		Not connected
2	1	P1.5	**I/O**	Digital GPIO pin
		AIN5	**AI**	ADC analog input pin
		CPP0	**AI**	Analog comparator Positive input pin
3	2	/RESET	**I(ST)**	The Schmitt trigger input pin for hardware device reset. A "**Low**" on this pin for 768 clock counter of Internal RC 22.1184 MHz while the system clock is running will reset the device. /RESET pin has an internal pull-up resistor allowing power-on reset by simply connecting an external capacitor to GND.
4	3	P3.0	**I/O**	Digital GPIO pin
		AIN6	**AI**	ADC analog input pin
		CPN1	**AI**	Analog comparator negative input pin
5		AVSS	**AP**	Ground pin for analog circuit
6	4	P5.4	**I/O**	Digital GPIO pin
7	5	P3.1	**I/O**	Digital GPIO pin
		AIN7	**AI**	ADC analog input pin
		CPP1	**AI**	Analog comparator positive input pin
8	6	P3.2	**I/O**	Digital GPIO pin
		INT0	**I**	External interrupt 0 input pin
		STADC	**I**	ADC external trigger input pin
		T0EX	**I**	Timer 0 external capture/reset trigger input pin
9	7	P3.4	**I/O**	Digital GPIO pin
		T0	**I/O**	Timer 0 external event counter input pin
		SDA	**I/O**	I^2C data I/O pin
10	8	P3.5	**I/O**	Digital GPIO pin
		T1	**I/O**	Timer 1 external event counter input pin
		SCL	**I/O**	I^2C clock I/O pin
11		NC		Not connected
12		NC		Not connected
13		NC		Not connected

Pin Number		Pin Name	Pin Type	Description
LQFP 48-pin	QFN 33-pin			
14	9	P3.6	**I/O**	Digital GPIO pin
		CPO0	**O**	Analog comparator output pin
		CKO	**O**	Frequency divider output pin
		T1EX	**I**	Timer 1 external capture/reset trigger input pin
15	10	P5.1	**I/O**	Digital GPIO pin
		XTAL2	**O**	The output pin from the internal inverting amplifier. It emits the inverted signal of XTAL1.
16	11	P5.0	**I/O**	Digital GPIO pin
		XTAL1	**I**	The input pin to the internal inverting amplifier. The system clock could be from external crystal or resonator.
17	12	VSS	**P**	Ground pin for digital circuit
	33			
18		LDO_CAP	**P**	LDO output pin
19		P5.5	**I/O**	Digital GPIO pin User program must enable pull-up resistor in the QFN-33 package.
20	13	P5.2	**I/O**	Digital GPIO pin
		INT1	**I**	External interrupt 1 input pin
21		NC		Not connected
22	14	P2.2	**I/O**	Digital GPIO pin
		PWM0	**O**	PWM0 output of PWM unit
23	15	P2.3	**I/O**	Digital GPIO pin
		PWM1	**O**	PWM1 output of PWM unit
24	16	P2.4	**I/O**	Digital GPIO pin
		PWM2	**O**	PWM2 output of PWM unit
25	17	P2.5	**I/O**	Digital GPIO pin
		PWM3	**O**	PWM3 output of PWM unit
26	18	P2.6	**I/O**	Digital GPIO pin
		PWM4	**O**	PWM4 output of PWM unit
		CPO1	**O**	Analog comparator output pin
27		NC		Not connected

Pin Number		Pin Name	Pin Type	Description
LQFP 48-pin	QFN 33-pin			
		AIN1	**AI**	ADC analog input pin
45	30	P1.2	**I/O**	Digital GPIO pin
		AIN2	**AI**	ADC analog input pin
		RX	**I**	UART data receiver input pin
46	31	P1.3	**I/O**	Digital GPIO pin
		AIN3	**AI**	ADC analog input pin
		TX	**O**	UART transmitter output pin
47	32	P1.4	**I/O**	Digital GPIO pin
		AIN4	**I/O**	PWM5: PWM output/Capture input
		CPN0	**AI**	Analog comparator negative input pin
48		NC		Not connected

Table 3.3-1 NuMicro Mini51™ Series Pin Description

[1] I/O type description: I: input, O: output, I/O: quasi bi-direction, D: open-drain, P: power pin, ST: Schmitt trigger, A: Analog input.

4 BLOCK DIAGRAM

4.1 NuMicro Mini51™ Block Diagram

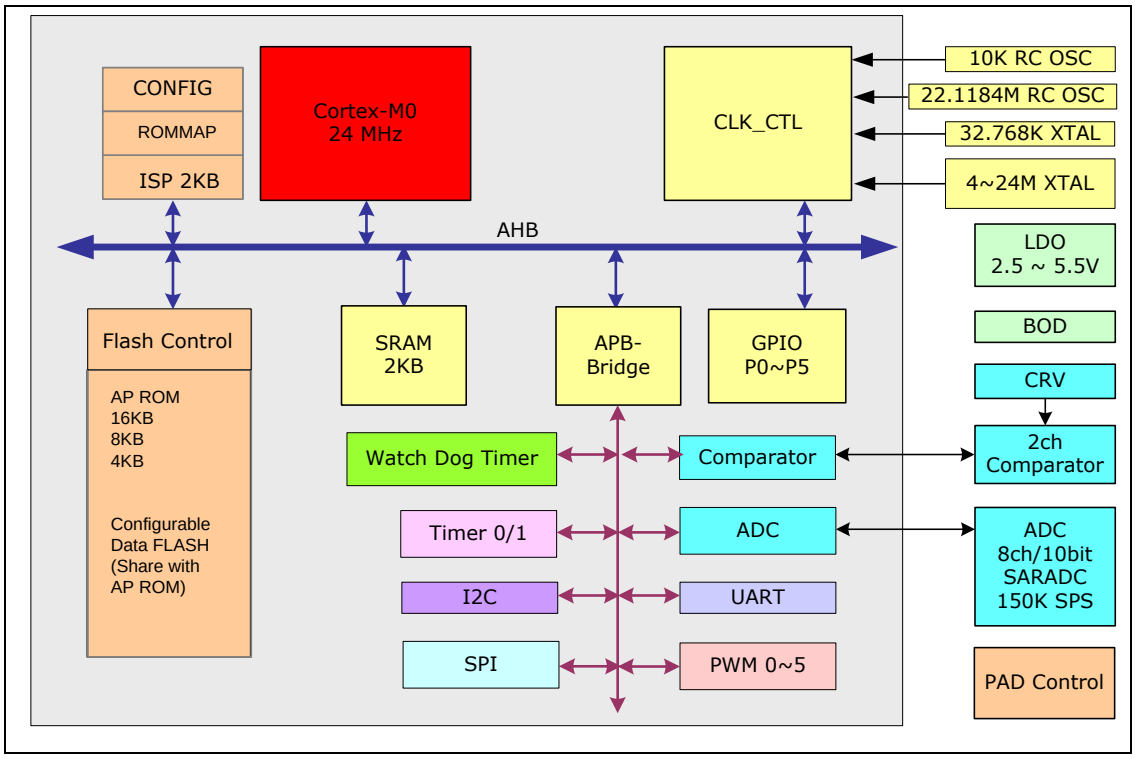

Figure 4.1-1 NuMicro Mini51™ Series Block Diagram

5 FUNCTIONAL DESCRIPTION

5.1 Memory Organization

5.1.1 Overview

The NuMicro Mini51™ series provides a 4G-byte address space for programmers. The memory locations assigned to each on-chip modules are shown in Table 5.1-1. The detailed register and memory addressing and programming will be described in the following sections for individual on-chip modules. The NuMicro Mini51™ series only supports little-endian data format.

5.1.2 System Memory Map

The memory locations assigned to each on-chip controllers are shown in the following table.

Address Space	Token	Controllers
Flash and SRAM Memory Space		
0x0000_0000 – 0x0000_3FFF	FLASH_BA	Flash Memory Space (16 KB)
0x2000_0000 – 0x2000_07FF	SRAM_BA	SRAM Memory Space (2 KB)
AHB Controllers Space (0x5000_0000 – 0x501F_FFFF)		
0x5000_0000 – 0x5000_01FF	GCR_BA	Global Control Registers
0x5000_0200 – 0x5000_02FF	CLK_BA	Clock Control Registers
0x5000_0300 – 0x5000_03FF	INT_BA	Interrupt Multiplexer Control Registers
0x5000_4000 – 0x5000_7FFF	GP_BA	GPIO Control Registers
0x5000_C000 – 0x5000_FFFF	FMC_BA	Flash Memory Control Registers
APB1 Controllers Space (0x4000_0000 – 0x401F_FFFF)		
0x4000_4000 – 0x4000_7FFF	WDT_BA	Watchdog Timer Control Registers
0x4001_0000 – 0x4001_3FFF	TMR_BA	Timer0/Timer1 Control Registers
0x4002_0000 – 0x4002_3FFF	I2C_BA	I^2C Interface Control Registers
0x4003_0000 – 0x4003_3FFF	SPI_BA	SPI Control Registers
0x4004_0000 – 0x4004_3FFF	PWM_BA	PWM Control Registers
0x4005_0000 – 0x4005_3FFF	UART_BA	UART Control Registers
0x400D_0000 – 0x400D_3FFF	CMP_BA	Analog Comparator Control Registers
0x400E_0000 – 0x400E_3FFF	ADC_BA	Analog-Digital-Converter (ADC) Control Registers
System Controllers Space (0xE000_E000 – 0xE000_EFFF)		
0xE000_E010 – 0xE000_E0FF	SCS_BA	System Timer Control Registers
0xE000_E100 – 0xE000_ECFF	SCS_BA	Nested Vectored Interrupt Control Registers
0xE000_ED00 – 0xE000_ED8F	SCB_BA	System Control Block Registers

Table 5.1-1 Address Space Assignments for On-Chip Modules

5.2 Nested Vectored Interrupt Controller (NVIC)

5.2.1 Overview

The Cortex™-M0 CPU provides an interrupt controller as an integral part of the exception mode, named "Nested Vectored Interrupt Controller (NVIC)". It is closely coupled to the processor kernel and provides the following features.

5.2.2 Features

- Nested and Vectored interrupt support
- Automatic processor state saving and restoration
- Dynamic priority change
- Reduced and deterministic interrupt latency

The NVIC prioritizes and handles all supported exceptions. All exceptions are handled in "Handler mode". This NVIC architecture supports 32 (IRQ[31:0]) discrete interrupts with 4 levels of priority. All of the interrupts and most of the system exceptions can be configured to different priority levels. When an interrupt occurs, the NVIC will compare the priority of the new interrupt to the current running one's priority. If the priority of the new interrupt is higher than the current one, the new interrupt handler will override the current handler.

When an interrupt is accepted, the starting address of the Interrupt Service Routine (ISR) is fetched from a vector table in memory. There is no need to determine which interrupt is accepted and branch to the starting address of the correlated ISR by software. While the starting address is fetched, the NVIC will also automatically save the processor state including the registers "PC, PSR, LR, R0~R3, R12" to the stack. At the end of the ISR, the NVIC will restore the mentioned registers from stack and resume the normal execution. Thus it will take less and deterministic time to process the interrupt request.

The NVIC supports "Tail Chaining" which handles back-to-back interrupts efficiently without the overhead of states saving and restoration and therefore reduces delay time in switching to pending ISR at the end of current ISR. The NVIC also supports "Late Arrival" which improves the efficiency of concurrent ISRs. When a higher priority interrupt request occurs before the current ISR starts to execute (at the stage of state saving and starting address fetching), the NVIC will give priority to the higher one without delay penalty. Thus it advances the real-time capability.

For more detailed information, please refer to the "ARM® Cortex™-M0 Technical Reference Manual" and "ARM® v6-M Architecture Reference Manual".

5.2.3 Exception Model and System Interrupt Map

The exception model supported by the NuMicro Mini51™ series is listed in the following table. Software can set four levels of priority on some of these exceptions as well as on all interrupts. The highest user-configurable priority is denoted as "0" and the lowest priority is denoted as "3". The default priority of all the user-configurable interrupts is "0". Note that the priority "0" is treated as the fourth priority on the system, after the three system exceptions "Reset", "NMI" and "Hard

Fault".

Exception Name	Exception Number	Priority
Reset	1	-3
NMI	2	-2
Hard Fault	3	-1
Reserved	4 ~ 10	Reserved
SVCall	11	Configurable
Reserved	12 ~ 13	Reserved
PendSV	14	Configurable
SysTick	15	Configurable
Interrupt (IRQ0 ~ IRQ31)	16 ~ 47	Configurable

Table 5.2-1 Exception Model

Exception Number	IRQ Number (Bit in Interrupt Registers)	Exception Name	Source IP	Exception Description	Power-down Wake-up
1 ~ 15	-	**-**	-	System exceptions	-
16	0	**BOD_OUT**	Brown-out	Brown-out low voltage detected interrupt	Yes
17	1	**WDT_INT**	WDT	Watchdog Timer interrupt	Yes
18	2	**EINT0**	GPIO	External signal interrupt from P3.2 pin	Yes
19	3	**EINT1**	GPIO	External signal interrupt from P5.2 pin	Yes
20	4	**GP0/1_INT**	GPIO	External signal interrupt from GPIO group P0~P1	Yes
21	5	**GP2/3/4_INT**	GPIO	External signal interrupt from GPIO group P2~P4 except P3.2	Yes
22	6	**PWM_INT**	PWM	PWM interrupt	No
23	7	**BRAKE_INT**	PWM	PWM interrupt	No
24	8	**TMR0_INT**	TMR0	Timer 0 interrupt	Yes
25	9	**TMR1_INT**	TMR1	Timer 1 interrupt	Yes
26 ~ 27	10 ~ 11	**-**	-	-	
28	12	**UART_INT**	UART	UART interrupt	Yes

Exception Number	IRQ Number (Bit in Interrupt Registers)	Exception Name	Source IP	Exception Description	Power-down Wake-up
29	13	**-**	-	-	
30	14	**SPI_INT**	SPI	SPI interrupt	No
31	15	**-**	-	-	
32	16	**GP5_INT**	GPIO	External signal interrupt from GPIO group P5 except P5.2	Yes
33	17	**HFIRC_TRIM_INT**	HFIRC	HFIRC trim interrupt	No
34	18	**I2C_INT**	I^2C	I^2C interrupt	No
35 ~ 40	19 ~ 24	**-**	-	-	
41	25	**ACMP_INT**	ACMP	Analog Comparator 0 or 1 interrupt	Yes
42 ~ 43	26 ~ 27	**-**	-	-	
44	28	**PWRWU_INT**	CLKC	Clock controller interrupt for chip wake-up from Power-down state	Yes
45	29	**ADC_INT**	ADC	ADC interrupt	No
46 ~ 47	30 ~ 31	**-**	-	-	

Table 5.2-2 System Interrupt Map

5.2.4 Vector Table

When an interrupt is accepted, the processor will automatically fetch the starting address of the interrupt service routine (ISR) from a vector table in memory. For ARMv6-M, the vector table based address is fixed at 0x0000_0000. The vector table contains the initialization value for the stack pointer on reset, and the entry point addresses for all exception handlers. The vector number on previous page defines the order of entries in the vector table associated with the exception handler entry as illustrated in the previous section.

Vector Table Word Offset (Bytes)	Description
0x00	Initial Stack Pointer Value
Exception Number × 0x04	Exception Entry Pointer using that Exception Number

Table 5.2-3 Vector Table Format

5.2.5 NVIC Operation

NVIC interrupts can be enabled or disabled by writing to their corresponding Interrupt Set-Enable or Interrupt Clear-Enable register bit-field. The registers use a write-1-to-enable and write-1-to-clear policy, and both registers reading back the current enabled state of the corresponding interrupts. When an interrupt is disabled, interrupt assertion will cause the interrupt to become Pending; however, the interrupt will not be activated. If an interrupt is Active when it is disabled, it remains in its Active state until cleared by reset or an exception return. Clearing the enable bit prevents new activations of the associated interrupt.

NVIC interrupts can be pended/un-pended using a complementary pair of registers to those used to enable/disable the interrupts, named the Set-Pending Register and Clear-Pending Register respectively. The registers use a write-1-to-enable and write-1-to-clear policy, both registers reading back the current pended state of the corresponding interrupts. The Clear-Pending Register has no effect on the execution status of an Active interrupt.

NVIC interrupts are prioritized by updating an 8-bit field within a 32-bit register (each register supporting four interrupts).

The general registers associated with the NVIC are all accessible from a block of memory in the System Control Space and will be described in the next section.

5.2.6 NVIC Control Registers

R: read only, **W**: write only, **R/W**: both read and write

Register	Offset	R/W	Description	Reset Value
SCS_BA = 0xE000_E000				
NVIC_ISER	SCS_BA+0x100	R/W	IRQ0 ~ IRQ31 Set-Enable Control Register	0x0000_0000
NVIC_ICER	SCS_BA+0x180	R/W	IRQ0 ~ IRQ31 Clear-Enable Control Register	0x0000_0000
NVIC_ISPR	SCS_BA+0x200	R/W	IRQ0 ~ IRQ31 Set-Pending Control Register	0x0000_0000
NVIC_ICPR	SCS_BA+0x280	R/W	IRQ0 ~ IRQ31 Clear-Pending Control Register	0x0000_0000
NVIC_IPR0	SCS_BA+0x400	R/W	IRQ0 ~ IRQ3 Priority Control Register	0x0000_0000
NVIC_IPR1	SCS_BA+0x404	R/W	IRQ4 ~ IRQ7 Priority Control Register	0x0000_0000
NVIC_IPR2	SCS_BA+0x408	R/W	IRQ8 ~ IRQ11 Priority Control Register	0x0000_0000
NVIC_IPR3	SCS_BA+0x40C	R/W	IRQ12 ~ IRQ15 Priority Control Register	0x0000_0000
NVIC_IPR4	SCS_BA+0x410	R/W	IRQ16 ~ IRQ19 Priority Control Register	0x0000_0000
NVIC_IPR5	SCS_BA+0x414	R/W	IRQ20 ~ IRQ23 Priority Control Register	0x0000_0000
NVIC_IPR6	SCS_BA+0x418	R/W	IRQ24 ~ IRQ27 Priority Control Register	0x0000_0000
NVIC_IPR7	SCS_BA+0x41C	R/W	IRQ28 ~ IRQ31 Priority Control Register	0x0000_0000

IRQ0 ~ IRQ31 Set-Enable Control Register (NVIC_ISER)

Register	Offset	R/W	Description	Reset Value
NVIC_ISER	SCS _BA+0x100	R/W	IRQ0 ~ IRQ31 Set-Enable Control Register	0x0000_0000

31	30	29	28	27	26	25	24
SETENA							
23	**22**	**21**	**20**	**19**	**18**	**17**	**16**
SETENA							
15	**14**	**13**	**12**	**11**	**10**	**9**	**8**
SETENA							
7	**6**	**5**	**4**	**3**	**2**	**1**	**0**
SETENA							

Bits	Description	
[31:0]	**SETENA[31:0]**	Enable one or more interrupts within a group of 32 bits. Each bit represents an interrupt number from IRQ0 ~ IRQ31 (Vector number from 16 ~ 47). 1 = The associated interrupt Enabled. 0 = No effect. The register reads back with the current enable state.

IRQ0 ~ IRQ31 Clear-Enable Control Register (NVIC_ICER)

Register	Offset	R/W	Description	Reset Value
NVIC_ICER	SCS _BA+0x180	R/W	IRQ0 ~ IRQ31 Clear-Enable Control Register	0x0000_0000

31	30	29	28	27	26	25	24
CLRENA							
23	**22**	**21**	**20**	**19**	**18**	**17**	**16**
CLRENA							
15	**14**	**13**	**12**	**11**	**10**	**9**	**8**
CLRENA							
7	**6**	**5**	**4**	**3**	**2**	**1**	**0**
CLRENA							

Bits	Description	
[31:0]	**CLRENA[31:0]**	Disable one or more interrupts within a group of 32 bits. Each bit represents an interrupt number from IRQ0 ~ IRQ31 (Vector number from 16 ~ 47). 1 = The associated interrupt Disabled. 0 = No effect. The register reads back with the current enable state.

IRQ0 ~ IRQ31 Set-Pending Control Register (NVIC_ISPR)

Register	Offset	R/W	Description	Reset Value
NVIC_ISPR	SCS _BA+0x200	R/W	IRQ0 ~ IRQ31 Set-Pending Control Register	0x0000_0000

31	30	29	28	27	26	25	24
SETPEND							
23	**22**	**21**	**20**	**19**	**18**	**17**	**16**
SETPEND							
15	**14**	**13**	**12**	**11**	**10**	**9**	**8**
SETPEND							
7	**6**	**5**	**4**	**3**	**2**	**1**	**0**
SETPEND							

Bits	Description	
[31:0]	**SETPEND[31:0]**	1 = The associated interrupt under software control pended. Each bit represents an interrupt number from IRQ0 ~ IRQ31 (Vector number from 16 ~ 47). 0 = No effect. The register reads back with the current pending state.

IRQ0 ~ IRQ31 Clear-Pending Control Register (NVIC_ICPR)

Register	Offset	R/W	Description	Reset Value
NVIC_ICPR	SCS _BA+0x280	R/W	IRQ0 ~ IRQ31 Clear-Pending Control Register	0x0000_0000

31	30	29	28	27	26	25	24
CLRPEND							
23	**22**	**21**	**20**	**19**	**18**	**17**	**16**
CLRPEND							
15	**14**	**13**	**12**	**11**	**10**	**9**	**8**
CLRPEND							
7	**6**	**5**	**4**	**3**	**2**	**1**	**0**
CLRPEND							

Bits	Description	
[31:0]	**CLRPEND[31:0]**	1 = The associated interrupt under software control un-pended. Each bit represents an interrupt number from IRQ0 ~ IRQ31 (Vector number from 16 ~ 47). 0 = No effect. The register reads back with the current pending state.

IRQ0 ~ IRQ3 Interrupt Priority Register (NVIC_IPR0)

Register	Offset	R/W	Description	Reset Value
NVIC_IPR0	SCS _BA+0x400	R/W	IRQ0 ~ IRQ3 Interrupt Priority Control Register	0x0000_0000

31	30	29	28	27	26	25	24
PRI_3		-					
23	**22**	**21**	**20**	**19**	**18**	**17**	**16**
PRI_2		-					
15	**14**	**13**	**12**	**11**	**10**	**9**	**8**
PRI_1		-					
7	**6**	**5**	**4**	**3**	**2**	**1**	**0**
PRI_0		-					

Bits	Description	
[31:30]	**PRI_3[1:0]**	**Priority of IRQ3** "0" denotes the highest priority and "3" denotes the lowest priority.
[29:24]	**-**	**Reserved**
[23:22]	**PRI_2[1:0]**	**Priority of IRQ2** "0" denotes the highest priority and "3" denotes the lowest priority.
[21:16]	**-**	**Reserved**
[15:14]	**PRI_1[1:0]**	**Priority of IRQ1** "0" denotes the highest priority and "3" denotes the lowest priority.
[13:8]	**-**	**Reserved**
[7:6]	**PRI_0[1:0]**	**Priority of IRQ0** "0" denotes the highest priority and "3" denotes the lowest priority.
[5:0]	**-**	**Reserved**

IRQ4 ~ IRQ7 Interrupt Priority Register (NVIC_IPR1)

Register	Offset	R/W	Description	Reset Value
NVIC_IPR1	SCS _BA+0x404	R/W	IRQ4 ~ IRQ7 Interrupt Priority Control Register	0x0000_0000

31	30	29	28	27	26	25	24
PRI_7		**-**					
23	**22**	**21**	**20**	**19**	**18**	**17**	**16**
PRI_6		**-**					
15	**14**	**13**	**12**	**11**	**10**	**9**	**8**
PRI_5		**-**					
7	**6**	**5**	**4**	**3**	**2**	**1**	**0**
PRI_4		**-**					

Bits	Description	
[31:30]	**PRI_7[1:0]**	**Priority of IRQ7** "0" denotes the highest priority and "3" denotes the lowest priority.
[29:24]	**-**	**Reserved**
[23:22]	**PRI_6[1:0]**	**Priority of IRQ6** "0" denotes the highest priority and "3" denotes the lowest priority.
[21:16]	**-**	**Reserved**
[15:14]	**PRI_5[1:0]**	**Priority of IRQ5** "0" denotes the highest priority and "3" denotes the lowest priority.
[13:8]	**-**	**Reserved**
[7:6]	**PRI_4[1:0]**	**Priority of IRQ4** "0" denotes the highest priority and "3" denotes the lowest priority.
[5:0]	**-**	**Reserved**

IRQ8 ~ IRQ11 Interrupt Priority Register (NVIC_IPR2)

Register	Offset	R/W	Description	Reset Value
NVIC_IPR2	SCS _BA+0x408	R/W	IRQ8 ~ IRQ11 Interrupt Priority Control Register	0x0000_0000

31	30	29	28	27	26	25	24
PRI_11		-					
23	22	21	20	19	18	17	16
PRI_10		-					
15	14	13	12	11	10	9	8
PRI_9		-					
7	6	5	4	3	2	1	0
PRI_8		-					

Bits	Description	
[31:30]	**PRI_11[1:0]**	**Priority of IRQ11** "0" denotes the highest priority and "3" denotes the lowest priority.
[29:24]	-	**Reserved**
[23:22]	**PRI_10[1:0]**	**Priority of IRQ10** "0" denotes the highest priority and "3" denotes the lowest priority.
[21:16]	-	**Reserved**
[15:14]	**PRI_9[1:0]**	**Priority of IRQ9** "0" denotes the highest priority and "3" denotes the lowest priority.
[13:8]	-	**Reserved**
[7:6]	**PRI_8[1:0]**	**Priority of IRQ8** "0" denotes the highest priority and "3" denotes the lowest priority.
[5:0]	-	**Reserved**

IRQ12 ~ IRQ15 Interrupt Priority Register (NVIC_IPR3)

Register	Offset	R/W	Description	Reset Value
NVIC_IPR3	SCS _BA+0x40C	R/W	IRQ12 ~ IRQ15 Interrupt Priority Control Register	0x0000_0000

31	30	29	28	27	26	25	24
PRI_15		**-**					
23	**22**	**21**	**20**	**19**	**18**	**17**	**16**
PRI_14		**-**					
15	**14**	**13**	**12**	**11**	**10**	**9**	**8**
PRI_13		**-**					
7	**6**	**5**	**4**	**3**	**2**	**1**	**0**
PRI_12		**-**					

Bits	Description	
[31:30]	**PRI_15[1:0]**	**Priority of IRQ15** "0" denotes the highest priority and "3" denotes the lowest priority.
[29:24]	**-**	**Reserved**
[23:22]	**PRI_14[1:0]**	**Priority of IRQ14** "0" denotes the highest priority and "3" denotes the lowest priority.
[21:16]	**-**	**Reserved**
[15:14]	**PRI_13[1:0]**	**Priority of IRQ13** "0" denotes the highest priority and "3" denotes the lowest priority.
[13:8]	**-**	**Reserved**
[7:6]	**PRI_12[1:0]**	**Priority of IRQ12** "0" denotes the highest priority and "3" denotes the lowest priority.
[5:0]	**-**	**Reserved**

IRQ16 ~ IRQ19 Interrupt Priority Register (NVIC_IPR4)

Register	Offset	R/W	Description	Reset Value
NVIC_IPR4	SCS _BA+0x410	R/W	IRQ16 ~ IRQ19 Interrupt Priority Control Register	0x0000_0000

31	30	29	28	27	26	25	24
PRI_19		-					
23	**22**	**21**	**20**	**19**	**18**	**17**	**16**
PRI_18		-					
15	**14**	**13**	**12**	**11**	**10**	**9**	**8**
PRI_17		-					
7	**6**	**5**	**4**	**3**	**2**	**1**	**0**
PRI_16		-					

Bits	Description	
[31:30]	**PRI_19[1:0]**	**Priority of IRQ19** "0" denotes the highest priority and "3" denotes the lowest priority.
[29:24]	**-**	**Reserved**
[23:22]	**PRI_18[1:0]**	**Priority of IRQ18** "0" denotes the highest priority and "3" denotes the lowest priority.
[21:16]	**-**	**Reserved**
[15:14]	**PRI_17[1:0]**	**Priority of IRQ17** "0" denotes the highest priority and "3" denotes the lowest priority.
[13:8]	**-**	**Reserved**
[7:6]	**PRI_16[1:0]**	**Priority of IRQ16** "0" denotes the highest priority and "3" denotes the lowest priority.
[5:0]	**-**	**Reserved**

IRQ20 ~ IRQ23 Interrupt Priority Register (NVIC_IPR5)

Register	Offset	R/W	Description	Reset Value
NVIC_IPR5	SCS _BA+0x414	R/W	IRQ20 ~ IRQ23 Interrupt Priority Control Register	0x0000_0000

31	30	29	28	27	26	25	24
PRI_23		**-**					
23	**22**	**21**	**20**	**19**	**18**	**17**	**16**
PRI_22		**-**					
15	**14**	**13**	**12**	**11**	**10**	**9**	**8**
PRI_21		**-**					
7	**6**	**5**	**4**	**3**	**2**	**1**	**0**
PRI_20		**-**					

Bits	Description	
[31:30]	**PRI_23[1:0]**	**Priority of IRQ23** "0" denotes the highest priority and "3" denotes the lowest priority.
[29:24]	**-**	**Reserved**
[23:22]	**PRI_22[1:0]**	**Priority of IRQ22** "0" denotes the highest priority and "3" denotes the lowest priority.
[21:16]	**-**	**Reserved**
[15:14]	**PRI_21[1:0]**	**Priority of IRQ21** "0" denotes the highest priority and "3" denotes the lowest priority.
[13:8]	**-**	**Reserved**
[7:6]	**PRI_20[1:0]**	**Priority of IRQ20** "0" denotes the highest priority and "3" denotes the lowest priority.
[5:0]	**-**	**Reserved**

IRQ24 ~ IRQ27 Interrupt Priority Register (NVIC_IPR6)

Register	Offset	R/W	Description	Reset Value
NVIC_IPR6	SCS _BA+0x418	R/W	IRQ24 ~ IRQ27 Interrupt Priority Control Register	0x0000_0000

31	30	29	28	27	26	25	24
PRI_27		-					
23	**22**	**21**	**20**	**19**	**18**	**17**	**16**
PRI_26		-					
15	**14**	**13**	**12**	**11**	**10**	**9**	**8**
PRI_25		-					
7	**6**	**5**	**4**	**3**	**2**	**1**	**0**
PRI_24		-					

Bits	Description	
[31:30]	**PRI_27[1:0]**	**Priority of IRQ27** "0" denotes the highest priority and "3" denotes the lowest priority.
[29:24]	**-**	**Reserved**
[23:22]	**PRI_26[1:0]**	**Priority of IRQ26** "0" denotes the highest priority and "3" denotes the lowest priority.
[21:16]	**-**	**Reserved**
[15:14]	**PRI_25[1:0]**	**Priority of IRQ25** "0" denotes the highest priority and "3" denotes the lowest priority.
[13:8]	**-**	**Reserved**
[7:6]	**PRI_24[1:0]**	**Priority of IRQ24** "0" denotes the highest priority and "3" denotes the lowest priority.
[5:0]	**-**	**Reserved**

IRQ28 ~ IRQ31 Interrupt Priority Register (NVIC_IPR7)

Register	Offset	R/W	Description	Reset Value
NVIC_IPR7	SCS _BA+0x41C	R/W	IRQ28 ~ IRQ31 Interrupt Priority Control Register	0x0000_0000

31	30	29	28	27	26	25	24
PRI_31		-					
23	**22**	**21**	**20**	**19**	**18**	**17**	**16**
PRI_30		-					
15	**14**	**13**	**12**	**11**	**10**	**9**	**8**
PRI_29		-					
7	**6**	**5**	**4**	**3**	**2**	**1**	**0**
PRI_28		-					

Bits	Description	
[31:30]	**PRI_31[1:0]**	**Priority of IRQ31** "0" denotes the highest priority and "3" denotes the lowest priority.
[29:24]	**-**	**Reserved**
[23:22]	**PRI_30[1:0]**	**Priority of IRQ30** "0" denotes the highest priority and "3" denotes the lowest priority.
[21:16]	**-**	**Reserved**
[15:14]	**PRI_29[1:0]**	**Priority of IRQ29** "0" denotes the highest priority and "3" denotes the lowest priority.
[13:8]	**-**	**Reserved**
[7:6]	**PRI_28[1:0]**	**Priority of IRQ28** "0" denotes the highest priority and "3" denotes the lowest priority.
[5:0]	**-**	**Reserved**

5.2.7 Interrupt Source Control Registers

Besides the interrupt control registers associated with the NVIC, the NuMicro Mini51™ series also implements some specific control registers to facilitate the interrupt functions, including “interrupt source identify”, ”NMI source selection” and “interrupt test mode”, which are described below.

R: read only, **W**: write only, **R/W**: both read and write

Register	Offset	R/W	Description	Reset Value
INT_BA = 0x5000_0300				
IRQ0_SRC	INT_BA+0x00	R	IRQ0 (Brown-out) Interrupt Source Identity	0xXXXX_XXXX
IRQ1_SRC	INT_BA+0x04	R	IRQ1 (WDT) Interrupt Source Identity	0xXXXX_XXXX
IRQ2_SRC	INT_BA+0x08	R	IRQ2 (EINT0) Interrupt Source Identity	0xXXXX_XXXX
IRQ3_SRC	INT_BA+0x0C	R	IRQ3 (EINT1) Interrupt Source Identity	0xXXXX_XXXX
IRQ4_SRC	INT_BA+0x10	R	IRQ4 (GP0/1) Interrupt Source Identity	0xXXXX_XXXX
IRQ5_SRC	INT_BA+0x14	R	IRQ5 (GP2/3/4) Interrupt Source Identity	0xXXXX_XXXX
IRQ6_SRC	INT_BA+0x18	R	IRQ6 (PWM) Interrupt Source Identity	0xXXXX_XXXX
IRQ7_SRC	INT_BA+0x1C	R	IRQ7 (BRAKE) Interrupt Source Identity	0xXXXX_XXXX
IRQ8_SRC	INT_BA+0x20	R	IRQ8 (TMR0) Interrupt Source Identity	0xXXXX_XXXX
IRQ9_SRC	INT_BA+0x24	R	IRQ9 (TMR1) Interrupt Source Identity	0xXXXX_XXXX
IRQ10_SRC	INT_BA+0x28	-	Reserved	0xXXXX_XXXX
IRQ11_SRC	INT_BA+0x2C	-	Reserved	0xXXXX_XXXX
IRQ12_SRC	INT_BA+0x30	R	IRQ12 (UART) Interrupt Source Identity	0xXXXX_XXXX
IRQ13_SRC	INT_BA+0x34	-	Reserved	0xXXXX_XXXX
IRQ14_SRC	INT_BA+0x38	R	IRQ14 (SPI) Interrupt Source Identity	0xXXXX_XXXX
IRQ15_SRC	INT_BA+0x3C	-	Reserved	0xXXXX_XXXX
IRQ16_SRC	INT_BA+0x40	R	IRQ16 (GP5) Interrupt Source Identity	0xXXXX_XXXX
IRQ17_SRC	INT_BA+0x44	R	IRQ17 (HFIRC trim) Interrupt Source Identity	0xXXXX_XXXX
IRQ18_SRC	INT_BA+0x48	R	IRQ18 (I^2C) Interrupt Source Identity	0xXXXX_XXXX
IRQ19_SRC	INT_BA+0x4C	-	Reserved	0xXXXX_XXXX
IRQ20_SRC	INT_BA+0x50	-	Reserved	0xXXXX_XXXX
IRQ21_SRC	INT_BA+0x54	-	Reserved	0xXXXX_XXXX
IRQ22_SRC	INT_BA+0x58	-	Reserved	0xXXXX_XXXX
IRQ23_SRC	INT_BA+0x5C	-	Reserved	0xXXXX_XXXX

Register	Offset	R/W	Description	Reset Value
INT_BA = 0x5000_0300				
IRQ24_SRC	INT_BA+0x60	-	Reserved	0xXXXX_XXXX
IRQ25_SRC	INT_BA+0x64	R	IRQ25 (ACMP) Interrupt Source Identity	0xXXXX_XXXX
IRQ26_SRC	INT_BA+0x68	-	Reserved	0xXXXX_XXXX
IRQ27_SRC	INT_BA+0x6C	-	Reserved	0xXXXX_XXXX
IRQ28_SRC	INT_BA+0x70	R	IRQ28 (PWRWU) Interrupt Source Identity	0xXXXX_XXXX
IRQ29_SRC	INT_BA+0x74	R	IRQ29 (ADC) Interrupt Source Identity	0xXXXX_XXXX
IRQ30_SRC	INT_BA+0x78	-	Reserved	0xXXXX_XXXX
IRQ31_SRC	INT_BA+0x7C	-	Reserved	0xXXXX_XXXX
NMI_CON	INT_BA+0x80	R/W	NMI Source Interrupt Select Control Register	0x0000_0000
MCU_IRQ	INT_BA+0x84	R/W	MCU IRQ Number Identity Register	0x0000_0000

Interrupt Source Identify Register (IRQn_SRC)

Register	Offset	R/W	Description	Reset Value
IRQn_SRC	INT_BA+0x00 …….. INT_BA+0x7C	R	MCU IRQ0 (BOD) Interrupt Source Identity : MCU IRQ31 (Reserved) Interrupt Source Identity	0xXXXX_XXXX

31	30	29	28	27	26	25	24
-							
23	**22**	**21**	**20**	**19**	**18**	**17**	**16**
-							
15	**14**	**13**	**12**	**11**	**10**	**9**	**8**
-							
7	**6**	**5**	**4**	**3**	**2**	**1**	**0**
-					INT_SRC		

Bits	Address	IRQ No.	Description
[31:3]	-	-	**Reserved.**
[2:0]	INT_BA+0x00	0	Bit1~2: Reserved Bit0: BOD_INT
[2:0]	INT_BA+0x04	1	Bit1~2: Reserved Bit0: WDT_INT
[2:0]	INT_BA+0x08	2	Bit1~2: Reserved Bit0: EINT0 – external interrupt 0 from P3.2.
[2:0]	INT_BA+0x0C	3	Bit1~2: Reserved Bit0: EINT1 – external interrupt 1 from P5.2.
[2:0]	INT_BA+0x10	4	Bit2: Reserved Bit1: P1_INT Bit0: P0_INT
[2:0]	INT_BA+0x14	5	Bit2: P4_INT Bit1: P3_INT Bit0: P2_INT
[2:0]	INT_BA+0x18	6	Bit1~2: Reserved Bit0: PWM_INT
[2:0]	INT_BA+0x1C	7	Bit1~2: Reserved Bit0: BRAKE_INT

Bits	Address	IRQ No.	Description
[2:0]	INT_BA+0x20	8	Bit1~2: Reserved Bit0: TMR0_INT
[2:0]	INT_BA+0x24	9	Bit1~2: Reserved Bit0: TMR1_INT
[2:0]	INT_BA+0x28	10	Reserved
[2:0]	INT_BA+0x2C	11	Reserved
[2:0]	INT_BA+0x30	12	Bit1~2: Reserved Bit0: UART_INT
[2:0]	INT_BA+0x34	13	Reserved
[2:0]	INT_BA+0x38	14	Bit1~2: Reserved Bit0: SPI_INT
[2:0]	INT_BA+0x3C	15	Reserved
[2:0]	INT_BA+0x40	16	Bit1~2: Reserved Bit0: P5_INT
[2:0]	INT_BA+0x44	17	Bit1~2: Reserved Bit0: HFIRC_TRIM_INT
[2:0]	INT_BA+0x48	18	Bit1~2: Reserved Bit0: I2C_INT
[2:0]	INT_BA+0x4C	19	Reserved.
[2:0]	INT_BA+0x50	20	Reserved
[2:0]	INT_BA+0x54	21	Reserved
[2:0]	INT_BA+0x58	22	Reserved
[2:0]	INT_BA+0x5C	23	Reserved
[2:0]	INT_BA+0x60	24	Reserved
[2:0]	INT_BA+0x64	25	Bit1~2: Reserved Bit0: ACMP_INT
[2:0]	INT_BA+0x68	26	Reserved
[2:0]	INT_BA+0x6C	27	Reserved
[2:0]	INT_BA+0x70	28	Bit1~2: Reserved Bit0: PWRWU_INT
[2:0]	INT_BA+0x74	29	Bit1~2: Reserved Bit0: ADC_INT
[2:0]	INT_BA+0x78	30	Reserved
[2:0]	INT_BA+0x7C	31	Reserved

NMI Interrupt Source Select Control Register (NMI_SEL)

Register	Offset	R/W	Description	Reset Value
NMI_SEL	INT_BA+0x80	R/W	NMI Source Interrupt Select Control Register	0x0000_0000

31	30	29	28	27	26	25	24
-							
23	**22**	**21**	**20**	**19**	**18**	**17**	**16**
-							
15	**14**	**13**	**12**	**11**	**10**	**9**	**8**
-							**NMI_SEL_EN**
7	**6**	**5**	**4**	**3**	**2**	**1**	**0**
-			**NMI_SEL**				

Bits	Description	
[31:9]	**-**	**Reserved**
[8]	**NMI_SEL_EN**	**NMI Interrupt Source Enable (Write-protected)** Setting this bit will enable NMI_SEL to generate NMI interrupt source of Cortex-M0.
[7:5]	**-**	**Reserved**
[4:0]	**NMI_SEL[4:0]**	**NMI Interrupt Source Selection** The NMI interrupt to Cortex™-M0 CPU can be selected from one of the interrupt[31:0]. The NMI_SEL[4:0] is used to select the NMI interrupt source.

MCU Interrupt Request Source Register (MCU_IRQ)

Register	Offset	R/W	Description	Reset Value
MCU_IRQ	INT_BA+0x84	R/W	MCU Interrupt Request Source Register	0x0000_0000

31	30	29	28	27	26	25	24
MCU_IRQ							
23	**22**	**21**	**20**	**19**	**18**	**17**	**16**
MCU_IRQ							
15	**14**	**13**	**12**	**11**	**10**	**9**	**8**
MCU_IRQ							
7	**6**	**5**	**4**	**3**	**2**	**1**	**0**
MCU_IRQ							

Bits	Description	
[31:0]	**MCU_IRQ[31:0]**	**MCU IRQ Source Register** The MCU_IRQ collects all the interrupts from the peripherals and generates the synchronous interrupt to Cortex-M0 core. There are two modes to generate interrupt to Cortex-M0 - the normal mode and test mode. The MCU_IRQ collects all the interrupts from each peripheral and synchronizes them then interrupts the Cortex-M0. When the MCU_IRQ[n] is “0”, setting MCU_IRQ[n] to “1” will generate an interrupt to Cortex-M0 NVIC[n]. When the MCU_IRQ[n] is “1” (mean an interrupt is assert), setting “1” to the MCU_bit[n] will clear the interrupt and setting MCU_IRQ[n] “0” has no effect.

5.3 System Manager

5.3.1 Overview

The following functions are included in the system manager section:

- System Memory Map
- System Timer (SysTick)
- Nested Vectored Interrupt Controller (NVIC)
- System management registers for product ID
- System management registers for chip and module functional reset and multi-function pin control
- Brown-out and chip miscellaneous Control Register
- Combined peripheral interrupt source identify

5.3.2 System Reset

The system reset includes one of the following as the event occurs. For these reset events flags can be read by RSTSRC register.

- Power-On Reset (POR)
- Low level on the /RESET pin
- Watchdog Time-out Reset (WDT)
- Brown-out Detected Reset (BOD)
- Cortex™-M0 CPU Reset
- Software one shot Reset

5.3.3 System Power Distribution

In this device, the power distribution is divided into three segments.

- Analog power from AVDD and AVSS supplies power for analog module operation
- Digital power from VDD and VSS supplies power to the internal regulator which provides a fixed 1.8V power for digital operation and I/O pins
- Built-in capacitor for internal voltage regulator

The output of internal voltage regulator, LDO_CAP, requires an external capacitor which should be located close to the corresponding pin. Figure 5.3-1 shows the power architecture of this device.

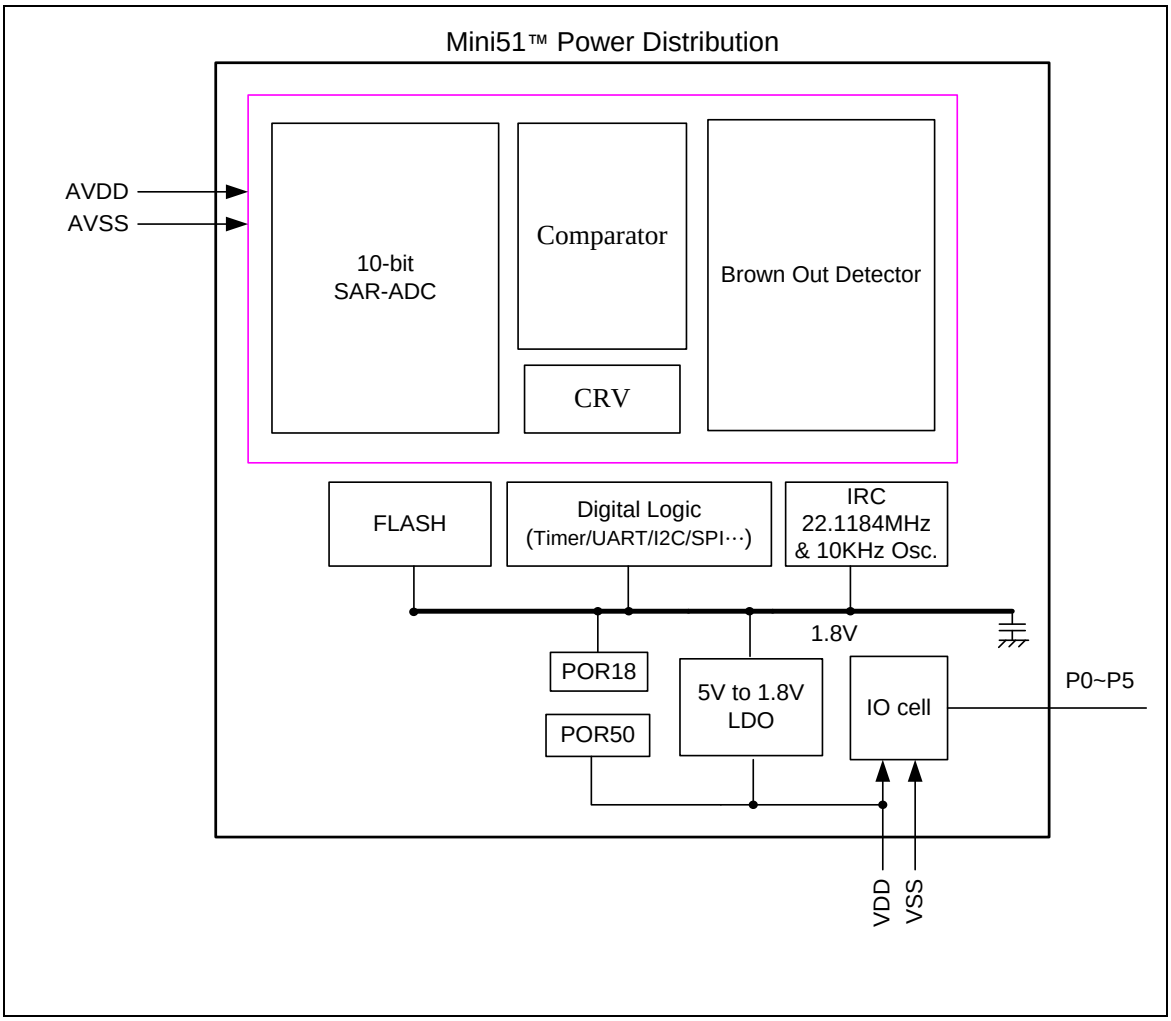

Figure 5.3-1 NuMicro Mini51™ Series Power Distribution Diagram

5.3.4 Memory Mapping Table

	Mini51/52/54	
4 GB	Reserved	0xFFFF_FFFF | 0xE000_F000
	System Control	0xE000_EFFF 0xE000_E000
	Reserved	0xE000_E00F | 0x6002_0000
	Reserved	0x6001_FFFF 0x6000_0000
	Reserved	0x5FFF_FFFF | 0x5020_0000
	AHB	0x501F_FFFF 0x5000_0000
	Reserved	0x4FFF_FFFF | 0x4020_0000
	APB	0x401F_FFFF | 0x4000_0000
1 GB	Reserved	0x3FFF_FFFF | 0x2000_0800
	2 KB SRAM	0x2000_07FF 0x2000_0000
0.5 GB	Reserved	0x1FFF_FFFF | 0x0000_4000
	16 KB on-chip Flash (Mini54)	0x0000_3FFF
	8 KB on-chip Flash (Mini52)	0x0000_1FFF
	4 KB on-chip Flash (Mini51)	0x0000_0FFF 0x0000_0000
0 GB		

System Control

System Control	0xE000_ED00	SCS_BA
External Interrupt Control	0xE000_E100	SCS_BA
System Timer Control	0xE000_E010	SCS_BA

AHB peripherals

FMC	0x5000_C000	FMC_BA
GPIO Control	0x5000_4000	GP_BA
Interrupt Multiplexer Control	0x5000_0300	INT_BA
Clock Control	0x5000_0200	CLK_BA
System Global Control	0x5000_0000	GCR_BA

APB peripherals

ADC Control	0x400E_0000	ADC_BA
ACMP Control	0x400D_0000	CMP_BA
UART Control	0x4005_0000	UART_BA
PWM Control	0x4004_0000	PWM_BA
SPI Control	0x4003_0000	SPI_BA
I2C Control	0x4002_0000	I2C_BA
Timer0/Timer1 Control	0x4001_0000	TMR_BA
WDT Control	0x4000_4000	WDT_BA

Table 5.3-1 Memory Mapping Table

5.3.5 System Manager Control Registers

R: read only, **W**: write only, **R/W**: both read and write

Register	Offset	R/W	Description	Reset Value
GCR_BA = 0x5000_0000				
PDID	GCR_BA+0x00	R	Part Device Identification Number Register	0xXXXX_XXXX[1]
RSTSRC	GCR_BA+0x04	R/W	System Reset Source Register	0x0000_00XX
IPRSTC1	GCR_BA+0x08	R/W	IP Reset Control Resister 1	0x0000_0000
IPRSTC2	GCR_BA+0x0C	R/W	IP Reset Control Resister 2	0x0000_0000
BODCR	GCR_BA+0x18	R/W	Brown-out Detector Control Register	0x00XX_000X
P0_MFP	GCR_BA+0x30	R/W	P0 Multiple Function and Input Type Control Register	0x0000_0000
P1_MFP	GCR_BA+0x34	R/W	P1 Multiple Function and Input Type Control Register	0x0000_0000
P2_MFP	GCR_BA+0x38	R/W	P2 Multiple Function and Input Type Control Register	0x0000_0000
P3_MFP	GCR_BA+0x3C	R/W	P3 Multiple Function and Input Type Control Register	0x0000_0000
P4_MFP	GCR_BA+0x40	R/W	P4 Multiple Function and Input Type Control Register	0x0000_00C0
P5_MFP	GCR_BA+0x44	R/W	P5 Multiple Function and Input Type Control Register	0x0000_0000
IRCTRIMCTL	GCR_BA+0x80	R/W	HIRC Trim Control Register	0x0000_0000
IRCTRIMIEN	GCR_BA+0x84	R/W	HIRC Trim Interrupt Enable Register	0x0000_0000
IRCTRIMINT	GCR_BA+0x88	R/W	HIRC Trim Interrupt Status Register	0x0000_0000
RegLockAddr	GCR_BA+0x100	R/W	Register Lock Key Address Register	0x0000_0000

Part Device Identification Number Register (PDID)

Register	Offset	R/W	Description	Reset Value
PDID	GCR_BA+0x00	R	Part Device Identification number Register	0xXXXX_XXXX[1]

[1] Every part number has a unique default reset value.

31	30	29	28	27	26	25	24
PDID							
23	**22**	**21**	**20**	**19**	**18**	**17**	**16**
PDID							
15	**14**	**13**	**12**	**11**	**10**	**9**	**8**
PDID							
7	**6**	**5**	**4**	**3**	**2**	**1**	**0**
PDID							

Bits	Description	
[31:0]	**PDID[31:0]**	**Product Device Identification Number** This register reflects the device part number code. Software can read this register to identify which device is used. For example, the MINI51LAN PDID code is “0x00205100”.

NuMicro Mini51™ Series	Part Device Identification Number
MINI51LAN	0x00205100
MINI51ZAN	0x00205103
MINI51TAN	0x00205104
MINI52LAN	0x00205200
MINI52ZAN	0x00205203
MINI52TAN	0x00205204
MINI54LAN	0x00205400
MINI54ZAN	0x00205403
MINI54TAN	0x00205404

System Reset Source Register (RSTSRC)

This register provides specific information for software to identify the chip's reset source from the last operation.

Register	Offset	R/W	Description	Reset Value
RSTSRC	GCR_BA+0x04	R/W	System Reset Source Register	0x0000_00XX

31	30	29	28	27	26	25	24
-							
23	**22**	**21**	**20**	**19**	**18**	**17**	**16**
-							
15	**14**	**13**	**12**	**11**	**10**	**9**	**8**
-							
7	**6**	**5**	**4**	**3**	**2**	**1**	**0**
RSTS_CPU	**-**	**RSTS_MCU**	**RSTS_BOD**	**-**	**RSTS_WDT**	**RSTS_RESET**	**RSTS_POR**

Bits	Description	
[31:8]	**-**	**Reserved**
[7]	**RSTS_CPU**	The **RSTS_CPU** flag is set by hardware if software writes **CPU_RST** (IPRSTC1[1]) with "1" to reset the Cortex™-M0 CPU kernel and Flash Memory Controller (FMC). 1 = The Cortex™-M0 CPU kernel and FMC are reset by setting CPU_RST to "1". 0 = No reset from CPU. Software can write "1" to clear this bit to zero.
[6]	**-**	**Reserved**
[5]	**RSTS_MCU**	The **RSTS_MCU** flag is set by the "reset signal" from the Cortex-M0 kernel to indicate the previous reset source. 1 = The Cortex-M0 had issued the reset signal to reset the system by software writing "1" to bit SYSRESETREQ (AIRCR[2]), Application Interrupt and Reset Control Register, address = 0xE000ED0C) in system control registers of Cortex-M0 kernel. 0 = No reset from the Cortex-M0. Software can write "1" to clear this bit to zero.
[4]	**RSTS_BOD**	The **RSTS_BOD** flag is set by the "reset signal" from the Brown-out-Detected module to indicate the previous reset source. 1 = The Brown-out-Detected module had issued the reset signal to reset the system. 0 = No reset from BOD. Software can write "1" to clear this bit to zero.
[3]	**-**	**Reserved**

Bits	Description	
[2]	**RSTS_WDT**	The **RSTS_WDT** flag is set by the "reset signal" from the Watchdog module to indicate the previous reset source. 1 = The Watchdog module had issued the reset signal to reset the system. 0 = No reset from Watchdog. Software can write "1" to clear this bit to zero.
[1]	**RSTS_RESET**	The **RSTS_RESET** flag is set by the "reset signal" from the /RESET pin to indicate the previous reset source. 1 = The pin /RESET has issued the reset signal to reset the system. 0 = No reset from pin /RESET. Software can write "1" to clear this bit to zero.
[0]	**RSTS_POR**	The **RSTS_POR** flag is set by the "reset signal", which is from the Power-On Reset (POR) module or bit CHIP_RST (IPRSTC1[0]) set, to indicate the previous reset source. 1 = The Power-On-Reset (POR) or CHIP_RST=1 has issued the reset signal to reset the system. 0 = No reset from POR. Software can write "1" to clear this bit to zero.

IP Reset Control Register 1 (IPRSTC1)

Register	Offset	R/W	Description	Reset Value
IPRSTC1	GCR_BA+0x08	R/W	IP Reset Control Resister 1	0x0000_0000

31	30	29	28	27	26	25	24
-							
23	**22**	**21**	**20**	**19**	**18**	**17**	**16**
-							
15	**14**	**13**	**12**	**11**	**10**	**9**	**8**
-							
7	**6**	**5**	**4**	**3**	**2**	**1**	**0**
-						CPU_RST	CHIP_RST

Bits	Description	
[31:2]	-	**Reserved**
[1]	**CPU_RST**	**CPU Kernel One Shot Reset** Setting this bit will reset the CPU kernel, and this bit will automatically return to “0” after the 2 clock cycles. **This bit is the protected bit,** programming this needs an open lock sequence, write 0x59, 0x16, 0x88 to address 0x5000_0100 to un-lock this bit. Refer to the register **RegLockAddr** at address GCR_BA + 0x100. 1 = Reset CPU. 0 = Normal.
[0]	**CHIP_RST**	**CHIP One Shot Reset** Setting this bit will reset the CHIP, including CPU kernel and all peripherals, and this bit will automatically return to “0” after the 2 clock cycles. The CHIP_RST is the same as the POR reset, and all the chip module is reset and the chip settings from flash are also reload. **This bit is the protected bit,** and programming this needs an open lock sequence, write 0x59, 0x16, 0x88 to address 0x5000_0100 to un-lock this bit. Refer to the register **RegLockAddr** at address GCR_BA + 0x100. 1 = Reset CHIP. 0 = Normal.

IP Reset Control Register 2 (IPRSTC2)

Setting the bit "1" will generate the asynchronous reset signal to the corresponding IP. User needs to set the bit to "0" to release IP from the reset state.

Register	Offset	R/W	Description	Reset Value
IPRSTC2	GCR_BA+0x0C	R/W	IP Reset Control Resister 2	0x0000_0000

31	30	29	28	27	26	25	24
-			ADC_RST	-			
23	**22**	**21**	**20**	**19**	**18**	**17**	**16**
-	ACMP_RST	-	PWM_RST	-			UART_RST
15	**14**	**13**	**12**	**11**	**10**	**9**	**8**
-			SPI_RST	-			I2C_RST
7	**6**	**5**	**4**	**3**	**2**	**1**	**0**
-				TMR1_RST	TMR0_RST	GPIO_RST	-

Bits	Description	
[31:29]	-	**Reserved**
[28]	**ADC_RST**	**ADC Controller Reset** 1 = ADC block reset. 0 = ADC block normal operation.
[27:23]	-	**Reserved**
[22]	**ACMP_RST**	**ACMP Controller Reset** 1 = ACMP block reset. 0 = ACMP block normal operation.
[21]	-	**Reserved**
[20]	**PWM_RST**	**PWM Controller Reset** 1 = PWM block reset. 0 = PWM block normal operation.
[19:17]	-	**Reserved**
[16]	**UART_RST**	**UART Controller Reset** 1 = UART block reset. 0 = UART Normal operation.
[15:13]	-	**Reserved**
[12]	**SPI_ RST**	**SPI Controller Reset** 1 = SPI block reset. 0 = SPI block normal operation.

Bits	Description	
[11:9]	-	**Reserved**
[8]	**I2C _RST**	**I^2C Controller Reset** 1 = I^2C block reset. 0 = I^2C normal operation.
[7:4]	-	**Reserved**
[3]	**TMR1_RST**	**Timer1 Controller Reset** 1 = Timer1 block reset. 0 = Timer1 normal operation.
[2]	**TMR0_RST**	**Timer0 Controller Reset** 1 = Timer0 block reset. 0 = Timer0 normal operation.
[1]	**GPIO_RST**	**GPIO (P0~P5) Controller Reset** 1 = GPIO reset. 0 = GPIO normal operation.
[0]	-	**Reserved**

Brown-out Detector Control Register (BODCR)

Partial of the BODCR control register values are initiated by the flash configuration and writeprotected by the lock function. If user needs to program the write-protected content, an unlocked sequence is needed. The unlocked sequence is to continuously write the data 0x59, 0x16, 0x88 to the key controller address 0x5000_0100. A different data value or any other write during the three data programs aborts the whole sequence.

After the unlocked sequence, user can check the lock bit at address 0x5000_0100 bit 0, where "1" is unlocked and "0" is locked. Then user can update the write-protected registers. Write any data to the address 0x5000_0100 to re-lock the write-protected register again.

Register	Offset	R/W	Description	Reset Value
BODCR	GCR_BA+0x18	R/W	Brown-out Detector Control Register	0x00XX_000X

31	30	29	28	27	26	25	24
-							
23	**22**	**21**	**20**	**19**	**18**	**17**	**16**
-							
15	**14**	**13**	**12**	**11**	**10**	**9**	**8**
-							
7	**6**	**5**	**4**	**3**	**2**	**1**	**0**
-	BOD_OUT	-	BOD_INTF	BOD_RSTEN	BOD_VL		-

Bits	Description	
[31:7]	-	**Reserved**
[6]	**BOD_OUT**	**The status for Brown-out Detector output state** 1 = Brown-out Detector status output is "1", the detected voltage is lower than BOD_VL setting. 0 = Brown-out Detector status output is "0", the detected voltage is higher than BOD_VL setting.
[5]	-	**Reserved**
[4]	**BOD_INTF**	**Brown-out Detector Interrupt Flag** 1 = When Brown-out Detector detects the VDD is dropped through the voltage of BOD_VL setting or the VDD is raised up through the voltage of BOD_VL setting, this bit is set to "1" and the Brown-out interrupt is requested if Brown-out interrupt is enabled. 0 = Brown-out Detector does not detect any voltage draft at VDD down through or up through the voltage of BOD_VL setting.

Bits	Description	
[3]	**BOD_RSTEN**	**Brown-out Reset Enable (Initiated and Write-protected bit)** 1 = Brown-out "RESET" function Enabled; when the Brown-out Detector function is enable and the detected voltage is lower than the threshold then assert a signal to reset the chip. The default value is set by flash controller user configuration register config0 bit[20]. 0 = Brown-out "INTERRUPT" function Enabled; when the Brown-out Detector function is enabled and the detected voltage is lower than the threshold, then assert a signal to interrupt the Cortex™-M0 CPU. When the BOD_EN is enabled and the interrupt is asserted, the interrupt will be kept till the BOD_EN is set to "0". The interrupt for CPU can be blocked by disabling the NVIC in CPU for BOD interrupt or disable the interrupt source by disabling the BOD_EN and then re-enabling the BOD_EN function if the BOD function is required.
[2:1]	**BOD_VL[1:0]**	**Brown-out Detector Threshold Voltage Selection (initiated and write-protected bit)** The default value is set by flash controller user configuration register config0 bit[22:21].

BOD_VL[1]	BOD_VL[0]	Brown-out voltage
1	1	Disable 2.7V and 3.8V
1	0	3.8V
0	1	2.7V
0	0	Reserved

[0]	**-**	**Reserved**

Multiple Function Port0 Control Register (P0_MFP)

Register	Offset	R/W	Description	Reset Value
P0_MFP	GCR_BA+0x30	R/W	P0 Multiple Function and Input Type Control Register	0x0000_0000

31	30	29	28	27	26	25	24
-							
23	**22**	**21**	**20**	**19**	**18**	**17**	**16**
P0_TYPE							
15	**14**	**13**	**12**	**11**	**10**	**9**	**8**
P0_ALT							
7	**6**	**5**	**4**	**3**	**2**	**1**	**0**
P0_MFP							

Bits	Description	
[31:24]	**-**	**Reserved**
[23:16]	**P0_TYPE[n]**	**P0[7:0] input Schmitt Trigger function Enable** 1 = P0[7:0] I/O input Schmitt Trigger function Enabled. 0 = P0[7:0] I/O input Schmitt Trigger function Disabled.
[15]	**P0_ ALT[7]**	**P0.7 Alternate Function Selection** The pin function of P0.7 depends on P0_MFP[7] and P0_ALT[7]. P0_ALT[7] / P0_MFP[7] / P0.7 function 0 / 0 / P0.7 0 / 1 / Reserved 1 / 0 / SPICLK (SPI) 1 / 1 / Reserved
[14]	**P0_ ALT[6]**	**P0.6 Alternate Function Selection** The pin function of P0.6 depends on P0_MFP[6] and P0_ALT[6]. P0_ALT[6] / P0_MFP[6] / P0.6 function 0 / 0 / P0.6 0 / 1 / Reserved 1 / 0 / MISO (SPI) 1 / 1 / Reserved

<table>
<tr><th>Bits</th><th>Description</th><th></th></tr>
<tr><td>[13]</td><td>P0_ ALT[5]</td><td>P0.5 Alternate Function Selection
The pin function of P0.5 depends on P0_MFP[5] and P0_ALT[5].
<table>
<tr><th>P0_ALT[5]</th><th>P0_MFP[5]</th><th>P0.5 function</th></tr>
<tr><td>0</td><td>0</td><td>P0.5</td></tr>
<tr><td>0</td><td>1</td><td>Reserved</td></tr>
<tr><td>1</td><td>0</td><td>MOSI (SPI)</td></tr>
<tr><td>1</td><td>1</td><td>Reserved</td></tr>
</table></td></tr>
<tr><td>[12]</td><td>P0_ ALT[4]</td><td>P0.4 Alternate Function Selection
The pin function of P0.4 depends on P0_MFP[4] and P0_ALT[4].
<table>
<tr><th>P0_ALT[4]</th><th>P0_MFP[4]</th><th>P0.4 function</th></tr>
<tr><td>0</td><td>0</td><td>P0.4</td></tr>
<tr><td>0</td><td>1</td><td>Reserved</td></tr>
<tr><td>1</td><td>0</td><td>SPISS (SPI)</td></tr>
<tr><td>1</td><td>1</td><td>PWM5 (PWM)</td></tr>
</table></td></tr>
<tr><td>[11:10]</td><td>-</td><td>Reserved</td></tr>
<tr><td>[9]</td><td>P0_ ALT[1]</td><td>P0.1 Alternate Function Selection
The pin function of P0.1 depends on P0_MFP[1] and P0_ALT[1].
<table>
<tr><th>P0_ALT[1]</th><th>P0_MFP[1]</th><th>P0.1 function</th></tr>
<tr><td>0</td><td>0</td><td>P0.1</td></tr>
<tr><td>0</td><td>1</td><td>SPISS (SPI)</td></tr>
<tr><td>1</td><td>0</td><td>RTSn (UART)</td></tr>
<tr><td>1</td><td>1</td><td>RX (UART)</td></tr>
</table></td></tr>
<tr><td>[8]</td><td>P0_ ALT[0]</td><td>P0.0 Alternate Function Selection
The pin function of P0.0 depends on P0_MFP[0] and P0_ALT[0].
<table>
<tr><th>P0_ALT[0]</th><th>P0_MFP[0]</th><th>P0.0 function</th></tr>
<tr><td>0</td><td>0</td><td>P0.0</td></tr>
<tr><td>0</td><td>1</td><td>Reserved</td></tr>
<tr><td>1</td><td>0</td><td>CTSn (UART)</td></tr>
<tr><td>1</td><td>1</td><td>TX (UART)</td></tr>
</table></td></tr>
<tr><td>[7:0]</td><td>P0_MFP[7:0]</td><td>P0 Multiple Function Selection
The pin function of P0 depends on P0_MFP and P0_ALT.
Refer to P0_ALT Description for details.</td></tr>
</table>

Multiple Function Port1 Control Register (P1_MFP)

Register	Offset	R/W	Description	Reset Value
P1_MFP	GCR_BA+0x34	R/W	P1 Multiple Function and Input Type Control Register	0x0000_0000

31	30	29	28	27	26	25	24
-							
23	**22**	**21**	**20**	**19**	**18**	**17**	**16**
P1_TYPE							
15	**14**	**13**	**12**	**11**	**10**	**9**	**8**
P1_ALT							
7	**6**	**5**	**4**	**3**	**2**	**1**	**0**
P1_MFP							

Bits	Description	
[31:24]	-	**Reserved**
[23:16]	**P1_TYPE[n]**	**P1[7:0] input Schmitt Trigger function Enable** 1 = P1[7:0] I/O input Schmitt Trigger function enable. 0 = P1[7:0] I/O input Schmitt Trigger function disable.
[15:14]	-	**Reserved**
[13]	**P1_ ALT[5]**	**P1.5 Alternate Function Selection** The pin function of P1.5 depends on P1_MFP[5] and P1_ALT[5].

P1_ALT[5]	P1_MFP[5]	P1.5 function
0	0	P1.5
0	1	AIN5 (ADC)
1	0	Reserved
1	1	CPP0 (CMP)

Bits	Description	
[12]	**P1_ ALT[4]**	**P1.4 Alternate Function Selection** The pin function of P1.4 depends on P1_MFP[4] and P1_ALT[4].

P1_ALT[4]	P1_MFP[4]	P1.4 function
0	0	P1.4
0	1	AIN4 (ADC)
1	0	Reserved
1	1	CPN0 (CMP)

<table>
<tr><th>Bits</th><th>Description</th><th></th></tr>
<tr><td>[11]</td><td>P1_ ALT[3]</td><td>P1.3 Alternate Function Selection
The pin function of P1.3 depends on P1_MFP[3] and P1_ALT[3].
<table>
<tr><th>P1_ALT[3]</th><th>P1_MFP[3]</th><th>P1.3 function</th></tr>
<tr><td>0</td><td>0</td><td>P1.3</td></tr>
<tr><td>0</td><td>1</td><td>AIN3 (ADC)</td></tr>
<tr><td>1</td><td>0</td><td>TX (UART)</td></tr>
<tr><td>1</td><td>1</td><td>Reserved</td></tr>
</table></td></tr>
<tr><td>[10]</td><td>P1_ ALT[2]</td><td>P1.2 Alternate Function Selection
The pin function of P1.2 depends on P1_MFP[2] and P1_ALT[2].
<table>
<tr><th>P1_ALT[2]</th><th>P1_MFP[2]</th><th>P1.2 function</th></tr>
<tr><td>0</td><td>0</td><td>P1.2</td></tr>
<tr><td>0</td><td>1</td><td>AIN2 (ADC)</td></tr>
<tr><td>1</td><td>0</td><td>RX (UART)</td></tr>
<tr><td>1</td><td>1</td><td>Reserved</td></tr>
</table></td></tr>
<tr><td>[9]</td><td>-</td><td>Reserved</td></tr>
<tr><td>[8]</td><td>P1_ ALT[0]</td><td>P1.0 Alternate Function Selection
The pin function of P1.0 depends on P1_MFP[0] and P1_ALT[0].
<table>
<tr><th>P1_ALT[0]</th><th>P1_MFP[0]</th><th>P1.0 function</th></tr>
<tr><td>0</td><td>0</td><td>P1.0</td></tr>
<tr><td>0</td><td>1</td><td>AIN1 (ADC)</td></tr>
<tr><td>1</td><td>0</td><td>Reserved</td></tr>
<tr><td>1</td><td>1</td><td>Reserved</td></tr>
</table></td></tr>
<tr><td>[7:0]</td><td>P1_MFP[7:0]</td><td>P1 Multiple Function Selection
The pin function of P1 depends on P1_MFP and P1_ALT.
Refer to P1_ALT Description for details.</td></tr>
</table>

Multiple Function Port2 Control Register (P2_MFP)

Register	Offset	R/W	Description	Reset Value
P2_MFP	GCR_BA+0x38	R/W	P2 Multiple Function and Input Type Control Register	0x0000_0000

31	30	29	28	27	26	25	24
-							
23	**22**	**21**	**20**	**19**	**18**	**17**	**16**
P2_TYPE							
15	**14**	**13**	**12**	**11**	**10**	**9**	**8**
P2_ALT							
7	**6**	**5**	**4**	**3**	**2**	**1**	**0**
P2_MFP							

Bits	Description	
[31:24]	-	**Reserved**
[23:16]	**P2_TYPE[n]**	**P2[7:0] input Schmitt Trigger function Enable** 1 = P2[7:0] I/O input Schmitt Trigger function Enabled. 0 = P2[7:0] I/O input Schmitt Trigger function Disabled.
[15]	-	**Reserved**
[14]	**P2_ ALT[6]**	**P2.6 Alternate Function Selection** The pin function of P2.6 depends on P2_MFP[6] and P2_ALT[6].

P2_ALT[6]	P2_MFP[6]	P2.6 function
0	0	P2.6
0	1	Reserved
1	0	PWM4 (PWM)
1	1	CPO1

Bits	Description	
[13]	**P2_ ALT[5]**	**P2.5 Alternate Function Selection** The pin function of P2.5 depends on P2_MFP[5] and P2_ALT[5].

P2_ALT[5]	P2_MFP[5]	P2.5 function
0	0	P2.5
0	1	Reserved
1	0	PWM3 (PWM)
1	1	Reserved

<table>
<tr><th>Bits</th><th>Description</th><th></th></tr>
<tr><td>[12]</td><td>P2_ ALT[4]</td><td>P2.4 Alternate Function Selection
The pin function of P2.4 depends on P2_MFP[4] and P2_ALT[4].
<table>
<tr><th>P2_ALT[4]</th><th>P2_MFP[4]</th><th>P2.4 function</th></tr>
<tr><td>0</td><td>0</td><td>P2.4</td></tr>
<tr><td>0</td><td>1</td><td>Reserved</td></tr>
<tr><td>1</td><td>0</td><td>PWM2 (PWM)</td></tr>
<tr><td>1</td><td>1</td><td>Reserved</td></tr>
</table></td></tr>
<tr><td>[11]</td><td>P2_ ALT[3]</td><td>P2.3 Alternate Function Selection
The pin function of P2.3 depends on P2_MFP[3] and P2_ALT[3].
<table>
<tr><th>P2_ALT[3]</th><th>P2_MFP[3]</th><th>P2.3 function</th></tr>
<tr><td>0</td><td>0</td><td>P2.3</td></tr>
<tr><td>0</td><td>1</td><td>Reserved</td></tr>
<tr><td>1</td><td>0</td><td>PWM1 (PWM)</td></tr>
<tr><td>1</td><td>1</td><td>Reserved</td></tr>
</table></td></tr>
<tr><td>[10]</td><td>P2_ ALT[2]</td><td>P2.2 Alternate Function Selection
The pin function of P2.2 depends on P2_MFP[2] and P2_ALT[2].
<table>
<tr><th>P2_ALT[2]</th><th>P2_MFP[2]</th><th>P2.2 function</th></tr>
<tr><td>0</td><td>0</td><td>P2.2</td></tr>
<tr><td>0</td><td>1</td><td>Reserved</td></tr>
<tr><td>1</td><td>0</td><td>PWM0 (PWM)</td></tr>
<tr><td>1</td><td>1</td><td>Reserved</td></tr>
</table></td></tr>
<tr><td>[9:8]</td><td>-</td><td>Reserved</td></tr>
<tr><td>[7:0]</td><td>P2_MFP[7:0]</td><td>P2 Multiple Function Selection
The pin function of P2 depends on P2_MFP and P2_ALT.
Refer to P2_ALT Description for details.</td></tr>
</table>

Multiple Function Port3 Control Register (P3_MFP)

Register	Offset	R/W	Description	Reset Value
P3_MFP	GCR_BA+0x3C	R/W	P3 Multiple Function and Input Type Control Register	0x0000_0000

31	30	29	28	27	26	25	24
-							
23	**22**	**21**	**20**	**19**	**18**	**17**	**16**
P3_TYPE							
15	**14**	**13**	**12**	**11**	**10**	**9**	**8**
P3_ALT							
7	**6**	**5**	**4**	**3**	**2**	**1**	**0**
P3_MFP							

Bits	Description	
[31:24]	-	**Reserved**
[23:16]	**P3_TYPE[n]**	**P3[7:0] input Schmitt Trigger function Enable** 1 = P3[7:0] I/O input Schmitt Trigger function Enabled. 0 = P3[7:0] I/O input Schmitt Trigger function Disabled.
[15]	-	**Reserved**
[14]	**P3_ ALT[6]**	**P3.6 Alternate Function Selection** The pin function of P3.6 depends on P3_MFP[6] and P3_ALT[6].

P3_ALT[6]	P3_MFP[6]	P3.6 function
0	0	P3.6
0	1	T1EX
1	0	CKO (Clock Driver output)
1	1	CPO0 (CMP)

[13]	**P3_ ALT[5]**	**P3.5 Alternate Function Selection** The pin function of P3.5 depends on P3_MFP[5] and P3_ALT[5].

P3_ALT[5]	P3_MFP[5]	P3.5 function
0	0	P3.5
0	1	T1 (Timer1)
1	0	SCL (I^2C)
1	1	Reserved

<table>
<tr><th>Bits</th><th>Description</th><th></th></tr>
<tr><td>[12]</td><td>P3_ ALT[4]</td><td>P3.4 Alternate Function Selection
The pin function of P3.4 depends on P3_MFP[4] and P3_ALT[4].
<table>
<tr><th>P3_ALT[4]</th><th>P3_MFP[4]</th><th>P3.4 function</th></tr>
<tr><td>0</td><td>0</td><td>P3.4</td></tr>
<tr><td>0</td><td>1</td><td>T0 (Timer0)</td></tr>
<tr><td>1</td><td>0</td><td>SDA (I^2C)</td></tr>
<tr><td>1</td><td>1</td><td>Reserved</td></tr>
</table></td></tr>
<tr><td>[11]</td><td>-</td><td>Reserved</td></tr>
<tr><td>[10]</td><td>P3_ ALT[2]</td><td>P3.2 Alternate Function Selection
The pin function of P3.2 depends on P3_MFP[2] and P3_ALT[2].
<table>
<tr><th>P3_ALT[2]</th><th>P3_MFP[2]</th><th>P3.2 function</th></tr>
<tr><td>0</td><td>0</td><td>P3.2</td></tr>
<tr><td>0</td><td>1</td><td>INT0</td></tr>
<tr><td>1</td><td>0</td><td>T0EX</td></tr>
<tr><td>1</td><td>1</td><td>STADC (ADC)</td></tr>
</table></td></tr>
<tr><td>[9]</td><td>P3_ ALT[1]</td><td>P3.1 Alternate Function Selection
The pin function of P3.1 depends on P3_MFP[1] and P3_ALT[1].
<table>
<tr><th>P3_ALT[1]</th><th>P3_MFP[1]</th><th>P3.1 function</th></tr>
<tr><td>0</td><td>0</td><td>P3.1</td></tr>
<tr><td>0</td><td>1</td><td>Reserved</td></tr>
<tr><td>1</td><td>0</td><td>CPP1</td></tr>
<tr><td>1</td><td>1</td><td>AIN7 (ADC)</td></tr>
</table></td></tr>
<tr><td>[8]</td><td>P3_ ALT[0]</td><td>P3.0 Alternate Function Selection
The pin function of P3.0 depends on P3_MFP[0] and P3_ALT[0].
<table>
<tr><th>P3_ALT[0]</th><th>P3_MFP[0]</th><th>P3.0 function</th></tr>
<tr><td>0</td><td>0</td><td>P3.0</td></tr>
<tr><td>0</td><td>1</td><td>Reserved</td></tr>
<tr><td>1</td><td>0</td><td>CPN1</td></tr>
<tr><td>1</td><td>1</td><td>AIN6 (ADC)</td></tr>
</table></td></tr>
<tr><td>[7:0]</td><td>P3_MFP[7:0]</td><td>P3 Multiple Function Selection
The pin function of P3 depends on P3_MFP and P3_ALT.
Refer to P3_ALT Description for details.</td></tr>
</table>

Multiple Function Port4 Control Register (P4_MFP)

Register	Offset	R/W	Description	Reset Value
P4_MFP	GCR_BA+0x40	R/W	P4 Multiple Function and Input Type Control Register	0x0000_00C0

31	30	29	28	27	26	25	24
-							
23	**22**	**21**	**20**	**19**	**18**	**17**	**16**
P4_TYPE							
15	**14**	**13**	**12**	**11**	**10**	**9**	**8**
P4_ALT							
7	**6**	**5**	**4**	**3**	**2**	**1**	**0**
P4_MFP							

Bits	Description	
[31:24]	**-**	**Reserved**
[23:16]	**P4_TYPE[n]**	**P4[7:0] input Schmitt Trigger function Enable** 1 = P4[7:0] I/O input Schmitt Trigger function Enabled. 0 = P4[7:0] I/O input Schmitt Trigger function Disabled.
[15]	**P4_ ALT[7]**	**P4.7 Alternate Function Selection** The pin function of P4.7 depends on P4_MFP[7] and P4_ALT[7]. P4_ALT[7] / P4_MFP[7] / P4.7 function 0 / 0 / P4.7 0 / 1 / ICE_DAT (ICE) 1 / x / Reserved
[14]	**P4_ ALT[6]**	**P4.6 Alternate Function Selection** The pin function of P4.6 depends on P4_MFP[6] and P4_ALT[6]. P4_ALT[6] / P4_MFP[6] / P4.6 function 0 / 0 / P4.6 0 / 1 / ICE_CLK (ICE) 1 / x / Reserved
[13:8]	**-**	**Reserved**
[7:0]	**P4_MFP[7:0]**	**P4 Multiple Function Selection** The pin function of P4 depends on P4_MFP and P4_ALT. Refer to P4_ALT Description for details.

Multiple Function Port5 Control Register (P5_MFP)

Register	Offset	R/W	Description	Reset Value
P5_MFP	GCR_BA+0x44	R/W	P5 Multiple Function and Input Type Control Register	0x0000_0000

31	30	29	28	27	26	25	24
-							
23	**22**	**21**	**20**	**19**	**18**	**17**	**16**
P5_TYPE							
15	**14**	**13**	**12**	**11**	**10**	**9**	**8**
P5_ALT							
7	**6**	**5**	**4**	**3**	**2**	**1**	**0**
P5_MFP							

Bits	Description	
[31:24]	**-**	**Reserved**
[23:16]	**P5_TYPE[n]**	**P5[7:0] input Schmitt Trigger function Enable** 1 = P5[7:0] I/O input Schmitt Trigger function Enabled. 0 = P5[7:0] I/O input Schmitt Trigger function Disabled.
[15:14]	**-**	**Reserved**
[13]	**P5_ ALT[5]**	**P5.5 Alternate Function Selection** The pin function of P5.5 depends on P5_MFP[5] and P5_ALT[5]. P5_ALT[5] / P5_MFP[5] / P5.5 function 0 / 0 / P5.5 0 / 1 / Reserved 1 / x / Reserved
[12]	**P5_ ALT[4]**	**P5.4 Alternate Function Selection** The pin function of P5.4 depends on P5_MFP[4] and P5_ALT[4]. P5_ALT[4] / P5_MFP[4] / P5.4 function 0 / 0 / P5.4 0 / 1 / Reserved 1 / x / Reserved

<table>
<tr><th>Bits</th><th>Description</th><th></th></tr>
<tr><td>[11]</td><td>P5_ ALT[3]</td><td>P5.3 Alternate Function Selection
The pin function of P5.3 depends on P5_MFP[3] and P5_ALT[3].
<table>
<tr><th>P5_ALT[3]</th><th>P5_MFP[3]</th><th>P5.3 function</th></tr>
<tr><td>0</td><td>0</td><td>P5.3</td></tr>
<tr><td>0</td><td>1</td><td>AIN0 (ADC)</td></tr>
<tr><td>1</td><td>x</td><td>Reserved</td></tr>
</table></td></tr>
<tr><td>[10]</td><td>P5_ ALT[2]</td><td>P5.2 Alternate Function Selection
The pin function of P5.2 depends on P5_MFP[2] and P5_ALT[2].
<table>
<tr><th>P5_ALT[2]</th><th>P5_MFP[2]</th><th>P5.2 function</th></tr>
<tr><td>0</td><td>0</td><td>P5.2</td></tr>
<tr><td>0</td><td>1</td><td>INT1</td></tr>
<tr><td>1</td><td>x</td><td>Reserved</td></tr>
</table></td></tr>
<tr><td>[9]</td><td>P5_ ALT[1]</td><td>P5.1 Alternate Function Selection
The pin function of P5.1 depends on P5_MFP[1] and P5_ALT[1].
<table>
<tr><th>P5_ALT[1]</th><th>P5_MFP[1]</th><th>P5.1 function</th></tr>
<tr><td>0</td><td>0</td><td>P5.1</td></tr>
<tr><td>0</td><td>1</td><td>XTAL2</td></tr>
<tr><td>1</td><td>x</td><td>Reserved</td></tr>
</table>
Note: To enable external XTAL function, the PWRCON bit [1:0] (XTLCLK_EN), External 12 MHz or 32 KHz Crystal Oscillator Control register must also be set.</td></tr>
<tr><td>[8]</td><td>P5_ ALT[0]</td><td>P5.0 Alternate Function Selection
The pin function of P5.0 depends on P5_MFP[0] and P5_ALT[0].
<table>
<tr><th>P5_ALT[0]</th><th>P5_MFP[0]</th><th>P5.0 function</th></tr>
<tr><td>0</td><td>0</td><td>P5.0</td></tr>
<tr><td>0</td><td>1</td><td>XTAL1</td></tr>
<tr><td>1</td><td>x</td><td>Reserved</td></tr>
</table>
Note: To enable external XTAL function, the PWRCON bit [1:0] (XTLCLK_EN), External 12 MHz or 32 KHz Crystal Oscillator Control register must also be set.</td></tr>
<tr><td>[7:0]</td><td>P5_MFP[7:0]</td><td>P5 Multiple Function Selection
The pin function of P5 depends on P5_MFP and P5_ALT.
Refer to P5_ALT Description for details.</td></tr>
</table>

HFIRC Trim Control Register (IRCTRIMCTL)

Register	Offset	R/W	Description	Reset Value
IRCTRIMCTL	GCR_BA+0x80	R/W	HIRC Trim Control Register	0x0000_0000

31	30	29	28	27	26	25	24
-							
23	**22**	**21**	**20**	**19**	**18**	**17**	**16**
-							
15	**14**	**13**	**12**	**11**	**10**	**9**	**8**
-							
7	**6**	**5**	**4**	**3**	**2**	**1**	**0**
Reserved		**TRIM_LOOP**		**-**			**TRIM_SEL**

Bits	Description	
[31:8]	**-**	**Reserved**
[7:6]	**-**	**Reserved. Keep the default value "00".**
[5:4]	**TRIM_LOOP[1:0]**	**Trim Calculation Loop** This field defines trim value calculation based on the number of 32.768 KHz clock. For example, if TRIM_LOOP is set as "00", auto trim circuit will calculate trim value based on the average frequency difference in 4 32.768 KHz clock. This field also defines how many times the auto trim circuit will try to update the HFIRC trim value before the frequency of HFIRC is locked. Once the HFIRC is locked, the internal trim value update counter will be reset. If the trim value update counter reaches this limitation value and frequency of HFIRC is still not locked, the auto trim operation will be disabled and TRIM_SEL will be cleared to "0". 00 = Trim value calculation is based on average difference in 4 32.768 KHz clock and trim retry count limitation is 64. 01 = Trim value calculation is based on average difference in 8 32.768 KHz clock and trim retry count limitation is 128. 10 = Trim value calculation is based on average difference in 16 32.768 KHz clock and trim retry count limitation is 256. 11 = Trim value calculation is based on average difference in 32 32.768 KHz clock and trim retry count limitation is 512.
[3:1]	**-**	**Reserved**

Bits	Description	
[0]	**TRIM_SEL**	**Trim Frequency Selection** This bit is to enable the HFIRC auto trim. When setting this bit to “1”, the HFIRC auto trim function will trim HFIRC to 22 MHz automatically based on the 32.768 KHz reference clock. During auto trim operation, if 32.768 KHz clock error is detected or trim retry limitation count reached, this field will be cleared to “0” automatically. 0 = HFIRC auto trim function Disabled. 1 = HFIRC auto trim function Enabled and HFIRC trimmed to 22 MHz.

HFIRC Trim Interrupt Enable Register (IRCTRIMIEN)

Register	Offset	R/W	Description	Reset Value
IRCTRIMIEN	GCR_BA+0x84	R/W	HIRC Trim Interrupt Enable Register	0x0000_0000

31	30	29	28	27	26	25	24
-							
23	**22**	**21**	**20**	**19**	**18**	**17**	**16**
-							
15	**14**	**13**	**12**	**11**	**10**	**9**	**8**
-							
7	**6**	**5**	**4**	**3**	**2**	**1**	**0**
-					**32K_ERR_IEN**	**TRIM_FAIL_IEN**	-

Bits	Description	
[31:3]	-	**Reserved**
[2]	**32K_ERR_IEN**	**32.768 KHz Clock Error Interrupt Enable** This bit controls if CPU could get an interrupt while 32.768 KHz clock is inaccurate during auto trim operation. If this bit is high, and 32K_ERR_INT is set during auto trim operation, an interrupt will be triggered to notify the 32.768 KHz clock frequency is inaccurate. 0 = 32K_ERR_INT status Disabled to trigger an interrupt to CPU. 1 = 32K_ERR_INT status Enabled to trigger an interrupt to CPU.
[1]	**TRIM_FAIL_IEN**	**Trim Failure Interrupt Enable** This bit controls if an interrupt will be triggered while HFIRC trim value update limitation count is reached and HFIRC frequency is still not locked on target frequency set by TRIM_SEL. If this bit is high and TRIM_FAIL_INT is set during auto trim operation, an interrupt will be triggered to notify that HFIRC trim value update limitation count is reached. 0 = TRIM_FAIL_INT status Disabled to trigger an interrupt to CPU. 1 = TRIM_FAIL_INT status Enabled to trigger an interrupt to CPU.
[0]	-	**Reserved**

HFIRC Trim Interrupt Status Register (IRCTRIMINT)

Register	Offset	R/W	Description	Reset Value
IRCTRIMINT	GCR_BA+0x88	R/W	HIRC Trim Interrupt Status Register	0x0000_0000

31	30	29	28	27	26	25	24
-							
23	**22**	**21**	**20**	**19**	**18**	**17**	**16**
-							
15	**14**	**13**	**12**	**11**	**10**	**9**	**8**
-							
7	**6**	**5**	**4**	**3**	**2**	**1**	**0**
-					**32K_ERR_INT**	**TRIM_FAIL_INT**	**FREQ_LOCK**

Bits	Description	
[31:3]	**-**	**Reserved**
[2]	**32K_ERR_INT**	**32.768 KHz Clock Error Interrupt Status** This bit indicates that 32.768 KHz clock frequency is inaccuracy. Once this bit is set, the auto trim operation stopped and TRIM_SEL will be cleared to “0” by hardware automatically. If this bit is set and 32K_ERR_IEN is high, an interrupt will be triggered to notify the 32.768 KHz clock frequency is inaccuracy. Write “1” to clear this to zero. 0 = 32.768 KHz clock frequency is accuracy. 1 = 32.768 KHz clock frequency is inaccuracy.
[1]	**TRIM_FAIL_INT**	**Trim Failure Interrupt Status** This bit indicates that HFIRC trim value update limitation count reached and HIRC clock frequency still doesn’t lock. Once this bit is set, the auto trim operation stopped and TRIM_SEL will be cleared to “0” by hardware automatically. If this bit is set and TRIM_FAIL_IEN is high, an interrupt will be triggered to notify that HFIRC trim value update limitation count was reached. Write “1” to clear this to zero. 0 = Trim value update limitation count is not reached. 1 = Trim value update limitation count is reached and HFIRC frequency is still not locked.
[0]	**FREQ_LOCK**	**HIRC Frequency Lock Status** This bit indicates the HIRC frequency lock. This is a status bit and doesn’t trigger any interrupt.

Register Lock Key Address Register (RegLockAddr)

Some of the system control registers need to be protected to avoid inadvertent write and disturb the chip operation. These system control registers are locked after the power on reset until user opens the lock. For user who programs these protected registers, an open lock sequence needs to follow. The Open sequence is to continue write the data 0x59, 0x16, 0x88 to the key controller address 0x5000_0100. Any different data value or different sequence or any other write to any other address during these three data program abort the whole sequence.

After the lock is open, user can check the lock bit at address 0x5000_0100 bit 0, where "1" is unlocked, "0" is locked. Then user can update the target register value and then write any data to the address 0x5000_0100 to re-lock the protected registers.

This register is written to open the RegUnLock key and read for the RegUnLock status.

Register	Offset	R/W	Description	Reset Value
RegLockAddr	GCR_BA+0x100	R/W	Register Lock Key Address Register	0x0000_0000

31	30	29	28	27	26	25	24
-							
23	**22**	**21**	**20**	**19**	**18**	**17**	**16**
-							
15	**14**	**13**	**12**	**11**	**10**	**9**	**8**
-							
7	**6**	**5**	**4**	**3**	**2**	**1**	**-0**
-							**RegUnLock**

Bits	Description	
[31:1]	**-**	**Reserved**
[0]	**RegUnLock**	1 = Protected registers are Unlock. 0 = Protected registers are locked. Any write to the target register is ignored. The Protected registers are: IPRSTC1 – address 0x5000_0008 (IP reset control register 1) BODCR – address 0x5000_0018 (Brown-out detector control register) PORCR – address 0x5000_0024 (Power-On-Reset control register) PWRCON – address 0x5000_0200 (bit[6] is not protected for power wake-up interrupt clear) APBCLK[0] – address 0x5000_0208 (Watchdog clock enable) CLKSEL0 – address 0x5000_0210 (HCLK and CPU STCLK clock source select) CLKSEL1[1:0] – address 0x5000_0214 (Watchdog clock source select) NMI_SEL[8] – address 0x5000_380 (NMI interrupt source enable) ISPCON – address 0x5000_C000 (Flash ISP control register) WTCR – address 0x4000_4000 (Watchdog Timer control register)

5.4 Clock Controller

5.4.1 Overview

The clock controller generates the clocks for the whole chip, including system clocks and all peripheral clocks. The clock controller also implements the power control function with the individually clock ON/OFF control, clock source selection and a 4-bit clock divider. The chip will not enter Power-down mode until CPU sets the power-down enable bit (PWR_DOWN_EN) and Cortex-M0 core executes the WFI instruction. After that, the chip enters Power-down mode and wait for wake-up interrupt source triggered to leave Power-down mode. In Power-down mode, the clock controller turns off the external crystal and internal 22.1184 MHz oscillator to reduce the overall system power consumption.

5.4.2 Clock Generator

The clock generator consists of 3 sources which are listed below:

- One external 12 MHz (HXT) or 32 KHz (LXT) crystal
- One internal 22.1184 MHz RC oscillator (HIRC)
- One internal 10 KHz oscillator (LIRC)

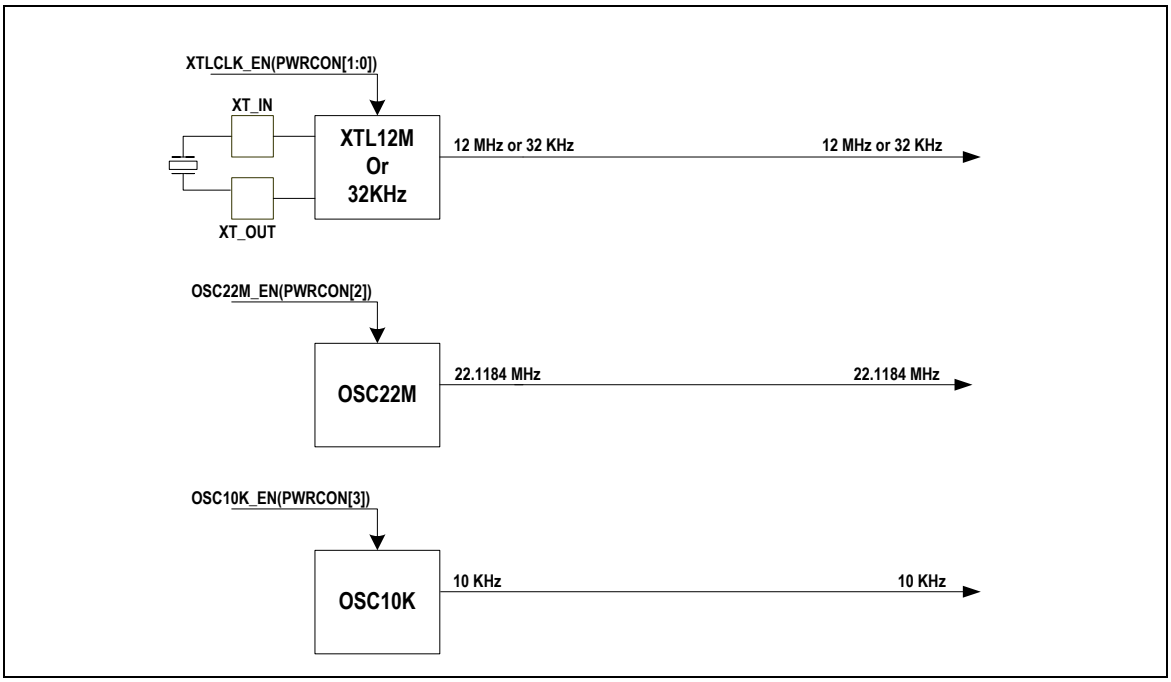

Figure 5.4-1 Clock Generator Block Diagram

5.4.3 System Clock and SysTick Clock

The system clock has 3 clock sources which were generated from clock generator block. The clock source switch depends on the register HCLK_S (CLKSEL0[2:0]). The block diagram is shown below.

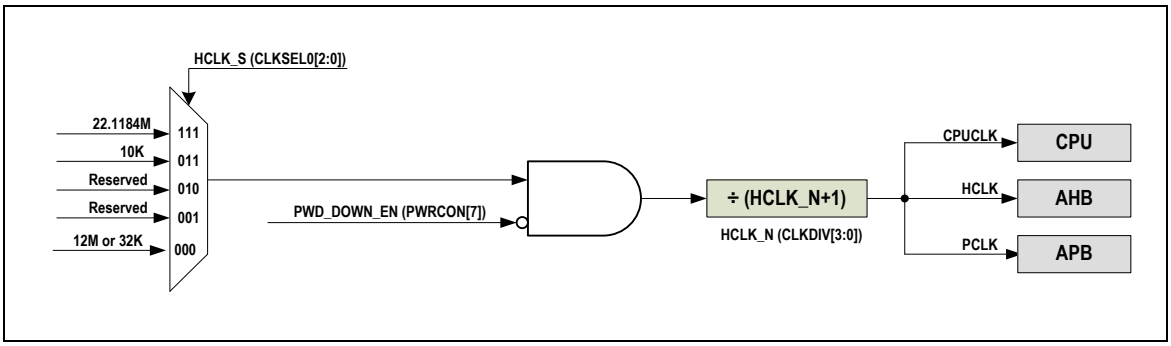

Figure 5.4-2 System Clock Block Diagram

The clock source of SysTick in Cortex-M0 core can use CPU clock or external clock (SYST_CSR[2]). If using external clock, the SysTick clock (STCLK) has 4 clock sources. The clock source switch depends on the setting of the register STCLK_S (CLKSEL0[5:3]). The block diagram is shown in Figure 5.4-3.

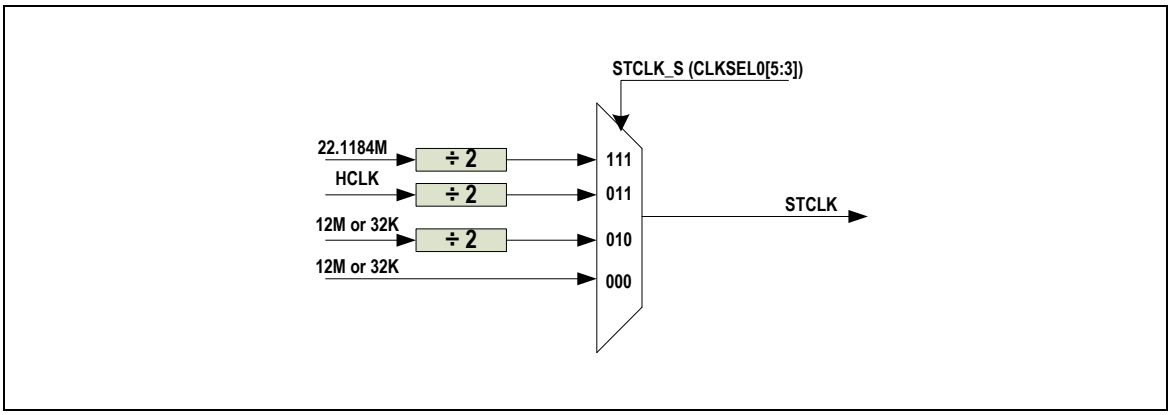

Figure 5.4-3 SysTick Clock Control Block Diagram

5.4.4 AHB Clock Source Selection

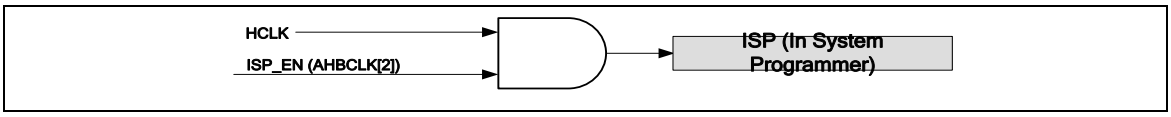

Figure 5.4-4 AHB Clock Source for HCLK

5.4.5 Peripheral Clock Source Selection

The peripheral clock has different clock source switch settings depending on different peripherals. Please refer to the CLKSEL1 and APBCLK register description in section 5.4.9.

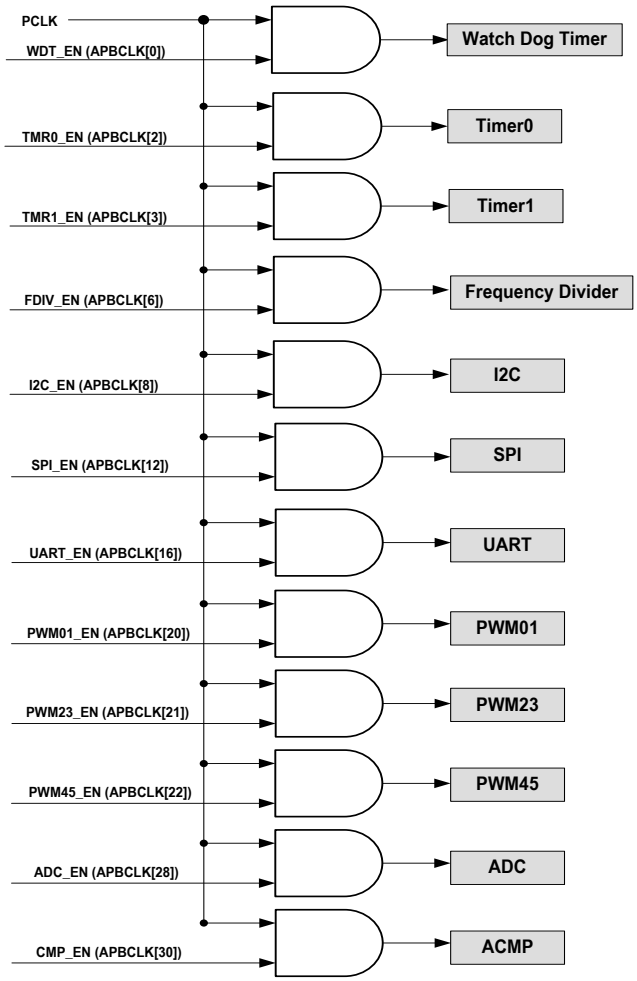

Figure 5.4-5 Peripherals Clock Source Selection for PCLK

	Ext. CLK (12M or 32K)	IRC22.1184M	IRC10K	PCLK
WDT	Yes	No	Yes	Yes

	Ext. CLK (12M or 32K)	IRC22.1184M	IRC10K	PCLK
Timer0	Yes	Yes	Yes	Yes
Timer1	Yes	Yes	Yes	Yes
I^2C	No	No	No	Yes
SPI	No	No	No	Yes
UART	Yes	Yes	No	No
PWM	No	No	No	Yes
ADC	Yes	Yes	No	Yes
ACMP	No	No	No	Yes

Table 5.4-1 Peripherals Engine Clock Source Selection Table

5.4.6 Power-down Mode Clock

When entering Power-down mode, some clock sources and peripheral clocks and system clocks will be disabled. Some clock sources and peripheral clocks are still active in Power-down mode.

Clocks that still be kept active are listed below.

- Clock Generator
  - Internal 10 KHz RC oscillator (LIRC) clock
  - External 32.768 KHz crystal oscillator (LXT) clock (If PD_32K = “1” and XTLCLK_EN[1:0] = “10”)
- Peripherals Clock (When these IP adopt 10 KHz as clock source)
  - Watchdog Clock
  - Timer 0/1 Clock

5.4.7 Frequency Divider Output

This device is equipped with a power-of-2 frequency divider which is composed of 16 chained divide-by-2 shift registers. One of the 16 shift register outputs selected by a sixteen to one multiplexer is reflected to P3.6. Therefore, there are 16 options of power-of-2 divided clocks with the frequency from Fin/21 to Fin/217 where Fin is input clock frequency to the clock divider.

The output formula is Fout = Fin/2(N+1), where Fin is the input clock frequency, Fout is the clock divider output frequency and N is the 4-bit value in FREQDIV.FSEL[3:0].

When FREQDIV.FDIV_EN[4] is set to high, the rising transition will reset the chained counter and starts counting. When FREQDIV.FDIV_EN[4] is written with zero, the chained counter continuously runs until the divided clock reaches low state and stays in low state.

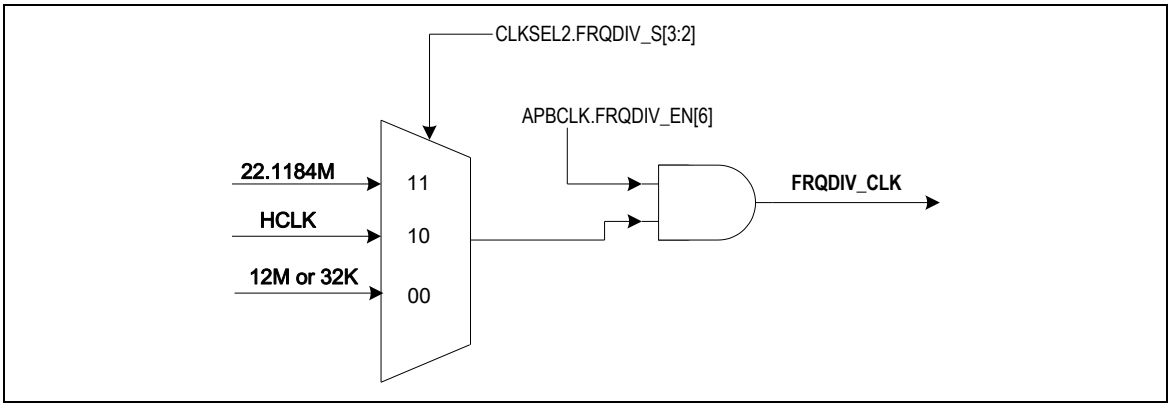

Figure 5.4-6 Clock Source of Frequency Divider

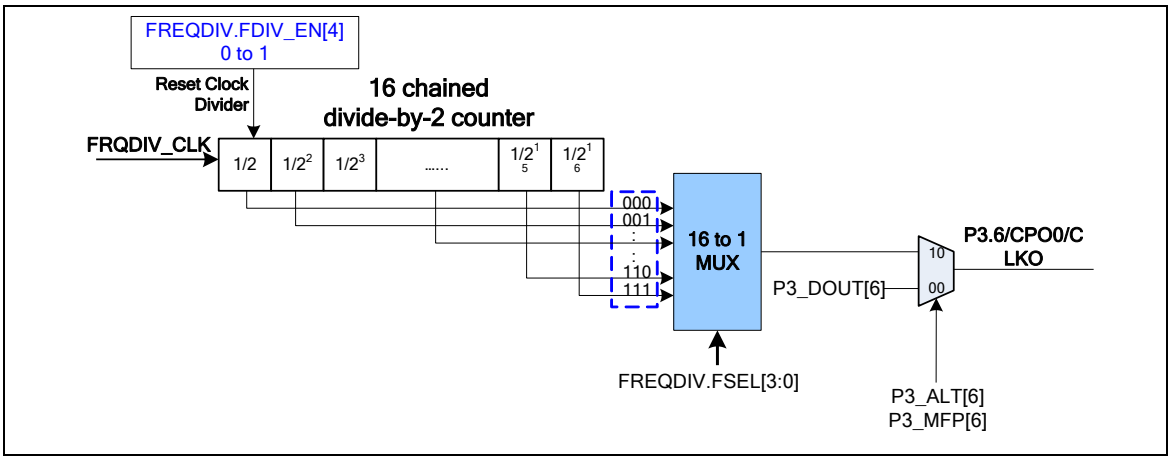

Figure 5.4-7 Block Diagram of Frequency Divider

5.4.8 Clock Control Register Map

R: read only, **W:** write only, **R/W:** both read and write

Register	Offset	R/W	Description	Reset Value
CLK_BA = 0x5000_0200				
PWRCON	CLK_BA+0x00	R/W	System Power-down Control Register	0x0000_001C
AHBCLK	CLK_BA+0x04	R/W	AHB Device Clock Enable Control Register	0x0000_0005
APBCLK	CLK_BA+0x08	R/W	APB Device Clock Enable Control Register	0x0000_0001
CLKSTATUS	CLK_BA+0x0C	R/W	Clock Status Monitor Register	0x0000_0018
CLKSEL0	CLK_BA+0x10	R/W	Clock Source Select Control Register 0	0x0000_003F
CLKSEL1	CLK_BA+0x14	R/W	Clock Source Select Control Register 1	0xAFFF_FFFF
CLKDIV	CLK_BA+0x18	R/W	Clock Divider Number Register	0x0000_0000
CLKSEL2	CLK_BA+0x1C	R/W	Clock Source Select Control Register 2	0x0000_00EF
FRQDIV	CLK_BA+0x24	R/W	Frequency Divider Control Register	0x0000_0000

5.4.9 Clock Control Register

Power-down Control Register (PWRCON)

Except the BIT[6], all the other bits are protected, programming these bits needs an open lock sequence, write 0x59, 0x16, 0x88 to address 0x5000_0100 to un-lock these bits. Refer to the register RegLockAddr at address GCR_BA + 0x100.

Register	Offset	R/W	Description	Reset Value
PWRCON	CLK_BA+0x00	R/W	System Power-down Control Register	0x0000_001C

31	30	29	28	27	26	25	24
-							
23	**22**	**21**	**20**	**19**	**18**	**17**	**16**
-							
15	**14**	**13**	**12**	**11**	**10**	**9**	**8**
-						**PD_32K**	**-**
7	**6**	**5**	**4**	**3**	**2**	**1**	**0**
PWR_DOWN	**PD_WU_STS**	**WINT_EN**	**WU_DLY**	**OSC10K_EN**	**OSC22M_EN**	**XTLCLK_EN**	

Bits	Description	
[31:10]	**-**	**Reserved**
[9]	**PD_32K**	This bit controls the crystal oscillator active or not in Power-down mode. 1 = If XTLCLK_EN[1:0] = 10, 32.768 KHz crystal oscillator (LXT) is still active in Power-down mode. 0 = No effect to Power-down mode.
[8]	**-**	**Reserved**
[7]	**PWR_DOWN_EN**	**System Power-down Active or Enable Bit** When chip waked-up from power-down, this bit is automatically cleared, and user needs to set this bit again for the next power-down. In Power-down mode, the LDO, external crystal and the 22.1184 MHz OSC will be disabled, and the 10K enable is not controlled by this bit. **Note**: If XTLCLK_EN[1:0] = 10 (enable 32 KHz External Crystal Oscillator) and when PWR_DOWN_EN ="1" (system entering Power-down mode), the external crystal oscillator cannot be disabled to ensure system wake-up enabled. When power down, all of the AMBA clocks (HCLKx, CPU clock and the PCLKx) are also disabled, and the clock source selection is ignored. The IP engine clock is not controlled by this bit if the IP clock source is from the 10K clock and the WDT from 10K). 1 = Chip entering the Power-down mode instantly or wait CPU Idle command. 0 = Chip operated in Normal mode or CPU enters into Idle mode.

Bits	Description	
[6]	**PD_WU_STS**	**Power-down Mode Wake-up Interrupt Status** When set by "power-down wake-up event", it indicates that resume from Power-down mode. The flag is set if the GPIO, UART, WDT, ACMP, Timer or BOD wake-up occurred. Write "1" to clear the bit to zero. **Note**: This bit is working only if PD_WU_INT_EN (PWRCON[5]) is set to "1".
[5]	**PD_WU_INT_EN**	**Power-down Mode Wake-up Interrupt Enable (Write-protected)** 0 = Disabled. 1 = Enabled. The interrupt will occur when Power-down mode wake up. The interrupt will occur when both PD_WU_STS and PD_WU_INT_EN are high.
[4]	**WU_DLY**	**Wake-up Delay Counter Enable (Write-protected)** When the chip wakes up from Power-down mode, the clock control will delay certain clock cycles to wait system clock stable. The delayed clock cycle is 4096 clock cycles when chip work at 12 MHz crystal, 4096 clock cycle for 32.768 KHz crystal, and 16 clock cycles when chip work at 22.1184 MHz oscillator. 1 = Clock cycles delay Enabled. 0 = Clock cycles delay Disabled.
[3]	**OSC10K_EN**	**Internal 10 KHz Oscillator (LIRC) Control** 1 = 10 KHz Oscillation Enabled. 0 = 10 KHz Oscillation Disabled.
[2]	**OSC22M_EN**	**Internal 22.1184 MHz Oscillator (HIRC) Control** 1 = 22.1184 MHz Oscillation Enabled. 0 = 22.1184 MHz Oscillation Disabled. **Note**: The default of OSC22M_EN bit is "1".
[1:0]	**XTLCLK_EN[1:0]**	**External 12 MHz (HXT) or 32 KHz (LXT) Crystal Oscillator Control** The default clock source is from internal 22.1184 MHz. These two bits are default set to "00" and the XTAL1 and XTAL2 pins are GPIO. 00 = XTAL1 and XTAL2 are GPIO, disable both XTL32K and XTAL12M (default). 01 = XTAL12M (HXT) Enabled. 10 = XTAL32K (LXT) Enabled. 11 = XTAL1 is external clock input pin, XTAL2 is GPIO. **Note**: To enable external XTAL function, P5_ALT[1:0] and P5_MFP[1:0] bits must also be set in P5_MFP.

Register / Instruction Mode	PWR_DOWN_EN	CPU run WFI instruction	Clock Disabled
Normal Running Mode	0	NO	All clocks are disabled by control register
IDLE Mode	0	YES	Only CPU clock is disabled
Power-down Mode	1	YES	Most clocks are disabled except 10K and some WDT/Timer/PWM/ADC peripheral clock are still active.

Table 5.4-2 Power-down Mode Control Table

When the chip enters Power-down mode, user can wake up this chip by some interrupt sources. User should enable related interrupt sources and NVIC IRQ enable bits (NVIC_ISER) before setting PWR_DOWN_EN bit in PWRCON[7] to ensure the chip can enter power-down and be waked up successfully.

AHB Devices Clock Enable Control Register （AHBCLK）

These register bits are used to enable/disable clock for AMBA clock, AHB engine and peripheral.

Register	Offset	R/W	Description	Reset Value
AHBCLK	CLK_BA+0x04	R/W	AHB Devices Clock Enable Control Register	0x0000_0005

31	30	29	28	27	26	25	24
-							
23	**22**	**21**	**20**	**19**	**18**	**17**	**16**
-							
15	**14**	**13**	**12**	**11**	**10**	**9**	**8**
-							
7	**6**	**5**	**4**	**3**	**2**	**1**	**0**
-					ISP_EN	--	

Bits	Description	
[31:3]	**-**	**Reserved**
[2]	**ISP_EN**	**Flash ISP Controller Clock Enable Control** 1 = Flash ISP engine clock Enabled. 0 = Flash ISP engine clock Disabled.
[1]	**-**	**Reserved**
[0]	**-**	**Reserved.** Must keep this bit “1” always; if set “0” the result is unpredictable.

APB Devices Clock Enable Control Register (APBCLK)

These register bits are used to enable/disable clock for APB engine and peripheral.

Register	Offset	R/W	Description	Reset Value
APBCLK	CLK_BA+0x08	R/W	APB Devices Clock Enable Control Register	0x0000_0001

31	30	29	28	27	26	25	24
-	CMP_EN	-	ADC_EN	-			
23	**22**	**21**	**20**	**19**	**18**	**17**	**16**
-	PWM45_EN	PWM23_EN	PWM01_EN	-			UART_EN
15	**14**	**13**	**12**	**11**	**10**	**9**	**8**
-			SPI_EN	-			I2C_EN
7	**6**	**5**	**4**	**3**	**2**	**1**	**0**
-	FDIV_EN	-		TMR1_EN	TMR0_EN	-	WDT_EN

Bits	Description	
[31]	-	**Reserved**
[30]	**CMP_EN**	**Comparator Clock Enable** 1 = Analog Comparator Clock Enabled. 0 = Analog Comparator Clock Disabled.
[29]	-	**Reserved**
[28]	**ADC_EN**	**Analog-Digital-Converter (ADC) Clock Enable Control** 1 = Both the ADC's APB and the engine clock Enabled. 0 = Both the ADC's APB and the engine clock Disabled.
[27:23]	-	**Reserved**
[22]	**PWM45_EN**	**PWM_45 Clock Enable Control** 1 = Both the PWM45 APB and the engine clock Enabled. 0 = Both the PWM45 APB and the engine clock Disabled.
[21]	**PWM23_EN**	**PWM_23 Clock Enable Control** 1 = Both the PWM23 APB and the engine clock Enabled. 0 = Both the PWM23 APB and the engine clock Disabled.
[20]	**PWM01_EN**	**PWM_01 Clock Enable Control** 1 = Both the PWM01 APB and the engine clock Enabled. 0 = Both the PWM01 APB and the engine clock Disabled.
[19:17]	-	**Reserved**

Bits	Description	
[16]	**UART_EN**	**UART Clock Enable Control** 1 = Both the UART APB and the engine clock Enabled. 0 = Both the UART APB and the engine clock Disabled.
[15:13]	**-**	**Reserved**
[12]	**SPI_EN**	**SPI Clock Enable Control** 0 = Disabled. 1 = Enabled.
[11:9]	**-**	**Reserved**
[8]	**I2C_EN**	**I^2C Clock Enable Control** 0 = Disabled. 1 = Enabled.
[7]	**-**	**Reserved**
[6]	**FDIV_EN**	**Clock Divider Clock Enable Control** 0 = Disabled. 1 = Enabled.
[5:4]	**-**	**Reserved**
[3]	**TMR1_EN**	**Timer1 Clock Enable Control** 0 = Disabled. 1 = Enabled.
[2]	**TMR0_EN**	**Timer0 Clock Enable Control** 0 = Disabled. 1 = Enabled.
[1]	**-**	**Reserved**
[0]	**WDT_EN**	**Watchdog Clock Enable** This bit is the protected bit; programming this needs an open lock sequence, write 0x59, 0x16, 0x88 to address 0x5000_0100 to un-lock this bit. Refer to the register RegLockAddr at address GCR_BA + 0x100. 0 = Disabled. 1 = Enabled.

Clock status Register (CLKSTATUS)

These register bits are used to monitor if the chip clock source is stable or not, and if the clock switch is failed.

Register	Offset	R/W	Description	Reset Value
CLKSTATUS	CLK_BA+0x0C	R/W	Clock Status Monitor Register	0x0000_0018

31	30	29	28	27	26	25	24
-							
23	**22**	**21**	**20**	**19**	**18**	**17**	**16**
-							
15	**14**	**13**	**12**	**11**	**10**	**9**	**8**
-							
7	**6**	**5**	**4**	**3**	**2**	**1**	**0**
CLK_SW_FAIL	-		**OSC22M_STB**	**OSC10K_STB**	-		**XTL_STB**

Bits	Description	
[31:8]	**-**	**Reserved**
[7]	**CLK_SW_FAIL**	**Clock Switch Fail Flag** 1 = Clock switch failed. 0 = Clock switch success. This bit will be set when target switch clock source is not stable. Write “1” to clear this bit to zero.
[6:5]	**-**	**Reserved**
[4]	**OSC22M_STB**	**OSC22M Clock Source Stable Flag** 1 = OSC22M clock stable. 0 = OSC22M clock not stable or not enabled.
[3]	**OSC10K_STB**	**OSC10K Clock Source Stable Flag** 1 = OSC10K clock stable. 0 = OSC10K clock not stable or not enabled.
[2:1]	**-**	**Reserved**
[0]	**XTL_STB**	**XTL12M or XTL32K Clock Source Stable Flag** 1 = XTL12M or XTL32K clock stable. 0 = XTL12M or XTL32K clock not stable or not enabled.

Clock Source Select Control Register 0 (CLKSEL0)

Register	Offset	R/W	Description	Reset Value
CLKSEL0	CLK_BA+0x10	R/W	Clock Source Select Control Register 0	0x0000_003F

31	30	29	28	27	26	25	24
-							
23	**22**	**21**	**20**	**19**	**18**	**17**	**16**
-							
15	**14**	**13**	**12**	**11**	**10**	**9**	**8**
-							
7	**6**	**5**	**4**	**3**	**2**	**1**	**0**
-		STCLK_S			HCLK_S		

Bits	Description	
[31:6]	**-**	**Reserved**
[5:3]	**STCLK_S[2:0]**	**Cortex™-M0 CPU SysTick Clock Source Selection** If SYST_CSR[2]=0, SysTick uses clock source listed below. These bits are protected bit; programming this needs an open lock sequence, write 0x59, 0x16, 0x88 to address 0x5000_0100 to un-lock this bit. Refer to the register RegLockAddr at address GCR_BA + 0x100. 000 = Clock source from 12 MHz or 32 KHz crystal clock. 001 = Reserved. 010 = Clock source from 12 MHz or 32 KHz crystal clock/2. 011 = Clock source from HCLK/2. 111 = Clock source from internal 22.1184 MHz oscillator clock/2. 100, 101, 110 = Reserved. **Note**: To set PWRCON[1:0], select 12 MHz or 32 KHz crystal clock.

Bits	Description	
[2:0]	**HCLK_S[2:0]**	**HCLK Clock Source Selection** **Note**: Before clock switch the related clock sources (pre-select and new-select) must be turned on. These bits are protected bit; programming this needs an open lock sequence, write 0x59, 0x16, 0x88 to address 0x5000_0100 to un-lock this bit. Refer to the register RegLockAddr at address GCR_BA + 0x100. 000 = Clock source from external 12 MHz or 32 KHz crystal clock. 001 = Reserved. 010 = Reserved. 011 = Clock source from internal 10 KHz oscillator clock. 111 = Clock source from internal 22.1184 MHz oscillator clock. Others = Reserved. **Note**: To set PWRCON[1:0], select 12 MHz or 32 KHz crystal clock.

Clock Source Select Control Register 1（CLKSEL1）

Before clock switch the related clock sources (pre-select and new-select) must be turned on.

Register	Offset	R/W	Description	Reset Value
CLKSEL1	CLK_BA+0x14	R/W	Clock Source Select Control Register 1	0xAFFF_FFFF

31	30	29	28	27	26	25	24
PWM23_S		PWM01_S		-		UART_S	
23	**22**	**21**	**20**	**19**	**18**	**17**	**16**
-							
15	**14**	**13**	**12**	**11**	**10**	**9**	**8**
-	TMR1_S			-	TMR0_S		
7	**6**	**5**	**4**	**3**	**2**	**1**	**0**
-				ADC_S		WDT_S	

Bits	Description	
[31:30]	**PWM23_S[1:0]**	**PWM2 and PWM3 Clock Source Selection** PWM2 and PWM3 use the same Engine clock source. They both have the same pre-scalar. 00 = Reserved. 01 = Reserved. 10 = Clock source from HCLK. 11 = Reserved. **Note**: To set PWRCON[1:0], select 12 MHz or 32 KHz crystal clock.
[29:28]	**PWM01_S[1:0]**	**PWM0 and PWM1 Clock Source Selection** PWM0 and PWM1 use the same Engine clock source. They both have the same pre-scalar. 00 = Reserved. 01 = Reserved. 10 = Clock source from HCLK. 11 = Reserved. **Note**: To set PWRCON[1:0], select 12 MHz or 32 KHz crystal clock.
[27:26]	-	**Reserved**

Bits	Description	
[25:24]	**UART_S[1:0]**	**UART Clock Source Selection** 00 = Clock source from external 12 MHz or 32 KHz crystal clock. 01 = Reserved. 10 = Clock source from internal 22.1184 MHz oscillator clock. 11 = Reserved. **Note**: To set PWRCON[1:0], select 12 MHz or 32 KHz crystal clock.
[23:15]	**-**	**Reserved**
[14:12]	**TMR1_S[2:0]**	**TIMER1 Clock Source Selection** 000 = Clock source from external 12 MHz or 32 KHz crystal clock. 001 = Clock source from internal 10 KHz oscillator clock. 010 = Clock source from HCLK. 011 = Clock source from external trigger. 111 = Clock source from internal 22.1184 MHz oscillator clock. 100, 101, 110 = Reserved. **Note**: To set PWRCON[1:0] to select 12 MHz or 32 KHz crystal clock.
[11]	**-**	**Reserved**
[10:8]	**TMR0_S[2:0]**	**TIMER0 Clock Source Selection** 000 = Clock source from external 12 MHz or 32 KHz crystal clock. 001 = Clock source from internal 10 KHz oscillator clock. 010 = Clock source from HCLK. 011 = Clock source from external trigger. 111 = Clock source from internal 22.1184 MHz oscillator clock. 100, 101, 110 = Reserved. **Note**: To set PWRCON[1:0], select 12 MHz or 32 KHz crystal clock.
[7:4]	**-**	**Reserved**
[3:2]	**ADC_S[1:0]**	**ADC Clock Source Selection** 00 = Clock source from external 12 MHz or 32 KHz crystal clock. 01 = Reserved. 10 = Clock source from HCLK clock. 11 = Clock source from internal 22.1184 MHz oscillator clock. **Note**: To set PWRCON[1:0], select 12 MHz or 32 KHz crystal clock.

Bits	Description	
[1:0]	**WDT_S[1:0]**	**WDT CLK Clock Source Selection** These bits are protected bit, programming this needs an open lock sequence, write 0x59, 0x16, 0x88 to address 0x5000_0100 to un-lock this bit. Refer to the register RegLockAddr at address GCR_BA + 0x100. 00 = Clock source from external 12 MHz or 32 KHz crystal clock. 01 = Reserved. 10 = Clock source from HCLK/2048 clock. 11 = Clock source from internal 10 KHz oscillator clock. **Note**: To set PWRCON[1:0], select 12 MHz or 32 KHz crystal clock.

Clock Source Select Control Register (CLKSEL2)

Before clock switch the related clock sources (pre-select and new-select) must be turned on.

Register	Offset	R/W	Description	Reset Value
CLKSEL2	CLK_BA+0x1C	R/W	Clock Source Select Control Register 2	0x0000_00EF

31	30	29	28	27	26	25	24
-							
23	**22**	**21**	**20**	**19**	**18**	**17**	**16**
-							
15	**14**	**13**	**12**	**11**	**10**	**9**	**8**
-							
7	**6**	**5**	**4**	**3**	**2**	**1**	**0**
-		PWM45_S		FRQDIV_S		-	

Bits	Description	
[31:6]	-	**Reserved**
[5:4]	**PWM45_S[1:0]**	**PWM4 and PWM5 Clock Source Selection** – PWM4 and PWM5 use the same Engine clock source. They both have the same pre-scalar. 00 = Reserved. 01 = Reserved. 10 = Clock source from HCLK. 11 = Reserved. **Note**: To set PWRCON[1:0], select 12 MHz or 32 KHz crystal clock.
[3:2]	**FRQDIV_S[1:0]**	**Clock Divider Clock Source Selection** 00 = Clock source from external 12 MHz or 32 KHz crystal clock. 01 = Reserved. 10 = Clock source from HCLK. 11 = Clock source from internal 22.1184 MHz oscillator clock. **Note**: To set PWRCON[1:0], select 12 MHz or 32 KHz crystal clock.
[1:0]	-	**Reserved**

Clock Divider Register (CLKDIV)

Register	Offset	R/W	Description	Reset Value
CLKDIV	CLK_BA+0x18	R/W	Clock Divider Number Register	0x0000_0000

31	30	29	28	27	26	25	24
-							
23	**22**	**21**	**20**	**19**	**18**	**17**	**16**
ADC_N							
15	**14**	**13**	**12**	**11**	**10**	**9**	**8**
-				UART_N			
7	**6**	**5**	**4**	**3**	**2**	**1**	**0**
-				HCLK_N			

Bits	Description	
[31:24]	**-**	**Reserved**
[23:16]	**ADC_N[7:0]**	**ADC Clock Divide Number from ADC Clock Source** The ADC clock frequency = (ADC clock source frequency) / (ADC_N + 1).
[15:12]	**-**	**Reserved**
[11:8]	**UART_N[3:0]**	**UART Clock Divide Number from UART Clock Source** The UART clock frequency = (UART clock source frequency) / (UART_N + 1).
[7:4]	**-**	**Reserved**
[3:0]	**HCLK_N[3:0]**	**HCLK Clock Divide Number from HCLK Clock Source** The HCLK clock frequency = (HCLK clock source frequency) / (HCLK_N + 1).

Frequency Divider Control Register (FRQDIV)

Register	Offset	R/W	Description	Reset Value
FRQDIV	CLK_BA+0x24	R/W	Frequency Divider Control Register	0x0000_0000

31	30	29	28	27	26	25	24
-							
23	**22**	**21**	**20**	**19**	**18**	**17**	**16**
-							
15	**14**	**13**	**12**	**11**	**10**	**9**	**8**
-							
7	**6**	**5**	**4**	**3**	**2**	**1**	**0**
-			DIVIDER_EN	FSEL			

Bits	Description	
[31:5]	**-**	**Reserved**
[4]	**DIVIDER_EN**	**Frequency Divider Enable Bit** 0 = Frequency Divider Disabled. 1 = Frequency Divider Enabled.
[3:0]	**FSEL[3:0]**	**Divider Output Frequency Selection Bits** The formula of output frequency is: $F_{out} = F_{in}/2^{(N+1)}$, Fin is the input clock frequency. Fout is the frequency of divider output clock. N is the 4-bit value of FSEL[3:0].

5.5 Comparator Controller (CMPC)

5.5.1 Overview

The NuMicro Mini51™ Series contains two comparators which can be used in a number of different configurations. The comparator output is a logical one when positive input is greater than negative input; otherwise, the output is zero. Each comparator can be configured to cause an interrupt when the comparator output value changes. The block diagram is shown in Figure 5.5-1.

Note that the analog input port pins must be configured as the input type before Analog Comparator function is enabled.

5.5.2 Features

- Analog input voltage range: 0 ~ 5.0V
- Hysteresis function support
- Two analog comparators with optional internal reference voltage input at negative end
- One comparator interrupt requested by one of the comparators

5.5.3 Block Diagram

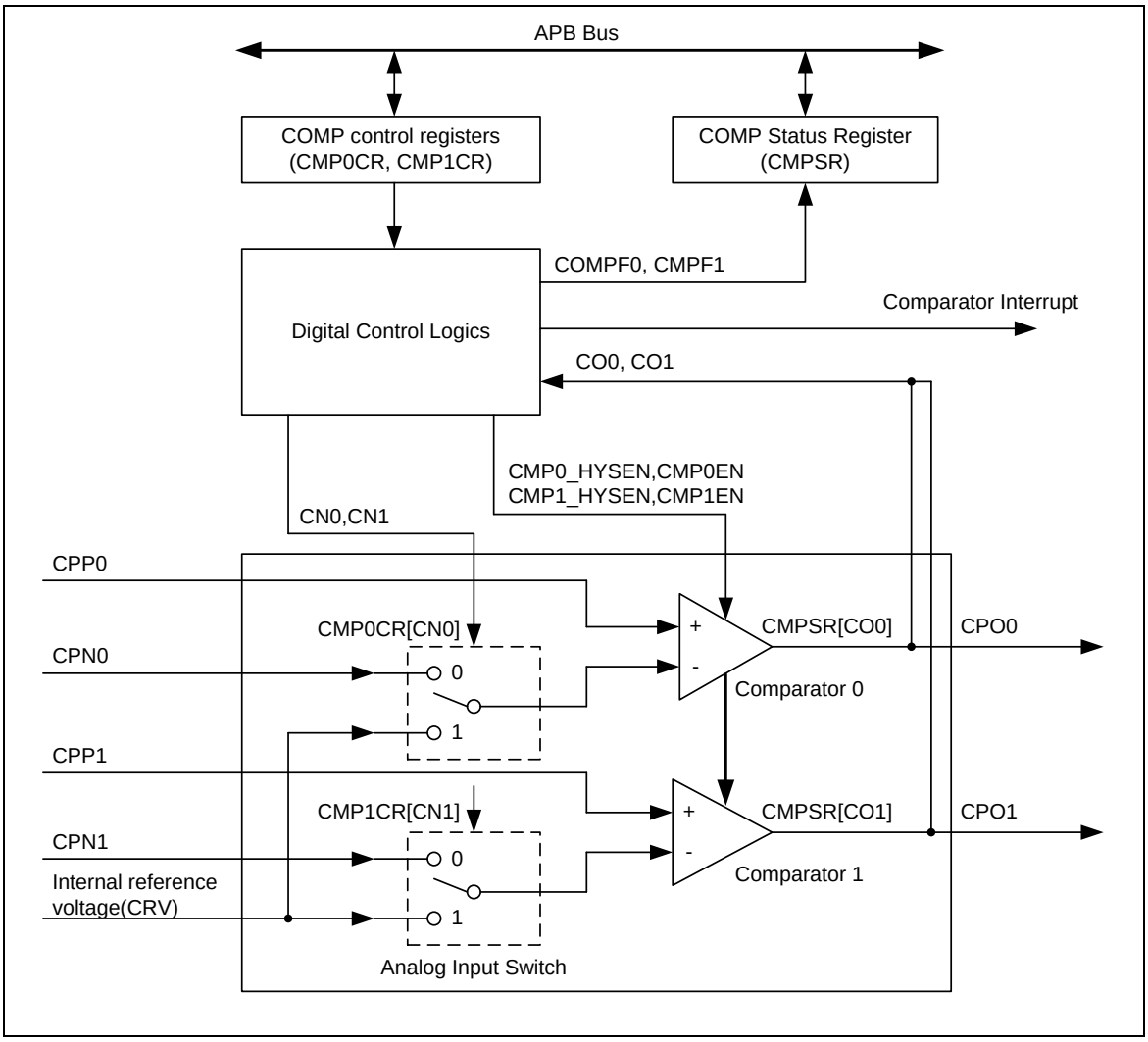

Figure 5.5-1 Analog Comparator Block Diagram

5.5.4 Functional Description

5.5.4.1 Interrupt Sources

The comparator generates an output CO1 (CO2) in CMPSR register which is sampled by PCLK. If CMP0IE (CMP1IE) bit in CMP0CR (CMP1CR) is set then a state change on the comparator output CO0 (CO1) will cause comparator flag CMPF0 (CMPF1) set and the comparator interrupt requested. Software can write a zero to CMP0 and CMPF1 to stop interrupt request.

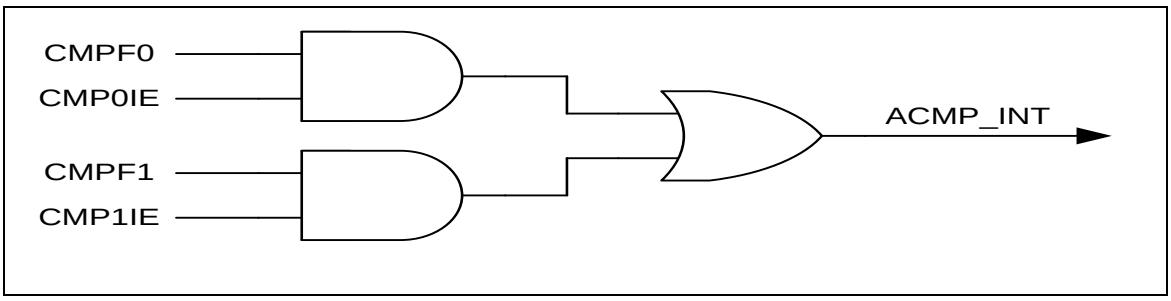

Figure 5.5-2 Comparator Controller Interrupt Sources

5.5.5 Comparator Reference Voltage (CRV)

5.5.5.1 Introduction

The comparator reference voltage (CRV) module is responsible for generating reference voltage for comparators. The CRV module consists of resisters ladder and analog switch, and user can set the CRV output voltage using CRVS[3:0] registers and select the reference voltage to CMP by setting OUL_SEL register.

5.5.5.2 Features:

- User selectable references voltage by setting CRVS[3:0] registers
- Automatic disable resisters ladder for reducing power consumption when setting OUT_SEL=0 (selecting Band-gap 1.35V output)

The block diagram of the CRV module is shown below:

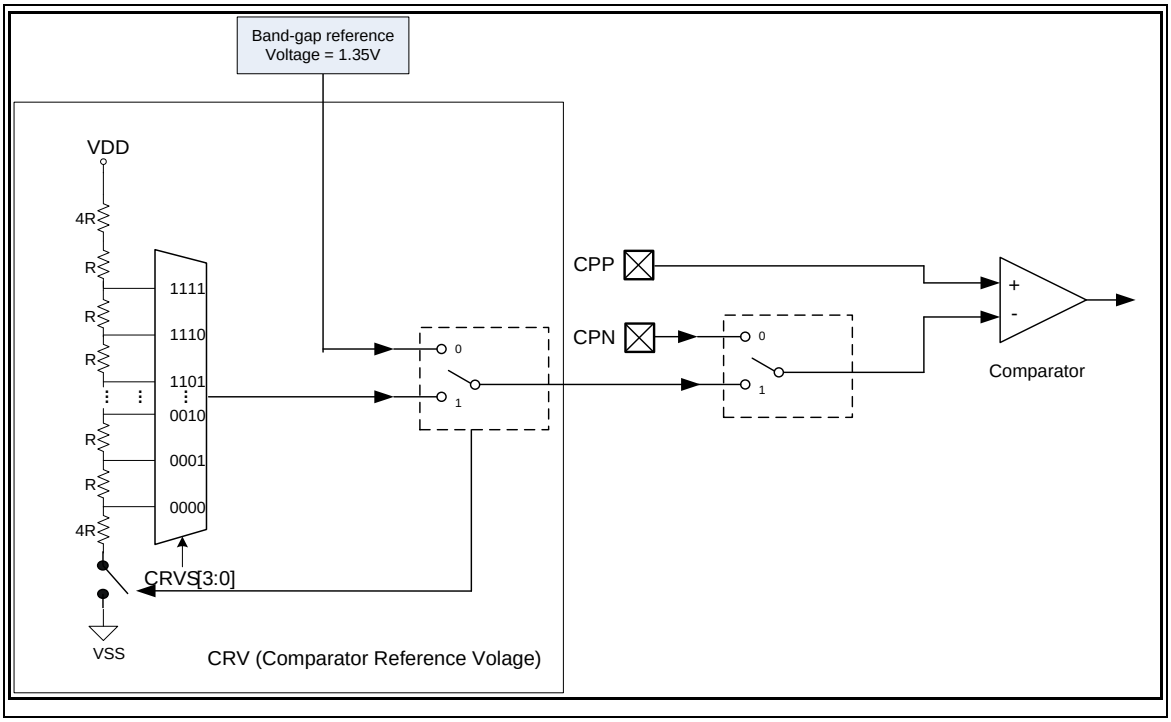

Figure 5.5-3 Comparator Reference Voltage Block Diagram

5.5.6 Register Map

R: read only, **W**: write only, **R/W**: both read and write

Register	Offset	R/W	Description	Reset Value
CMP_BA = 0x400D_0000				
CMP0CR	CMP_BA+0x00	R/W	Comparator0 Control Register	0x0000_0000
CMP1CR	CMP_BA+0x04	R/W	Comparator1 Control Register	0x0000_0000
CMPSR	CMP_BA+0x08	R/W	Comparator Status Register	0x0000_0000
CMPRVCR	CMP_BA+0x0C	R/W	Comparator Reference Voltage Control Register	0x0000_0000

5.5.7 Register Description

Comparator0 Control Register (CMP0CR)

Register	Offset	R/W	Description	Reset Value
CMP0CR	CMP_BA+0x00	R/W	Comparator0 Control Register	0x0000_0000

31	30	29	28	27	26	25	24
-							
23	**22**	**21**	**20**	**19**	**18**	**17**	**16**
-							
15	**14**	**13**	**12**	**11**	**10**	**9**	**8**
-							
7	**6**	**5**	**4**	**3**	**2**	**1**	**0**
-			**CN0**	-	**CMP0_HYSEN**	**CMP0IE**	**CMP0EN**

Bits	Description	
[31:5]	-	**Reserved**
[4]	**CN0**	**Comparator0 Negative Input Selection** 1 = The internal comparator reference voltage (Vref = 1.35V or from CRV setting value) is selected as the negative comparator input. 0 = The comparator reference pin CPN0 is selected as the negative comparator input.
[3]	-	**Reserved**
[2]	**CMP0_HYSEN**	**Comparator0 Hysteresis Enable** 1 = CMP0 Hysteresis function at comparator 0 Enabled that the typical range is 20mV. 0 = CMP0 Hysteresis function Disabled (Default).
[1]	**CMP0IE**	**Comparator0 Interrupt Enable** 1 = CMP0 interrupt function Enabled. 0 = CMP0 interrupt function Disabled. Interrupt is generated if CMP0IE bit is set to “1” after CMP0 conversion finished.
[0]	**CMP0EN**	**Comparator0 Enable** 1 = Enabled. 0 = Disabled. Comparator output needs to wait 10 us stable time after CMP0EN is set.

Comparator1 Control Register (CMP1CR)

Register	Offset	R/W	Description	Reset Value
CMP1CR	CMP_BA+0x04	R/W	Comparator1 Control Register	0x0000_0000

31	30	29	28	27	26	25	24
-							
23	**22**	**21**	**20**	**19**	**18**	**17**	**16**
-							
15	**14**	**13**	**12**	**11**	**10**	**9**	**8**
-							
7	**6**	**5**	**4**	**3**	**2**	**1**	**0**
-			CN1	-	CMP1_HYSEN	CMP1IE	CMP1EN

Bits	Description	
[31:5]	-	**Reserved**
[4]	**CN1**	**Comparator1 Negative Input Selection** 1 = The internal comparator reference voltage (Vref=1.35V or from CRV setting value) is selected as the negative comparator input. 0 = The comparator reference pin CPN0 is selected as the negative comparator input.
[3]	-	**Reserved**
[2]	**CMP1_HYSEN**	**Comparator1 Hysteresis Enable** 1 = CMP0 Hysteresis function at comparator 0 Enabled that the typical range is 20mV. 0 = CMP0 Hysteresis function Disabled (Default).
[1]	**CMP1IE**	**Comparator1 Interrupt Enable** 1 = CMP1 interrupt function Enabled. 0 = CMP1 interrupt function Disabled. Interrupt is generated if CMP1IE bit is set to “1” after CMP1 conversion finished.
[0]	**CMP1EN**	**Comparator1 Enable** 1 = Enabled. 0 = Disabled. Comparator output needs to wait 10 us stable time after CMP1EN is set.

Comparator Status Register (CMPSR)

Register	Offset	R/W	Description	Reset Value
CMPSR	CMP_BA+0x08	R/W	Comparator Status Register	0x0000_0000

31	30	29	28	27	26	25	24
-							
23	**22**	**21**	**20**	**19**	**18**	**17**	**16**
-							
15	**14**	**13**	**12**	**11**	**10**	**9**	**8**
-							
7	**6**	**5**	**4**	**3**	**2**	**1**	**0**
-				**CO1**	**CO0**	**CMPF1**	**CMPF0**

Bits	Description	
[31:4]	**-**	**Reserved**
[3]	**CO1**	**Comparator1 Output** Synchronized to the APB clock to allow reading by software. Cleared when the comparator is disabled (CMP1EN = 0).
[2]	**CO0**	**Comparator0 Output** Synchronized to the APB clock to allow reading by software. Cleared when the comparator is disabled (CMP0EN = 0).
[1]	**CMPF1**	**Comparator1 Flag** This bit is set by hardware whenever the comparator1 output changes state. This will cause an interrupt if CMP1IE set. Write “1” to clear this bit to zero.
[0]	**CMPF0**	**Comparator0 Flag** This bit is set by hardware whenever the comparator0 output changes state. This will cause an interrupt if CMP0IE is set. Write “1” to clear this bit to zero.

CMPRV Control Register (CMPRVCR)

Register	Offset	R/W	Description	Reset Value
CMPRVCR	CMP_BA+0x0C	R/W	Comparator Reference Voltage Control Register	0x0000_0000

31	30	29	28	27	26	25	24
-							
23	**22**	**21**	**20**	**19**	**18**	**17**	**16**
-							
15	**14**	**13**	**12**	**11**	**10**	**9**	**8**
-							
7	**6**	**5**	**4**	**3**	**2**	**1**	**0**
OUT_SEL	-			**CRVS**			

Bits	Description	
[31:8]	-	**Reserved**
[7]	**OUT_SEL**	**CRV Module Output Selection** 1= CRVS setting voltage Selected. 0= Band-gap 1.35 V voltage Selected.
[6:4]	-	**Reserved**
[3:0]	**CRVS[3:0]**	**Comparator Reference Voltage Setting** CRVS = VDD x (1/6+CRV[3:0]/24)

5.6 Analog-to-Digital Converter (ADC) Controller

5.6.1 Overview

The NuMicro Mini51™ series contains one 10-bit successive approximation analog-to-digital converters (SAR A/D converter) with 8 input channels. The A/D converters can be started by software and external STADC/P3.2 pin.

Note that the analog input pins must be configured as input type before ADC function is enabled.

5.6.2 Features

- Analog input voltage range: 0 ~ Vref (Max to 5.0 V)
- 10-bit resolution and 8-bit accuracy is guaranteed
- Up to 8 single-end analog input channels
- Maximum ADC clock frequency is 6 MHz
- Up to 150K SPS conversion rate
- An A/D conversion is performed one time on a specified channel
- An A/D conversion can be started by:
  - Software write “1” to ADST bit
  - External pin STADC
- Conversion results are held in data register with valid and overrun indicators
- Conversion results can be compared with specified value and user can select whether to generate an interrupt when conversion results are equal to the compare register settings
- Channel 7 supports 2 input sources: External analog voltage and internal fixed band-gap voltage

5.6.3 Block Diagram

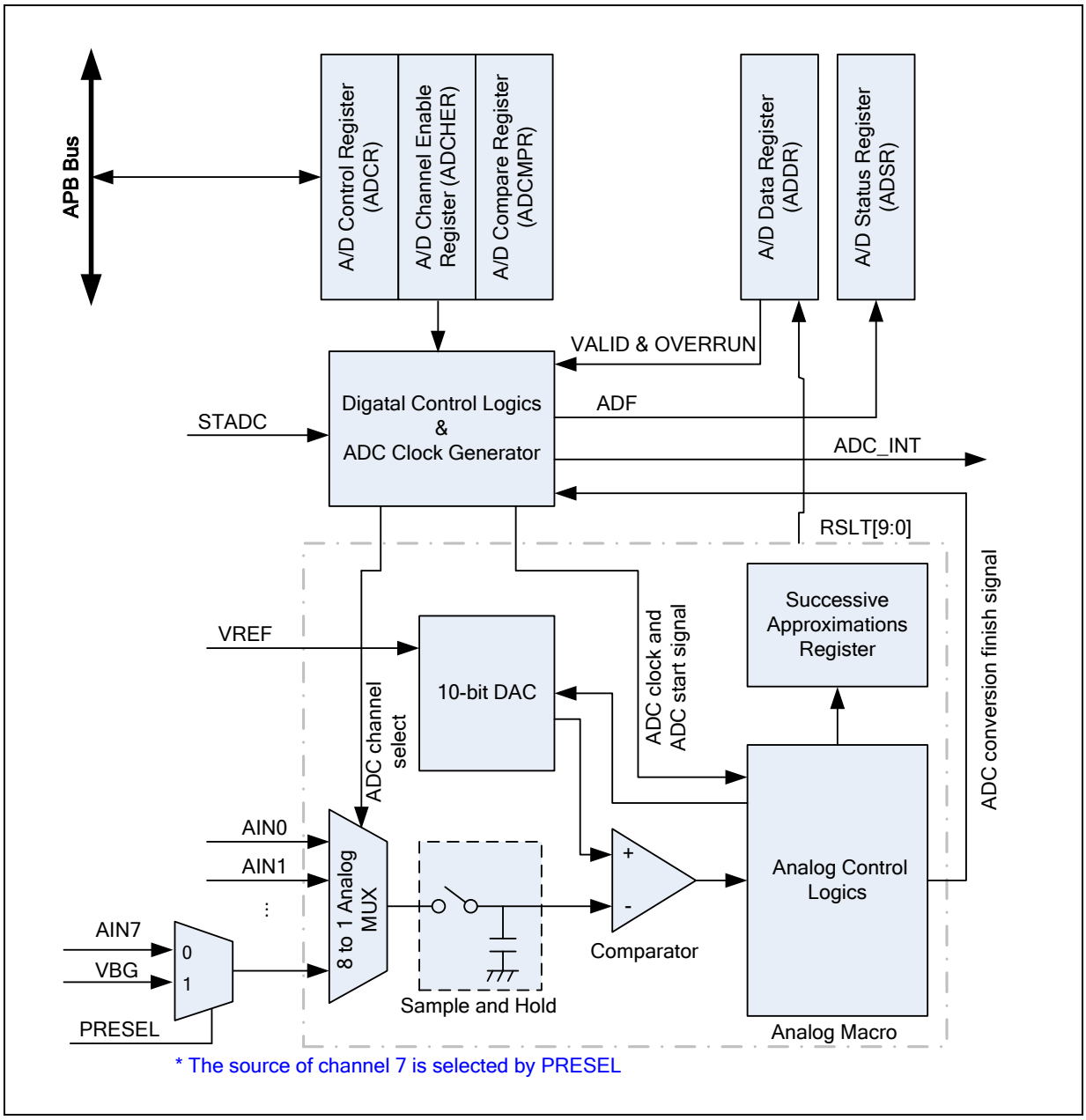

Figure 5.6-1 ADC Controller Block Diagram

5.6.4 ADC Operation Procedure

The A/D converter operates by successive approximation with 10-bit resolution. When changing the analog input channel is enabled, in order to prevent incorrect operation, software must clear ADST bit to “0” in the ADCR register. The A/D converter discards the current conversion immediately and enters idle state while ADST bit is cleared.

5.6.4.1 ADC Clock Generator

The maximum sampling rate is up to 150 K. The ADC engine has clock source selected by 2-bit ADC_S (CLKSEL1[3:2]), the ADC clock frequency is divided by an 8-bit prescaler with the formula:

The ADC clock frequency = (ADC clock source frequency) / (ADC_N+1);
where the 8-bit ADC_N is located in register CLKDIV[23:16].

In general, software can set ADC_S and ADC_N to get 6 MHz or slightly less.

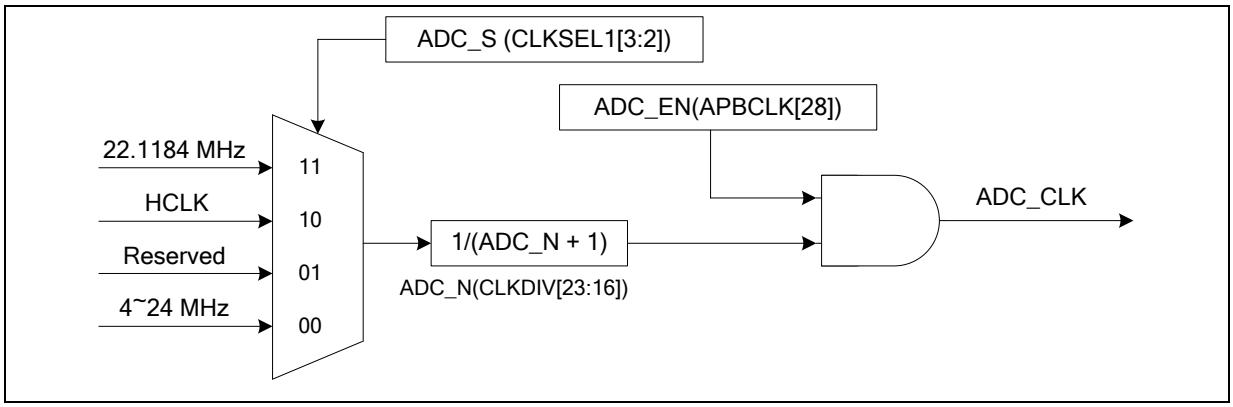

Figure 5.6-2 ADC Clock Control

5.6.4.2 Operation

A/D conversion is performed only once on the specified single channel. The operation is as follows:

1. A/D conversion will be started when the ADST bit of ADCR is set to “1” by software or external trigger input.
2. When A/D conversion is finished, the result is stored in the A/D data register (ADDR).
3. The ADF bit of ADSR register will be set to “1”. If the ADIE bit of ADCR register is set to “1”, the ADC interrupt will be asserted.
4. The ADST bit remains “1” during A/D conversion. When A/D conversion ends, the ADST bit is automatically cleared to “0” and the A/D converter enters in idle state.

Note: If software enables more than one channel, the channel with the lowest number will be selected and the other enabled channels will be ignored.

5.6.4.3 External Trigger Input Sampling and A/D Conversion Time

A/D conversion can be triggered by external pin request. When the ADCR.TRGEN is set to high, ADC external trigger function is enabled and trigger input source is from the STADC pin. Software can set TRGCOND to select trigger condition is falling or rising edge. An 8-bit sampling counter is used to deglitch. If edge trigger condition is happened, the high and low state must be kept at least 4 PLCKs. Pulse that is shorter than this specification will be ignored.

5.6.4.4 Conversion Result Monitor by Compare Mode Function

The NuMicro Mini51™ series controller provides two sets of compare registers, ADCMPR0 and

ADCMPR1 to monitor the maximum two specified channel conversion results from A/D conversion module (refer to Figure 5.6-3). Software can select which channel to be monitored by setting CMPCH (ADCMPRx[5:0]) and CMPCOND bit is used to check if conversion results are less than the specified value or greater than (or equal to) the value specified in CMPD[9:0]. When the conversion of the channel specified by CMPCH is completed, the comparing action will be triggered one time automatically. When the compare result meets the setting, compare match counter will increase 1; otherwise, the compare match counter will be cleared to "0". When counter value reaches the setting of (CMPMATCNT+1) the CMPF bit will be set to "1". If CMPIE bit is set then an ADC_INT interrupt request is generated. The detailed logics diagram is shown in Figure 5.6-3.

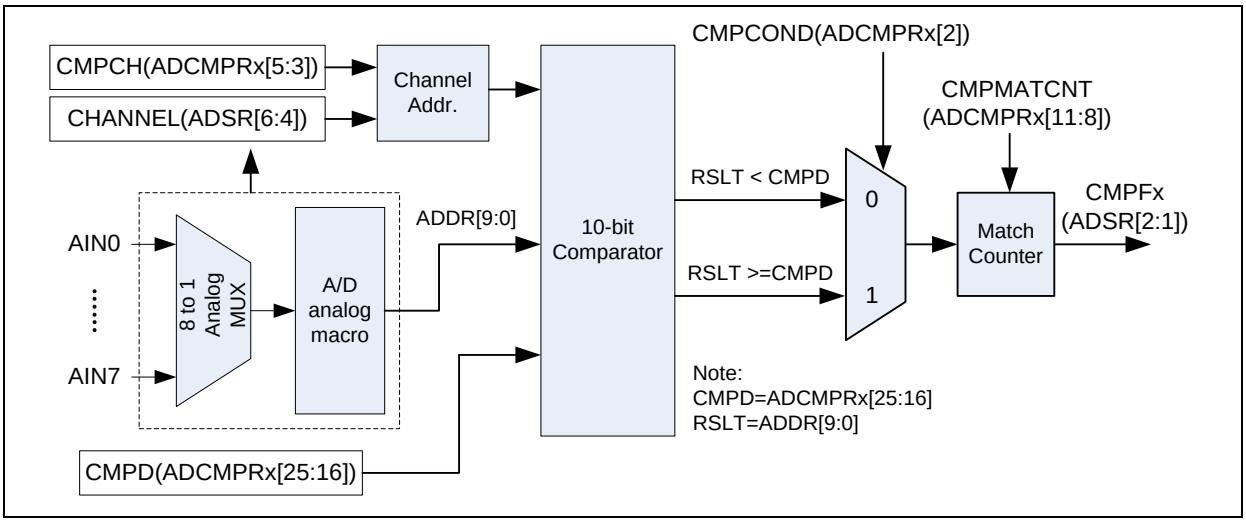

Figure 5.6-3 A/D Conversion Result Monitor Logics Diagram

5.6.4.5 Interrupt Sources

There are three interrupt sources of ADC interrupt. When an ADC operation mode finishes its conversion, the A/D conversion end flag, ADF, will be set to "1". The CMPF0 and CMPF1 are the compare flags of compare function. When the conversion result meets the settings of ADCMPR0/1, the corresponding flag will be set to "1". When one of the flags, ADF, CMPF0 and CMPF1, is set to "1" and the corresponding interrupt enable bit, ADIE of ADCR and CMPIE of ADCMPR0/1, is set to "1", the ADC interrupt will be asserted. Software can clear the flag to revoke the interrupt request.

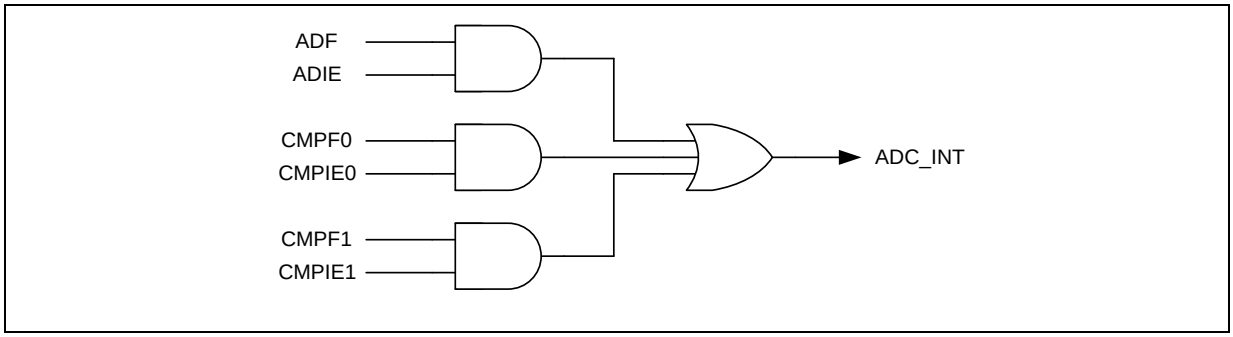

Figure 5.6-4 A/D Controller Interrupt

5.6.5 ADC Register Map

R: read only, **W**: write only, **R/W**: both read and write

Register	Offset	R/W	Description	Reset Value
ADC_BA = 0x400E_0000				
ADDR	ADC_BA+0x00	R	A/D Data Register	0x0000_0000
ADCR	ADC_BA+0x20	R/W	A/D Control Register	0x0000_0000
ADCHER	ADC_BA+0x24	R/W	A/D Channel Enable Register	0x0000_0000
ADCMPR0	ADC_BA+0x28	R/W	A/D Compare Register 0	0x0000_0000
ADCMPR1	ADC_BA+0x2C	R/W	A/D Compare Register 1	0x0000_0000
ADSR	ADC_BA+0x30	R/W	A/D Status Register	0x0000_0000

5.6.6 ADC Register

A/D Data Registers (ADDR)

Register	Offset	R/W	Description	Reset Value
ADDR	ADC_BA+0x00	R	A/D Data Register	0x0000_0000

31	30	29	28	27	26	25	24
-							
23	**22**	**21**	**20**	**19**	**18**	**17**	**16**
-						VALID	OVERRUN
15	**14**	**13**	**12**	**11**	**10**	**9**	**8**
-						RSTL	
7	**6**	**5**	**4**	**3**	**2**	**1**	**0**
RSTL							

Bits	Description	
[31:18]	**-**	**Reserved**
[17]	**VALID**	**Valid Flag** 1 = Data in RSLT[9:0] bits valid. 0 = Data in RSLT[9:0] bits not valid. This bit is set to “1” when ADC conversion is completed and cleared by hardware after the ADDR register is read.
[16]	**OVERRUN**	**Over Run Flag** 1 = Data in RSLT[9:0] overwritten. 0 = Data in RSLT[9:0] is the recent conversion result. If converted data in RSLT[9:0] has not been read before the new conversion result is loaded to this register, OVERRUN is set to “1”. It is cleared by hardware after the ADDR register is read.
[15:10]	**-**	**Reserved**
[9:0]	**RSLT[9:0]**	**A/D Conversion Result** This field contains the conversion result of ADC.

A/D Control Register (ADCR)

Register	Offset	R/W	Description	Reset Value
ADCR	ADC_BA+0x20	R/W	ADC Control Register	0x0000_0000

31	30	29	28	27	26	25	24
-							
23	**22**	**21**	**20**	**19**	**18**	**17**	**16**
-							
15	**14**	**13**	**12**	**11**	**10**	**9**	**8**
-				ADST	-		TRGEN
7	**6**	**5**	**4**	**3**	**2**	**1**	**0**
	TRGCOND	-				ADIE	ADEN

Bits	Description	
[31:12]	**-**	**Reserved**
[11]	**ADST**	**A/D Conversion Start** 1 = Conversion started. 0 = Conversion stopped and A/D converter entered idle state. ADST bit can be set to "1" from two sources: software and external pin STADC. ADST will be cleared to "0" by hardware automatically.
[10:9]	**-**	**Reserved**
[8]	**TRGEN**	**External Trigger Enable** Enable or disable triggering of A/D conversion by external STADC pin. 1 = Enabled. 0 = Disabled.
[7]	**-**	**Reserved**
[6]	**TRGCOND**	**External Trigger Condition** This bit decides whether the external pin STADC trigger event is falling or raising edge. The signal must be kept in stable state at least 4 PCLKs at high and low state for edge trigger. 0 = Falling edge. 1 = Raising edge.
[5:2]	**-**	**Reserved**
[1]	**ADIE**	**A/D Interrupt Enable** 1 = A/D interrupt function Enabled. 0 = A/D interrupt function Disabled. A/D conversion end interrupt request is generated if the ADIE bit is set to "1".

Bits	Description	
[0]	**ADEN**	**A/D Converter Enable** 1 = Enabled. 0 = Disabled. Before starting the A/D conversion function, this bit should be set to “1”. Clear it to “0” to disable A/D converter analog circuit power consumption.

A/D Channel Enable Register (ADCHER)

Register	Offset	R/W	Description	Reset Value
ADCHER	ADC_BA+0x24	R/W	A/D Channel Enable	0x0000_0000

31	30	29	28	27	26	25	24
-							
23	**22**	**21**	**20**	**19**	**18**	**17**	**16**
-							
15	**14**	**13**	**12**	**11**	**10**	**9**	**8**
-							**PRESEL**
7	**6**	**5**	**4**	**3**	**2**	**1**	**0**
CHEN7	**CHEN6**	**CHEN5**	**CHEN4**	**CHEN3**	**CHEN2**	**CHEN1**	**CHEN0**

Bits	Description	
[31:9]	**-**	**Reserved**
[8]	**PRESEL**	**Analog Input Channel 7 Selection** 0 = Analog Input Channel 7. 1 = Band-gap (VBG) Analog Input. **Note**: When software selects the band-gap voltage as the analog input source of ADC channel 7, the ADC clock rate needs to be limited to lower than 300 KHz.
[7]	**CHEN7**	**Analog Input Channel 7 Enable** 1 = Enabled. 0 = Disabled.
[6]	**CHEN6**	**Analog Input Channel 6 Enable** 1 = Enabled. 0 = Disabled.
[5]	**CHEN5**	**Analog Input Channel 5 Enable** 1 = Enabled. 0 = Disabled.
[4]	**CHEN4**	**Analog Input Channel 4 Enable** 1 = Enabled. 0 = Disabled.
[3]	**CHEN3**	**Analog Input Channel 3 Enable** 1 = Enabled. 0 = Disabled.
[2]	**CHEN2**	**Analog Input Channel 2 Enable**

Bits	Description	
		1 = Enabled. 0 = Disabled.
[1]	**CHEN1**	**Analog Input Channel 1 Enable** 1 = Enabled. 0 = Disabled.
[0]	**CHEN0**	**Analog Input Channel 0 Enable** 1 = Enabled. 0 = Disabled. **Note:** If software enables more than one channel, the channel with the lowest number will be selected and the other enabled channels will be ignored. That means channel 0 is the highest priority.

A/D Compare Register 0/1 (ADCMPR0/1)

Register	Offset	R/W	Description	Reset Value
ADCMPR0	ADC_BA+0x28	R/W	A/D Compare Register 0	0x0000_0000
ADCMPR1	ADC_BA+0x2C	R/W	A/D Compare Register 1	0x0000_0000

31	30	29	28	27	26	25	24
-						CMPD	
23	**22**	**21**	**20**	**19**	**18**	**17**	**16**
CMPD							
15	**14**	**13**	**12**	**11**	**10**	**9**	**8**
-				CMPMATCNT			
7	**6**	**5**	**4**	**3**	**2**	**1**	**0**
-		CMPCH			CMPCOND	CMPIE	CPMEN

Bits	Description	
[31:26]	**-**	**Reserved**
[25:16]	**CMPD[9:0]**	**Comparison Data** The 10-bit data is used to compare with conversion result of specified channel.
[15:12]	**-**	**Reserved**
[11:8]	**CMPMATCNT [3:0]**	**Compare Match Count** When the specified A/D channel analog conversion result matches the compare condition defined by CMPCOND[2], the internal match counter will increase 1. When the internal counter reaches the value to (CMPMATCNT +1), the CMPFx bit will be set.
[7:6]	**-**	**Reserved**
[5:3]	**CMPCH[2:0]**	**Compare Channel Selection**

CMPCH[2:0]	Compare Channel Selection
000	Channel 0 conversion result is selected to be compared.
001	Channel 1 conversion result is selected to be compared.
010	Channel 2 conversion result is selected to be compared.
011	Channel 3 conversion result is selected to be compared.
100	Channel 4 conversion result is selected to be compared.
101	Channel 5 conversion result is selected to be compared.
110	Channel 6 conversion result is selected to be compared.
111	Channel 7 conversion result is selected to be compared.

Bits	Description	
[2]	**CMPCOND**	**Compare Condition** 1 = Set the compare condition as that when a 10-bit A/D conversion result is greater or equal to the 10-bit CMPD (ADCMPRx[27:16]), the internal match counter will increase one. 0 = Set the compare condition as that when a 10-bit A/D conversion result is less than the 10-bit CMPD (ADCMPRx[27:16]), the internal match counter will increase one. **Note**: When the internal counter reaches the value to (CMPMATCNT +1), the CMPFx bit will be set.
[1]	**CMPIE**	**Compare Interrupt Enable** 1 = Compare function interrupt Enabled. 0 = Compare function interrupt Disabled. If the compare function is enabled and the compare condition matches the setting of CMPCOND and CMPMATCNT, CMPFx bit will be asserted, in the meanwhile, if CMPIE is set to “1”, a compare interrupt request is generated.
[0]	**CMPEN**	**Compare Enable** 1 = Compare function Enabled. 0 = Compare function Disabled. Set this bit to “1” to enable comparing CMPD[9:0] with specified channel conversion results when converted data is loaded into the ADDR register.

A/D Status Register (ADSR)

Register	Offset	R/W	Description	Reset Value
ADSR	ADC_BA+0x30	R/W	ADC Status Register	0x0000_0000

31	30	29	28	27	26	25	24
-							
23	**22**	**21**	**20**	**19**	**18**	**17**	**16**
-							**OVERRUN**
15	**14**	**13**	**12**	**11**	**10**	**9**	**8**
-							**VALID**
7	**6**	**5**	**4**	**3**	**2**	**1**	**0**
-	**CHANNEL**			**BUSY**	**CMPF1**	**CMPF0**	**ADF**

Bits	Description	
[31:17]	**-**	**Reserved**
[16]	**OVERRUN**	**Over Run Flag** It is a mirror to OVERRUN bit in ADDR.
[15:9]	**-**	**Reserved**
[8]	**VALID**	**Data Valid Flag** It is a mirror of VALID bit in ADDR.
[7]	**-**	**Reserved**
[6:4]	**CHANNEL [2:0]**	**Current Conversion Channel** This field reflects the current conversion channel when BUSY=1. When BUSY=0, it shows the number of the next converted channel. It is read only.
[3]	**BUSY**	**BUSY/IDLE** 1 = A/D converter is busy at conversion. 0 = A/D converter is in idle state. This bit is mirror of as ADST bit in ADCR. It is read only.
[2]	**CMPF1**	**Compare Flag #1** When the selected channel A/D conversion result meets the setting condition in ADCMPR1, this bit is set to “1”. Then it is cleared by writing “1” to itself. 1 = Conversion result in ADDR meets the ADCMPR1 setting. 0 = Conversion result in ADDR does not meet the ADCMPR1 setting.
[1]	**CMPF0**	**Compare Flag #0**

Bits	Description	
		When the selected channel A/D conversion result meets the setting condition in ADCMPR0, this bit is set to “1”. Then it is cleared by writing “1” to itself. 1 = Conversion result in ADDR meets the ADCMPR0 setting. 0 = Conversion result in ADDR does not meet the ADCMPR0 setting.
[0]	**ADF**	**A/D Conversion End Flag** A status flag that indicates the end of A/D conversion. ADF is set to “1” when A/D conversion ends. This flag can be cleared by writing “1” to itself.

5.7 Flash Memory Controller (FMC)

5.7.1 Overview

The NuMicro Mini51™ series is equipped with 4K/8K/16K bytes on chip embedded Flash EPROM for application program memory (APROM) that can be updated through ISP procedure. In System Programming (ISP) function enables user to update program memory when chip is soldered on PCB. After chip powered on Cortex-M0 CPU fetches code from APROM or LDROM decided by boot select (CBS) in Config0. By the way, the NuMicro Mini51™ series also provides DATA Flash Region, where the data flash is shared with original program memory and its start address is configurable and defined by user in Config1. The data flash size is defined by user depending on the application request.

5.7.2 Features

- Compatible with AHB interface
- Running up to 24 MHz with zero wait state for discontinuous address read access
- 4K/8K/16KB application program memory (APROM)
- 2KB in system programming (ISP) loader program memory (LDROM)
- Programmable data flash start address and memory size with 512 bytes page erase unit
- In System Program (ISP) to update on chip Flash EPROM

5.7.3 Block Diagram

The flash memory controller consists of AHB slave interface, ISP control logic, writer interface and flash macro interface timing control logic. The block diagram of flash memory controller is shown in the following figure.

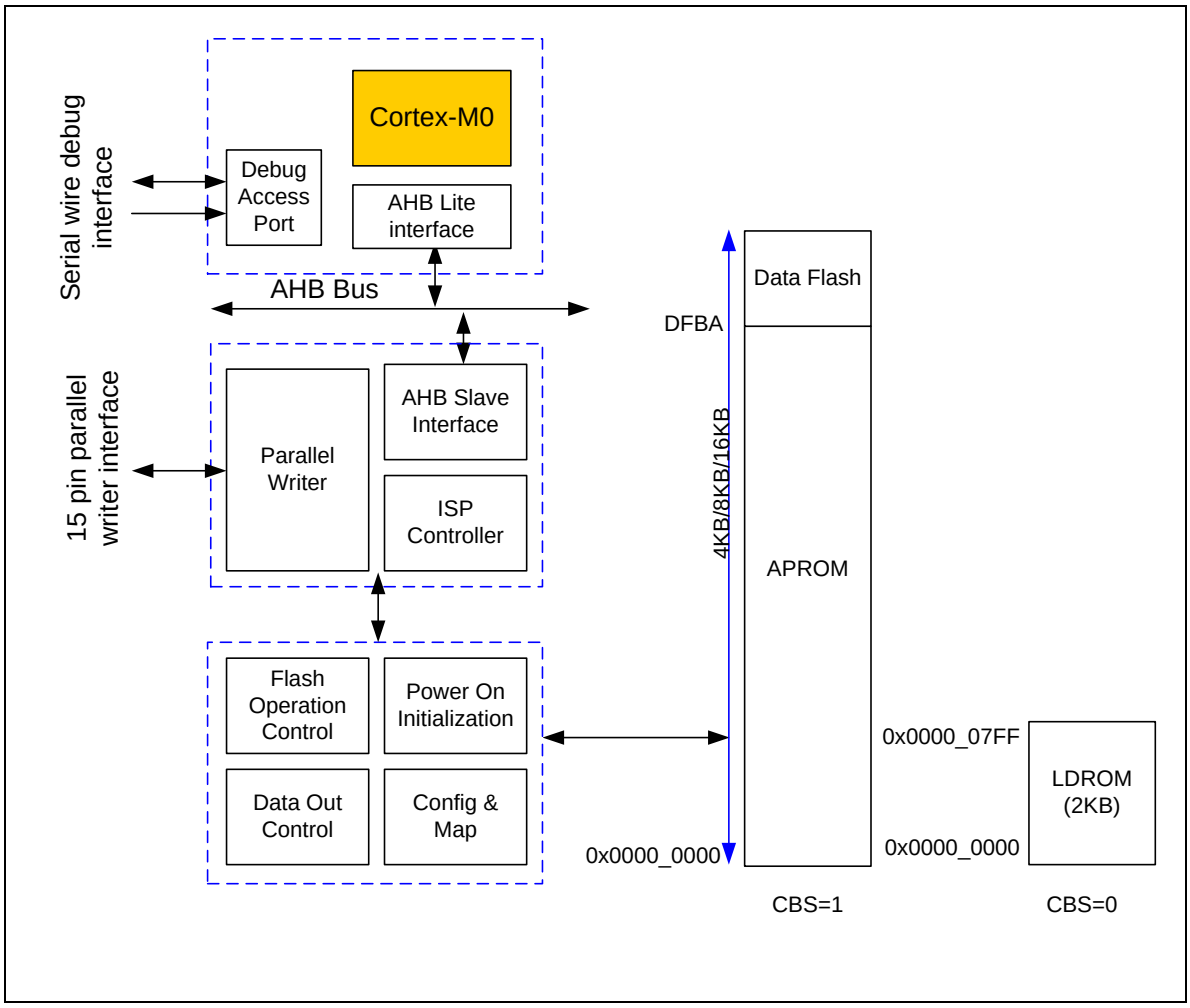

Figure 5.7-1 Flash Memory Control Block Diagram

The Flash memory organization is shown below:

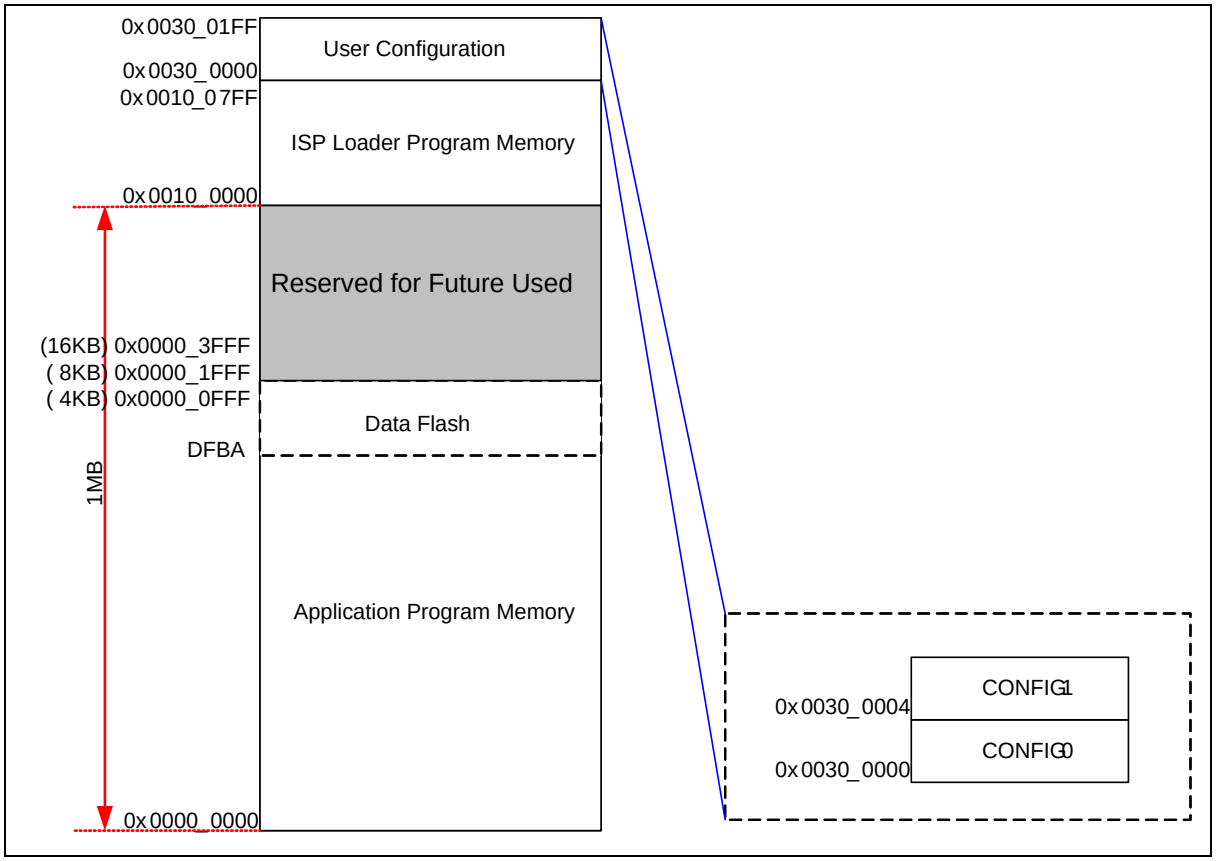

Figure 5.7-2 Flash Memory Organization

5.7.4.2 Boot Selection

The NuMicro Mini51™ provides in system programming (ISP) feature for user to update program memory when chip is mounted on PCB. A dedicated 2KB program memory is used to store ISP firmware. User can select to start program fetch from APROM or LDROM by (CBS) in Config0. There are two kinds of mapping for booting selection.

Table 5.7-2 Boot Selection Table

CBS	Boot Selection
1	CPU booting from APROM, flash access range including APROM and Data Flash; LDROM cannot be accessed directly, except through ISP. APROM is write-protected in this mode.
0	CPU booting from LDROM, flash access range only LDROM 2KB; APROM cannot be accessed directly, except through ISP. APROM can be updated in this mode.

5.7.4.3 Data Flash

The NuMicro Mini51™ provides data flash for user to store data which is read/written through the ISP procedure. The size of each erase unit is 512 bytes. When a word will be changed, all 128 words need to be copied to another page or SRAM in advance. The data flash base address is defined by DFBA if DFEN bit in Config0 is enabled. For example, for 4K/2K/1K/0KB data flash, the DFBA setting value is listed in the following table.

Table 5.7-3 Data Flash Table

Data Flash	4KB (DFEN=0)	2KB (DFEN=0)	1KB (DFEN=0)	0KB (DFEN=1)
16K Flash	DFBA=0x0000_3000	DFBA=0x0000_3800	DFBA=0x0000_3C00	DFEN=1
8K Flash	DFBA=0x0000_1000	DFBA=0x0000_1800	DFBA=0x0000_1C00	DFEN=1
4K Flash	Forbidden	DFBA=0x0000_0800	DFBA=0x0000_0C00	DFEN=1

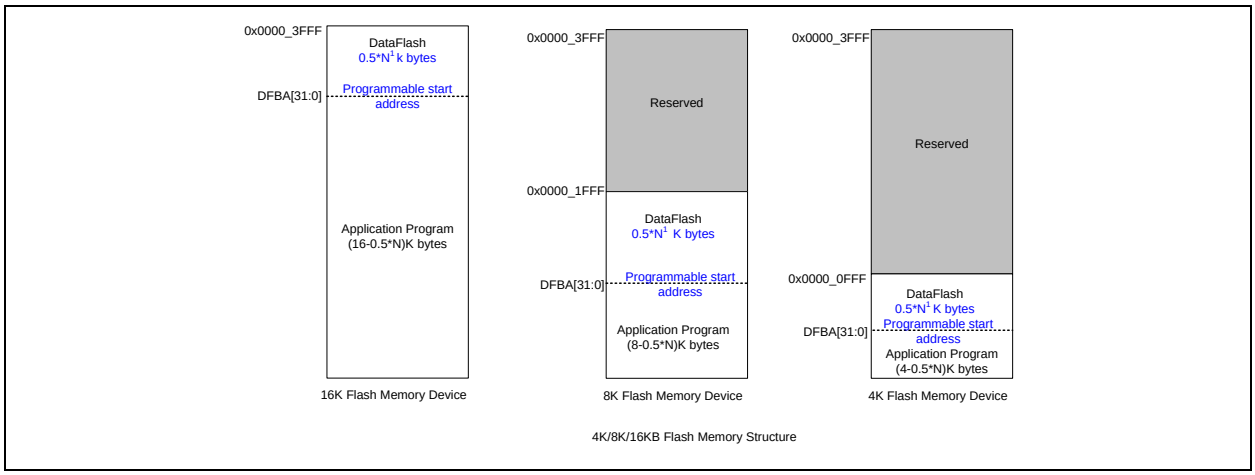

Figure 5.7-3 Flash Memory Structure

5.7.4.4 User Configuration

Config0 (Address = 0x0030_0000)

31	30	29	28	27	26	25	24
-			CKF	-			
23	**22**	**21**	**20**	**19**	**18**	**17**	**16**
-	CBOV		CBORST	-			
15	**14**	**13**	**12**	**11**	**10**	**9**	**8**
-							
7	**6**	**5**	**4**	**3**	**2**	**1**	**0**
CBS	-					LOCK	DFEN

Bits	Description	
[31:29]	-	**Reserved**
[28]	**CKF**	**HXT/LXT Clock Filter Enable** 0 = HXT/LXT clock filter Disabled. 1 = HXT/LXT clock filter Enabled.
[27:23]	-	**Reserved**
[22:21]	**CBOV[1:0]**	**Brown-out Voltage Selection** CBOV[1] / CBOV[0] / Brown-out voltage 1 / 1 / Disable 2.7V/3.8V 1 / 0 / 3.8V 0 / 1 / 2.7V 0 / 0 / 2.7V **Note**: Enabling LVR2V or not when Power-down depends on CBOD2VEN bit.
[20]	**CBORST**	**Brown-out Reset Enable** 0 = Brown-out reset Enabled after power on. 1 = Brown-out reset Disabled after power on.
[19:8]	-	**Reserved**
[7]	**CBS**	**Configured Boot Selection** **CBS** / **Boot Selection** 1 / CPU booting from APROM, flash access range including APROM Flash; LDROM cannot be accessed directly, except through ISP. APROM is write-protected in this mode. 0 / CPU booting from LDROM, flash access range only LDROM 2KB cannot be accessed directly, except through ISP. APROM can be updated in this mode.

Bits	Description	
[6:2]	-	**Reserved**
[1]	**LOCK**	**Security Lock** 0 = Flash data locked. 1 = Flash data unlocked. When flash data is locked, only device ID, unique ID, Config0 and Config1 can be read by writer and ICP through serial debug interface. Other data is locked as 0xFFFFFFFF. ISP can read data anywhere regardless of the LOCK bit value.
[0]	**DFEN**	**Data Flash Enable** 0 = Data flash Enabled. 1 = Data flash Disabled.

Config1 (Address = 0x0030_0004)

31	30	29	28	27	26	25	24
-							
23	**22**	**21**	**20**	**19**	**18**	**17**	**16**
-						DFBA	
15	**14**	**13**	**12**	**11**	**10**	**9**	**8**
DFBA							
7	**6**	**5**	**4**	**3**	**2**	**1**	**0**
DFBA							

Bits	Description	
[31:18]	-	**Reserved**
[17:0]	**DFBA[17:0]**	**Data Flash Base Address** The data flash base address is defined by user. Since on chip flash erase unit is 512 bytes, it is mandatory to keep bit 8-0 as “0”.

Example:

Table 5.7-4 Data Flash Configuration Example

Data Flash	4KB (DFEN=0)	2KB (DFEN=0)	1KB (DFEN=0)	0KB (DFEN=1)
16K Flash	DFBA=0x0000_3000	DFBA=0x0000_3800	DFBA=0x0000_3C00	DFEN=1
8K Flash	DFBA=0x0000_1000	DFBA=0x0000_1800	DFBA=0x0000_1C00	DFEN=1
4K Flash	Forbidden	DFBA=0x0000_0800	DFBA=0x0000_0C00	DFEN=1

5.7.4.5 In System Program (ISP)

The program memory and data flash supports both in hardware programming and in system programming (ISP). Hardware programming mode uses gang-writers to reduce programming costs and time to market while the products enter into the mass production state. However, if the product is just under development or the end product needs firmware updating in the hand of an end user, the hardware programming mode will make repeated programming difficult and inconvenient. ISP method makes it easy and possible. The NuMicro Mini51™ supports ISP mode which allows a device to be reprogrammed under software control. Furthermore, the capability to update the application firmware makes a wide range of applications possible.

ISP is performed without removing the microcontroller from the system. Various interfaces enable LDROM firmware to get new program code easily. The most common method to perform ISP is via UART along with the firmware in LDROM. General speaking, PC transfers the new APROM code through serial port. Then LDROM firmware receives it and re-programs into APROM through ISP commands. Nuvoton provides ISP firmware and PC application program for NuMicro Mini51™. It is quite easy to perform ISP through Nuvoton ISP tool.

ISP Procedure

The NuMicro Mini51™ supports booting from APROM or LDROM initially defined by user configuration bit (CBS). To update application program in APROM, write BS=1 and start software reset to make chip boot from LDROM. The first step to start ISP function is write ISPEN bit to “1”. Software is required to write RegLockAddr register in Global Control Register (GCR, 0x5000_0100) with 0x59, 0x16 and 0x88 before writing ISPCON register. This procedure is used to protect flash memory from destroying owing to unintended write during power on/off duration.

Several error conditions are checked after software writes ISPGO bit. If error condition occurs, ISP operation is not been started and ISP fail flag will be set instead. ISPFF flag is cleared by software, and it will not be overwritten in next ISP operation. The next ISP procedure can be started even ISPFF bit keeps as “1”. It is recommended that software checks ISPFF bit and clears it after each ISP operation if it is set to “1”.

When ISPGO bit is set, CPU will wait for ISP operation finish during this period; peripheral still keeps working as usual. If an interrupt request occurs, CPU will not service it until ISP operation finishes.

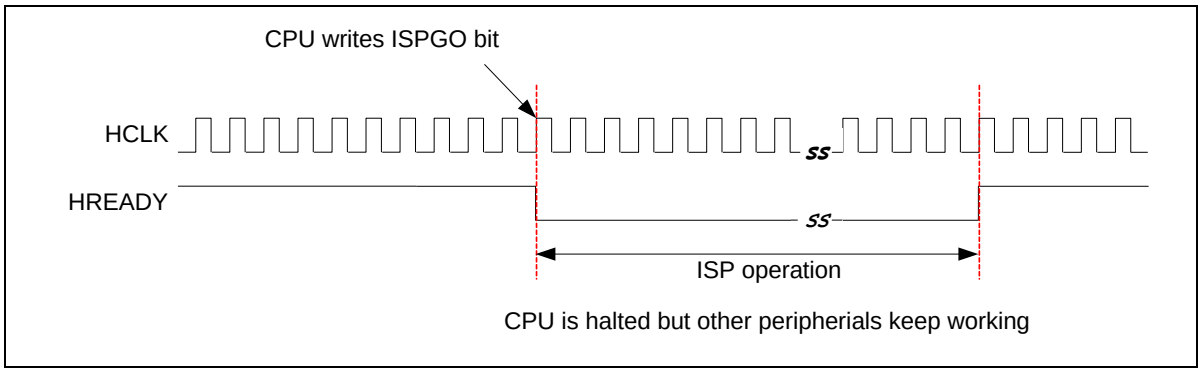

Figure 5.7-4 ISP Procedure

Note: The NuMicro Mini51™ allows user to update CONFIG value by ISP.

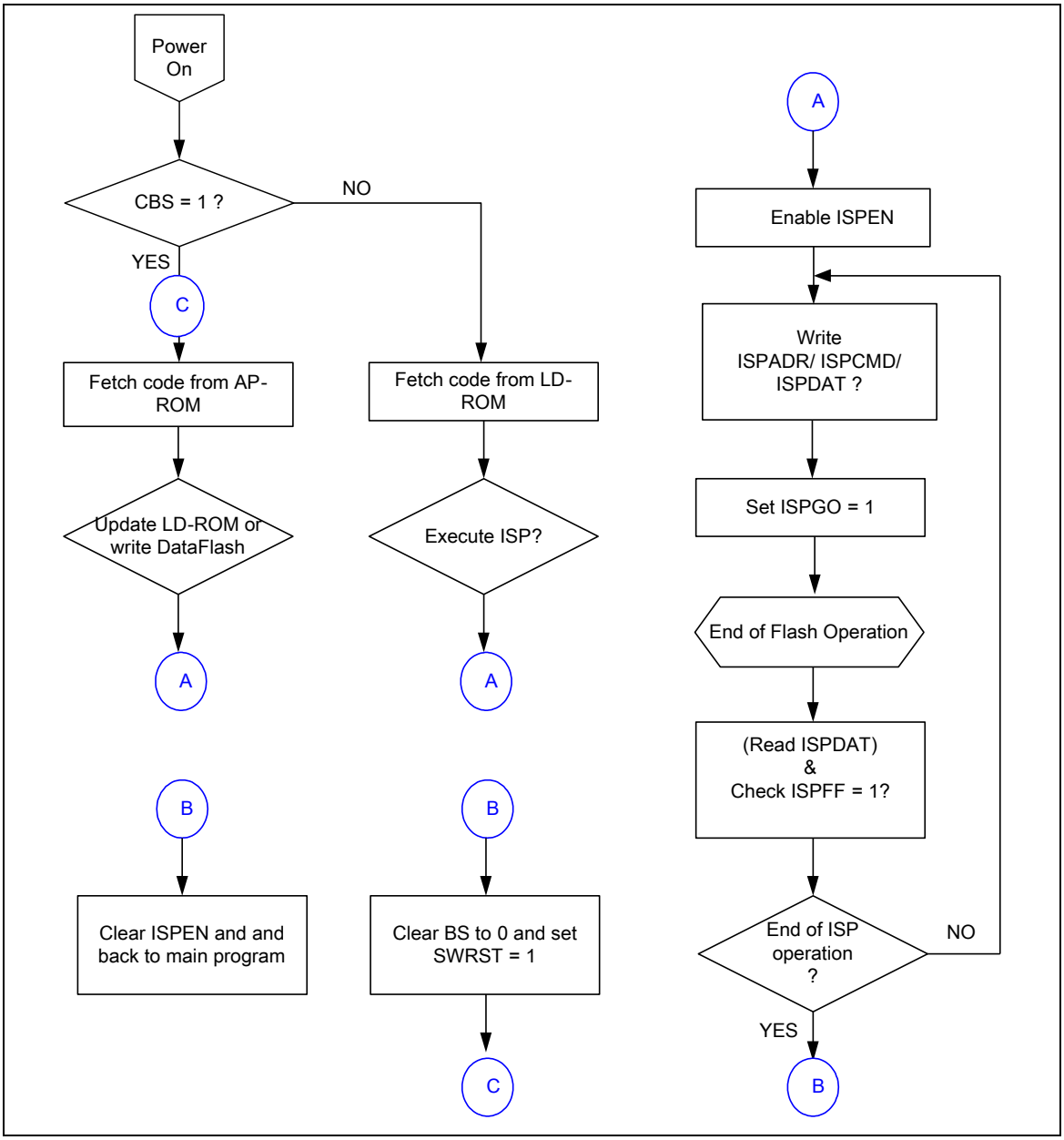

Figure 5.7-5 ISP Operation Flow

Table 5.7-5 ISP Command Table

ISP Mode	ISPCMD			ISPADR			ISPDAT
	FOEN	**FCEN**	**FCTRL[3:0]**	**A21**	**A20**	**A[19:0]**	**D[31:0]**
Standby	1	1	x	x	x	x	x
Read Company ID	0	0	1011	x	x	x	Data out D[31:0] = 0x0000_00DA
Read Device ID	0	0	1100	x	x	Address in A[19:0] = 0x00000	Data out D[31:0] = Device ID
Read Unique ID	0	0	0100	x	x	Address in A[19:0] = 0x00000 0x00004 0x00008	Data out D[31:0] = Unique ID
FLASH Page Erase	1	0	0010	0	A20	Address in A[19:0]	x
FLASH Program	1	0	0001	0	A20	Address in A[19:0]	Data in D[31:0]
FLASH Read	0	0	0000	0	A20	Address in A[19:0]	Data out D[31:0]
CONFIG Page Erase	1	0	0010	1	1	Address in A[19:0]	x
CONFIG Program	1	0	0001	1	1	Address in A[19:0]	Data in D[31:0]
CONFIG Read	0	0	0000	1	1	Address in A[19:0]	Data out D[31:0]

5.7.5 Flash Control Register Map

R: read only, **W**: write only, **R/W**: both read and write

Register	Offset	R/W	Description	Reset Value
FMC_BA = 0x5000_C000				
ISPCON	FMC_BA+0x00	R/W	ISP Control Register	0x0000_0000
ISPADR	FMC_BA+0x04	R/W	ISP Address Register	0x0000_0000
ISPDAT	FMC_BA+0x08	R/W	ISP Data Register	0x0000_0000
ISPCMD	FMC_BA+0x0C	R/W	ISP Command Register	0x0000_0000
ISPTRG	FMC_BA+0x10	R/W	ISP Trigger Register	0x0000_0000
DFBA	FMC_BA+0x14	R	Data Flash Start Address	0x0000_3800

5.7.6 Flash Control Register

ISP Control Register (ISPCON)

Register	Offset	R/W	Description	Reset Value
ISPCON	FMC_BA+0x00	R/W	ISP Control Register	0x0000_0000

31	30	29	28	27	26	25	24
-							
23	22	21	20	19	18	17	16
-							
15	14	13	12	11	10	9	8
-	ET			-	PT		
7	6	5	4	3	2	1	0
SWRST	ISPFF	LDUEN	CFGUEN			BS	ISPEN

Bits	Description	
[31:15]	-	**Reserved**
[14:12]	**ET[2:0]**	**Flash Erase Time** ET[2] ET[1] ET[0] Erase Time (ms) 0 0 0 20 (default) 0 0 1 25 0 1 0 30 0 1 1 35 1 0 0 3 1 0 1 5 1 1 0 10 1 1 1 15
[11]	-	**Reserved**

Bits	Description	
[10:8]	**PT[2:0]**	**Flash Program Time** <table><tr><th>PT[2]</th><th>PT[1]</th><th>PT[0]</th><th>Program Time (us)</th></tr><tr><td>0</td><td>0</td><td>0</td><td>40</td></tr><tr><td>0</td><td>0</td><td>1</td><td>45</td></tr><tr><td>0</td><td>1</td><td>0</td><td>50</td></tr><tr><td>0</td><td>1</td><td>1</td><td>55</td></tr><tr><td>1</td><td>0</td><td>0</td><td>20</td></tr><tr><td>1</td><td>0</td><td>1</td><td>25</td></tr><tr><td>1</td><td>1</td><td>0</td><td>30</td></tr><tr><td>1</td><td>1</td><td>1</td><td>35</td></tr></table>
[7]	**SWRST**	**Software Reset** Writing “1” to this bit to start software reset. It is cleared by hardware after reset is finished.
[6]	**ISPFF**	**ISP Fail Flag** This bit is set by hardware when a triggered ISP meets any of the following conditions: (1) APROM writes to itself. (2) LDROM writes to itself. (3) CONFIG is erased/programmed when the MCU is running in APROM. (4) Destination address is illegal, such as over an available range. Write “1” to clear.
[5]	**LDUEN**	**LDROM Update Enable** 1 = LDROM can be updated when the MCU runs in APROM. 0 = LDROM cannot be updated.
[4]	**CFGUEN**	**Enable Config-bits Update by ISP** 1 = Enable ISP can update config-bits. 0 = Disable ISP can update config-bits.
[3:2]	**-**	**Reserved**
[1]	**BS**	**Boot Selection** Set/clear this bit to select next booting from LDROM/APROM, respectively. This bit also functions as MCU booting status flag, which can be used to check where MCU booted from. This bit is initiated with the inversed value of CBS in Config0 after power-on reset; It keeps the same value at other reset. 1 = Boot from LDROM. 0 = Boot from APROM.

Bits	Description	
[0]	**ISPEN**	**ISP Enable** ISP function enable bit. Set this bit to enable ISP function. 1 = ISP function Enabled. 0 = ISP function Disabled.

ISP Address (ISPADR)

Register	Offset	R/W	Description	Reset Value
ISPADR	FMC_BA+0x04	R/W	ISP Address Register	0x0000_0000

31	30	29	28	27	26	25	24
ISPADR							
23	**22**	**21**	**20**	**19**	**18**	**17**	**16**
ISPADR							
15	**14**	**13**	**12**	**11**	**10**	**9**	**8**
ISPADR							
7	**6**	**5**	**4**	**3**	**2**	**1**	**0**
ISPADR							

Bits	Description	
[31:0]	**ISPADR[31:0]**	**ISP Address** The NuMicro Mini51™ series supports word program only. ISPADR[1:0] must be kept 00 for ISP operation.

ISPDAT (ISP Data Register)

Register	Offset	R/W	Description	Reset Value
ISPDAT	FMC_BA+0x08	R/W	ISP Data Register	0x0000_0000

31	30	29	28	27	26	25	24
ISPDAT							
23	**22**	**21**	**20**	**19**	**18**	**17**	**16**
ISPDAT							
15	**14**	**13**	**12**	**11**	**10**	**9**	**8**
ISPDAT							
7	**6**	**5**	**4**	**3**	**2**	**1**	**0**
ISPDAT							

Bits	Description	
[31:0]	**ISPDAT[31:0]**	**ISP Data** Write data to this register before ISP program operation. Read data from this register after ISP read operation.

ISP Command (ISPCMD)

Register	Offset	R/W	Description	Reset Value
ISPCMD	FMC_BA+0x0C	R/W	ISP Command Register	0x0000_0000

31	30	29	28	27	26	25	24
-							
23	**22**	**21**	**20**	**19**	**18**	**17**	**16**
-							
15	**14**	**13**	**12**	**11**	**10**	**9**	**8**
-							
7	**6**	**5**	**4**	**3**	**2**	**1**	**0**
-		FOEN	FCEN	FCTRL			

Bits	Description	
[31:6]	**-**	**Reserved**
[5:0]	**FOEN, FCEN, FCTRL[3:0]**	**ISP Command** ISP command is the same as writer mode except whole chip erase is not supported.

Operation Mode	FOEN	FCEN	FCTRL[3:0]			
Read	0	0	0	0	0	0
Program	1	0	0	0	0	1
Page Erase	1	0	0	0	1	0
Read CID	0	0	1	0	1	1
Read DID	0	0	1	1	0	0
Read UID	0	0	0	1	0	0

ISP Trigger Control Register (ISPTRG)

Register	Offset	R/W	Description	Reset Value
ISPTRG	FMC_BA+0x10	R/W	ISP Trigger Control Register	0x0000_0000

31	30	29	28	27	26	25	24
-							
23	**22**	**21**	**20**	**19**	**18**	**17**	**16**
-							
15	**14**	**13**	**12**	**11**	**10**	**9**	**8**
-							
7	**6**	**5**	**4**	**3**	**2**	**1**	**0**
-							**ISPGO**

Bits	Description	
[31:1]	**-**	**Reserved**
[0]	**ISPGO**	**ISP Start Trigger** Write "1" to start ISP operation; this bit will be cleared to "0" by hardware automatically when ISP operation is finished. 1 = ISP on going. 0 = ISP operation finished.

Data Flash Base Address Register (DFBA)

Register	Offset	R/W	Description	Reset Value
DFBA	FMC_BA+0x14	R	Data flash Base Address	0x0000_3800

31	30	29	28	27	26	25	24
DFBA							
23	**22**	**21**	**20**	**19**	**18**	**17**	**16**
DFBA							
15	**14**	**13**	**12**	**11**	**10**	**9**	**8**
DFBA							
7	**6**	**5**	**4**	**3**	**2**	**1**	**0**
DFBA							

Bits	Description	
[31:0]	**DFBA[31:0]**	**Data Flash Base Address** This register indicates data flash start address. It is a read only register. The data flash start address is defined by user. Since on chip flash erase unit is 512 bytes, it is mandatory to keep bit 8-0 as “0”.

Example:

Data Flash	4KB (DFEN=0)	2KB (DFEN=0)	1KB (DFEN=0)	0KB (DFEN=1)
16K Flash	DFBA=0x0000_3000	DFBA=0x0000_3800	DFBA=0x0000_3C00	DFEN=1
8K Flash	DFBA=0x0000_1000	DFBA=0x0000_1800	DFBA=0x0000_1C00	DFEN=1
4K Flash	Forbidden	DFBA=0x0000_0800	DFBA=0x0000_0C00	DFEN=1

5.8 General Purpose I/O

5.8.1 Overview

There are 30 General Purpose I/O pins shared with special feature functions in this MCU. The 30 pins are arranged in 6 ports named P0, P1, P2, P3, P4 and P5. Each of the 30 pins is independent and has the corresponding register bits to control the pin mode function and data.

The I/O type of each I/O pin can be independently software configured as input, output, open-drain, or Quasi-bidirectional mode. After reset, the I/O type of all pins stay in input mode and port data register Px_DOUT[n] resets to "1". For Quasi-bidirectional mode, each I/O pin is equipped with a very weak individual pull-up resistor about 110KΩ ~ 300KΩ for VDD from 5.0V to 2.5V.

5.8.2 Features

- Four I/O modes:
  - Quasi bi-direction
  - Push-Pull output
  - Open-Drain output
  - Input-only with high impendence
- TTL/Schmitt trigger input selectable
- I/O pin can be configured as interrupt source with edge/level setting
- High driver and high sink IO mode support

5.8.3 Functional Description

5.8.3.1 Input Mode

When Px_PMD (PMDn[1:0]) is set to 00, the Px[n] pin is in Input mode and the I/O pin is in tri-state (high impedance) without output drive capability. The Px_PIN value reflects the status of the corresponding port pins.

5.8.3.2 Output Mode

When Px_PMD (PMDn[1:0]) is set to 01, the Px[n] pin is in Output mode and the I/O pin supports digital output function with source/sink current capability. The bit value in the corresponding bit [n] of Px_DOUT is driven on the pin.

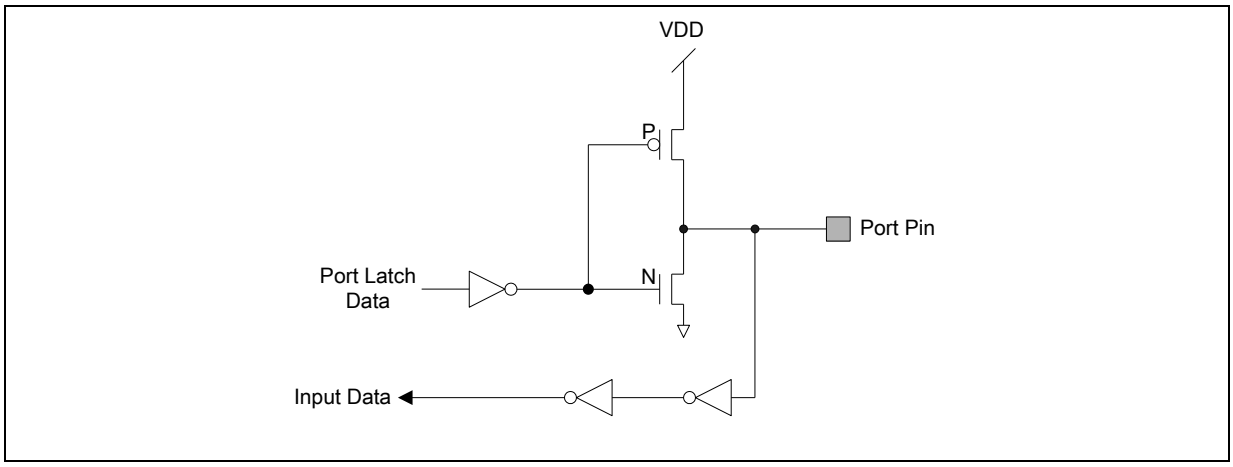

Figure 5.8-1 Push-Pull Output

5.8.3.3 Open-drain Mode

When Px_PMD (PMDn[1:0]) is set to 10, the Px[n] pin is in Open-Drain mode and the digital output function of I/O pin supports only sink current capability, and an additional pull-up register is needed for driving high state. If the bit value in the corresponding bit [n] of Px_DOUT is “0”, the pin drives a “low” output on the pin. If the bit value in the corresponding bit [n] of Px_DOUT is “1”, the pin output drives high that is controlled by the internal pull-up resistor or the external pull high resistor.

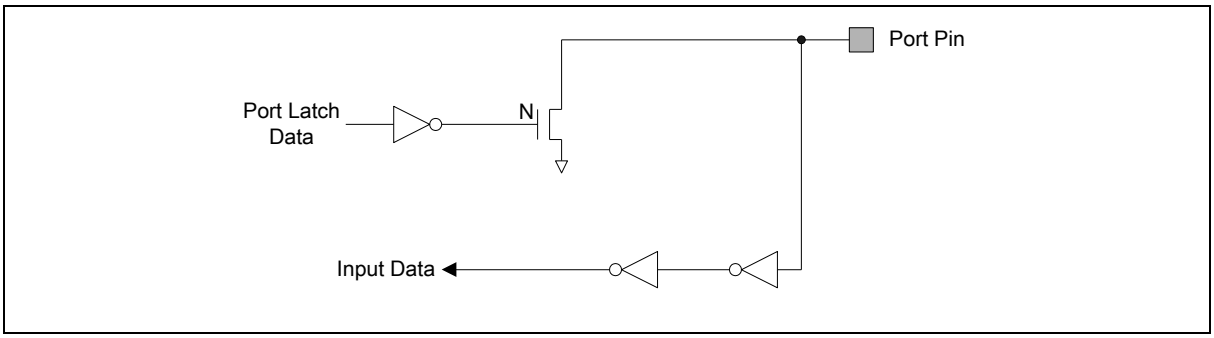

Figure 5.8-2 Open-Drain Output

5.8.3.4 Quasi-bidirectional Mode

When Px_PMD (PMDn[1:0]) is set to “11”, the Px[n] pin is in Quasi-bidirectional mode and the I/O pin supports digital output and input function at the same time but the source current is only up to hundreds uA. Before the digital input function is performed the corresponding bit in Px_DOUT must be set to “1”. The quasi-bidirectional output is common on the 80C51 and most of its derivatives. If the bit value in the corresponding bit [n] of Px_DOUT is “0”, the pin drive a “low” output on the pin. If the bit value in the corresponding bit [n] of Px_DOUT is “1”, the pin will check the pin value. If pin value is high, no action takes. If pin state is low, then pin will drive strong high with 2 clock cycles on the pin and then disable the strong output drive and then the pin status is controlled by internal pull-up resistor. Note that the source current capability in Quasi-bidirectional mode is only about 200uA to 30uA for VDD is from 5.0V to 2.5V.

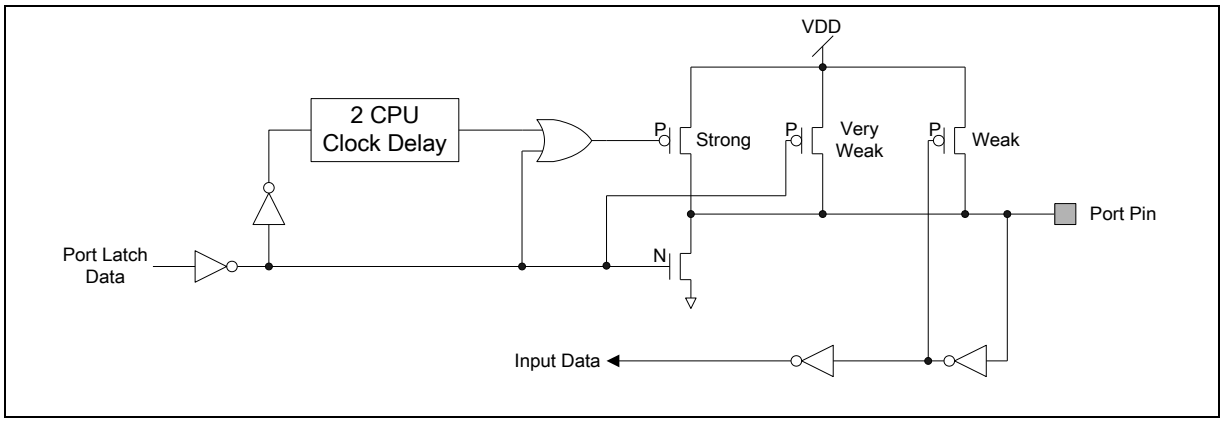

Figure 5.8-3 Quasi-bidirectional I/O Mode

5.8.4 Port 0-5 Control Register Map

R: read only, **W:** write only, **R/W:** both read and write

Register	Offset	R/W	Description	Reset Value
GP_BA = 0x5000_4000				
P0_PMD	GP_BA+0x000	R/W	P0 Pin I/O Mode Control	0x0000_0000
P0_OFFD	GP_BA+0x004	R/W	P0 Pin OFF Digital Enable	0x0000_0000
P0_DOUT	GP_BA+0x008	R/W	P0 Data Output Value	0x0000_00F3
P0_DMASK	GP_BA+0x00C	R/W	P0 Data Output Write Mask	0x0000_0000
P0_PIN	GP_BA+0x010	R	P0 Pin Value	0x0000_00XX
P0_DBEN	GP_BA+0x014	R/W	P0 De-bounce Enable	0x0000_0000
P0_IMD	GP_BA+0x018	R/W	P0 Interrupt Mode Control	0x0000_0000
P0_IEN	GP_BA+0x01C	R/W	P0 Interrupt Enable	0x0000_0000
P0_ISRC	GP_BA+0x020	R/W	P0 Interrupt Trigger Source Indicator	0x0000_0000
P1_PMD	GP_BA+0x040	R/W	P1 Pin Mode Enable	0x0000_0000
P1_OFFD	GP_BA+0x044	R/W	P1 Pin OFF Digital Enable	0x0000_0000
P1_DOUT	GP_BA+0x048	R/W	P1 Data Output Value	0x0000_003D
P1_DMASK	GP_BA+0x04C	R/W	P1 Data Output Write Mask	0x0000_0000
P1_PIN	GP_BA+0x050	R	P1 Pin Value	0x0000_00XX
P1_DBEN	GP_BA+0x054	R/W	P1 De-bounce Enable	0x0000_0000
P1_IMD	GP_BA+0x058	R/W	P1 Interrupt Mode Control	0x0000_0000
P1_IEN	GP_BA+0x05C	R/W	P1 Interrupt Enable	0x0000_0000
P1_ISRC	GP_BA+0x060	R/WC	P1 Interrupt Source Flag	0x0000_0000
P2_PMD	GP_BA+0x080	R/W	P2 Pin Mode Enable	0x0000_0000
P2_OFFD	GP_BA+0x084	R/W	P2 Pin OFF Digital Enable	0x0000_0000
P2_DOUT	GP_BA+0x088	R/W	P2 Data Output Value	0x0000_007C
P2_DMASK	GP_BA+0x08C	R/W	P2 Data Output Write Mask	0x0000_0000
P2_PIN	GP_BA+0x090	R	P2 Pin Value	0x0000_00XX
P2_DBEN	GP_BA+0x094	R/W	P2 De-bounce Enable	0x0000_0000
P2_IMD	GP_BA+0x098	R/W	P2 Interrupt Mode Control	0x0000_0000
P2_IEN	GP_BA+0x09C	R/W	P2 Interrupt Enable	0x0000_0000

Register	Offset	R/W	Description	Reset Value
GP_BA = 0x5000_4000				
P2_ISRC	GP_BA+0x0A0	R/W	P2 Interrupt Trigger Source Indicator	0x0000_0000
P3_PMD	GP_BA+0x0C0	R/W	P3 Pin Mode Enable	0x0000_0000
P3_OFFD	GP_BA+0x0C4	R/W	P3 Pin OFF Digital Enable	0x0000_0000
P3_DOUT	GP_BA+0x0C8	R/W	P3 Data Output Value	0x0000_0077
P3_DMASK	GP_BA+0x0CC	R/W	P3 Data Output Write Mask	0x0000_0000
P3_PIN	GP_BA+0x0D0	R	P3 Pin Value	0x0000_00XX
P3_DBEN	GP_BA+0x0D4	R/W	P3 De-bounce Enable	0x0000_0000
P3_IMD	GP_BA+0x0D8	R/W	P3 Interrupt Mode Control	0x0000_0000
P3_IEN	GP_BA+0x0DC	R/W	P3 Interrupt Enable	0x0000_0000
P3_ISRC	GP_BA+0x0E0	R/W	P3 Interrupt Trigger Source Indicator	0x0000_0000
P4_PMD	GP_BA+0x100	R/W	P4 Pin Mode Enable	0x0000_0000
P4_OFFD	GP_BA+0x104	R/W	P4 Pin OFF Digital Enable	0x0000_0000
P4_DOUT	GP_BA+0x108	R/W	P4 Data Output Value	0x0000_00C0
P4_DMASK	GP_BA+0x10C	R/W	P4 Data Output Write Mask	0x0000_0000
P4_PIN	GP_BA+0x110	R	P4 Pin Value	0x0000_00XX
P4_DBEN	GP_BA+0x114	R/W	P4 De-bounce Enable	0x0000_0000
P4_IMD	GP_BA+0x118	R/W	P4 Interrupt Mode Control	0x0000_0000
P4_IEN	GP_BA+0x11C	R/W	P4 Interrupt Enable	0x0000_0000
P4_ISRC	GP_BA+0x120	R/W	P4 Interrupt Trigger Source Indicator	0x0000_0000
P5_PMD	GP_BA+0x140	R/W	P5 Pin Mode Control	0x0000_0000
P5_OFFD	GP_BA+0x144	R/W	P5 Pin OFF Digital Enable	0x0000_0000
P5_DOUT	GP_BA+0x148	R/W	P5 Data Output Value	0x0000_003F
P5_DMASK	GP_BA+0x14C	R/W	P5 Data Output Write Mask	0x0000_0000
P5_PIN	GP_BA+0x150	R	P5 Pin Value	0x0000_00XX
P5_DBEN	GP_BA+0x154	R/W	P5 De-bounce Enable	0x0000_0000
P5_IMD	GP_BA+0x158	R/W	P5 Interrupt Mode Control	0x0000_0000
P5_IEN	GP_BA+0x15C	R/W	P5 Interrupt Enable	0x0000_0000
P5_ISRC	GP_BA+0x160	R/W	P5 Interrupt Trigger Source Indicator	0x0000_0000
DBNCECON	GP_BA+0x180	R/W	Interrupt De-bounce Cycle Control	0x0000_0020

Register	Offset	R/W	Description	Reset Value
GP_BA = 0x5000_4000				
P00_DOUT	GP_BA+0x200	R/W	P0.0 Data Output Value	0x0000_0001
P01_DOUT	GP_BA+0x204	R/W	P0.1 Data Output Value	0x0000_0001
P04_DOUT	GP_BA+0x210	R/W	P0.4 Data Output Value	0x0000_0001
P05_DOUT	GP_BA+0x214	R/W	P0.5 Data Output Value	0x0000_0001
P06_DOUT	GP_BA+0x218	R/W	P0.6 Data Output Value	0x0000_0001
P07_DOUT	GP_BA+0x21C	R/W	P0.7 Data Output Value	0x0000_0001
P10_DOUT	GP_BA+0x220	R/W	P1.0 Data Output Value	0x0000_0001
P12_DOUT	GP_BA+0x228	R/W	P1.2 Data Output Value	0x0000_0001
P13_DOUT	GP_BA+0x22C	R/W	P1.3 Data Output Value	0x0000_0001
P14_DOUT	GP_BA+0x230	R/W	P1.4 Data Output Value	0x0000_0001
P15_DOUT	GP_BA+0x234	R/W	P1.5 Data Output Value	0x0000_0001
P22_DOUT	GP_BA+0x248	R/W	P2.2 Data Output Value	0x0000_0001
P23_DOUT	GP_BA+0x24C	R/W	P2.3 Data Output Value	0x0000_0001
P24_DOUT	GP_BA+0x250	R/W	P2.4 Data Output Value	0x0000_0001
P25_DOUT	GP_BA+0x254	R/W	P2.5 Data Output Value	0x0000_0001
P26_DOUT	GP_BA+0x258	R/W	P2.6 Data Output Value	0x0000_0001
P30_DOUT	GP_BA+0x260	R/W	P3.0 Data Output Value	0x0000_0001
P31_DOUT	GP_BA+0x264	R/W	P3.1 Data Output Value	0x0000_0001
P32_DOUT	GP_BA+0x268	R/W	P3.2 Data Output Value	0x0000_0001
P34_DOUT	GP_BA+0x270	R/W	P3.4 Data Output Value	0x0000_0001
P35_DOUT	GP_BA+0x274	R/W	P3.5 Data Output Value	0x0000_0001
P36_DOUT	GP_BA+0x278	R/W	P3.6 Data Output Value	0x0000_0001
P46_DOUT	GP_BA+0x298	R/W	P4.6 Data Output Value	0x0000_0001
P47_DOUT	GP_BA+0x29C	R/W	P4.7 Data Output Value	0x0000_0001
P50_DOUT	GP_BA+0x2A0	R/W	P5.0 Data Output Value	0x0000_0001
P51_DOUT	GP_BA+0x2A4	R/W	P5.1 Data Output Value	0x0000_0001
P52_DOUT	GP_BA+0x2A8	R/W	P5.2 Data Output Value	0x0000_0001
P53_DOUT	GP_BA+0x2AC	R/W	P5.3 Data Output Value	0x0000_0001

Register	Offset	R/W	Description	Reset Value
GP_BA = 0x5000_4000				
P54_DOUT	GP_BA+0x2B0	R/W	P5.4 Data Output Value	0x0000_0001
P55_DOUT	GP_BA+0x2B4	R/W	P5.5 Data Output Value	0x0000_0001

Note: Software must set the un-bonding out pin P5.5 to output mode when using QFN-33 package IC to minimize the power-down consumption.

5.8.5 Port 0-5 Control Register

Port 0-5 Pin I/O Mode Control (Px_PMD)

Register	Offset	R/W	Description	Reset Value
P0_PMD	GP_BA+0x000	R/W	P0 Pin I/O Mode Control	0x0000_0000
P1_PMD	GP_BA+0x040	R/W	P1 Pin I/O Mode Control	0x0000_0000
P2_PMD	GP_BA+0x080	R/W	P2 Pin I/O Mode Control	0x0000_0000
P3_PMD	GP_BA+0x0C0	R/W	P3 Pin I/O Mode Control	0x0000_0000
P4_PMD	GP_BA+0x100	R/W	P4 Pin I/O Mode Control	0x0000_0000
P5_PMD	GP_BA+0x140	R/W	P5 Pin I/O Mode Control	0x0000_0000

31	30	29	28	27	26	25	24
-							
23	**22**	**21**	**20**	**19**	**18**	**17**	**16**
-							
15	**14**	**13**	**12**	**11**	**10**	**9**	**8**
PMD7		**PMD6**		**PMD5**		**PMD4**	
7	**6**	**5**	**4**	**3**	**2**	**1**	**0**
PMD3		**PMD2**		**PMD1**		**PMD0**	

Bits	Description	
[31:16]	**-**	**Reserved**
[2n+1:2n]	**PMDn**	**Px Pin[n] I/O Mode Control** Determine each I/O type of Px pin[n].

PMDn[1:0]	Pin I/O Mode (x = 0~5, n = 0~7)
00	Px pin[n] is in INPUT mode.
01	Px pin[n] is in OUTPUT mode.
10	Px pin[n] is in Open-Drain mode.
11	Px pin[n] is in Quasi-bidirectional mode.

Note:

P0_PMD[7:4] are reserved.

P1_PMD[15:12], [3:2] are reserved.

P2_PMD[15:14], [3:0] are reserved.

P3_PMD[15:14], [7:6] are reserved.

Bits	Description
P4_PMD[11:0] are reserved. P5_PMD[15:12] are reserved.	

Port 0-5 Pin OFF Digital Enable (Px_OFFD)

Register	Offset	R/W	Description	Reset Value
P0_OFFD	GP_BA+0x004	R/W	P0 Pin OFF Digital Enable	0x0000_0000
P1_OFFD	GP_BA+0x044	R/W	P1 Pin OFF Digital Enable	0x0000_0000
P2_OFFD	GP_BA+0x084	R/W	P2 Pin OFF Digital Enable	0x0000_0000
P3_OFFD	GP_BA+0x0C4	R/W	P3 Pin OFF Digital Enable	0x0000_0000
P4_OFFD	GP_BA+0x104	R/W	P4 Pin OFF Digital Enable	0x0000_0000
P5_OFFD	GP_BA+0x144	R/W	P5 Pin OFF Digital Enable	0x0000_0000

31	30	29	28	27	26	25	24
-							
23	**22**	**21**	**20**	**19**	**18**	**17**	**16**
OFFD							
15	**14**	**13**	**12**	**11**	**10**	**9**	**8**
-							
7	**6**	**5**	**4**	**3**	**2**	**1**	**0**
-							

Bits	Description	
[31:24]	**-**	**Reserved**
[23:16]	**OFFD[n]**	**OFFD: Px Pin[n] OFF Digital Input Path Enable** 1 = IO digital input path Disabled (digital input tied to low). 0 = IO digital input path Enabled. x = 0~5, n = 0~7
[15:0]	**-**	**Reserved**

Note:

P0_OFFD[19:18] are reserved.

P1_OFFD[23:22], [17] are reserved.

P2_OFFD[23], [17:16] are reserved.

P3_OFFD[23], [19] are reserved.

P4_OFFD[21:16] are reserved.

P5_OFFD[23:22] are reserved.

Port 0-5 Data Output Value (Px_DOUT)

Register	Offset	R/W	Description	Reset Value
P0_DOUT	GP_BA+0x008	R/W	P0 Data Output Value	0x0000_00F3
P1_DOUT	GP_BA+0x048	R/W	P1 Data Output Value	0x0000_003D
P2_DOUT	GP_BA+0x088	R/W	P2 Data Output Value	0x0000_007C
P3_DOUT	GP_BA+0x0C8	R/W	P3 Data Output Value	0x0000_0077
P4_DOUT	GP_BA+0x108	R/W	P4 Data Output Value	0x0000_00C0
P5_DOUT	GP_BA+0x148	R/W	P5 Data Output Value	0x0000_003F

31	30	29	28	27	26	25	24
-							
23	**22**	**21**	**20**	**19**	**18**	**17**	**16**
-							
15	**14**	**13**	**12**	**11**	**10**	**9**	**8**
-							
7	**6**	**5**	**4**	**3**	**2**	**1**	**0**
DOUT							

Bits	Description	
[31:8]	**-**	**Reserved**
[n]	**DOUT[n]**	**Px Pin[n] Output Value** Each of these bits controls the status of a Px pin when the Px pin is configured as output, open-drain and quasi-mode. 1 = Px pin[n] will drive High if the corresponding output mode enabling bit is set. 0 = Px pin[n] will drive Low if the corresponding output mode enabling bit is set. x = 0~5, n = 0~7
Note: P0_DOUT[3:2] are reserved. P1_DOUT [7:6], [1] are reserved. P2_DOUT [7], [1:0] are reserved. P3_DOUT [7], [3] are reserved. P4_DOUT [5:0] are reserved. P5_DOUT [7:6] are reserved.		

Port 0-5 Data Output Write Mask (Px_DMASK)

Register	Offset	R/W	Description	Reset Value
P0_DMASK	GP_BA+0x00C	R/W	P0 Data Output Write Mask	0x0000_0000
P1_DMASK	GP_BA+0x04C	R/W	P1 Data Output Write Mask	0x0000_0000
P2_DMASK	GP_BA+0x08C	R/W	P2 Data Output Write Mask	0x0000_0000
P3_DMASK	GP_BA+0x0CC	R/W	P3 Data Output Write Mask	0x0000_0000
P4_DMASK	GP_BA+0x10C	R/W	P4 Data Output Write Mask	0x0000_0000
P5_DMASK	GP_BA+0x14C	R/W	P5 Data Output Write Mask	0x0000_0000

31	30	29	28	27	26	25	24
-							
23	**22**	**21**	**20**	**19**	**18**	**17**	**16**
-							
15	**14**	**13**	**12**	**11**	**10**	**9**	**8**
-							
7	**6**	**5**	**4**	**3**	**2**	**1**	**0**
DMASK							

Bits	Description	
[31:8]	**-**	**Reserved**
[n]	**DMASK[n]**	**Px Data Output Write Mask** These bits are used to protect the corresponding register of Px_DOUT pin[n]. When the DMASK bit[n] is set to "1", the corresponding DOUTn pin is protected. The write signal is masked, and writing data to the protect pin is ignored. 0 = The corresponding Px_DOUT[n] bit can be updated. 1 = The corresponding Px_DOUT[n] bit is protected. x = 0~5, n = 0~7

Note:

P0_DMASK[3:2] are reserved.

P1_DMASK [7:6], [1] are reserved.

P2_DMASK [7], [1:0] are reserved.

P3_DMASK [7], [3] are reserved.

P4_DMASK [5:0] are reserved.

P5_DMASK [7:6] are reserved.

Port 0-5 Pin Value (Px_PIN)

Register	Offset	R/W	Description	Reset Value
P0_PIN	GP_BA+0x010	R	P0 Pin Value	0x0000_00XX
P1_PIN	GP_BA+0x050	R	P1 Pin Value	0x0000_00XX
P2_PIN	GP_BA+0x090	R	P2 Pin Value	0x0000_00XX
P3_PIN	GP_BA+0x0D0	R	P3 Pin Value	0x0000_00XX
P4_PIN	GP_BA+0x110	R	P4 Pin Value	0x0000_00XX
P5_PIN	GP_BA+0x150	R	P5 Pin Value	0x0000_00XX

31	30	29	28	27	26	25	24
-							
23	**22**	**21**	**20**	**19**	**18**	**17**	**16**
-							
15	**14**	**13**	**12**	**11**	**10**	**9**	**8**
-							
7	**6**	**5**	**4**	**3**	**2**	**1**	**0**
PIN							

Bits	Description	
[31:8]	**-**	**Reserved**
[n]	**PIN[n]**	**Px Pin[n] Value** The value read from each of these bit reflects the actual status of the respective Px pin[n]. (x = 0~5, n = 0~7)

Note:

P0_PIN[3:2] are reserved.

P1_PIN [7:6], [1] are reserved.

P2_PIN [7], [1:0] are reserved.

P3_PIN [7], [3] are reserved.

P4_PIN [5:0] are reserved.

P5_PIN [7:6] are reserved.

Port 0-5 De-bounce Enable (Px_DBEN)

Register	Offset	R/W	Description	Reset Value
P0_DBEN	GP_BA+0x014	R/W	P0 De-bounce Enable	0x0000_0000
P1_DBEN	GP_BA+0x054	R/W	P1 De-bounce Enable	0x0000_0000
P2_DBEN	GP_BA+0x094	R/W	P2 De-bounce Enable	0x0000_0000
P3_DBEN	GP_BA+0x0D4	R/W	P3 De-bounce Enable	0x0000_0000
P4_DBEN	GP_BA+0x114	R/W	P4 De-bounce Enable	0x0000_0000
P5_DBEN	GP_BA+0x154	R/W	P5 De-bounce Enable	0x0000_0000

31	30	29	28	27	26	25	24
-							
23	**22**	**21**	**20**	**19**	**18**	**17**	**16**
-							
15	**14**	**13**	**12**	**11**	**10**	**9**	**8**
-							
7	**6**	**5**	**4**	**3**	**2**	**1**	**0**
DBEN							

Bits	Description	
[31:8]	**-**	**Reserved**
[n]	**DBEN[n]**	**Px Input Signal De-bounce Enable** DBEN[n] is used to enable the de-bounce function for each corresponding bit. If the input signal pulse width can't be sampled by continuous two de-bounce sample cycle, the input signal transition is regarded as the signal bounce and will not trigger the interrupt. The DBEN[n] is used for "edge-trigger" interrupt only, and is ignored for "level trigger" interrupt. 0 = The pin[n] de-bounce function disabled. 1 = The pin[n] de-bounce function enabled. The de-bounce function is valid for edge triggered interrupt. If the interrupt mode is level triggered, the de-bounce enable bit is ignored. x = 0~5, n = 0~7

Bits	Description
Note: P0_DBEN[3:2] are reserved. P1_DBEN [7:6], [1] are reserved. P2_DBEN [7], [1:0] are reserved. P3_DBEN [7], [3] are reserved. P4_DBEN [5:0] are reserved. P5_DBEN [7:6] are reserved.	

Port 0-5 Interrupt Mode Control (Px_IMD)

Register	Offset	R/W	Description	Reset Value
P0_IMD	GP_BA+0x018	R/W	P0 Interrupt Mode Control	0x0000_0000
P1_IMD	GP_BA+0x058	R/W	P1 Interrupt Mode Control	0x0000_0000
P2_IMD	GP_BA+0x098	R/W	P2 Interrupt Mode Control	0x0000_0000
P3_IMD	GP_BA+0x0D8	R/W	P3 Interrupt Mode Control	0x0000_0000
P4_IMD	GP_BA+0x118	R/W	P4 Interrupt Mode Control	0x0000_0000
P5_IMD	GP_BA+0x158	R/W	P5 Interrupt Mode Control	0x0000_0000

31	30	29	28	27	26	25	24
-							
23	**22**	**21**	**20**	**19**	**18**	**17**	**16**
-							
15	**14**	**13**	**12**	**11**	**10**	**9**	**8**
-							
7	**6**	**5**	**4**	**3**	**2**	**1**	**0**
IMD							

Bits	Description	
[31:8]	**-**	**Reserved**
[n]	**IMD[n]**	**Port 0-5 Interrupt Mode Control** IMD[n] is used to control the interrupt by level trigger or edge trigger. If the interrupt is by edge trigger, the trigger source is control de-bounced. If the interrupt is by level trigger, the input source is sampled by one clock and then generates the interrupt. 0 = Edge trigger interrupt. 1 = Level trigger interrupt. If pin is set as the level trigger interrupt, then only one level can be set on the registers Px_IEN. If both the level is set to trigger interrupt, the setting is ignored and no interrupt will occur. The de-bounce function is valid for edge triggered interrupt. If the interrupt mode is level triggered, the de-bounce enable bit is ignored. x = 0~5, n = 0~7

Bits	Description
Note: P0_IMD[3:2] are reserved. P1_IMD [7:6], [1] are reserved. P2_IMD [7], [1:0] are reserved. P3_IMD [7], [3] are reserved. P4_IMD [5:0] are reserved. P5_IMD [7:6] are reserved.	

Port 0-5 Interrupt Enable (Px_IEN)

Register	Offset	R/W	Description	Reset Value
P0_IEN	GP_BA+0x01C	R/W	P0 Interrupt Enable	0x0000_0000
P1_IEN	GP_BA+0x05C	R/W	P1 Interrupt Enable	0x0000_0000
P2_IEN	GP_BA+0x09C	R/W	P2 Interrupt Enable	0x0000_0000
P3_IEN	GP_BA+0x0DC	R/W	P3 Interrupt Enable	0x0000_0000
P4_IEN	GP_BA+0x11C	R/W	P4 Interrupt Enable	0x0000_0000
P5_IEN	GP_BA+0x15C	R/W	P5 Interrupt Enable	0x0000_0000

31	30	29	28	27	26	25	24
-							
23	**22**	**21**	**20**	**19**	**18**	**17**	**16**
IR_EN							
15	**14**	**13**	**12**	**11**	**10**	**9**	**8**
-							
7	**6**	**5**	**4**	**3**	**2**	**1**	**0**
IF_EN							

Bits	Description	
[31:24]	**-**	**Reserved**
[n+16]	**IR_EN[n]**	**Port 0-5 Interrupt Enable by Input Rising Edge or Input Level High** IR_EN[n] is used to enable the interrupt for each of the corresponding input Px[n]. Setting bit to “1” also enables the pin wake-up function. When the IR_EN[n] bit is set to “1”: If the interrupt is level mode trigger, the input Px[n] state at level “high” will generate the interrupt. If the interrupt is edge mode trigger, the input Px[n] state changed from “low-to-high” will generate the interrupt. 1 = The Px[n] level-high or low-to-high interrupt Enabled. 0 = The Px[n] level-high or low-to-high interrupt Disabled. x = 0~5, n = 0~7
[15:8]	**-**	**Reserved**

Bits	Description	
[n]	**IF_EN[n]**	**Port 0-5 Interrupt Enable by Input Falling Edge or Input Level Low** IF_EN[n] used to enable the interrupt for each of the corresponding input Px[n]. Setting bit "1" also enables the pin wake-up function. When the IF_EB[n] bit is set to "1": If the interrupt is level mode trigger, the input Px[n] state at level "low" will generate the interrupt. If the interrupt is edge mode trigger, the input Px[n] state change from "high-to-low" will generate the interrupt. 1 = The Px[n] state low-level or high-to-low change interrupt Enabled. 0 = The Px[n] state low-level or high-to-low change interrupt Disabled. x = 0~5, n = 0~7
Note: P0_IEN[19:18], [3:2] are reserved. P1_IEN [23:22], [17], [7:6], [1] are reserved. P2_IEN [23], [17:16], [7], [1:0] are reserved. P3_IEN [23], [19], [7], [3] are reserved. P4_IEN [21:16], [5:0] are reserved. P5_IEN [23:22], [7:6] are reserved.		

Port 0-5 Interrupt Trigger Source Indicator (Px_ISRC)

Register	Offset	R/W	Description	Reset Value
P0_ISRC	GP_BA+0x020	R/W	P0 Interrupt Trigger Source Indicator	0x0000_0000
P1_ISRC	GP_BA+0x060	R/W	P1 Interrupt Trigger Source Indicator	0x0000_0000
P2_ISRC	GP_BA+0x0A0	R/W	P2 Interrupt Trigger Source Indicator	0x0000_0000
P3_ISRC	GP_BA+0x0E0	R/W	P3 Interrupt Trigger Source Indicator	0x0000_0000
P4_ISRC	GP_BA+0x120	R/W	P4 Interrupt Trigger Source Indicator	0x0000_0000
P5_ISRC	GP_BA+0x160	R/W	P5 Interrupt Trigger Source Indicator	0x0000_0000

31	30	29	28	27	26	25	24
-							
23	**22**	**21**	**20**	**19**	**18**	**17**	**16**
-							
15	**14**	**13**	**12**	**11**	**10**	**9**	**8**
-							
7	**6**	**5**	**4**	**3**	**2**	**1**	**0**
ISRC							

Bits	Description	
[31:8]	**-**	**Reserved**
[n]	**ISRC[n]**	**Port 0-5 Interrupt Trigger Source Indicator** Read: 1 = Indicates Px[n] generate an interrupt. 0 = No interrupt at Px[n]. Write: 1 = Clear the corresponding pending interrupt. 0 = No action. x = 0~5, n = 0~7

Bits	Description
Note: P0_ISRC [3:2] are reserved. P1_ISRC [7:6], [1] are reserved. P2_ISRC [7], [1:0] are reserved. P3_ISRC [7], [3] are reserved. P4_ISRC [5:0] are reserved. P5_ISRC [7:6] are reserved.	

Interrupt De-bounce Cycle Control (DBNCECON)

Register	Offset	R/W	Description	Reset Value
DBNCECON	GP_BA+0x180	R/W	External Interrupt De-bounce Control	0x0000_0020

31	30	29	28	27	26	25	24
-							
23	**22**	**21**	**20**	**19**	**18**	**17**	**16**
-							
15	**14**	**13**	**12**	**11**	**10**	**9**	**8**
-							
7	**6**	**5**	**4**	**3**	**2**	**1**	**0**
-		ICLK_ON	DBCLKSRC	DBCLKSEL			

Bits	Description	
[31:6]	**-**	**Reserved**
[5]	**ICLK_ON**	**Interrupt Clock On Mode** Setting this bit to "0" will disable the interrupt generate circuit clock if the pin[n] interrupt is disabled. 0 = The clock Disabled if the P0/1/2/3/4[n] interrupt is disabled. 1 = Interrupt generated circuit clock always Enabled. n = 0~7
[4]	**DBCLKSRC**	**De-bounce Counter Clock Source Selection** 1 = De-bounce counter clock source is the internal 10 KHz clock. 0 = De-bounce counter clock source is the HCLK.

Bits	Description	
[3:0]	**DBCLKSEL [3:0]**	**De-bounce Sampling Cycle Selection**

DBCLKSEL	Description
0	Sample interrupt input once per 1 clock
1	Sample interrupt input once per 2 clocks
2	Sample interrupt input once per 4 clocks
3	Sample interrupt input once per 8 clocks
4	Sample interrupt input once per 16 clocks
5	Sample interrupt input once per 32 clocks
6	Sample interrupt input once per 64 clocks
7	Sample interrupt input once per 128 clocks
8	Sample interrupt input once per 256 clocks
9	Sample interrupt input once per 2x256 clocks
10	Sample interrupt input once per 4x256 clocks
11	Sample interrupt input once per 8x256 clocks
12	Sample interrupt input once per 16x256 clocks
13	Sample interrupt input once per 32x256 clocks
14	Sample interrupt input once per 64x256 clocks
15	Sample interrupt input once per 128x256 clocks

GPIO Port [P0/P1/P2/P3/P4/P5] I/O Bit Output Control (P[x][n]_DOUT)

P[x][n]_DOUT: x = 0~5, n = 0~7

Register	Offset	R/W	Description	Reset Value
P0[n]_DOUT	GP_BA+0x200 - GP_BA+0x21C	R/W	P0 Pin I/O Bit Output/Input Control. For P0, n = 0, 1, 4, 5, 6, 7	0x0000_0001
P1[n]_DOUT	GP_BA+0x220 - GP_BA+0x23C	R/W	P1 Pin I/O Bit Output/Input Control. For P1, n = 0, 2, 3, 4, 5	0x0000_0001
P2[n]_DOUT	GP_BA+0x240 - GP_BA+0x25C	R/W	P2 Pin I/O Bit Output/Input Control. For P2, n = 2, 3, 4, 5, 6	0x0000_0001
P3[n]_DOUT	GP_BA+0x260 - GP_BA+0x27C	R/W	P3 Pin I/O Bit Output/Input Control. For P3, n = 0, 1, 2, 4, 5, 6	0x0000_0001
P4[n]_DOUT	GP_BA+0x280 - GP_BA+0x29C	R/W	P4 Pin I/O Bit Output/Input Control. For P4, n = 6, 7	0x0000_0001
P5[n]_DOUT	GP_BA+0x2A0 - GP_BA+0x2B4	R/W	P5 Pin I/O Bit Output/Input Control. For P5, n = 0, 1, 2, 3, 4, 5	0x0000_0001

31	30	29	28	27	26	25	24
-							
23	**22**	**21**	**20**	**19**	**18**	**17**	**16**
-							
15	**14**	**13**	**12**	**11**	**10**	**9**	**8**
-							
7	**6**	**5**	**4**	**3**	**2**	**1**	**0**
-							**Pxx_DOUT**

Bits	Description	
[31:1]	-	**Reserved**
[0]	**P[x][n]_DOUT**	**P[x][n] I/O Pin Bit Output/Input Control** Writing this bit can control one GPIO pin output value. 1 = The corresponding GPIO pin set to high. 0 = The corresponding GPIO pin set to low. Read this register to get IO pin status. 1 = Corresponding GPIO pin status is high. 0 = Corresponding GPIO pin status is low. For example: Writing P01_DOUT[0] will reflect the written value to pin P0.1, reading P01_DOUT[0] will return the value of pin P0.1. x = 0~5, n = 0~7

5.9 I²C Serial Interface Controller (Master/Slave)

5.9.1 Overview

I²C is a two-wire, bi-directional serial bus that provides a simple and efficient method of data exchange between devices. The I²C standard is a true multi-master bus including collision detection and arbitration that prevents data corruption if two or more masters attempt to control the bus simultaneously. Serial 8-bit oriented bi-directional data transfers can be made up 1.0 Mbps.

Data is transferred between a master and a slave synchronously to SCL on the SDA line on a byte-by-byte basis. Each data byte is 8 bits long. There is one SCL clock pulse for each data bit with the MSB being transmitted first. An acknowledge bit follows each transferred byte. Each bit is sampled during the high period of SCL; therefore, the SDA line may be changed only during the low period of SCL and must be held stable during the high period of SCL. A transition on the SDA line while SCL is high is interpreted as a command (START or STOP). Please refer to the following figure for more detailed I²C BUS Timing.

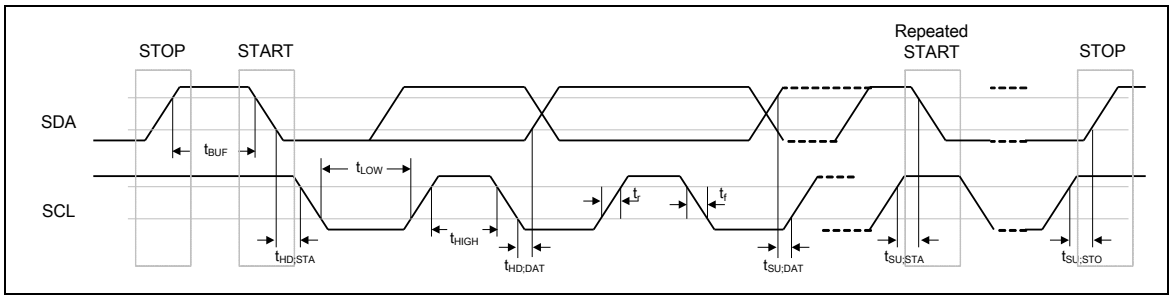

Figure 5.9-1 Bus Timing

The device's on-chip I²C logic provides the serial interface that meets the I²C bus standard mode specification. The I²C port handles byte transfers autonomously. To enable this port, the bit ENSI in I2CON should be set to "1". The I²C hardware interfaces to the I²C bus via two pins: SDA (P3.4, serial data line) and SCL (P3.5, serial clock line). Since the pull-up resistor is needed for Pin P3.4 and P3.5 for I²C operation as these are open-drain pins. When the I/O pins are used as I²C port, user must set the pins function to I²C in advance.

5.9.2 Features

The I²C bus uses two wires (SDA and SCL) to transfer information between devices connected to the bus. The main features of the bus are:

- Supports Master/Slave mode
- Bi-directional data transfer between masters and slaves
- Multi-master bus (no central master)
- Arbitration between simultaneously transmitting masters without corruption of serial data on the bus
- Serial clock synchronization allowing devices with different bit rates to communicate via one serial bus
- Serial clock synchronization can be used as a handshake mechanism to suspend and resume serial transfer
- Built-in 14-bit time-out counter that requests the I²C interrupt if the I²C bus hangs up

and timer-out counter overflows

- External pull-up needed for higher output pull-up speed
- Programmable clocks allowing for versatile rate control
- Supports 7-bit addressing mode
- Supports multiple address recognition (four slave address registers with mask option)

5.9.3 I²C Protocol

Normally, a standard communication consists of four parts:

1) START or Repeated START signal generation
2) Slave address and R/W bit transfer
3) Data transfer
4) STOP signal generation

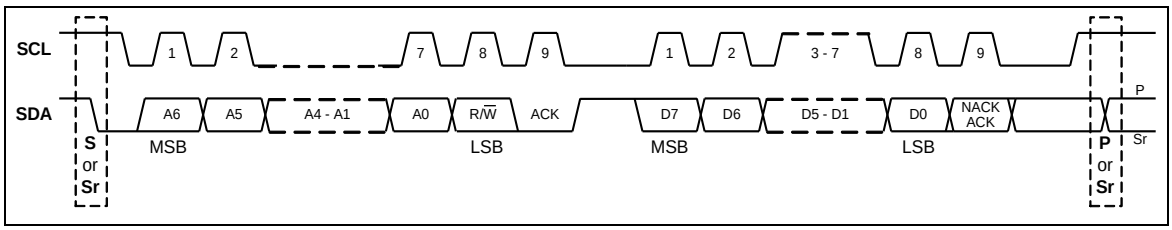

Figure 5.9-2 I²C Protocol

5.9.3.1 Data transfer on the I²C bus

A master-transmitter addresses a slave receiver with a 7-bit address.

The transfer direction is not changed.

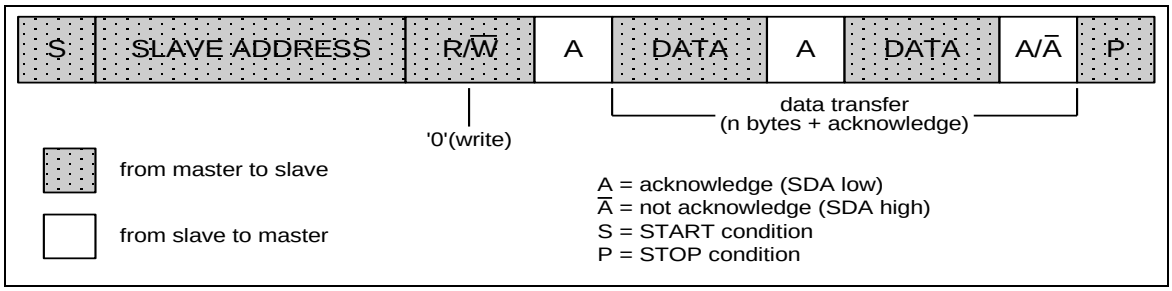

Figure 5.9-3 Master Transmits Data to Slave

A master reading a slave immediately changes the transfer direction after sending the first byte (address).

The transfer direction is changed.

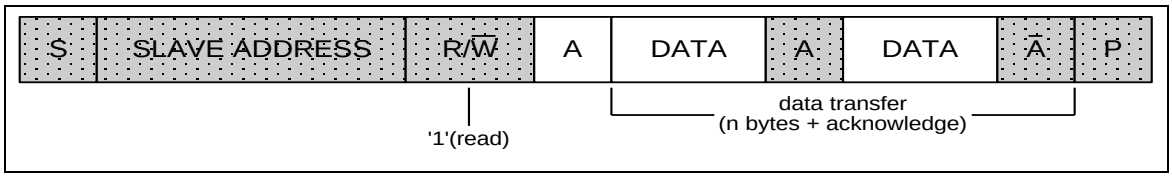

Figure 5.9-4 Master Reads Data from Slave

5.9.3.2 START or Repeated START signal

When the bus is free/idle, meaning no master device is engaging the bus (both SCL and SDA lines are high), a master can initiate a transfer by sending a START signal. A START signal, usually referred as the S-bit, is defined as a HIGH to LOW transition on the SDA line while SCL is HIGH. The START signal denotes the beginning of a new data transfer.

A Repeated START (Sr) is not STOP signal between two START signals. The master uses this method to communicate with another slave or the same slave in a different transfer direction (e.g. from writing to a device to reading from a device) without releasing the bus.

5.9.3.3 STOP signal

The master can terminate the communication by generating a STOP signal. A STOP signal, usually referred to as the P-bit, is defined as a LOW to HIGH transition on the SDA line while SCL is HIGH.

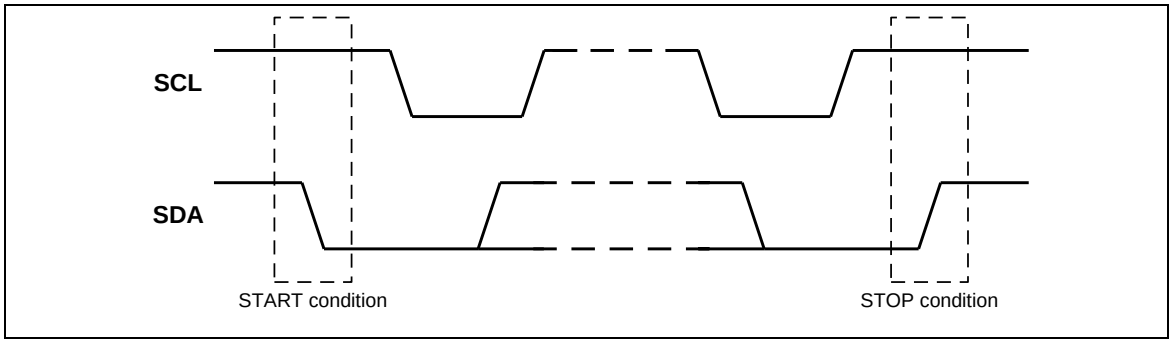

Figure 5.9-5 START and STOP Condition

5.9.3.4 Slave Address Transfer

The first byte of data transferred by the master immediately after the START signal is the slave address. This is a 7-bit calling address followed by a RW bit. The RW bit signals the slave the data transfer direction. No two slaves in the system can have the same address. Only the slave with an address that matches the one transmitted by the master will respond by returning an acknowledge bit by pulling the SDA low at the 9th SCL clock cycle.

5.9.3.5 Data Transfer

Once successful slave addressing has been achieved, the data transfer can proceed on a byte-by-byte basis in the direction specified by the RW bit sent by the master. Each transferred byte is followed by an acknowledge bit on the 9th SCL clock cycle. If the slave signals a Not Acknowledge (NACK), the master can generate a STOP signal to abort the data transfer or generate a Repeated START signal and start a new transfer cycle.

If the master, as the receiving device, does Not Acknowledge (NACK) the slave, the slave releases the SDA line for the master to generate a STOP or Repeated START signal.

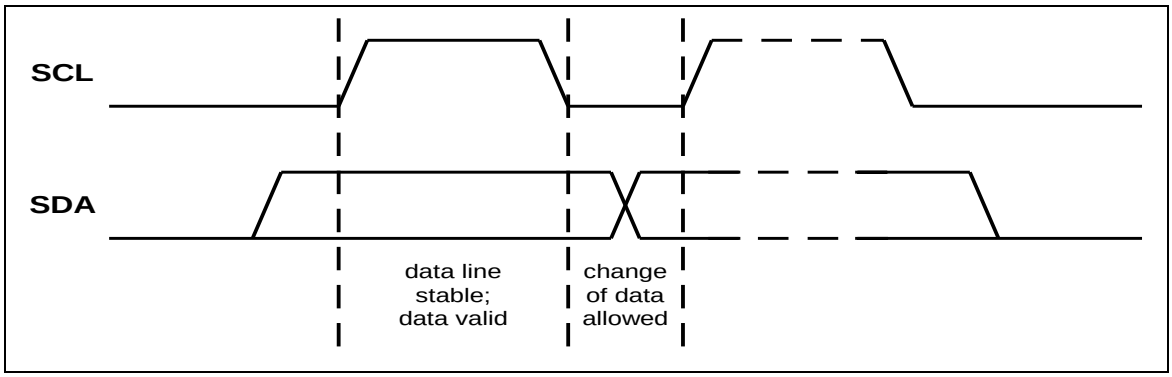

Figure 5.9-6 Bit Transfer on the I^2C Bus

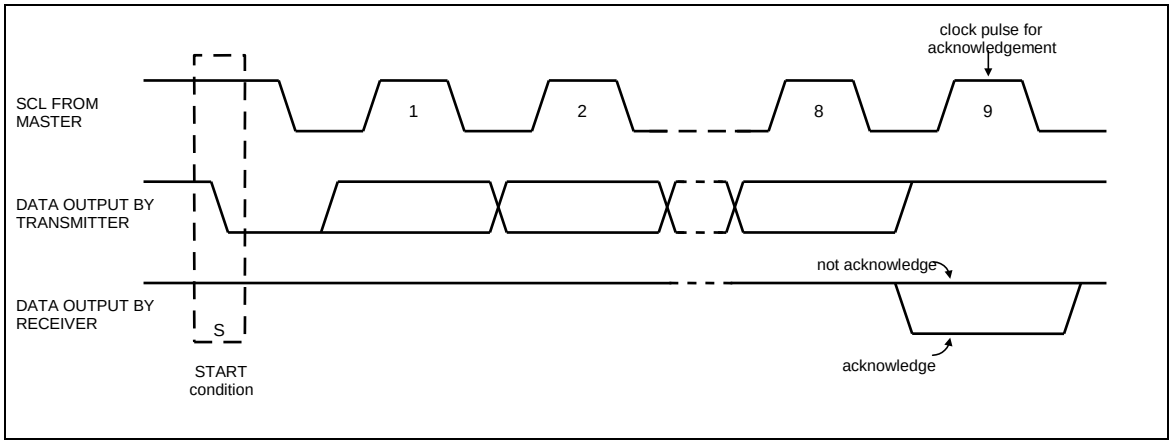

Figure 5.9-7 Acknowledge on the I^{2}C Bus

5.9.4 I^{2}C Protocol Registers

The CPU interfaces to the I^{2}C port through the following thirteen special function registers: I2CON (control register), I2CSTATUS (status register), I2CDAT (data register), I2CADDRn (address registers, n=0~3), I2CADMn (address mask registers, n=0~3), I2CLK (clock rate register) and I2CTOC (time-out counter register). All bit 31 ~ bit 8 of these I^{2}C special function registers are reserved. These bits do not have any functions and are all zero if read back.

When the I^{2}C port is enabled by setting ENSI (I2CON[6]) to high, the internal states will be controlled by I2CON and I^{2}C logic hardware. Once a new status code is generated and stored in I2CSTATUS, the I^{2}C Interrupt Flag bit SI (I2CON[3]) will be set automatically. If the Enable Interrupt bit EI (I2CON[7]) is set high at this time, the I^{2}C interrupt will be generated. The bit field I2CSTATUS[7:3] stores the internal state code, the lowest 3 bits of I2CSTATUS are always zero and the content keeps stable until SI is cleared by software. The base address of I^{2}C is 0x4002_0000.

5.9.4.1 Address Registers (I2CADDR)

The I^{2}C port is equipped with four slave address registers I2CADDRn (n=0~3). The contents of the register are irrelevant when I^{2}C is in Master mode. In Slave mode, the bit field I2CADDRn[7:1] must be loaded with the MCU's own slave address. The I^{2}C hardware will react if the contents of I2CADDR are matched with the received slave address.

The I^{2}C ports support the "General Call" function. If the GC bit (I2CADDRn[0]) is set, the I^{2}C port hardware will respond to General Call address (0x00). Clearing GC bit will disable the general call function.

When GC bit is set and the I^{2}C is in Slave mode, it can receive the general call address by 0x00 after the Master sends general call address to I^{2}C bus, and then it will follow status of GC mode.

The I^{2}C-bus controllers support multiple address recognition with four address mask registers I2CADMn (n=0~3). When the bit in the address mask register is set to one, it means the received corresponding address bit is don't-care. If the bit is set to zero, that means the received corresponding register bit should be exactly the same as address register.

5.9.4.2 Data Register (I2CDAT)

This register contains a byte of serial data to be transmitted or a byte which just has been received. The CPU can read from or write to this 8-bit (I2CDAT[7:0]) directly while it is not in the process of shifting a byte. When I^2C is in a defined state and the serial interrupt flag (SI) is set, data in I2CDAT[7:0] remains stable as long as SI bit is set. While data is being shifted out, data on the bus is simultaneously being shifted in; I2CDAT[7:0] always contains the last data byte present on the bus. Thus, in the event of arbitration lost, the transition from master transmitter to slave receiver is made with the correct data in I2CDAT[7:0].

I2CDAT[7:0] and the acknowledge bit form a 9-bit shift register, the acknowledge bit is controlled by the I^2C hardware and cannot be accessed by the CPU. Serial data is shifted through the acknowledge bit into I2CDAT[7:0] on the rising edges of serial clock pulses on the SCL line. When a byte has been shifted into I2CDAT[7:0], the serial data is available in I2CDAT[7:0], and the acknowledge bit (ACK or NACK) is returned by the control logic during the ninth clock pulse. Serial data is shifted out from I2CDAT[7:0] on the falling edges of SCL clock pulses, and is shifted into I2CDAT[7:0] on the rising edges of SCL clock pulses.

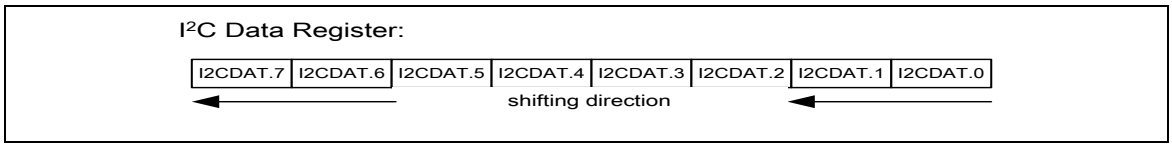

Figure 5.9-8 I^2C Data Shifting Direction

5.9.4.3 Control Register (I2CON)

The CPU can read from and write to this 8-bit field of I2CON[7:0] directly. Two bits are affected by hardware: the SI bit is set when the I^2C hardware requests a serial interrupt, and the STO bit is cleared when a STOP condition is present on the bus. The STO bit is also cleared when ENSI = "0".

EI — Enable Interrupt.

ENSI — Set to enable I^2C serial function block. When ENSI=1 the I^2C serial function enables. The multi-function pin function of SDA and SCL must be set to I^2C function first.

STA — I^2C START Control Bit. Setting STA to logic “1” to enter Master mode, the I^2C hardware sends a START or repeat START condition to bus when the bus is free.

STO — I^2C STOP Control Bit. In Master mode, setting STO to transmit a STOP condition to bus then I^2C hardware will check the bus condition if a STOP condition is detected this bit will be cleared by hardware automatically. In Slave mode, setting STO resets I^2C hardware to the defined “not addressed” Slave mode. This means it is NO LONGER in the slave receiver mode to receive data from the master transmit device.

SI — I^2C Interrupt Flag. When a new I^2C state is present in the I2CSTATUS register, the SI flag is set by hardware, and if bit EI (I2CON[7]) is set, the I^2C interrupt is requested. SI must be cleared by software. Clear SI is by writing “1” to this bit. All states are listed in section 5.9.12.

AA — Assert Acknowledge Control Bit. When AA=1 prior to address or data received, an acknowledged (low level to SDA) will be returned during the acknowledge clock pulse on the SCL line when 1.) A slave is acknowledging the address sent from master, 2.) The receiver devices are acknowledging the data sent by transmitter. When AA=0 prior to address or data received, a Not acknowledged (high level to SDA) will be returned during the acknowledge clock pulse on the SCL line.

5.9.4.4 Status Register (I2CSTATUS)

I2CSTATUS[7:0] is an 8-bit read-only register. The three least significant bits are always “0”. The bit field I2CSTATUS[7:3] contain the status code. There are 27 possible status code. All states are listed in section 5.9.12. When I2CSTATUS[7:0] contains 0xF8, no serial interrupt is requested. All other I2CSTATUS[7:3] values correspond to defined I^2C states. When each of these states is entered, a status interrupt is requested (SI = 1). A valid status code is present in I2CSTATUS[7:3] one cycle after SI is set by hardware and is still present one cycle after SI has been reset by software.

In addition, the state “0x00” stands for a Bus Error. A Bus Error occurs when a START or STOP condition is present at an illegal position in the format frame. Examples of illegal positions are during the serial transfer of an address byte, a data byte or an acknowledge bit. To recover I^2C from bus error, STO should be set and SI should be clear to enter not addressed slave mode. Then clear STO to release bus and to wait new communication. I^2C bus cannot recognize stop condition during this action when bus error occurs.

5.9.4.5 I^2C Clock Baud Rate Bits (I2CLK)

The data baud rate of I^2C is determined by I2CLK[7:0] register when I^2C is in Master mode. It is not important when I^2C is in Slave mode. In Slave mode, I^2C will automatically synchronize with any clock frequency up to 1 MHz from master I^2C device.

The data baud rate of I^2C setting is Data Baud Rate of I2C = PCLK / (4x (I2CLK[7:0] +1)). If PCLK=12 MHz, the I2CLK[7:0] = 9 (0x09), so data baud rate of I2C = 12 MHz / (4x (9 +1)) = 300K bits/sec. The block diagram is as the following figure.

5.9.4.6 The I^2C Time-out Counter Register (I2CTOC)

There is a 14-bit time-out counter which can be used to deal with the I^2C bus hang-up. If the time-out counter is enabled, the counter starts up counting until it overflows (TIF=1) and generates I^2C interrupt to CPU or stops counting by clearing ENTI to “0”. When time-out counter is enabled, setting flag SI to high will reset counter and re-start up counting after SI is cleared. If I^2C bus hangs up, it causes the I2CSTATUS and flag SI are not updated for a period, the 14-bit time-out counter may overflow and acknowledge CPU the I^2C interrupt. Refer to the following figure for the 14-bit time-out counter. User may clear TIF by writing “1” to this bit.

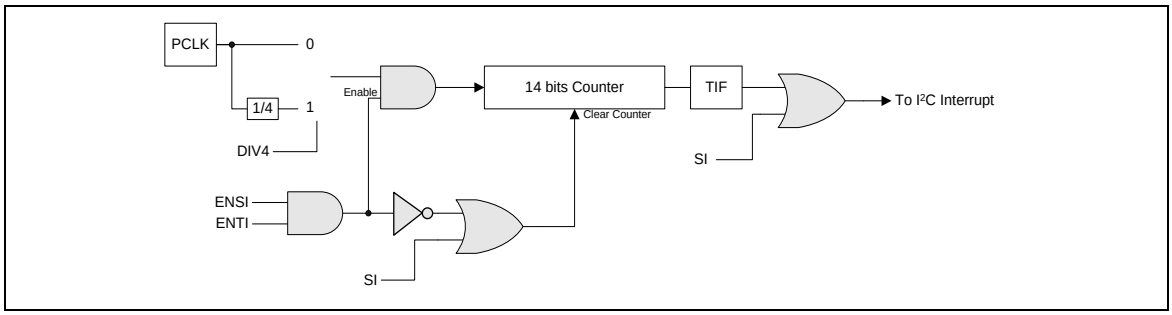

Figure 5.9-9 I^2C Time-out Count Block Diagram

5.9.5 Register Mapping

R: read only, **W:** write only, **R/W:** both read and write

Register	Offset	R/W	Description	Reset Value
I2C_BA = 0x4002_0000				
I2CON	I2C_BA+0x00	R/W	I^2C Control Register	0x0000_0000
I2CADRR0	I2C_BA+0x04	R/W	I^2C Slave Address Register 0	0x0000_0000
I2CDAT	I2C_BA+0x08	R/W	I^2C DATA Register	0x0000_0000
I2CSTATUS	I2C_BA+0x0C	R	I^2C Status Register	0x0000_00F8
I2CLK	I2C_BA+0x10	R/W	I^2C Clock Divided Register	0x0000_0000
I2CTOC	I2C_BA+0x14	R/W	I^2C Time-Out Counter Register	0x0000_0000
I2CADDR1	I2C_BA+0x18	R/W	I^2C Slave Address Register 1	0x0000_0000
I2CADDR2	I2C_BA+0x1C	R/W	I^2C Slave Address Register 2	0x0000_0000
I2CADDR3	I2C_BA+0x20	R/W	I^2C Slave Address Register 3	0x0000_0000
I2CADM0	I2C_BA+0x24	R/W	I^2C Slave Address Mask Register 0	0x0000_0000
I2CADM1	I2C_BA+0x28	R/W	I^2C Slave Address Mask Register 1	0x0000_0000
I2CADM2	I2C_BA+0x2C	R/W	I^2C Slave Address Mask Register 2	0x0000_0000
I2CADM3	I2C_BA+0x30	R/W	I^2C Slave Address Mask Register 3	0x0000_0000

5.9.6 Register Description

I²C CONTROL REGISTER (I2CON)

Register	Offset	R/W	Description	Reset Value
I2CON	I2C_BA+0x00	R/W	I²C Control Register	0x0000_0000

31	30	29	28	27	26	25	24
-							
23	**22**	**21**	**20**	**19**	**18**	**17**	**16**
-							
15	**14**	**13**	**12**	**11**	**10**	**9**	**8**
-							
7	**6**	**5**	**4**	**3**	**2**	**1**	**0**
EI	**ENSI**	**STA**	**STO**	**SI**	**AA**	-	

Bits	Description	
[31:8]	**-**	**Reserved**
[7]	**EI**	**Enable Interrupt** 1 = I²C interrupt Enabled. 0 = I²C interrupt Disabled.
[6]	**ENSI**	**I²C Controller Enable Bit** 1 = Enabled. 0 = Disabled. Set to enable the I²C serial function block. When ENSI=1 the I²C serial function is enabled. The multi-function pin function of SDA and SCL must be set to I²C function first.
[5]	**STA**	**I²C START Control Bit** Setting STA to logic "1" will enter Master mode. I²C hardware sends a START or repeats the START condition to bus when the bus is free.
[4]	**STO**	**I²C STOP Control Bit** In Master mode, setting STO to transmit a STOP condition to bus then I²C hardware will check the bus condition if a STOP condition is detected this bit will be cleared by hardware automatically. In Slave mode, setting STO resets I²C hardware to the defined "not addressed" Slave mode. This means it is NO LONGER in the Slave receiver mode to receive data from the master transmit device.
[3]	**SI**	**I²C Interrupt Flag** When a new I²C state is present in the I2CSTATUS register, the SI flag is set by hardware, and if bit EI (I2CON[7]) is set, the I²C interrupt is requested. SI must be cleared by software. Clear SI is by writing "1" to this bit.

Bits	Description	
[2]	**AA**	**Assert Acknowledge Control Bit** When AA=1 is prior to address or data received, an acknowledged (low level to SDA) will be returned during the acknowledge clock pulse on the SCL line when 1.) A slave is acknowledging the address sent from master, 2.) The receiver devices are acknowledging the data sent by transmitter. When AA=0 prior to address or data received, a Not acknowledged (high level to SDA) will be returned during the acknowledge clock pulse on the SCL line.
[1:0]	**-**	**Reserved**

I²C DATA REGISTER (I2CDAT)

Register	Offset	R/W	Description	Reset Value
I2CDAT	I2C_BA+0x08	R/W	I²C DATA Register	0x0000_0000

31	30	29	28	27	26	25	24
-							
23	**22**	**21**	**20**	**19**	**18**	**17**	**16**
-							
15	**14**	**13**	**12**	**11**	**10**	**9**	**8**
-							
7	**6**	**5**	**4**	**3**	**2**	**1**	**0**
I2CDAT							

Bits	Description	
[31:8]	**-**	**Reserved**
[7:0]	**I2CDAT[7:0]**	**I²C Data Register** Bit [7:0] is located with the 8-bit transferred data of the I²C serial port.

I²C STATUS REGISTER (I2CSTATUS)

Register	Offset	R/W	Description	Reset Value
I2CSTATUS	I2C_BA+0x0C	R	I²C STATUS Register	0x0000_00F8

31	30	29	28	27	26	25	24
-							
23	**22**	**21**	**20**	**19**	**18**	**17**	**16**
-							
15	**14**	**13**	**12**	**11**	**10**	**9**	**8**
-							
7	**6**	**5**	**4**	**3**	**2**	**1**	**0**
I2CSTATUS							

Bits	Description	
[31:8]	**-**	**Reserved**
[7:0]	**I2CSTATUS[7:0]**	**I²C Status Register** The status register of I²C controller: The three least significant bits are always “0”. The five most significant bits contain the status code. There are 27 possible status code. When I2CSTATUS contains 0xF8, no serial interrupt is requested. All the other I2CSTATUS values correspond to the defined I²C states. When each of these states is entered, a status interrupt is requested (SI = 1). A valid status code is present in I2CSTATUS one cycle after SI is set by hardware and is still present one cycle after SI has been reset by software. In addition, the state 00H stands for a Bus Error. A Bus Error occurs when a START or STOP condition is present at an illegal position in the formation frame. Examples of illegal position are during the serial transfer of an address byte, a data byte or an acknowledge bit.

STATUS	Description	STATUS	Description
0x08	Start	0xA0	Slave Transmit Repeat Start or Stop
0x10	Master Repeat Start	0xA8	Slave Transmit Address ACK
0x18	Master Transmit Address ACK	0xB0	Slave Transmit Arbitration Lost
0x20	Master Transmit Address NACK	0xB8	Slave Transmit Data ACK
0x28	Master Transmit Data ACK	0xC0	Slave Transmit Data NACK
0x30	Master Transmit Data NACK	0xC8	Slave Transmit Last Data ACK
0xF8	Stop	0x60	Slave Receive Address ACK
0x38	Master Arbitration Lost	0x68	Slave Receive Arbitration Lost
0x40	Master Receive ACK	0x80	Slave Receive Data ACK
0x48	Master Receive NACK	0x88	Slave Receive Data NACK
0x50	Master Receive ACK	0x70	GC mode Address ACK
0x58	Master Receive NACK	0x78	GC mode Arbitration Lost
0x00	Bus Error	0x90	GC mode Data ACK
		0x98	GC mode Data NACK

The detail information about the status is described in section 5.9.12.

I²C BAUD RATE CONTROL REGISTER (I2CLK)

Register	Offset	R/W	Description	Reset Value
I2CLK	I2C_BA+0x10	R/W	I²C Clock Divided Register	0x0000_0000

31	30	29	28	27	26	25	24
-							
23	**22**	**21**	**20**	**19**	**18**	**17**	**16**
-							
15	**14**	**13**	**12**	**11**	**10**	**9**	**8**
-							
7	**6**	**5**	**4**	**3**	**2**	**1**	**0**
I2CLK							

Bits	Description	
[31:8]	**-**	**Reserved**
[7:0]	**I2CLK[7:0]**	**I²C clock divided Register** The I²C clock rate bits: Data Baud Rate of I2C = PCLK / (4x (I2CLK+1)).

I²C TIME-OUT COUNTER REGISTER (I2CTOC)

Register	Offset	R/W	Description	Reset Value
I2CTOC	I2C_BA+0x14	R/W	I²C Time-out Counter Register	0x0000_0000

31	30	29	28	27	26	25	24
-							
23	**22**	**21**	**20**	**19**	**18**	**17**	**16**
-							
15	**14**	**13**	**12**	**11**	**10**	**9**	**8**
-							
7	**6**	**5**	**4**	**3**	**2**	**1**	**0**
-					**ENTI**	**DIV4**	**TIF**

Bits	Description	
[31:3]	**-**	**Reserved**
[2]	**ENTI**	**Time-out CounterEenable** 1 = Enabled. 0 = Disabled. When enabled, the 14-bit time-out counter will start counting when SI is clear. Setting flag SI to high will reset counter and re-start up counting after SI is cleared.
[1]	**DIV4**	**Time-out Counter Input Clock Divided by 4** 1 = Enabled. 0 = Disabled. When enabled, the time-out period is prolong 4 times.
[0]	**TIF**	**Time-out Flag** 1 = Time-out flag is set by hardware. It can interrupt CPU. 0 = Software can clear the flag by writing “1” to this flag when TIF is set.

I²C SLAVE ADDRESS REGISTER (I2CADDRx)

Register	Offset	R/W	Description	Reset Value
I2CADDR0	I2C_BA+0x04	R/W	I²C Slave Address Register 0	0x0000_0000
I2CADDR1	I2C_BA+0x18	R/W	I²C Slave Address Register 1	0x0000_0000
I2CADDR2	I2C_BA+0x1C	R/W	I²C Slave Address Register 2	0x0000_0000
I2CADDR3	I2C_BA+0x20	R/W	I²C Slave Address Register 3	0x0000_0000

31	30	29	28	27	26	25	24
-							
23	**22**	**21**	**20**	**19**	**18**	**17**	**16**
-							
15	**14**	**13**	**12**	**11**	**10**	**9**	**8**
-							
7	**6**	**5**	**4**	**3**	**2**	**1**	**0**
I2CADDR							**GC**

Bits	Description	
[31:8]	**-**	**Reserved**
[7:1]	**I2CADDR[6:0]**	**I²C Address Register** The content of this register is irrelevant when I²C is in Master mode. In Slave mode, the seven most significant bits must be loaded with the MCU's own address. The I²C hardware will react if either of the address is matched.
[0]	**GC**	**General Call Function** 0 = General Call Function Disabled. 1 = General Call Function Enabled.

I²C SLAVE ADDRESS REGISTER (I2CADDRx)

Register	Offset	R/W	Description	Reset Value
I2CADM0	I2C_BA+0x24	R/W	I²C Slave Address Mask Register 0	0x0000_0000
I2CADM1	I2C_BA+0x28	R/W	I²C Slave Address Mask Register 1	0x0000_0000
I2CADM2	I2C_BA+0x2C	R/W	I²C Slave Address Mask Register 2	0x0000_0000
I2CADM3	I2C_BA+0x30	R/W	I²C Slave Address Mask Register 3	0x0000_0000

31	30	29	28	27	26	25	24
-							
23	**22**	**21**	**20**	**19**	**18**	**17**	**16**
-							
15	**14**	**13**	**12**	**11**	**10**	**9**	**8**
-							
7	**6**	**5**	**4**	**3**	**2**	**1**	**0**
I2CADMx							-

Bits	Description	
[31:8]	-	**Reserved**
[7:1]	**I2CADMx[6:0]**	**I²C Address Mask Register** 1 = Mask Enabled (the received corresponding address bit is don't care). 0 = Mask Disabled (the received corresponding register bit should be exactly the same as address register). I²C bus controller supports multiple address recognition with four address mask registers. When the bit in the address mask register is set to "1", the received corresponding address bit is don't-care. If the bit is set to "0", the received corresponding register bit should be exactly the same as address register.
[0]	-	**Reserved**

5.9.7 Operation Modes

The on-chip I^2C port supports five operation modes: Master transmitter, Master receiver, Slave transmitter, Slave receiver, and GC call.

In a given application, I^2C port may operate as a master or as a slave. In Slave mode, the I^2C port hardware looks for its own slave address and the general call address. If one of these addresses is detected, and if the slave is willing to receive or transmit data from/to master (by setting the AA bit), acknowledge pulse will be transmitted out on the 9th clock, hence an interrupt is requested on both master and slave devices if interrupt is enabled. When the microcontroller wishes to become the bus master, the hardware waits until the bus is free before the Master mode is entered so that a possible slave action is not interrupted. If bus arbitration is lost in Master mode, I^2C port switches to Slave mode immediately and can detect its own slave address in the same serial transfer.

5.9.8 Master Transmitter Mode

Serial data is output through SDA while SCL outputs the serial clock. The first byte transmitted contains the slave address of the receiving device (7 bits) and the data direction bit. In this case the data direction bit (R/W) will be logic “0”, and it is represented by “W” in the flow diagrams. Thus the first byte transmitted is SLA+W. Serial data transmits 8 bits at a time. After each byte is transmitted, an acknowledge bit is received. The START and STOP conditions are output to indicate the beginning and end of a serial transfer.

5.9.9 Master Receiver Mode

In this case the data direction bit (R/W) will be logic “1”, and it is represented by “R” in the flow diagrams. Thus the first byte transmitted is SLA+R. Serial data is received via SDA while SCL outputs the serial clock. Serial data receives 8 bits at a time. After each byte is received, an acknowledge bit is transmitted. The START and STOP conditions are output to indicate the beginning and end of a serial transfer.

5.9.10 Slave Receiver Mode

Serial data and serial clock are received through SDA and SCL. After each byte is received, an acknowledge bit is transmitted. START and STOP conditions are recognized as the beginning and end of a serial transfer. Address recognition is performed by hardware after reception of the slave address and direction bit.

5.9.11 Slave Transmitter Mode

The first byte is received and handled as in the slave receiver mode. However, in this mode, the direction bit will indicate that the transfer direction is reversed. Serial data is transmitted via SDA while the serial clock is input through SCL. START and STOP conditions are recognized as the beginning and end of a serial transfer.

5.9.12 Data Transfer Flow in Five Operation Modes

The five operation modes are: Master transmitter, Master receiver, Slave transmitter, Slave receiver, and GC Call. Bits STA, STO and AA in I2CON register will determine the next state of the I^2C hardware after SI flag is cleared. Upon completion of the new action, a new status code will be updated and the SI flag will be set. If the I^2C interrupt control bit EI (I2CON[7]) is set, appropriate action or software branch of the new status code can be performed in the Interrupt service routine.

Data transfers in each mode are shown in the following figures.

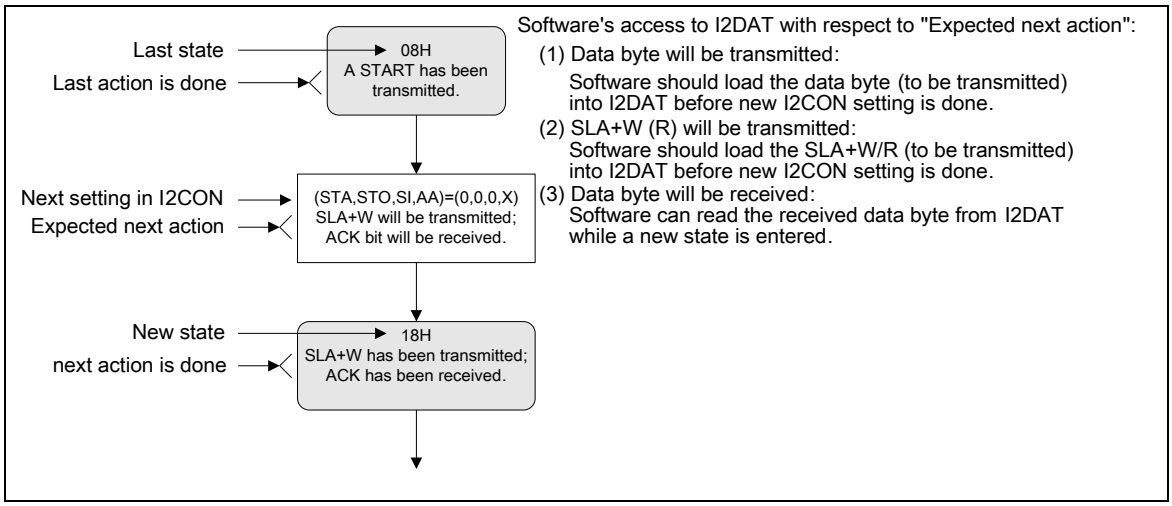

Figure 5.9-10 Legend for the Following Five Figures

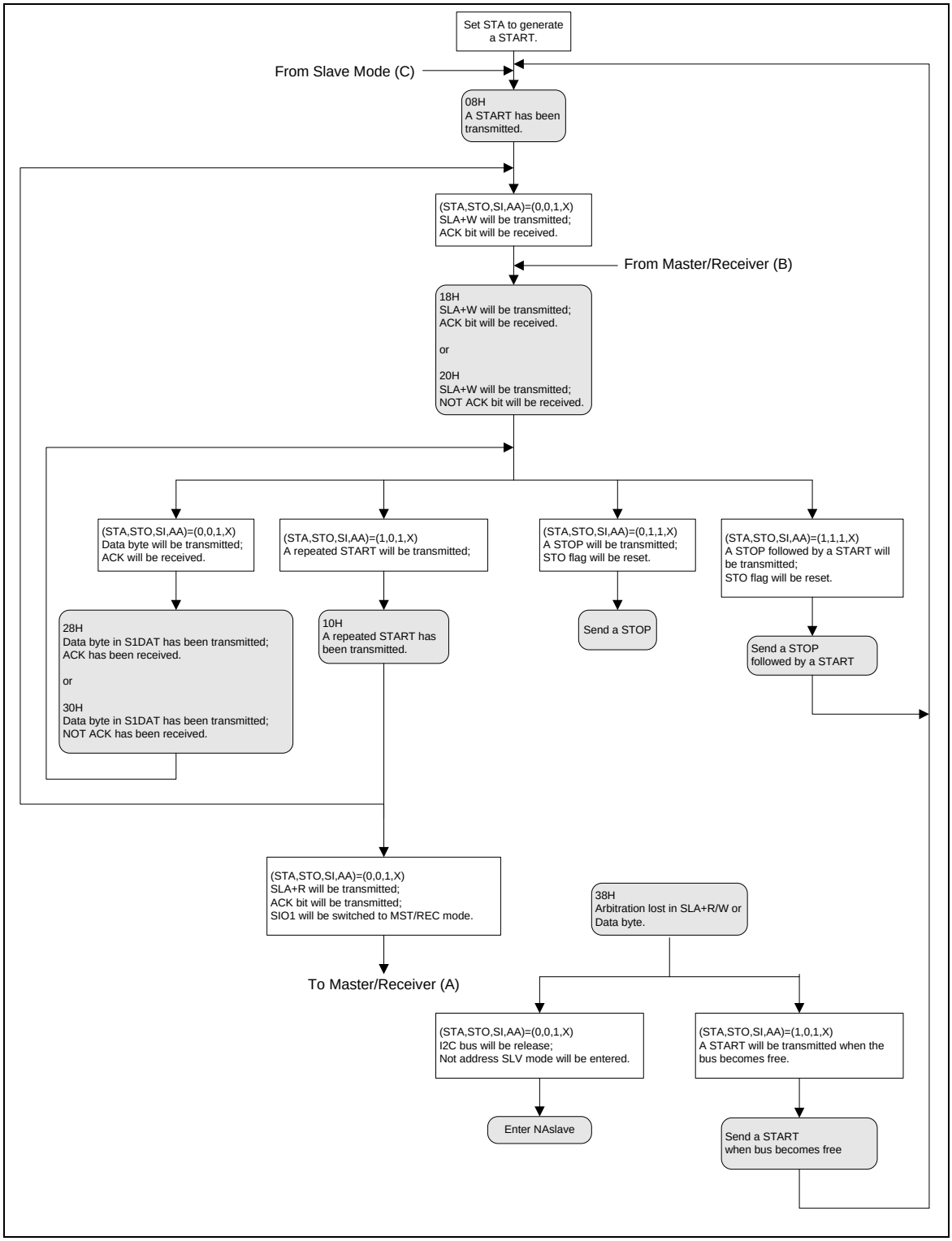

Figure 5.9-11 Master Transmitter Mode

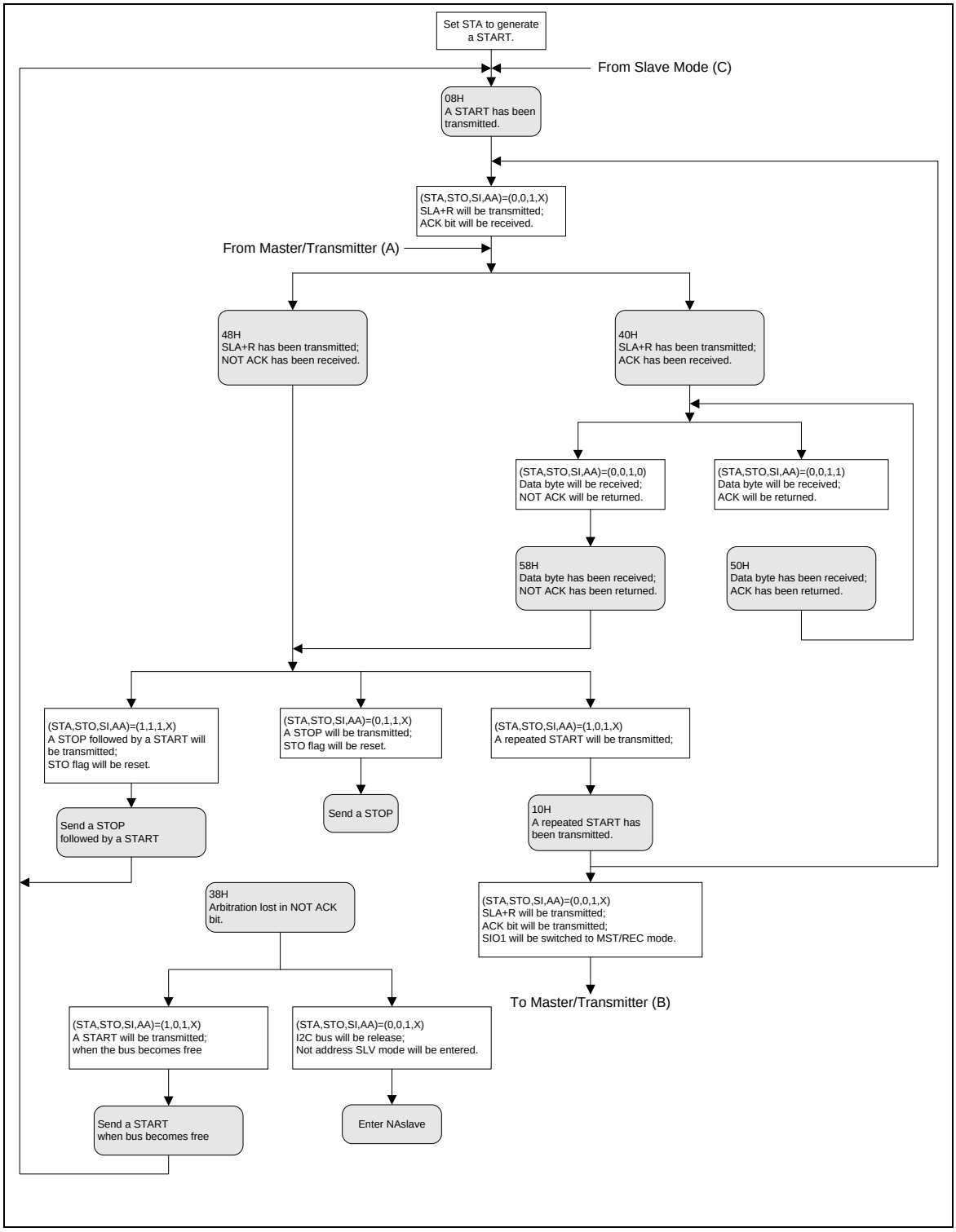

Figure 5.9-12 Master Receiver Mode

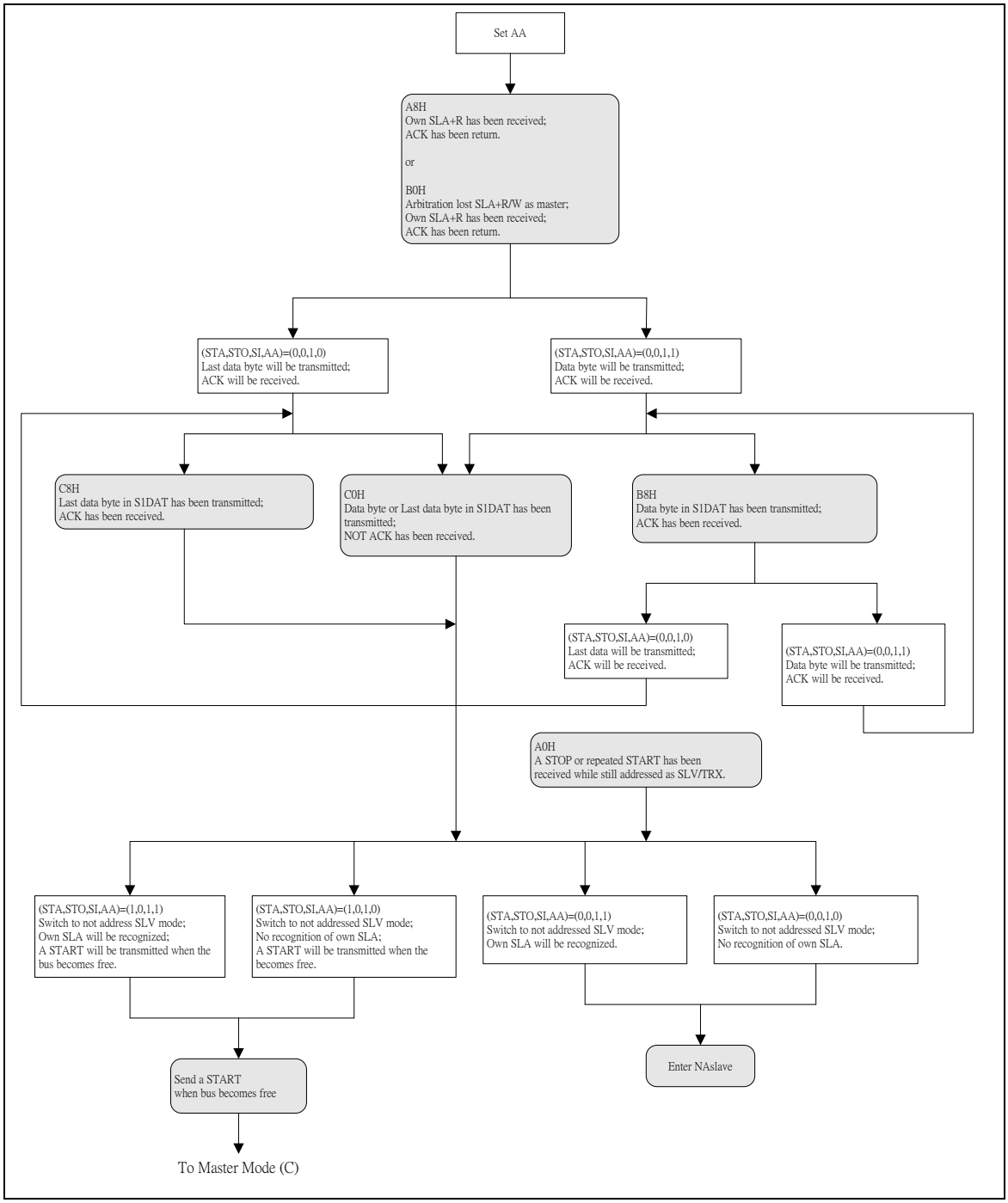

Figure 5.9-13 Slave Transmitter Mode

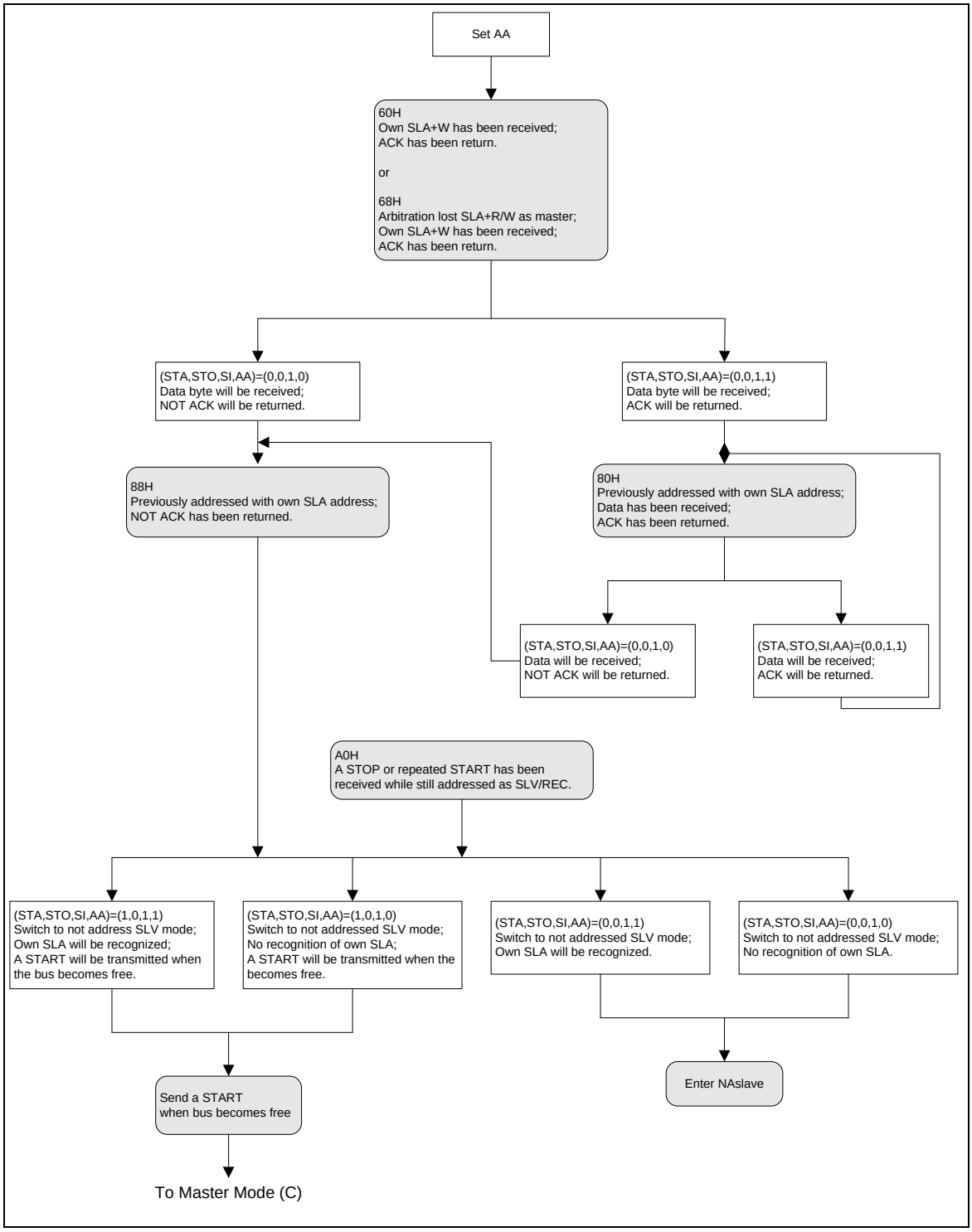

Figure 5.9-14 Slave Receiver Mode

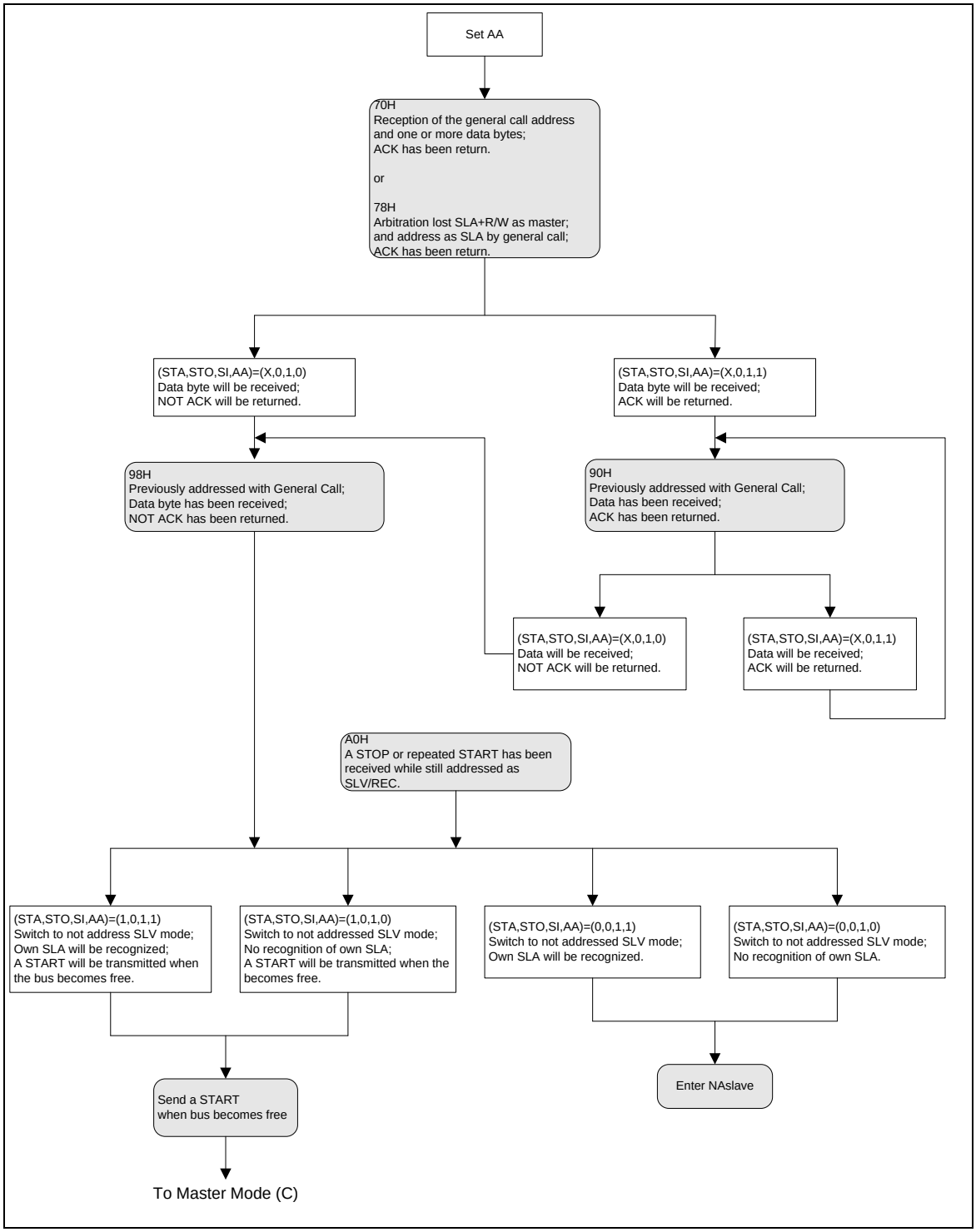

Figure 5.9-15 GC Mode

5.10 Enhanced PWM Generator

5.10.1 Overview

The NuMicro Mini51™ series has built one PWM unit which is specially designed for motor driving control applications. The PWM unit supports 6 PWM generators which can be configured as 6 independent PWM outputs, PWM0~PWM5, or as 3 complementary PWM pairs, (PWM0, PWM1), (PWM2, PWM3) and (PWM4, PWM5) with 3 programmable dead-zone generators.

Each PWM generator shares the 8-bit prescaler, clock divider providing 5 divided frequencies (1, 1/2, 1/4, 1/8, 1/16). Each PWM output has independent 16-bit counter for PWM period control, and 16-bit comparators for PWM duty control. The 6 PWM generators provide six independent PWM interrupt flags which are set by hardware when the corresponding PWM period counter comparison matched. Each PWM interrupt source with its corresponding enable bit can request PWM interrupt. The PWM generators can be configured as One-shot mode to produce only one PWM cycle signal or Auto-reload mode to output PWM waveform continuously.

5.10.2 Features

The PWM unit supports the following features:

- Six independent 16-bit PWM duty control units with maximum 6 port pins:
  - 6 independent PWM outputs – PWM0, PWM1, PWM2, PWM3, PWM4, and PWM5
  - 3 complementary PWM pairs, with each pin in a pair mutually complement to each other and capable of programmable dead-zone insertion – (PWM0, PWM1), (PWM2, PWM3) and (PWM4, PWM5)
  - 3 synchronous PWM pairs, with each pin in a pair in-phase – (PWM0, PWM1), (PWM2, PWM3) and (PWM4, PWM5)
- Group control bit – PWM2 and PWM4 are synchronized with PWM0
- One-shot (only support edge alignment mode) or Auto-reload mode PWM
- Up to 16-bit resolution
- Supports Edge-aligned and Center-aligned mode
- Programmable dead-zone insertion between complementary paired PWMs
- Each pin of PWM0 to PWM5 has independent polarity setting control
- Hardware fault brake protections
  - Two Interrupt source types:
    - Synchronously requested at PWM frequency when down counter comparison matched (edge- and center-aligned mode) or underflow (edge-aligned mode)
    - Requested when external fault brake asserted
      - BKP0: EINT0
      - BKP1: EINT1 or CPO0
- The PWM signals before polarity control stage are defined in view of positive logic. Whether the PWM ports are active high or active low is controlled by the polarity control register.

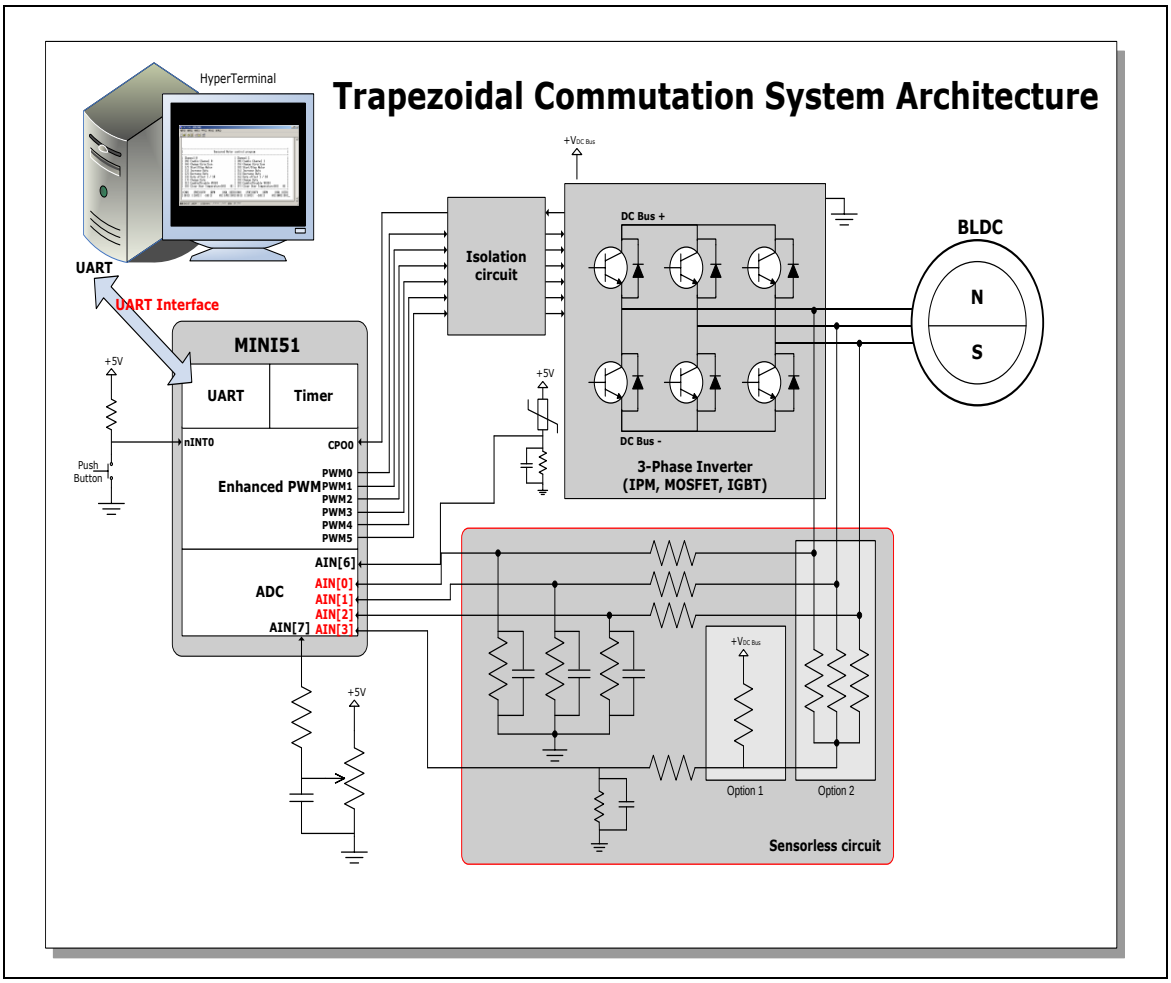

Figure 5.10-1 Application Circuit Diagram

5.10.3 PWM Block Diagram

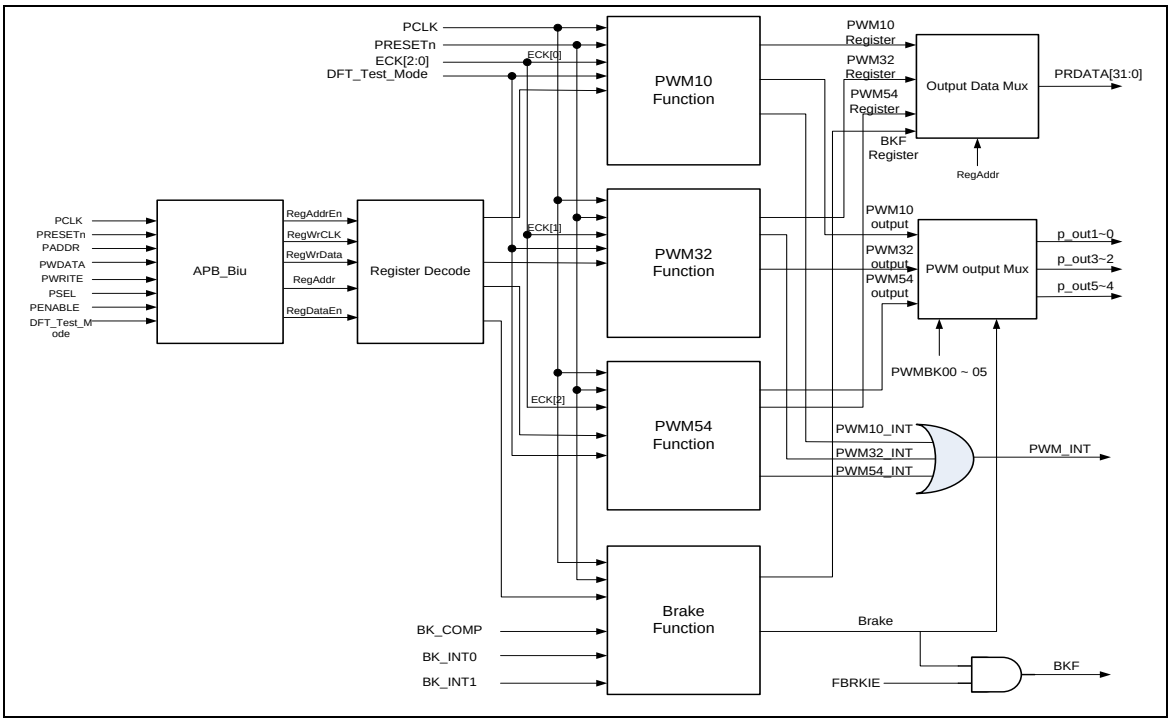

Figure 5.10-2 PWM Block Diagram

Following figures illustrate the architecture of PWM in pair (PWM 0&1 are in one pair and PWM 2&3 are in another one, and so on).

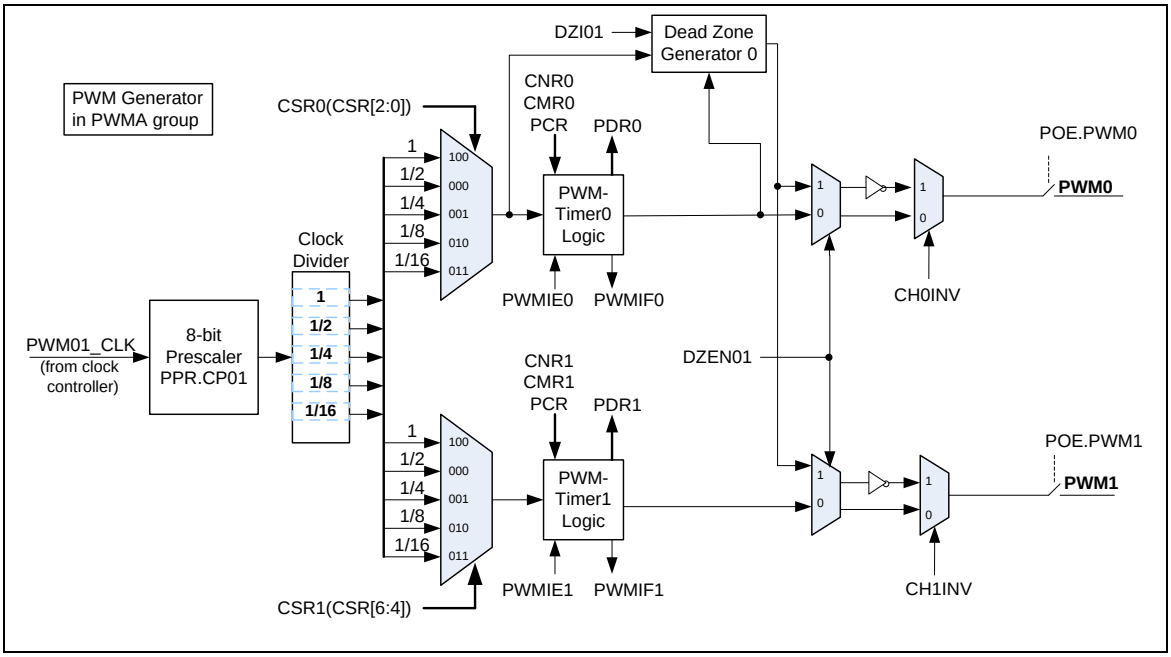

Figure 5.10-3 PWM Generator 0 Architecture Diagram

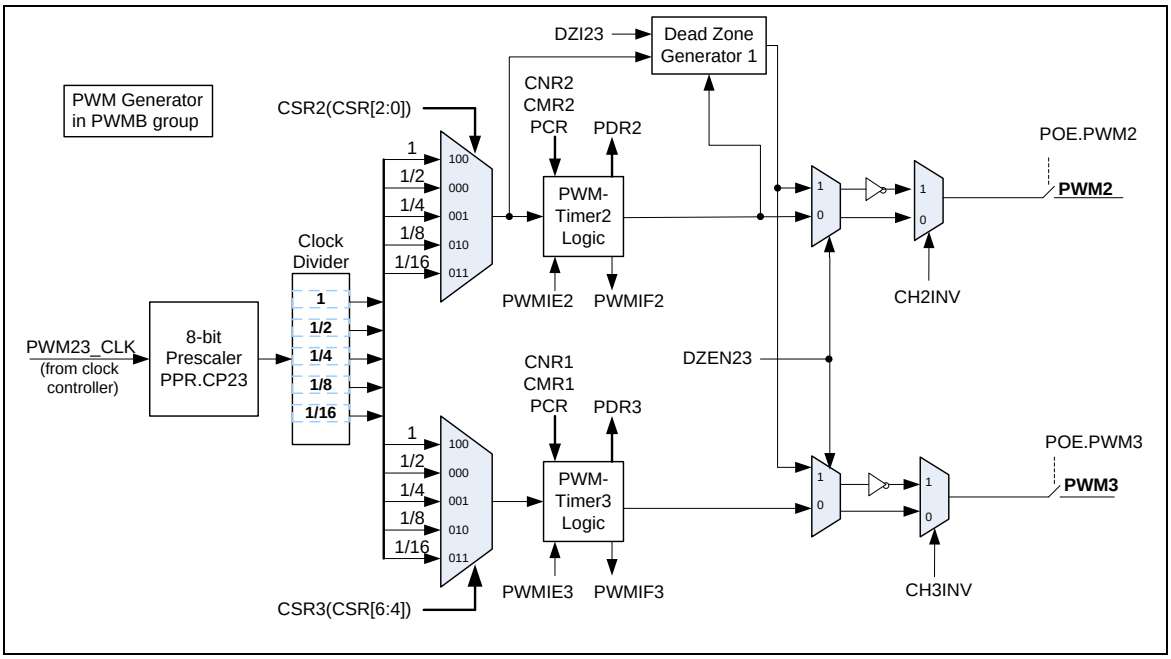

Figure 5.10-4 PWM Generator 2 Architecture Diagram

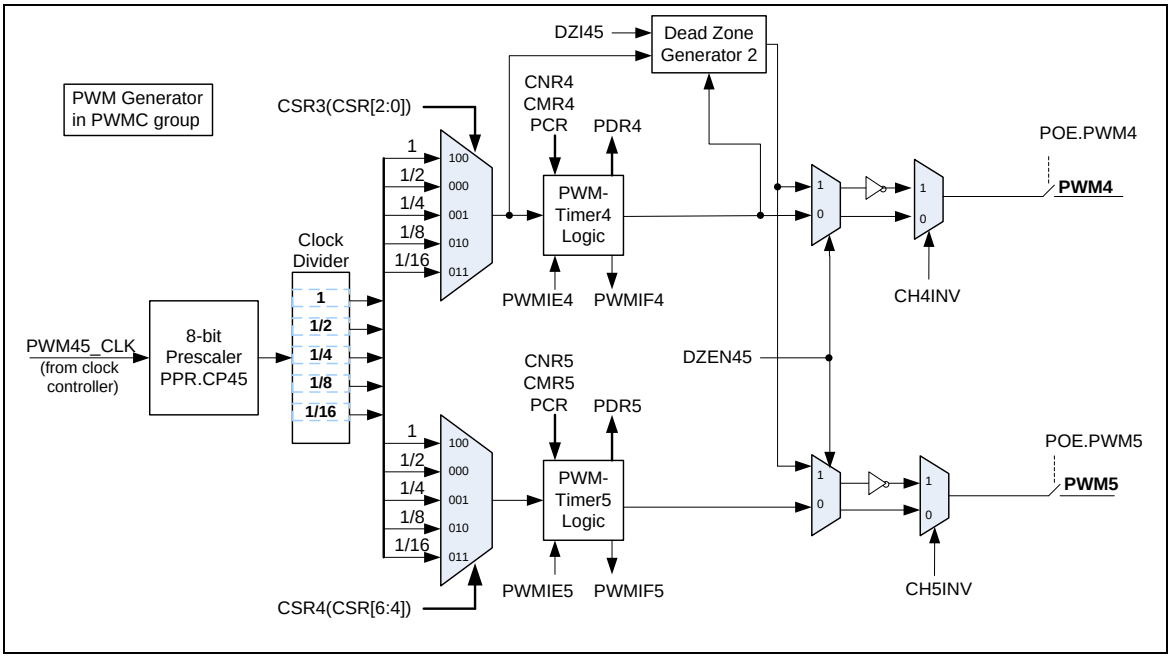

Figure 5.10-5 PWM Generator 4 Architecture Diagram

5.10.4 PWM Function

5.10.4.1 PWM-Timer Operation

This device supports two operation modes: Edge-aligned and Center-aligned mode.

Following equations show the formula for period and duty for each PWM operation mode:

Edge aligned (Down counter)

Duty ratio = (CMR+1) / (CNR+1)

Duty = (CMR+1) x (clock period)

Period = (CNR+1) x (clock period)

Center aligned (Up and Down Counter):

Duty ratio = (CNR - CMR) / (CNR+1)

Duty = (CNR - CMR) x 2 x (clock period)

Period = (CNR+1) x 2 x (clock period)

Edge aligned PWM (Down-counter)

In Edge-aligned PWM Output mode, the 16-bit PWM counter will start counting-down from CNRn to match with the value of the duty cycle CMRn (old); when this happens it will toggle the PWMn generator output to high. The counter will continue counting-down to zero; at this moment, it toggles the PWMn generator output to low and CMRn (new) and CNRn (new) are updated with CHnMODE=1, and requests the PWM interrupt if PWM interrupt is enabled (PIER.n=1).

Figure 5.10-6 and Figure 5.10-7 describe the Edge-aligned PWM timing and operation flow.

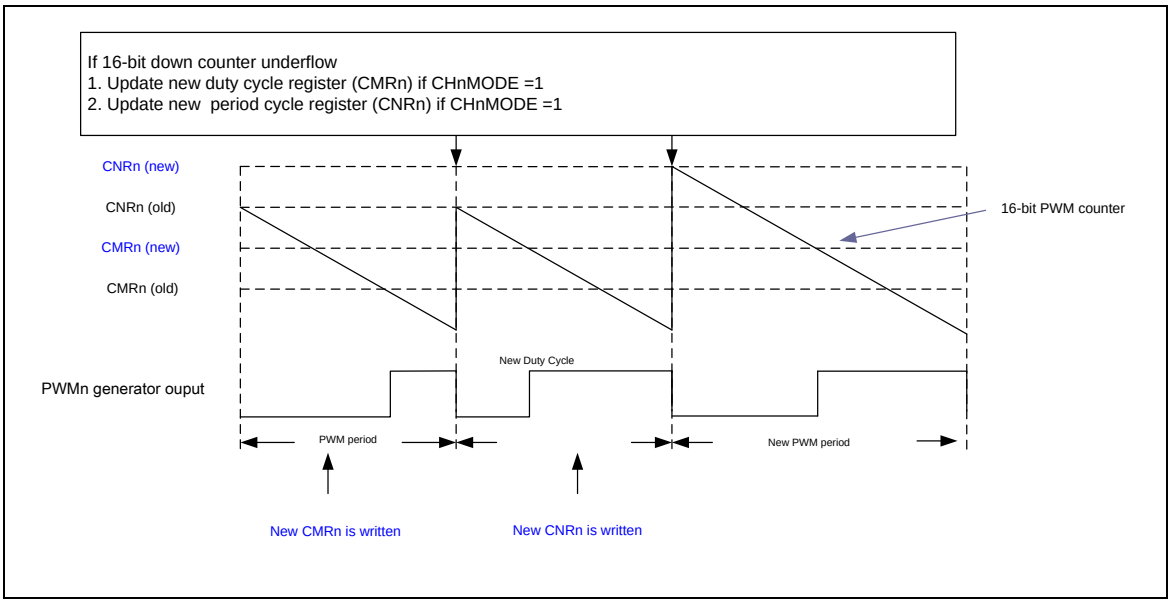

Figure 5.10-6 Edge-aligned PWM

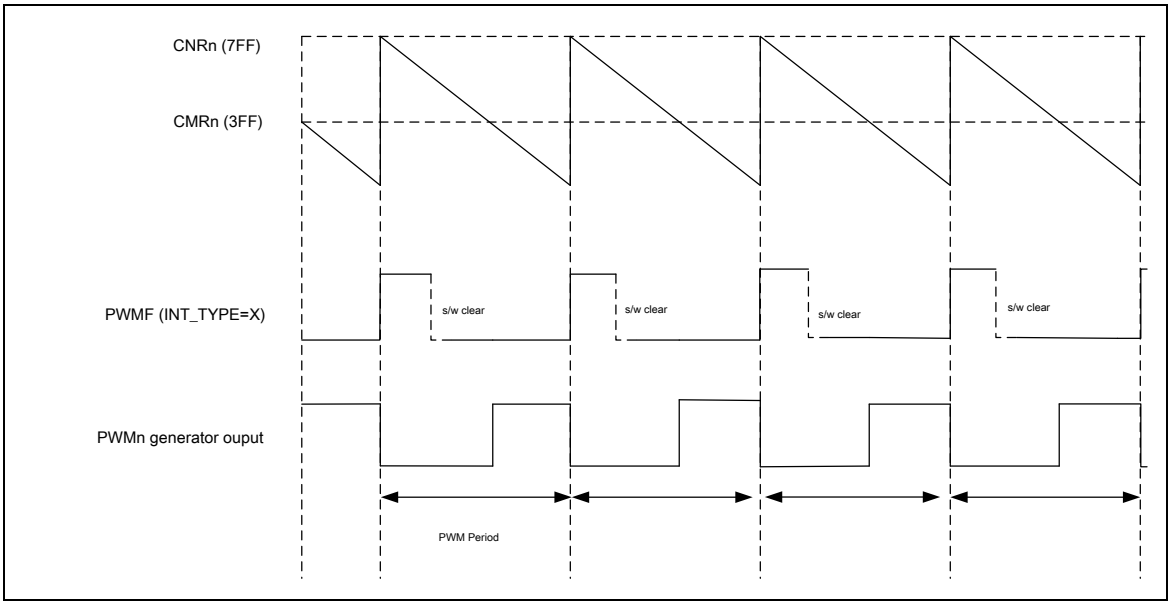

Figure 5.10-7 PWM Edge-aligned Waveform Output

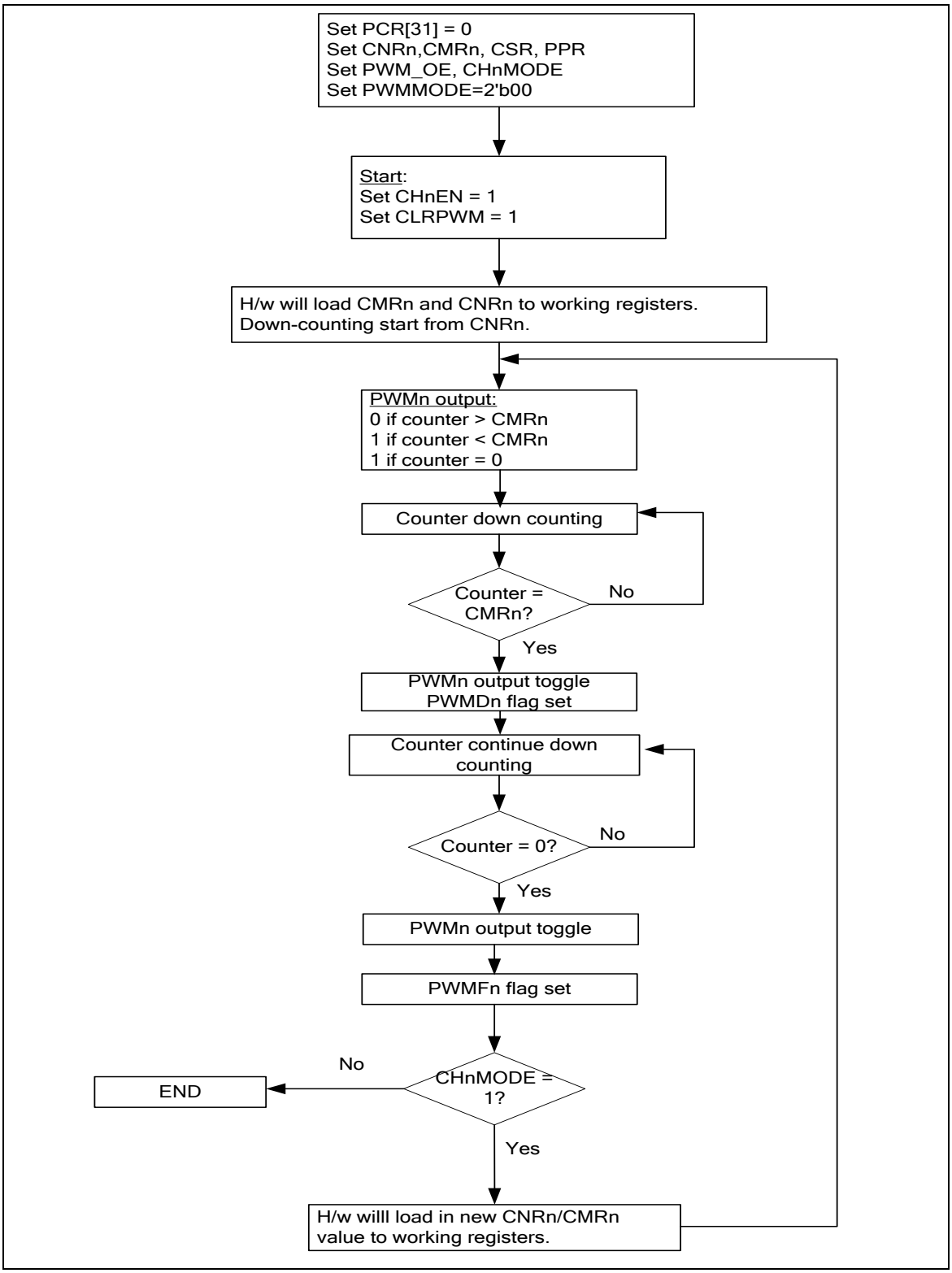

Figure 5.10-8 Edge-aligned Flow Diagram

The PWM period and duty control are decided by PWM down-counter register (CNRn) and PWM comparator register (CMRn). The PWM-Timer timing operation is shown in Figure 5.10-10. The pulse width modulation follows the formula below and the legend of PWM-Timer Comparator is shown in Figure 5.10-9. Note that the corresponding GPIO pins must be configured as PWM function (enable PWMPOE) for the corresponding PWM channel.

PWM frequency = PWMxy_CLK/((prescale+1)*(clock divider)/(CNR+1)); where xy, could be 01, 23 or 45 depending on the selected PWM channel

Duty ratio = (CMR+1)/(CNR+1)

CMR >= CNR: PWM output is always high

CMR < CNR: PWM low width= (CNR-CMR) unit[1]; PWM high width = (CMR+1) unit

CMR = 0: PWM low width = (CNR) unit; PWM high width = 1 unit

Note: Unit = one PWM clock cycle.

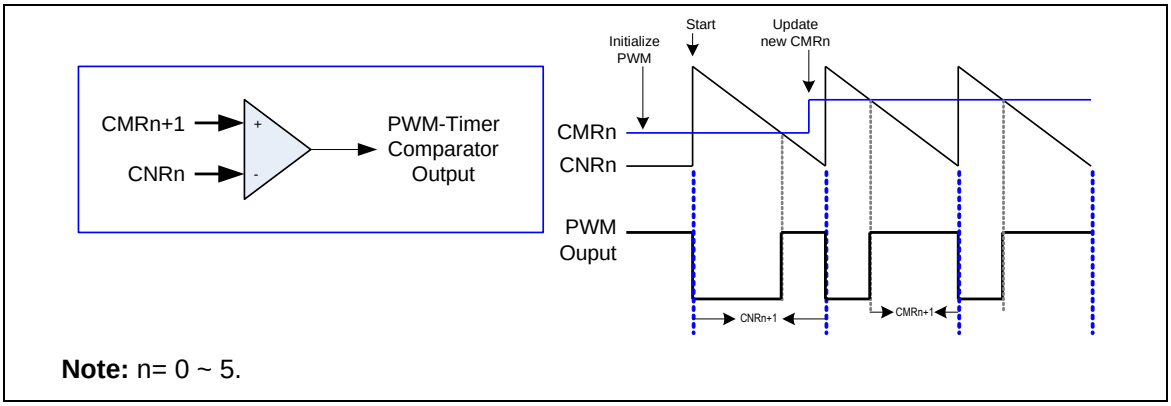

Note: n= 0 ~ 5.

Figure 5.10-9 Legend of Internal Comparator Output of PWM-Timer

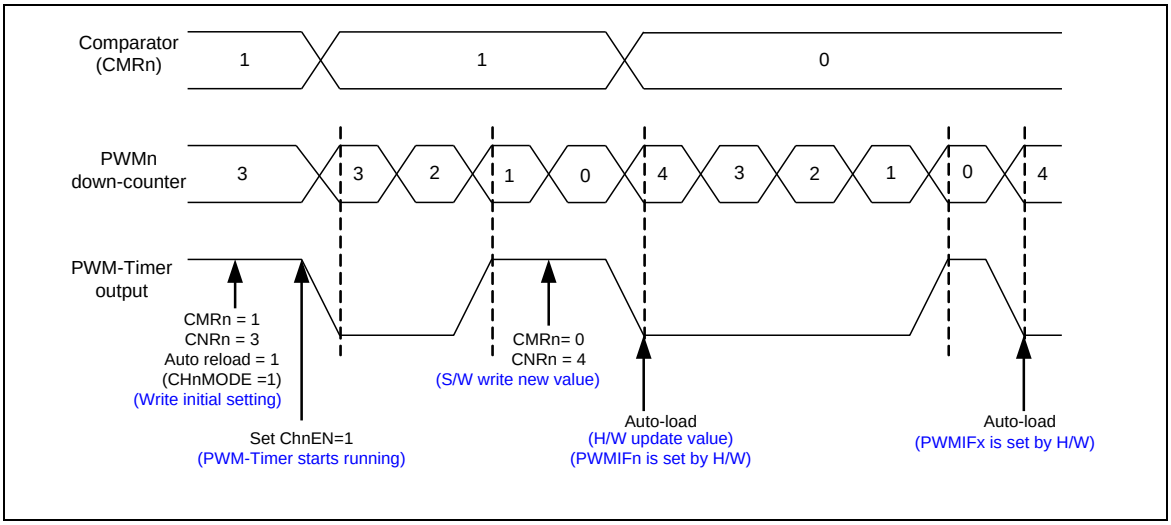

Figure 5.10-10 PWM Timer Operation Timing

Center-Aligned PWM (up/down counter)

The center-aligned PWM signals are produced by the module when the PWM time base is configured in an Up/Down Counting mode. The PWM counter will start counting-up from 0 to match the value of CMRn (old); this will cause the toggling of the PWMn generator output to high. The counter will continue counting to match with the CNRn (old). Upon reaching this states counter is configured automatically to down counting, when PWM counter matches the CMRn (old) value again the PWMn generator output toggles to low. Once the PWM counter underflows it will update the PWM period register CNRn (new) and duty cycle register CMRn (new) with CHnMODE = 1.

In Center-aligned mode, the PWM period interrupt is requested at down-counter underflow if INT_TYPE (PIER[17]) =0, i.e. at start (end) of each PWM cycle or at up-counter matching with CNRn if INT_TYPE (PIER[17]) =1, i.e. at center point of PWM cycle.

Figure 5.10-11, Figure 5.10-12 and Figure 5.10-13 describe the Center-aligned PWM timing and operation flow.

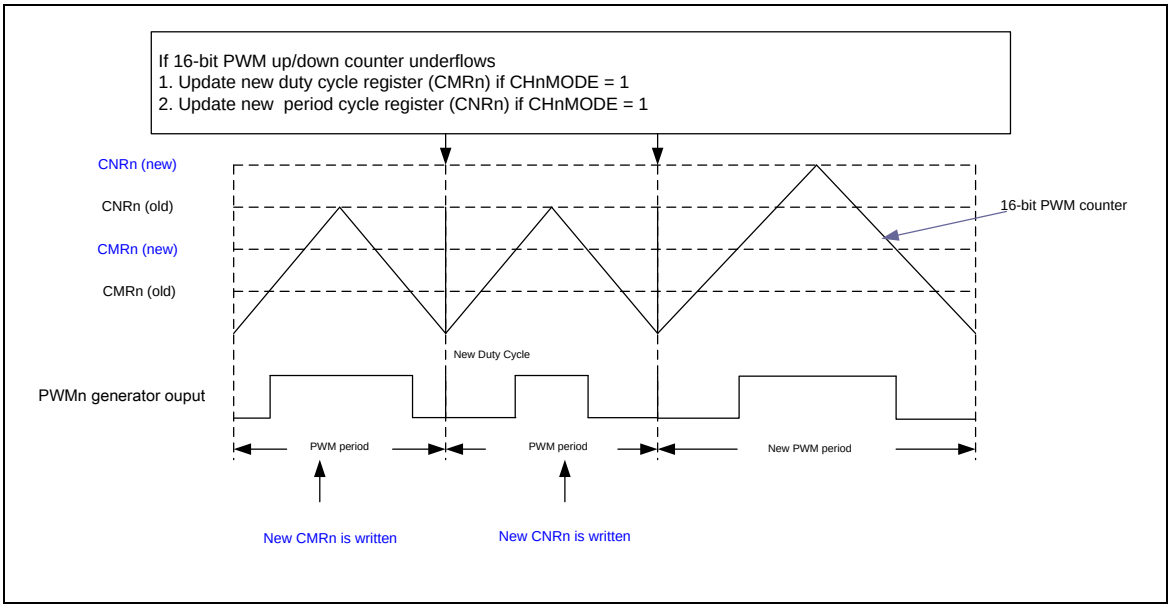

Figure 5.10-11 Center-aligned Mode

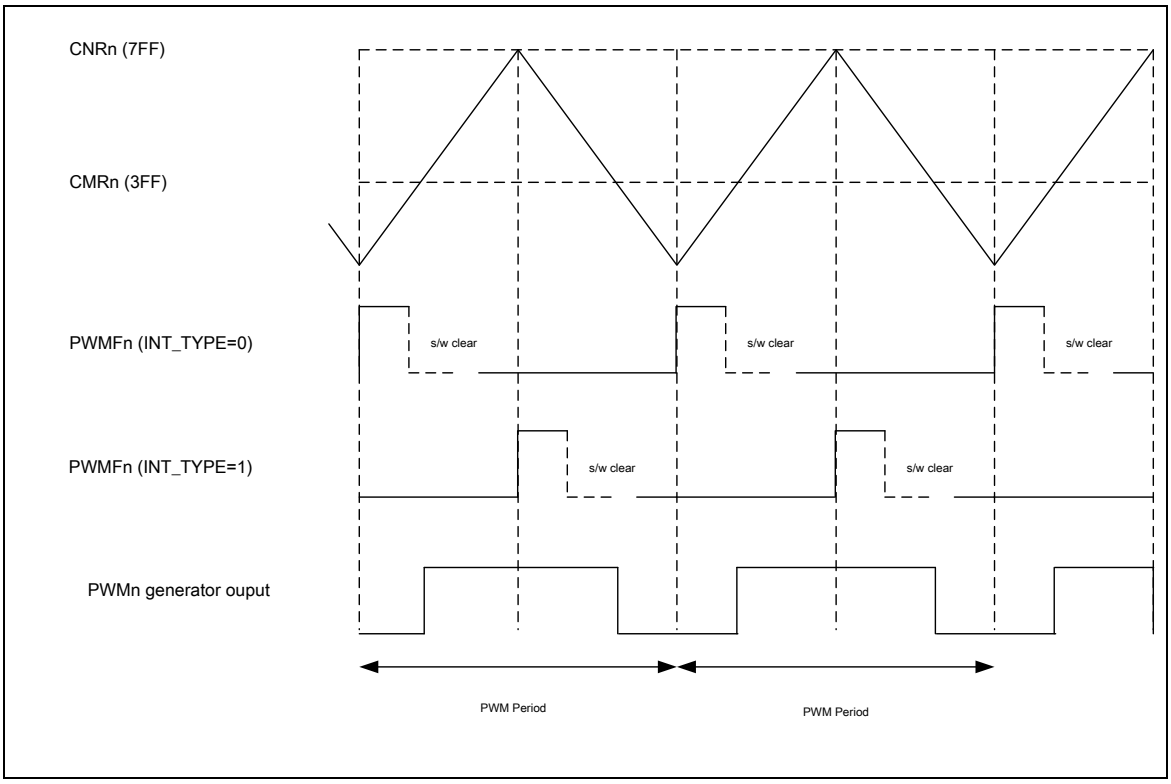

Figure 5.10-12 PWM Center-aligned Waveform Output

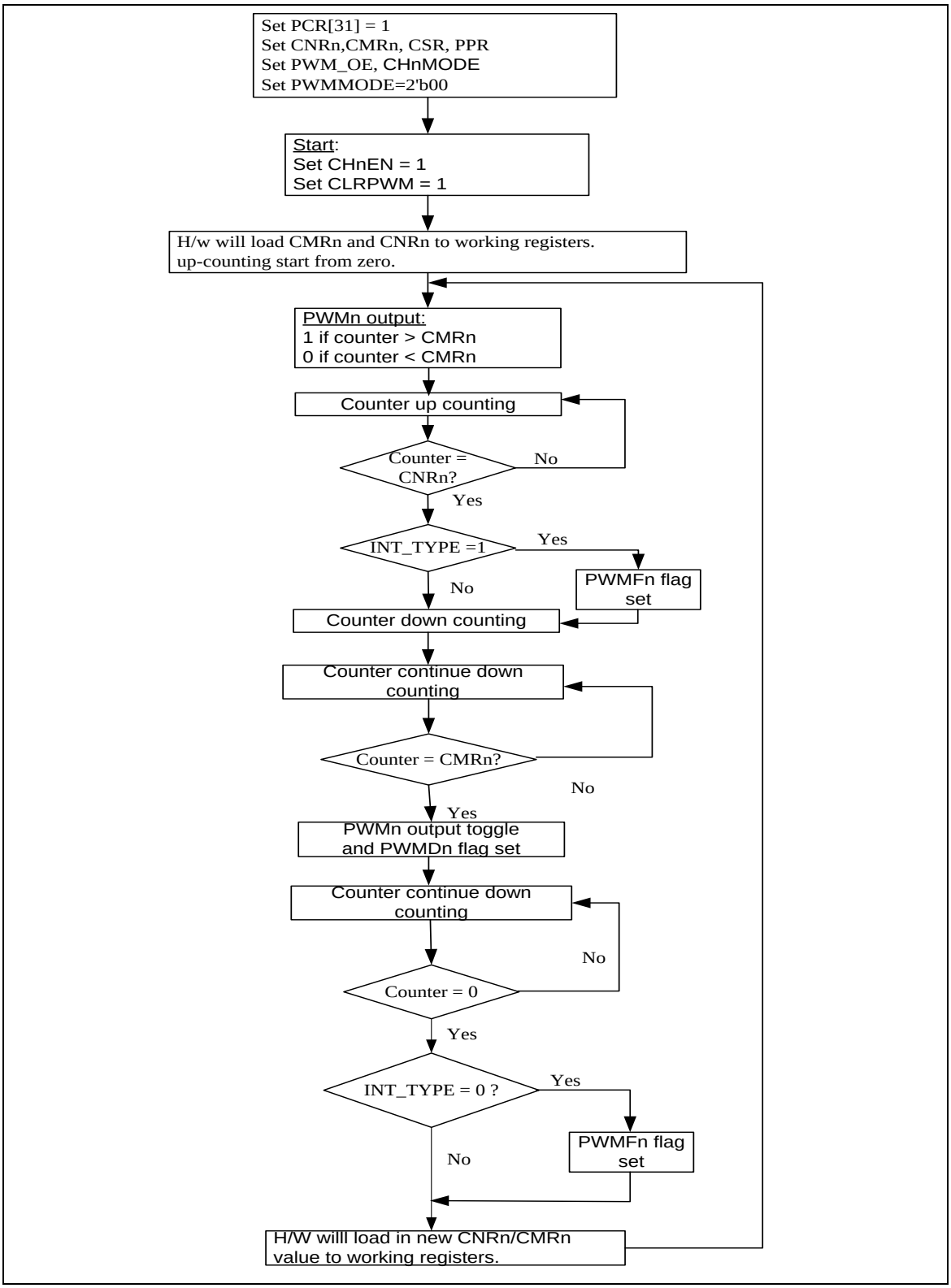

Figure 5.10-13 Center-aligned Flow Diagram (INT_TYPE = 0)

5.10.4.2 PWM Double Buffering, Auto-reload and One-shot Operation

The NuMicro Mini51™ series PWM Timers have double buffering function the reload value is updated at the start of next period without affecting current timer operation. The PWM counter value can be written into CNRn.

The bit CHnMOD in PWM Control Register (PCR) defines PWMn operation in auto-reload or one-shot mode If CHnMOD is set to "1"; the auto-reload operation loads CNRn to PWM counter when PWM counter reaches zero. If CNRn is set to zero, the PWM counter will be halted when the PWM counter counts to zero. If CHnMOD is set as "0", the counter will be stopped immediately. PWM0~PWM5 performs the same function as PWMn.

Note: One-shot operation only support edge alignment mode.

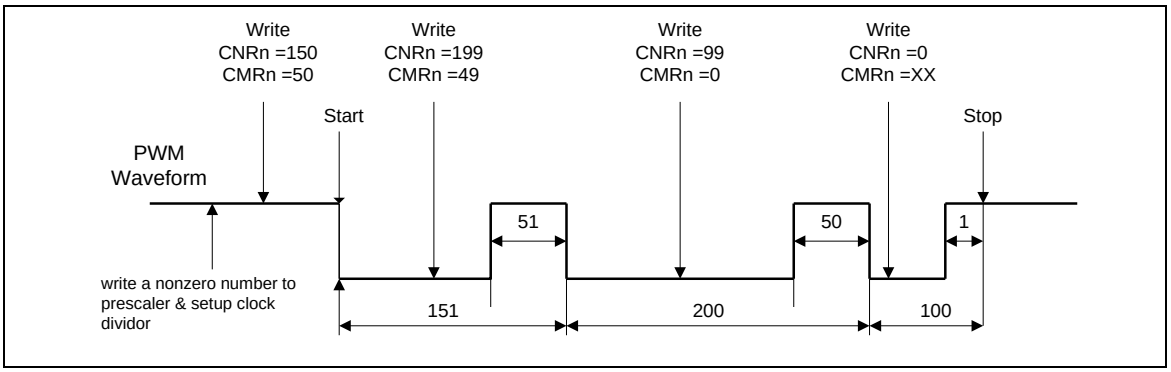

Figure 5.10-14 PWM Double Buffering Illustration

5.10.4.3 Modulate Duty Ratio

The double buffering function allows CMRn to be written at any point in current cycle. The loaded value will take effect from next cycle.

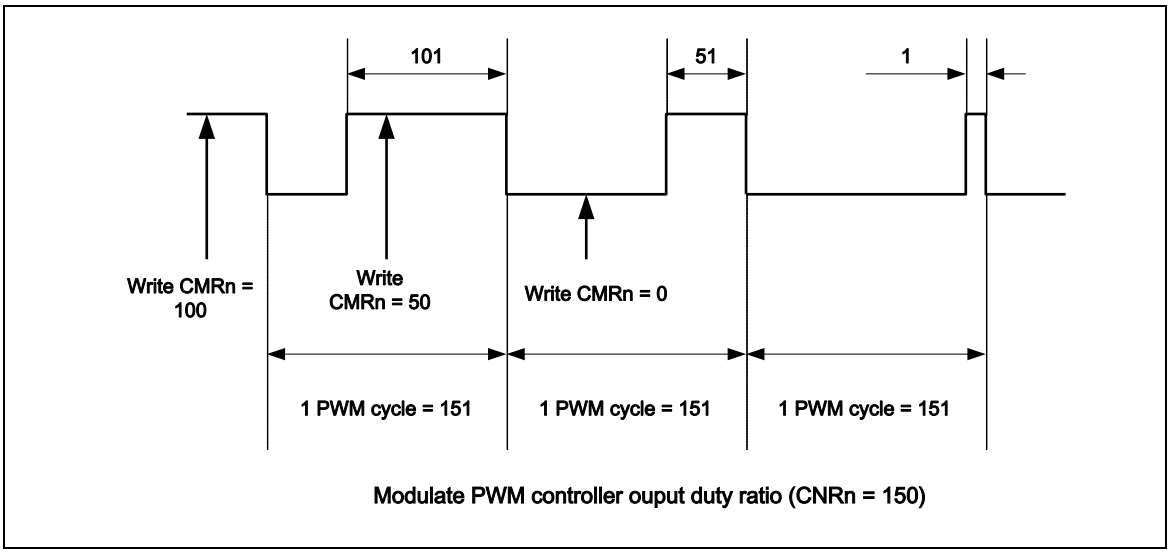

Figure 5.10-15 PWM Controller Output Duty Ratio

5.10.5 PWM Operation Modes

This powerful PWM unit supports independent mode which may be applied to DC or BLDC motor system, Complementary mode with dead-zone insertion which may be used in the application of AC induction motor and synchronous motor, and Synchronous mode that makes both pins of each pair are in phase. Besides, the Group mode, which forces the PWM0, PWM2 and PWM4 synchronous with PWM0 generator, may simplify updating duty control in DC and BLDC motor applications.

5.10.5.1 Independent mode

Independent mode is enabled when PWMMOD[1:0] = 00.

By default, the PWM is operated in independent mode with six PWM channels outputs. Each channel is running off its own duty-cycle generator module.

Note: Only even channels (PWM0, PWM2 and PWM4) can be set as inverter bit (CHnINV, n = 0, 2, 4) in independent mode.

5.10.5.2 Complementary mode

Complementary mode is enabled when PWMMOD[1:0] = 01.

In this module there are three duty-cycle generators utilized for complementary mode, with total of three PWM output pair pins in this module. The total six PWM outputs are grouped into output pairs of even and odd numbered outputs. In complimentary modes, the internal odd PWM signal PGn, must always be the complement of the corresponding even PWM signal. For example, PG1 will be the complement of PG0. PG3 will be the complement of PG2 and PG5 will be the complement of PG4. The time base for the PWM module is provided by its own 16-bit timer, which also incorporates selectable pre-scalar options.

5.10.5.3 Dead-zone insertion

The dead-zone generator inserts an “off” period called “dead-zone” between the turnings off of one pin to the turning on of the complementary pin of the paired pins. This is to prevent damage to the power switching devices that will be connected to the PWM output pins. The complementary output pair mode has an 8-bit down counter used to produce the dead-zone insertion. The complementary outputs are delayed until the timer counts down to zero.

The dead-zone can be calculated from the following formula:

dead-zone = PWM_CLK * (DZIxy[7:0]+1). where xy, could be 01, 23, 45

The timing diagram below indicates the dead-zone insertion for one pair of PWM signals.

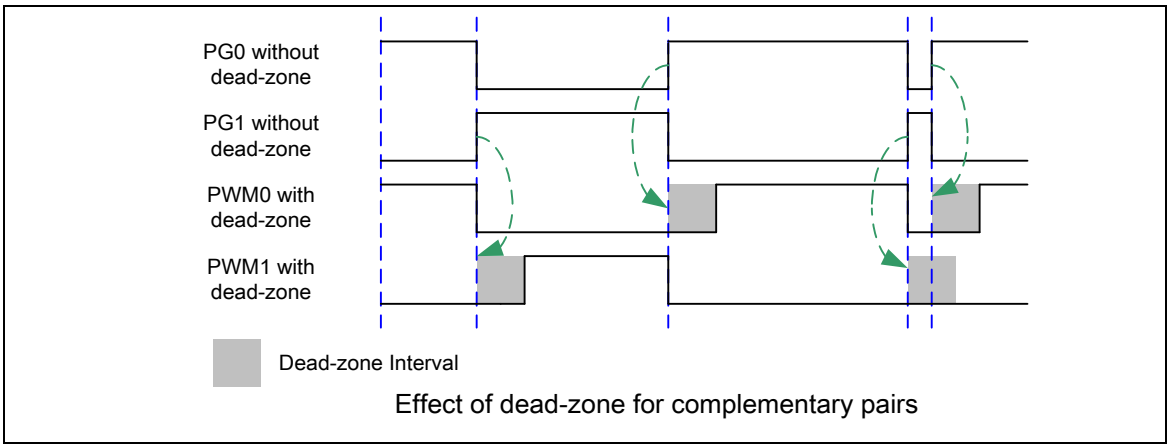

Figure 5.10-16 Dead-zone Insertion

In Power inverter applications, a dead-zone insertion avoids the upper and lower switches of the half bridge from being active at the same time. Hence the dead-zone control is crucial to proper operation of a system. Some amount of time must be provided between turning off of one PWM output in a complementary pair and turning on the other transistor as the power output devices cannot switch instantaneously.

5.10.5.4 Synchronous mode

Synchronous mode is enabled when PWMMOD[1:0] = 10.

In the synchronization mode the PWM pair signals from PWM Generator are in-phase.

PG1=PG0, PG3=PG2 and PG5=PG4.

5.10.5.5 Group mode

Group mode is enabled when GRP (PCR[30]) = 1.

This device support Group mode control. This control allows all even PWM channels output to be duty controllable by PWM0 duty register.

If GRP = 1, both (PG2, PG3) and (PG4, PG5) pairs will follow (PG0, PG1), which imply;

PG4 = PG2 = PG0;

PG5 = PG3 = PG1 = invert (PG0) if Complementary mode is enabled (PWMMOD[1:0] = 01)

For Application, Please do not use Group and Synchronous mode simultaneously because the Synchronous mode will be inactive.

5.10.6 Polarity Control

Each PWM port of PWM0 ~ PWM5 has independent polarity control to configure the polarity of active state of PWM output. By default, the PWM output is active high.

The following diagram shows the initial state before PWM starts with different polarity settings.

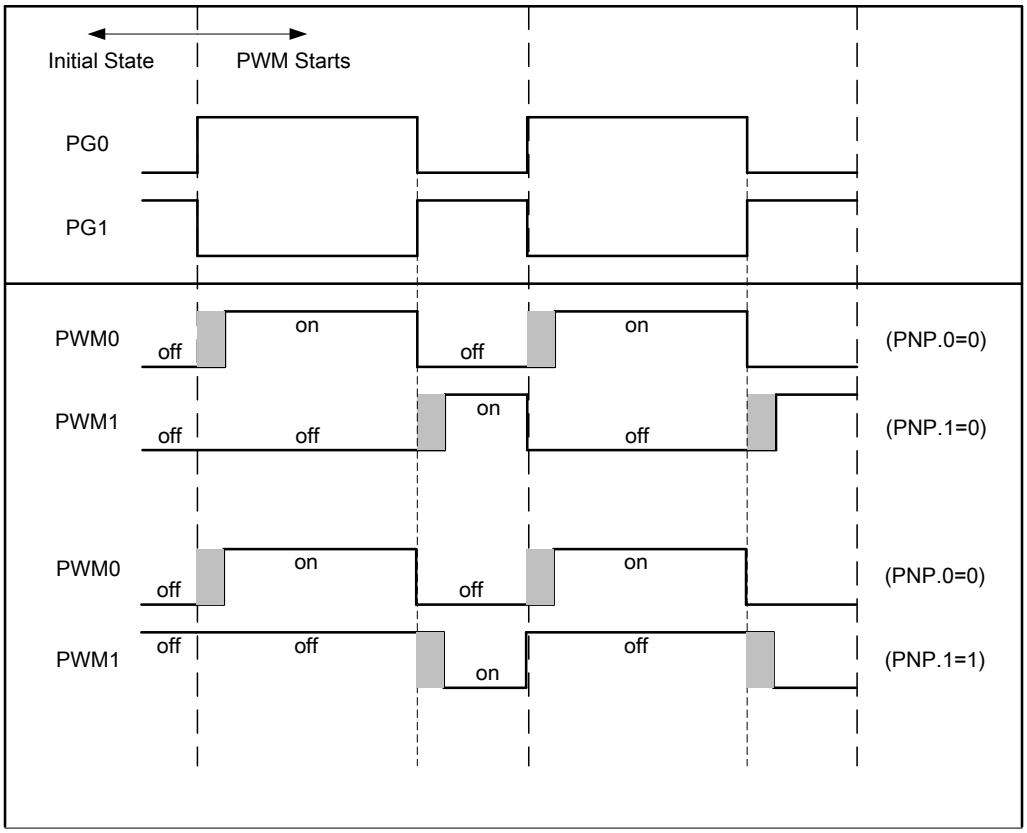

NPx: Negative Polarity control bits; It controls the PWM output initial state and polarity

Dead-zone insertion; It is only effective in complementary mode

Note: Only Odd channels can be set inverter bit when dead-zone insertion and polarity control.

PWM output with dead-zone insertion and polarity control

Figure 5.10-17 Initial State and Polarity Control with Rising Edge Dead-zone Insertion

5.10.7 PWM for Motor Control Interrupt Architecture

There are 4 interrupt sources for a PWM unit, which are PWM period flag (PWMPIF), PWM duty interrupt(PWMDIF), Brake0 flag (BKF0) and Brake1 flag (BKF1). The bit BRKIE (PIER[16]) controls the brake interrupt enable; the bit PWMPIEn (PIER[0] ~ PIER[5]) controls the PWM periodic interrupt enable; and the bit PWMDIEn (PIER[8] ~ PIER[13]) controls the PWM duty interrupt enable. Note that all the interrupt flags are set by hardware and must be cleared by software.

Figure 5.10-18 demonstrates the architecture of Motor Control PWM interrupts.

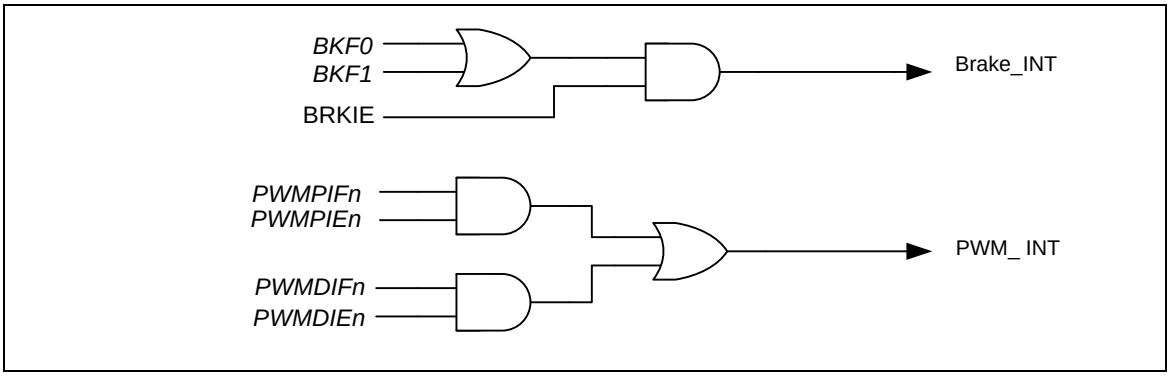

Figure 5.10-18 Motor Control PWM Architecture

5.10.8 PWM Brake Function

This device supports two external brake pins: BKP0 and BKP1 pins. The Brake function is controlled by the contents of the PFBCON registers.

Since the both brake conditions being asserted will automatically rise the BKF flag, user program can poll these brake flag bits or enable PWM's brake interrupt to determine which condition causes a brake to occur.

Note: When a brake happens, the PWM0 ~ PWM5 enable bits will be disabled by hardware.

User program must write the PWM enable bits again to release PWM Brake state.

5.10.9 PWM Controller Register Map

R: read only, **W**: write only, **R/W**: both read and write

Register	Offset	R/W	Description	Reset Value
PWM_BA = 0x4004_0000				
PPR	PWM_BA+0x00	R/W	PWM Pre-scale Register	0x0000_0000
CSR	PWM_BA+0x04	R/W	PWM Clock Select Register	0x0000_0000
PCR	PWM_BA+0x08	R/W	PWM Control Register	0x0000_0000
CNR0	PWM_BA+0x0C	R/W	PWM Counter Register 0	0x0000_0000
CNR1	PWM_BA+0x10	R/W	PWM Counter Register 1	0x0000_0000
CNR2	PWM_BA+0x14	R/W	PWM Counter Register 2	0x0000_0000
CNR3	PWM_BA+0x18	R/W	PWM Counter Register 3	0x0000_0000
CNR4	PWM_BA+0x1C	R/W	PWM Counter Register 4	0x0000_0000
CNR5	PWM_BA+0x20	R/W	PWM Counter Register 5	0x0000_0000
CMR0	PWM_BA+0x24	R/W	PWM Comparator Register 0	0x0000_0000
CMR1	PWM_BA+0x28	R/W	PWM Comparator Register 1	0x0000_0000
CMR2	PWM_BA+0x2C	R/W	PWM Comparator Register 2	0x0000_0000
CMR3	PWM_BA+0x30	R/W	PWM Comparator Register 3	0x0000_0000
CMR4	PWM_BA+0x34	R/W	PWM Comparator Register 4	0x0000_0000
CMR5	PWM_BA+0x38	R/W	PWM Comparator Register 5	0x0000_0000
PIER	PWM_BA+0x54	R/W	PWM Interrupt Enable Register	0x0000_0000
PIIR	PWM_BA+0x58	R/W	PWM Interrupt Indication Register	0x0000_0000
PWMPOE	PWM_BA+0x5C	R/W	PWM Output Enable for channel 0~5	0x0000_0000
PFBCON	PWM_BA+0x60	R/W	PWM Fault Brake Control Register	0x0000_0000
PDZIR	PWM_BA+0x64	R/W	PWM dead-zone Interval Register	0x0000_0000

5.10.10 PWM Controller Register

PWM Pre-Scale Register (PPR)

Register	Offset	R/W	Description	Reset Value
PPR	PWM_BA+0x00	R/W	PWM Pre-scale Register	0x0000_0000

31	30	29	28	27	26	25	24
-							
23	**22**	**21**	**20**	**19**	**18**	**17**	**16**
CP45							
15	**14**	**13**	**12**	**11**	**10**	**9**	**8**
CP23							
7	**6**	**5**	**4**	**3**	**2**	**1**	**0**
CP01							

Bits	Description	
[31:24]	-	**Reserved**
[23:16]	**CP45[7:0]**	**Clock Prescaler 4 (PWM Counter 4 and 5 for group)** Clock input is divided by (CP45 + 1) before it is fed to the corresponding PWM counter. If CP45 = 0, the clock prescaler 4 output clock will be stopped. So the corresponding PWM counter will also be stopped.
[15:8]	**CP23[7:0]**	**Clock Prescaler 2 (PWM Counter 2 and 3 for group)** Clock input is divided by (CP23 + 1) before it is fed to the corresponding PWM counter. If CP23 = 0, the clock prescaler 2 output clock will be stopped. So the corresponding PWM counter will also be stopped.
[7:0]	**CP01[7:0]**	**Clock Prescaler 0 (PWM Counter 0 and 1 for group)** Clock input is divided by (CP01 + 1) before it is fed to the corresponding PWM counter If CP01 = 0, the clock prescaler 0 output clock will be stopped. So the corresponding PWM counter will also be stopped.

PWM Clock Selector Register (CSR)

Register	Offset	R/W	Description	Reset Value
CSR	PWM_BA+0x04	R/W	PWM Clock Select Register	0x0000_0000

31	30	29	28	27	26	25	24
-							
23	**22**	**21**	**20**	**19**	**18**	**17**	**16**
-	CSR5			-	CSR4		
15	**14**	**13**	**12**	**11**	**10**	**9**	**8**
-	CSR3			-	CSR2		
7	**6**	**5**	**4**	**3**	**2**	**1**	**0**
-	CSR1			-	CSR0		

Bits	Description	
[31:23]	-	**Reserved**
[22:20]	**CSR5[2:0]**	**Timer 5 Clock Source Selection** Select clock input for PWM timer. CSR5 [2:0] / Input clock divided by 100 / 1 011 / 16 010 / 8 001 / 4 000 / 2 101, 110, 111 / Reserved
[19]	-	**Reserved**
[18:16]	**CSR4[2:0]**	**Timer 4 Clock Source Selection** Select clock input for PWM timer. (Table is the same as CSR5.)
[15]	-	**Reserved**
[14:12]	**CSR3[2:0]**	**Timer 3 Clock Source Selection** Select clock input for PWM timer. (Table is the same as CSR5.)
[11]	-	**Reserved**

Bits	Description	
[10:8]	**CSR2[2:0]**	**Timer 2 Clock Source Selection** Select clock input for PWM timer. (Table is the same as CSR5.)
[7]	**-**	**Reserved**
[6:4]	**CSR1[2:0]**	**Timer 1 Clock Source Selection** Select clock input for PWM timer. (Table is the same as CSR5.)
[3]	**-**	**Reserved**
[2:0]	**CSR0[2:0]**	**Timer 0 Clock Source Selection** Select clock input for PWM timer. (Table is the same as CSR5.)

PWM Control Register (PCR)

Register	Offset	R/W	Description	Reset Value
PCR	PWM_BA+0x08	R/W	PWM Control Register	0x0000_0000

31	30	29	28	27	26	25	24
PWMTYPE	GRP	PWMMOD		CLRPWM	DZEN45	DZEN23	DZEN01
23	22	21	20	19	18	17	16
CH5MOD	CH5INV	-	CH5EN	CH4MOD	CH4INV	-	CH4EN
15	14	13	12	11	10	9	8
CH3MOD	CH3INV	-	CH3EN	CH2MOD	CH2INV	-	CH2EN
7	6	5	4	3	2	1	0
CH1MOD	CH1INV	-	CH1EN	CH0MOD	CH0INV	DB_MODE	CH0EN

Bits	Description	
[31]	**PWMTYPE**	**PWM Aligned Type Selection Bit** 0 = Edge-aligned type. 1 = Center-aligned type.
[30]	**GRP**	**Group bit** 1 = Unify the signals timing of PWM0, PWM2 and PWM4 in the same phase which is controlled by PWM0. 0 = The signals timing of PWM0, PWM2 and PWM4 are independent.
[29:28]	**PWMMOD[1:0]**	**PWM Operation Mode Selection** PWMMOD[1:0] — Mode 00 — Independent mode 01 — Complementary mode 10 — Synchronized mode 11 — Reserved
[27]	**CLRPWM**	**Clear PWM Counter Control Bit** 1 = 16-bit PWM counter cleared to 0x000. 0 = Do not clear PWM counter. **Note:** It is automatically cleared by hardware.
[26]	**DZEN45**	**Dead-zone 4 Generator Enable/Disable (PWM4 and PWM5 pair for PWM group)** 1 = Enabled. 0 = Disabled. **Note:** When the dead-zone generator is enabled, the pair of PWM4 and PWM5 becomes a complementary pair for PWM group.

Bits	Description	
[25]	**DZEN23**	**Dead-zone 2 Generator Enable/Disable (PWM2 and PWM3 pair for PWM group)** 1 = Enabled. 0 = Disabled. **Note:** When the dead-zone generator is enabled, the pair of PWM2 and PWM3 becomes a complementary pair for PWM group.
[24]	**DZEN01**	**Dead-zone 0 Generator Enable/Disable (PWM0 and PWM1 pair for PWM group)** 1 = Enabled. 0 = Disabled. **Note:** When the dead-zone generator is enabled, the pair of PWM0 and PWM1 becomes a complementary pair for PWM group.
[23]	**CH5MOD**	**PWM-Timer 5 Auto-reload/One-Shot Mode** 1 = Auto-reload mode. 0 = One-shot mode. **Note:** If there is a rising transition at this bit, it will cause CNR5 and CMR5 cleared.
[22]	**CH5INV**	**PWM-Timer 5 Output Inverter ON/OFF** 1 = Inverter ON. 0 = Inverter OFF. **Note:** Only even channels (PWM0, PWM2 and PWM4) can be set as inverter bit in independent mode
[21]	**-**	**Reserved**
[20]	**CH5EN**	**PWM-Timer 5 Enable/Disable Start Run** 1 = Corresponding PWM-timer start run Enabled. 0 = Corresponding PWM-timer running Stopped.
[19]	**CH4MOD**	**PWM-Timer 4 Auto-reload/One-Shot Mode** 1 = Auto-reload mode. 0 = One-shot mode. **Note:** If there is a rising transition at this bit, it will cause CNR4 and CMR4 cleared.
[18]	**CH4INV**	**PWM-Timer 4 Output Inverter ON/OFF** 1 = Inverter ON. 0 = Inverter OFF.
[17]	**-**	**Reserved**
[16]	**CH4EN**	**PWM-Timer 4 Enable/Disable Start Run** 1 = Corresponding PWM-timer start run Enabled. 0 = Corresponding PWM-timer running Stopped.
[15]	**CH3MOD**	**PWM-Timer 3 Auto-reload/One-Shot Mode** 1 = Auto-reload mode. 0 = One-shot mode. **Note:** If there is a rising transition at this bit, it will cause CNR3 and CMR3 cleared.

Bits	Description	
[14]	**CH3INV**	**PWM-Timer 3 Output Inverter ON/OFF** 1 = Inverter ON. 0 = Inverter OFF. **Note:** Only even channels (PWM0, PWM2 and PWM4) can be set as inverter bit in independent mode.
[13]	**-**	**Reserved**
[12]	**CH3EN**	**PWM-Timer 3 Enable/Disable Start Run** 1 = Corresponding PWM-timer start run Enabled. 0 = Corresponding PWM-timer running Stopped.
[11]	**CH2MOD**	**PWM-Timer 2 Auto-reload/One-Shot Mode** 1 = Auto-reload mode. 0 = One-shot mode. **Note:** If there is a rising transition at this bit, it will cause CNR2 and CMR2 cleared.
[10]	**CH2INV**	**PWM-Timer 2 Output Inverter ON/OFF** 1 = Inverter ON. 0 = Inverter OFF.
[9]	**-**	**Reserved**
[8]	**CH2EN**	**PWM-Timer 2 Enable/Disable Start Run** 1 = Corresponding PWM-timer start run Enabled. 0 = Corresponding PWM-timer running Stopped.
[7]	**CH1MOD**	**PWM-Timer 1 Auto-reload/One-Shot Mode** 1 = Auto-reload mode. 0 = One-shot mode. **Note:** If there is a rising transition at this bit, it will cause CNR1 and CMR1 cleared.
[6]	**CH1INV**	**PWM-Timer 1 Output Inverter ON/OFF** 1 = Inverter ON. 0 = Inverter OFF. **Note:** Only even channels (PWM0, PWM2 and PWM4) can be set as inverter bit in independent mode
[5]	**-**	**Reserved**
[4]	**CH1EN**	**PWM-Timer 1 Enable/Disable Start Run** 1 = Corresponding PWM-timer start run Enabled. 0 = Corresponding PWM-timer running Stopped.
[3]	**CH0MOD**	**PWM-Timer 0 Auto-reload/One-Shot Mode** 1 = Auto-reload mode. 0 = One-shot mode. **Note:** If there is a rising transition at this bit, it will cause CNR0 and CMR0 cleared.

Bits	Description	
[2]	**CH0INV**	**PWM-Timer 0 Output Inverter ON/OFF** 1 = Inverter ON. 0 = Inverter OFF.
[1]	**DB_MODE**	**PWM Debug Mode Configuration Bit (Available in DEBUG mode only)** 1 = Normal mode: The timer continues to operate normally May be dangerous in some cases since a constant duty cycle is applied to the inverter (no more interrupts serviced). 0 = Safe mode: The timer is frozen and PWM outputs are shut down Safe state for the inverter. The timer can still be re-started from where it stops.
[0]	**CH0EN**	**PWM-Timer 0 Enable/Disable Start Run** 1 = Corresponding PWM-timer start run Enabled. 0 = Corresponding PWM-timer running Stopped.

PWM Counter Register 0-5 (CNR0-5)

Register	Offset	R/W	Description	Reset Value
CNR0	PWM_BA+0x0C	R/W	PWM Counter Register 0	0x0000_0000
CNR1	PWM_BA+0x10	R/W	PWM Counter Register 1	0x0000_0000
CNR2	PWM_BA+0x14	R/W	PWM Counter Register 2	0x0000_0000
CNR3	PWM_BA+0x18	R/W	PWM Counter Register 3	0x0000_0000
CNR4	PWM_BA+0x1C	R/W	PWM Counter Register 4	0x0000_0000
CNR5	PWM_BA+0x20	R/W	PWM Counter Register 5	0x0000_0000

31	30	29	28	27	26	25	24
-							
23	**22**	**21**	**20**	**19**	**18**	**17**	**16**
-							
15	**14**	**13**	**12**	**11**	**10**	**9**	**8**
CNRn							
7	**6**	**5**	**4**	**3**	**2**	**1**	**0**
CNRn							

Bits	Description	
[31:16]	**-**	**Reserved**
[15:0]	**CNRn** **n = 0 – 5**	**PWM Counter/Timer Loaded Value** CNRn determines the PWM period. Edge-aligned mode: PWM frequency = PWMxy_CLK/((prescale+1)*(clock divider))/(CNRn+1); where xy, could be 01, 23, 45 depending on the selected PWM channel. Duty ratio = (CMRn+1)/(CNRn+1). CMRn >= CNRn: PWM output is always high. CMRn < CNRn: PWM low width = (CNRn-CMRn) unit; PWM high width = (CMR+1) unit. CMRn = 0: PWM low width = (CNRn) unit; PWM high width = 1 unit. Center-aligned mode: PWM frequency = PWMxy_CLK/((prescale+1)*(clock divider))/ (2*CNRn+1); where xy, could be 01, 23, 45 depending on the selected PWM channel. Duty ratio = (CNRn - CMRn)/(CNRn+1). CMRn >= CNRn: PWM output is always low. CMRn < CNRn: PWM low width = (CMRn + 1) x 2 unit; PWM high width = (CNRn - CMRn) x 2 unit.

Bits	Description	
		CMRn = 0: PWM low width = 2 unit; PWM high width = (CNRn) x 2 unit. (Unit = one PWM clock cycle) **Note:** Any write to CNRn will take effect in next PWM cycle.

PWM Comparator Register 0-5 (CMR0-5)

Register	Offset	R/W	Description	Reset Value
CMR0	PWM_BA+0x24	R/W	PWM Comparator Register 0	0x0000_0000
CMR1	PWM_BA+0x28	R/W	PWM Comparator Register 1	0x0000_0000
CMR2	PWM_BA+0x2C	R/W	PWM Comparator Register 2	0x0000_0000
CMR3	PWM_BA+0x30	R/W	PWM Comparator Register 3	0x0000_0000
CMR4	PWM_BA+0x34	R/W	PWM Comparator Register 4	0x0000_0000
CMR5	PWM_BA+0x38	R/W	PWM Comparator Register 5	0x0000_0000

31	30	29	28	27	26	25	24
-							
23	**22**	**21**	**20**	**19**	**18**	**17**	**16**
-							
15	**14**	**13**	**12**	**11**	**10**	**9**	**8**
CMRn							
7	**6**	**5**	**4**	**3**	**2**	**1**	**0**
CMRn							

Bits	Description	
[31:16]	**-**	**Reserved**
[15:0]	**CMRn** **n = 0 – 5**	**PWM Comparator Register** CMR determines the PWM duty. Edge-aligned mode: PWM frequency = PWMxy_CLK/((prescale+1)*(clock divider))/(CNRn+1); where xy, could be 01, 23, 45 depending on the selected PWM channel. Duty ratio = (CMRn+1)/(CNRn+1). CMRn >= CNRn: PWM output is always high. CMRn < CNRn: PWM low width = (CNRn-CMRn) unit; PWM high width = (CMR+1) unit. CMRn = 0: PWM low width = (CNRn) unit; PWM high width = 1 unit Center-aligned mode: PWM frequency = PWMxy_CLK/((prescale+1)*(clock divider)) /(2*CNRn+1); where xy, could be 01, 23, 45 depending on the selected PWM channel. Duty ratio = (CNRn - CMRn)/(CNRn+1). CMRn >= CNRn: PWM output is always low. CMRn < CNRn: PWM low width = (CMRn + 1) x 2 unit; PWM high width = (CNRn - CMRn) x 2 unit.

Bits	Description	
		CMRn = 0: PWM low width = 2 unit; PWM high width = (CNRn) x 2 unit (Unit = One PWM clock cycle) **Note:** Any write to CNRn will take effect in the next PWM cycle.

PWM Interrupt Enable Register (PIER)

Register	Offset	R/W	Description	Reset Value
PIER	PWM_BA+0x54	R/W	PWM Interrupt Enable Register	0x0000_0000

31	30	29	28	27	26	25	24
-							
23	**22**	**21**	**20**	**19**	**18**	**17**	**16**
-						INT_TYPE	BRKIE
15	**14**	**13**	**12**	**11**	**10**	**9**	**8**
-		PWMDIE5	PWMDIE4	PWMDIE3	PWMDIE2	PWMDIE1	PWMDIE0
7	**6**	**5**	**4**	**3**	**2**	**1**	**0**
-		PWMPIE5	PWMPIE4	PWMPIE3	PWMPIE2	PWMPIE1	PWMPIE0

Bits	Description	
[31:18]	**-**	**Reserved**
[17]	**INT_TYPE**	**PWM Interrupt Type Selection Bit** 1 = PWMPIFn will be set if PWM counter matches CNRn register. 0 = PWMPIFn will be set if PWM counter underflows. **Note:** This bit is effective when PWM in central align mode only.
[16]	**BRKIE**	**Enable Fault Brake0 and 1 interrupt** 1 = Enabling flags BKF0 and BKF1 can trigger PWM interrupt. 0 = Disabling flags BKF0 and BKF1 to trigger PWM interrupt.
[15:14]	**-**	**Reserved**
[13]	**PWMDIE5**	**PWM Channel 5 Duty Interrupt Enable** 1 = Enabled. 0 = Disabled.
[12]	**PWMDIE4**	**PWM Channel 4 Duty Interrupt Enable** 1 = Enabled. 0 = Disabled.
[11]	**PWMDIE3**	**PWM Channel 3 Duty Interrupt Enable** 1 = Enabled. 0 = Disabled.
[10]	**PWMDIE2**	**PWM Channel 2 Duty Interrupt Enable** 1 = Enabled. 0 = Disabled.

Bits	Description	
[9]	**PWMDIE1**	**PWM Channel 1 Duty Interrupt Enable** 1 = Enabled. 0 = Disabled.
[8]	**PWMDIE0**	**PWM Channel 0 Duty Interrupt Enable** 1 = Enabled. 0 = Disabled.
[7:6]	**-**	**Reserved**
[5]	**PWMPIE5**	**PWM Channel 5 Period Interrupt Enable** 1 = Enabled. 0 = Disabled.
[4]	**PWMPIE4**	**PWM Channel 4 Period Interrupt Enable** 1 = Enabled. 0 = Disabled.
[3]	**PWMPIE3**	**PWM Channel 3 Period Interrupt Enable** 1 = Enabled. 0 = Disabled.
[2]	**PWMPIE2**	**PWM Channel 2 Period Interrupt Enable** 1 = Enabled. 0 = Disabled.
[1]	**PWMPIE1**	**PWM Channel 1 Period Interrupt Enable** 1 = Enabled. 0 = Disabled.
[0]	**PWMPIE0**	**PWM Channel 0 Period Interrupt Enable** 1 = Enabled. 0 = Disabled.

PWM Interrupt Indication Register (PIIR)

Register	Offset	R/W	Description	Reset Value
PIIR	PWM_BA+0x58	R/W	PWM Interrupt Indication Register	0x0000_0000

31	30	29	28	27	26	25	24
-							
23	**22**	**21**	**20**	**19**	**18**	**17**	**16**
-						BKF1	BKF0
15	**14**	**13**	**12**	**11**	**10**	**9**	**8**
-		PWMDIF5	PWMDIF4	PWMDIF3	PWMDIF2	PWMDIF1	PWMDIF0
7	**6**	**5**	**4**	**3**	**2**	**1**	**0**
-		PWMPIF5	PWMPIF4	PWMPIF3	PWMPIF2	PWMPIF1	PWMPIF0

Bits	Description	
[31:18]	-	**Reserved**
[17]	**BKF1**	**PWM Brake1 Flag** 1 = When PWM Brake detects a falling signal at pin BKP1, this flag will be set to high. 0 = PWM Brake does not recognize a falling signal at BKP1. **Note:** This bit must be cleared by software by writing “1” to itself.
[16]	**BKF0**	**PWM Brake0 Flag** 1 = When PWM Brake detects a falling signal at pin BKP0, this flag will be set to high. 0 = PWM Brake does not recognize a falling signal at BKP0. **Note:** This bit must be cleared by software by writing “1” to itself.
[15:14]	-	**Reserved**
[13]	**PWMDIF5**	**PWM Channel 5 Duty Interrupt Flag** Flag is set by hardware when a channel 5 PWM counter reaches CMR5. Software can clear this bit by writing “1”to it.
[12]	**PWMDIF4**	**PWM Channel 4 Duty Interrupt Flag** Flag is set by hardware when a channel 4 PWM counter reaches CMR4. Software can clear this bit by writing “1” to it.
[11]	**PWMDIF3**	**PWM Channel 3 Duty Interrupt Flag** Flag is set by hardware when a channel 3 PWM counter reaches CMR3. Software can clear this bit by writing “1” to it.
[10]	**PWMDIF2**	**PWM Channel 2 Duty Interrupt Flag** Flag is set by hardware when a channel 2 PWM counter reaches CMR2. Software can clear this bit by writing “1” to it.

Bits	Description	
[9]	**PWMDIF1**	**PWM Channel 1 Duty Interrupt Flag** Flag is set by hardware when a channel 1 PWM counter reaches CMR1. Software can clear this bit by writing “1” to it.
[8]	**PWMDIF0**	**PWM Channel 0 Duty Interrupt Flag** Flag is set by hardware when a channel 0 PWM counter reaches CMR0. Software can clear this bit by writing “1” to it.
[7:6]	**-**	**Reserved**
[5]	**PWMPIF5**	**PWM Channel 5 Period Interrupt Flag** Flag is set by hardware when CNR5 down counter reaches zero. Software can clear this bit by writing “1” to it.
[4]	**PWMPIF4**	**PWM Channel 4 Period Interrupt Flag** Flag is set by hardware when CNR4 down counter reaches zero. Software can clear this bit by writing “1” to it.
[3]	**PWMPIF3**	**PWM Channel 3 Period Interrupt Flag** Flag is set by hardware when CNR3 down counter reaches zero. Software can clear this bit by writing “1” to it.
[2]	**PWMPIF2**	**PWM Channel 2 Period Interrupt Flag** Flag is set by hardware when CNR2 down counter reaches zero. Software can clear this bit by writing “1” to it.
[1]	**PWMPIF1**	**PWM Channel 1 Period Interrupt Flag** Flag is set by hardware when CNR1 down counter reaches zero. Software can clear this bit by writing “1” to it.
[0]	**PWMPIF0**	**PWM Channel 0 Period Interrupt Flag** Flag is set by hardware when CNR0 down counter reaches zero. Software can clear this bit by writing “1” to it.

Note: User can clear each interrupt flag by writing “1” to the corresponding bit in PIIR.

PWM Output Control Register (PWMPOE)

Register	Offset	R/W	Description	Reset Value
PWMPOE	PWM_BA+0x5C	R/W	PWM Output Control Register for Channel 0~5	0x0000_0000

31	30	29	28	27	26	25	24
-							
23	**22**	**21**	**20**	**19**	**18**	**17**	**16**
-							
15	**14**	**13**	**12**	**11**	**10**	**9**	**8**
-							
7	**6**	**5**	**4**	**3**	**2**	**1**	**0**
-		**PWM5**	**PWM4**	**PWM3**	**PWM2**	**PWM1**	**PWM0**

Bits	Description	
[31:6]	**-**	**Reserved**
[5]	**PWM5**	**PWM Channel 5 Output Enable Register** 1 = PWM channel 5 output to pin Enabled. 0 = PWM channel 5 output to pin Disabled. **Note:** The corresponding GPIO pin also must be switched to PWM function.
[4]	**PWM4**	**PWM Channel 4 Output Enable Register** 1 = PWM channel 4 output to pin Enabled. 0 = PWM channel 4 output to pin Disabled. **Note:** The corresponding GPIO pin also must be switched to PWM function.
[3]	**PWM3**	**PWM Channel 3 Output Enable Register** 1 = PWM channel 3 output to pin Enabled. 0 = PWM channel 3 output to pin Disabled. **Note:** The corresponding GPIO pin must also be switched to PWM function.
[2]	**PWM2**	**PWM Channel 2 Output Enable Register** 1 = PWM channel 2 output to pin Enabled. 0 = PWM channel 2 output to pin Disabled. **Note:** The corresponding GPIO pin must also be switched to PWM function.
[1]	**PWM1**	**PWM Channel 1 Output Enable Register** 1 = PWM channel 1 output to pin Enabled. 0 = PWM channel 1 output to pin Disabled. **Note:** The corresponding GPIO pin must also be switched to PWM function.

Bits	Description	
[0]	**PWM0**	**PWM Channel 0 Output Enable Register** 1 = PWM channel 0 output to pin Enabled. 0 = PWM channel 0 output to pin Disabled. **Note:** The corresponding GPIO pin must also be switched to PWM function.

PWM Fault Brake Control Register (PFBCON)

Register	Offset	R/W	Description	Reset Value
PFBCON	PWM_BA+0x60	R/W	PWM Fault Brake Control Register	0x0000_0000

31	30	29	28	27	26	25	24
-		PWMBKO5	PWMBKO4	PWMBKO3	PWMBKO2	PWMBKO1	PWMBKO0
23	**22**	**21**	**20**	**19**	**18**	**17**	**16**
-							
15	**14**	**13**	**12**	**11**	**10**	**9**	**8**
-							
7	**6**	**5**	**4**	**3**	**2**	**1**	**0**
BKF	-				CPO0BKEN	BKEN1	BKEN0

Bits	Description	
[31:30]	-	**Reserved**
[29]	**PWMBKO5**	**PWM Channel 5 Brake Output Select Register** 1 = PWM output high when fault brake conditions asserted. 0 = PWM output low when fault brake conditions asserted.
[28]	**PWMBKO4**	**PWM Channel 4 Brake Output Select Register** 1 = PWM output high when fault brake conditions asserted. 0 = PWM output low when fault brake conditions asserted.
[27]	**PWMBKO3**	**PWM Channel 3 Brake Output Select Register** 1 = PWM output high when fault brake conditions asserted. 0 = PWM output low when fault brake conditions asserted.
[26]	**PWMBKO2**	**PWM Channel 2 Brake Output Select Register** 1 = PWM output high when fault brake conditions asserted. 0 = PWM output low when fault brake conditions asserted.
[25]	**PWMBKO1**	**PWM Channel 1 Brake Output Select Register** 1 = PWM output high when fault brake conditions asserted. 0 = PWM output low when fault brake conditions asserted.
[24]	**PWMBKO0**	**PWM Channel 0 Brake Output Select Register** 1 = PWM output high when fault brake conditions asserted. 0 = PWM output low when fault brake conditions asserted.
[23:8]	-	**Reserved**

Bits	Description	
[7]	**BKF**	**PWM Fault Brake Event Flag (write "1" clear)** 1 = PWM output fault brake state when fault brake conditions asserted. 0 = PWM output initial state when fault brake conditions asserted.
[6:3]	**-**	**Reserved**
[2]	**CPO0BKEN**	**BKP1 Fault Brake Function Source Selection** 1 = CPO0 as one brake source in BKP1. 0 = EINT1 as one brake source in BKP1.
[1]	**BKEN1**	**Enable BKP1 Pin Trigger Fault Brake Function 1** 0 = Disabling BKP1 pin can trigger brake function 1 (EINT1 or CPO0). 1 = Enabling a falling at BKP1 pin can trigger brake function 1.
[0]	**BKEN0**	**Enable BKP0 Pin Trigger Fault Brake Function 0** 0 = Disabling BKP0 pin can trigger brake function 0 (EINT0) 1 = Enabling a falling at BKP0 pin can trigger brake function 0.

PWM Dead-Zone Interval Register (PDZIR)

Register	Offset	R/W	Description	Reset Value
PDZIR	PWM_BA+0x64	R/W	PWM Dead-zone Interval Register	0x0000_0000

31	30	29	28	27	26	25	24
-							
23	**22**	**21**	**20**	**19**	**18**	**17**	**16**
DZI45							
15	**14**	**13**	**12**	**11**	**10**	**9**	**8**
DZI23							
7	**6**	**5**	**4**	**3**	**2**	**1**	**0**
DZI01							

Bits	Description	
[31:24]	**-**	**Reserved**
[23:16]	**DZI45[7:0]**	**Dead-zone Interval Register for Pair of channel4 and channel5 (PWM4 and PWM5 pair).** These 8 bits determine the dead-zone length. The unit time of dead-zone length is received from corresponding CSR bits.
[15:8]	**DZI23[7:0]**	**Dead-zone Interval Register for Pair of channel2 and channel3 (PWM2 and PWM3 pair).** These 8 bits determine the dead-zone length. The unit time of dead-zone length is received from corresponding CSR bits.
[7:0]	**DZI01[7:0]**	**Dead-zone Interval Register for Pair of channel0 and channel1 (PWM0 and PWM1 pair).** These 8 bits determine the dead-zone length. The unit time of dead-zone length is received from corresponding CSR bits.

5.11 Serial Peripheral Interface (SPI) Controller

5.11.1 Overview

The Serial Peripheral Interface (SPI) is a synchronous serial data communication protocol which operates in full duplex mode. Devices communicate in Master/Slave mode with 4-wire bi-direction interface. NuMicro Mini51™ series contain one set of SPI controller performing a serial-to-parallel conversion on data received from a peripheral device, and a parallel-to-serial conversion on data transmitted to a peripheral device. SPI controller can be set as a master; it also can be set as a slave controlled by an off-chip master device.

5.11.2 Features

- Supports Master or Slave mode operation
- MSB or LSB first transfer
- Byte or word Suspend mode
- Variable output serial clock frequency in Master mode
- Supports two programmable serial clock frequencies in Master mode

5.11.3 SPI Block Diagram

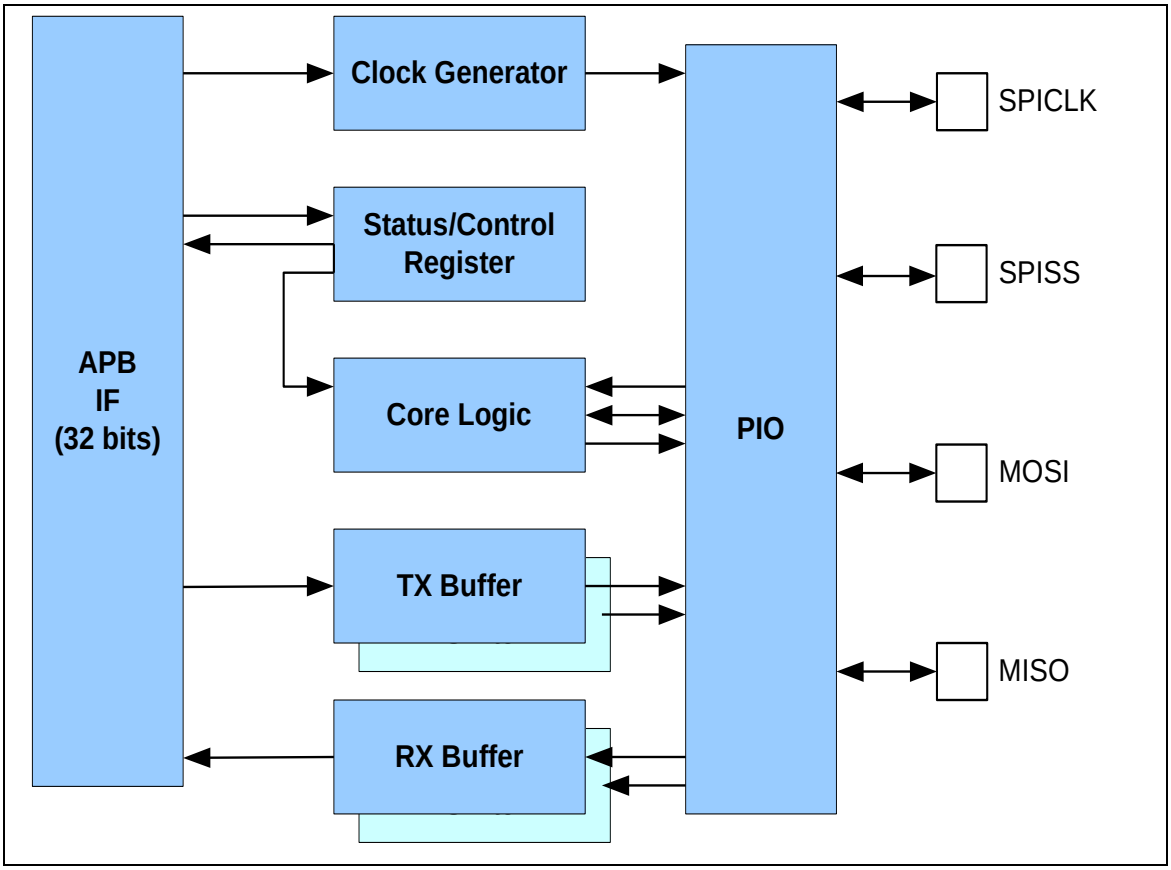

Figure 5.11-1 SPI Block Diagram

5.11.4 Functional Description

5.11.4.1 Master/Slave Mode

This SPI controller can be set as Master or Slave mode by setting the SLAVE bit (SPI_CNTRL[18]) to communicate with the off-chip SPI slave or master device. The application block diagrams in Master and Slave mode are shown in the following figures.

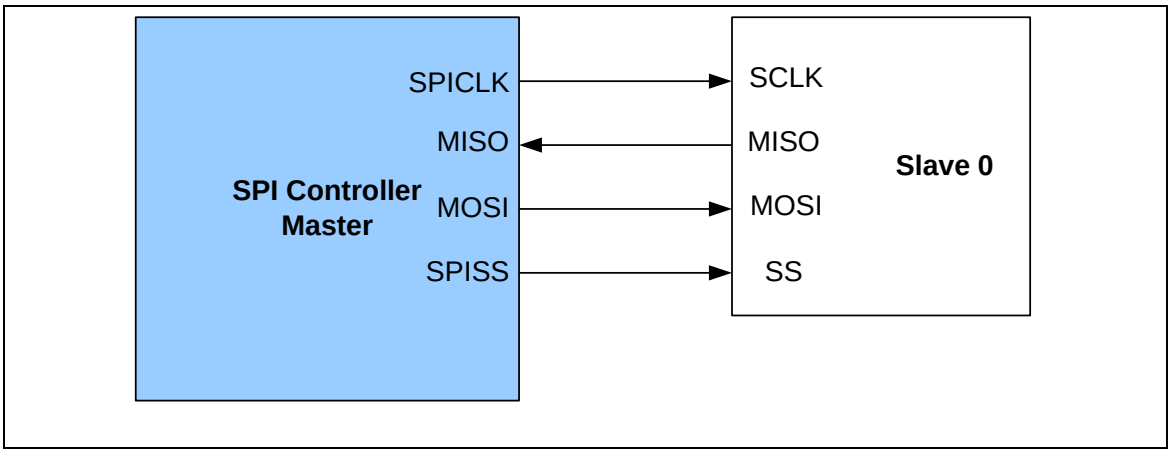

Figure 5.11-2 SPI Master Mode Application Block Diagram

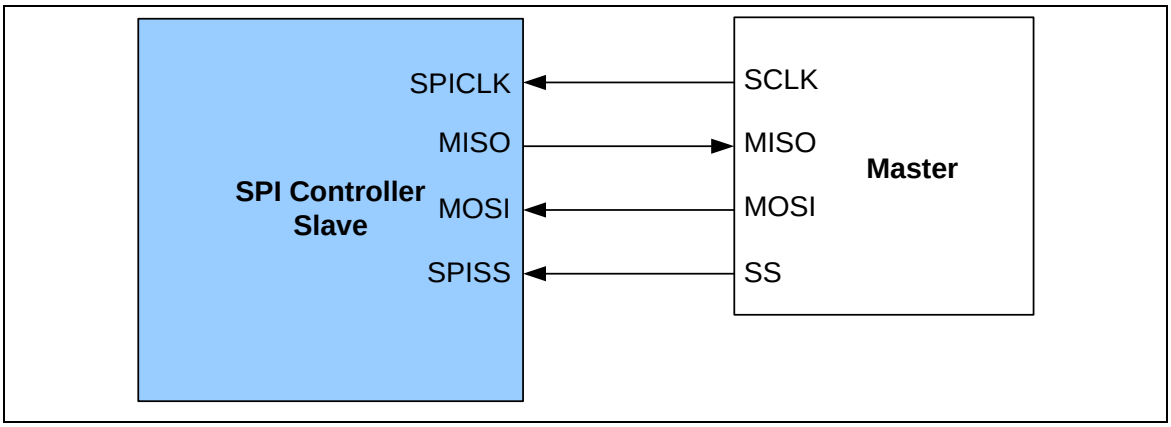

Figure 5.11-3 SPI Slave Mode Application Block Diagram

5.11.4.2 Slave Selection

In Master mode, this SPI controller can drive one off-chip slave device through the slave select output pin SPISS. In Slave mode, the off-chip master device drives the slave select signal from the SPISS input port to this SPI controller. In Master/Slave mode, the active level of slave selected signal can be programmed to low active or high active in SS_LVL bit (SPI_SSR[2]), and the SS_LTRIG bit (SPI_SSR[4]) define the slave select signal SPISS is level trigger or edge trigger. The selection of trigger condition depends on what type of peripheral slave/master device is connected.

5.11.4.3 Automatic Slave Selection

In Master mode, if the bit ASS (SPI_SSR[3]) is set, the slave select signal will be generated automatically and output to SPISS pin according to SSR (SPI_SSR[0]) whether enabled or not. It means that the slave select signal, which is enabled in SSR register is asserted by the SPI controller when transmit/receive is started by setting the GO_BUSY bit (SPI_CNTRL[0]) and is de-asserted after the data transfer is finished. If the ASS bit is cleared, the slave select output signal is asserted and de-asserted by manual setting and clearing the related bit in SPI_SSR[0] register. The active level of the slave select output signal is specified in SS_LVL bit (SPI_SSR[2]).

5.11.4.4 Serial Clock

In Master mode, writing a divisor into the DIVIDER (SPI_DIVIDER[15:0]) register to program the output frequency of serial clock to the SPICLK output port. It also supports the variable frequency function if the VARCLK_EN bit (SPI_CNTRL[23]) is enabled, in this case the each bit output frequency of serial clock can be programmed at one frequency of two different frequencies which depend on the DIVIDER and DIVIDER2 (SPI_DIVIDER[31:16]) settings. The decision of the variable frequency for each bit is defined in VARCLK (SPI_VARCLK[31:0]) register. In Slave mode, the off-chip master device drives the serial clock through the SPICLK input port to this SPI controller.

5.11.4.5 Clock Polarity

The CLKP bit (SPI_CNTRL[11]) defines the serial clock idle state in Master mode only. If CLKP = 1, the output SPICLK is idle at high state, otherwise it is at low state if CLKP = 0. For variable serial clock, it works in CLKP = 0 only.

5.11.4.6 Transmit/Receive Bit Length

The bit length of a transfer word is defined in TX_BIT_LEN bit field (SPI_CNTRL[7:3]). It can be set up to 32-bit length in a transfer word to transmit and receive.

5.11.4.7 Transmit/Receive Number

The transmit/receive number is defined in TX_NUM bit field (SPI_CNTRL[9:8]). But it can be set only as “00” or “01” to transmit/receive one or two transfer words.

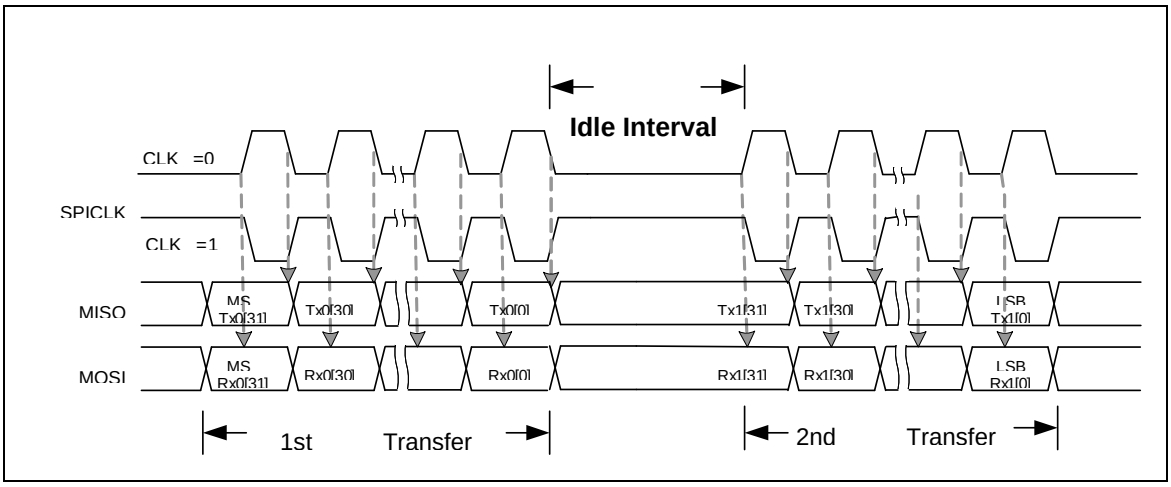

Figure 5.11-4 Two Transfer (Burst Mode) in One Transaction

5.11.4.8 LSB First

The LSB bit (SPI_CNTRL[10]) defines the data transmission either from LSB or from MSB to start to transmit/receive data.

5.11.4.9 Transmit Edge

The TX_NEG bit (SPI_CNTRL[2]) defines the data transmitted out either at negative edge or at positive edge of serial clock SPICLK.

5.11.4.10 Receive Edge

The RX_NEG bit (SPI_CNTRL[1]) defines the data received in either at negative edge or at positive edge of serial clock SPICLK.

5.11.4.11 Word Suspend

The four bits field of SP_CYCLE (SPI_CNTRL[15:12]) provide a configurable suspend interval 2 ~ 17 serial clock periods between two successive transfer words in Master mode. The suspend interval is from the last falling clock edge of the preceding transfer word to the first rising clock edge of the following transfer word if CLKP = 0. If CLKP = 1, the interval is from the rising clock edge of the preceding transfer word to the falling clock edge of the following transfer word. The default value of SP_CYCLE is “0” (2 serial clock cycles), but to set these bits field has no any effects on data transfer process if TX_NUM = “00”.

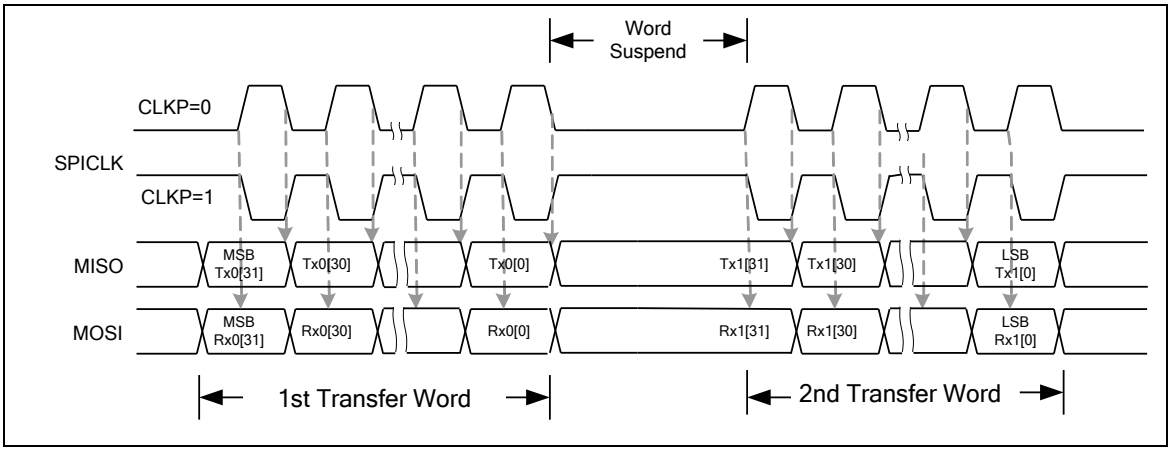

Figure 5.11-5 Word Suspend Mode

5.11.4.12 Byte Reorder

When the transfer is set as MSB first (LSB = 0) and the REORDER is enabled, the data stored in the TX buffer and RX buffer will be rearranged in the order as [BYTE0, BYTE1, BYTE2, BYTE3] in TX_BIT_LEN = 32-bit mode, and the sequence of transmitted/received data will be BYTE0, BYTE1, BYTE2, and then BYTE3. If the TX_BIT_LEN is set as 24-bit mode, the data in TX buffer and RX buffer will be rearranged as [unknown byte, BYTE0, BYTE1, BYTE2] and the BYTE0,

BYTE1, and BYTE2 will be transmitted/received data step by step in MSB first. The rule of 16-bit mode is the same as above.

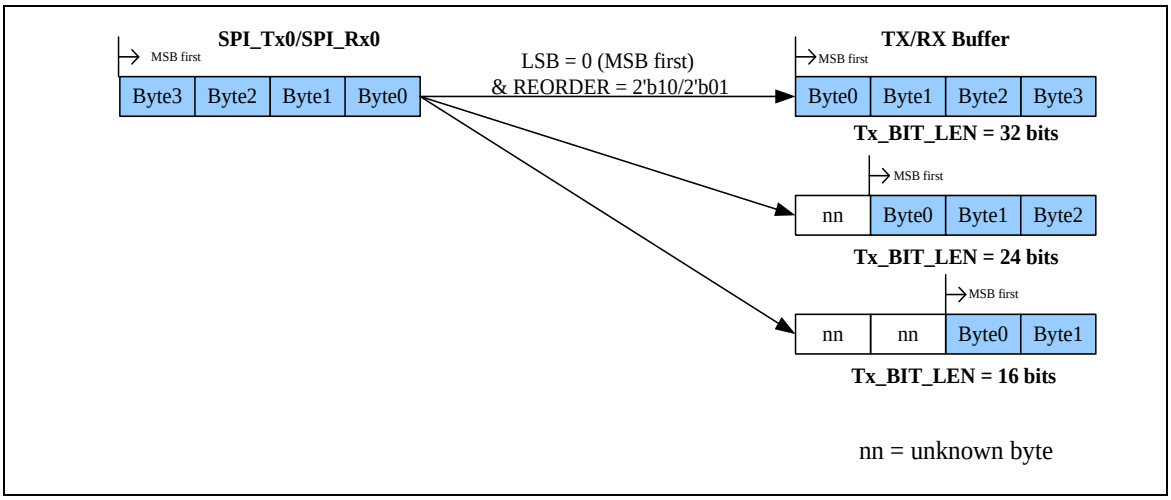

Figure 5.11-6 Byte Reorder

5.11.4.13 Byte Suspend

In Master mode, if SPI_CNTRL[19] is set to “1”, the hardware will insert a suspend interval 2 ~ 17 serial clock periods between two successive bytes in a transfer word. The byte suspend setting is the same as the word that using the common bit field of SP_CYCLE register. Note that when enable the byte suspend function, the setting of TX_BIT_LEN must be programmed as 0x00 only (32 bits per transfer word).

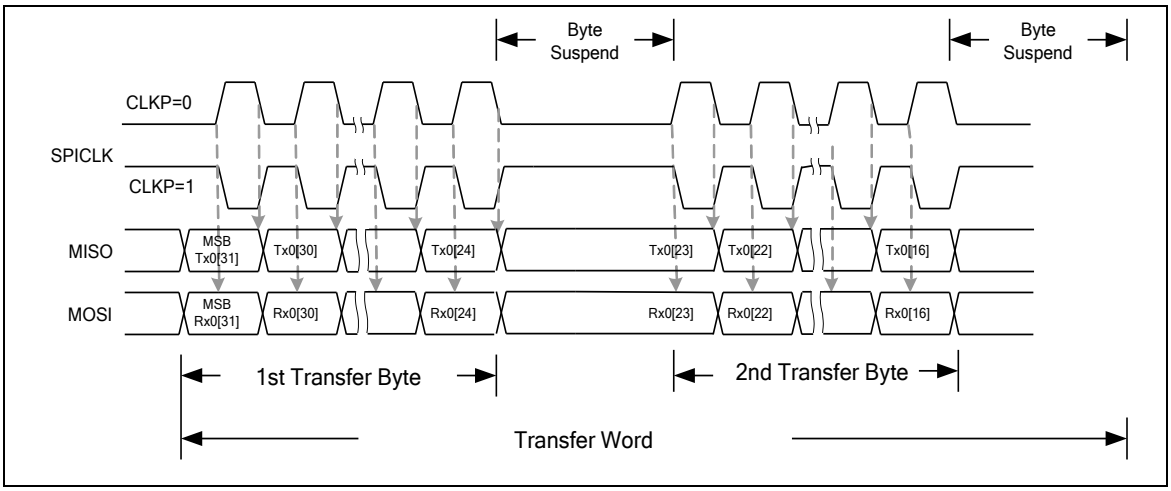

Figure 5.11-7 Byte Suspend Mode

Register	Description
00	No bytes reorder function and no clock idle interval among each byte.

01	Byte reorder function active. Insert a clock idle interval among each byte. The setting of TX_BIT_LEN must be configured as 0x00 (32 bits/ word).
10	Bytes reorder function active but no clock idle interval among each byte.
11	No bytes reorder function but insert a clock idle interval among each byte. The setting of TX_BIT_LEN must be configured as 0x00. (32 bits/ word).

Table 5.11-1 Byte Order and Byte Clock Idle Internal Conditions

5.11.4.14 Interrupt

Each SPI controller can generate an individual interrupt source when data transfer is finished and the respective interrupt event flag IF (SPI_CNTRL[16]) will be set. The interrupt event flag will generate an interrupt to CPU if the interrupt enable IE (SPI_CNTRL[17]) is set. The interrupt event flag IF can be cleared only by writing “1” to it.

5.11.4.15 Variable Serial Clock Frequency

In Master mode, the output of serial clock can be programmed as variable frequency pattern if the Variable Clock Enable bit VARCLK_EN (SPI_CNTRL[23]) is enabled. The frequency pattern format is defined in VARCLK (SPI_VARCLK[31:0]) register. If the bit content of VARCLK is ‘0’ the output frequency is in accordance with the DIVIDER (SPI_DIVIDER[15:0]) and if the bit content of VARCLK is “1”, the output frequency is in accordance with the DIVIDER2 (SPI_DIVIDER[31:16]). The following figure is the timing relationship among the serial clock (SPICLK), VARCLK, DIVIDER and DIVIDER2 registers. A two-bit combination in the VARCLK defines one clock cycle. The bit field VARCLK[31:30] defines the first clock cycle of SPICLK. The bit field VARCLK[29:28] defines the second clock cycle of SPICLK, and so on. The clock source selections are defined in VARCLK and it must be set to 1 cycle before the next clock option. For example, if there are 5 CLK1 cycles in SPICLK, the VARCLK shall set 9 ”0” in the MSB of VARCLK. The 10th shall be set as ”1" in order to switch the next clock source as CLK2. Note that when enabling the VARCLK_EN bit, the setting of TX_BIT_LEN must be programmed as 0x10 (16-bit mode only).

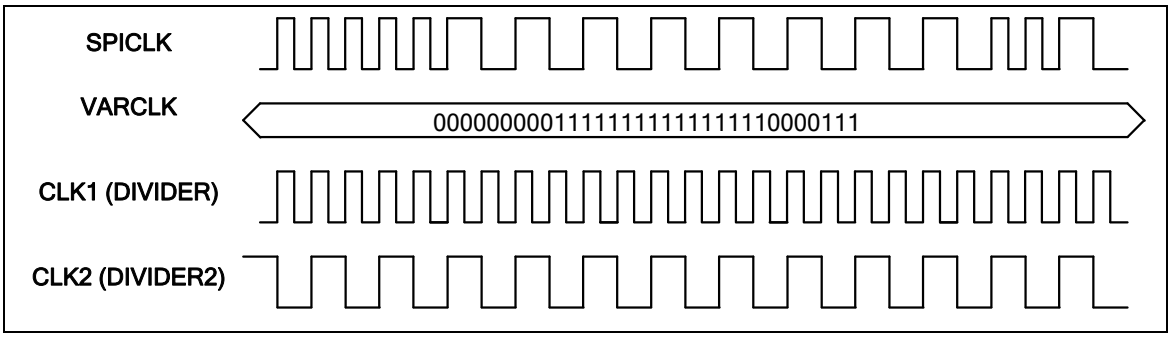

Figure 5.11-8 Variable Serial Clock Frequency

5.11.4.16 SPI Timing Diagram

In Master/Slave mode, the active level of device/slave select (SPISS) signal can be programmed to low active or high active in SS_LVL bit (SPI_SSR[2]), but the SPISS is level trigger or edge trigger which is defined in SS_LTRIG bit (SPI_SSR[4]). The serial clock (SPICLK) idle state can be configured as high state or low state by setting the CLKP bit (SPI_CNTRL[11]). It also provides the bit length of a transfer word in TX_BIT_LEN (SPI_CNTRL[7:3]), the transfer number in TX_NUM (SPI_CNTRL[9:8]), and transmit/receive data from MSB or LSB first in LSB bit (SPI_CNTRL[10]). User can also determine which edge of serial clock to transmit/receive data in TX_NEG/RX_NEG (SPI_CNTRL[2:1]) registers. Four SPI timing diagrams for master/slave operations and the related settings are shown below.

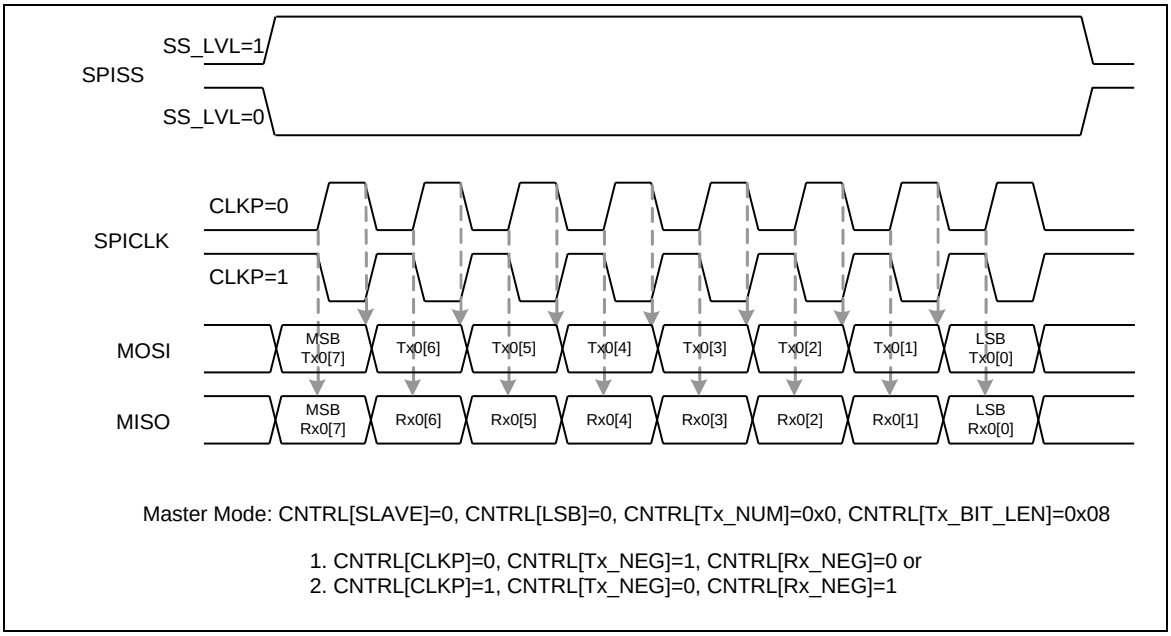

Figure 5.11-9 SPI Timing in Master Mode

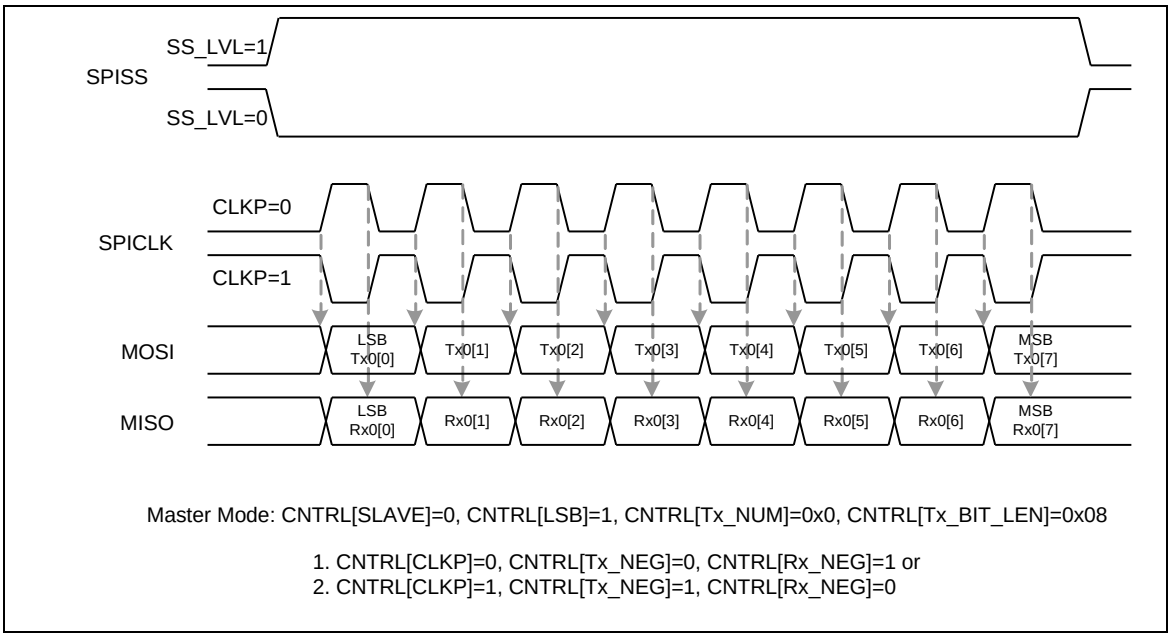

Figure 5.11-10 SPI Timing in Master Mode (Alternate Phase of SPICLK)

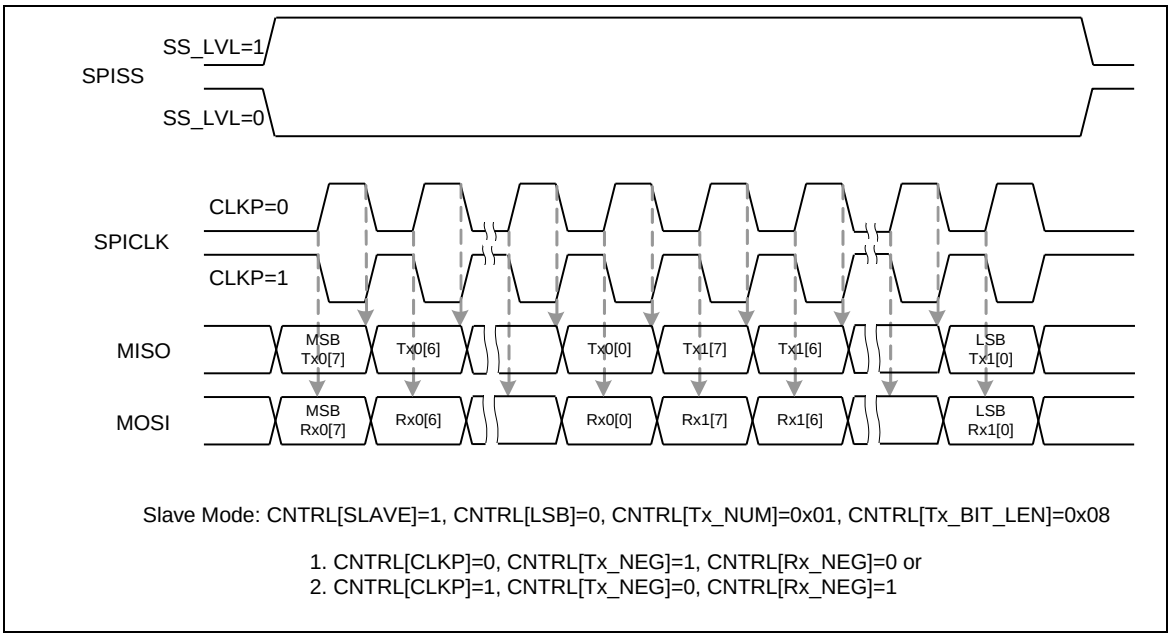

Figure 5.11-11 SPI Timing in Slave Mode

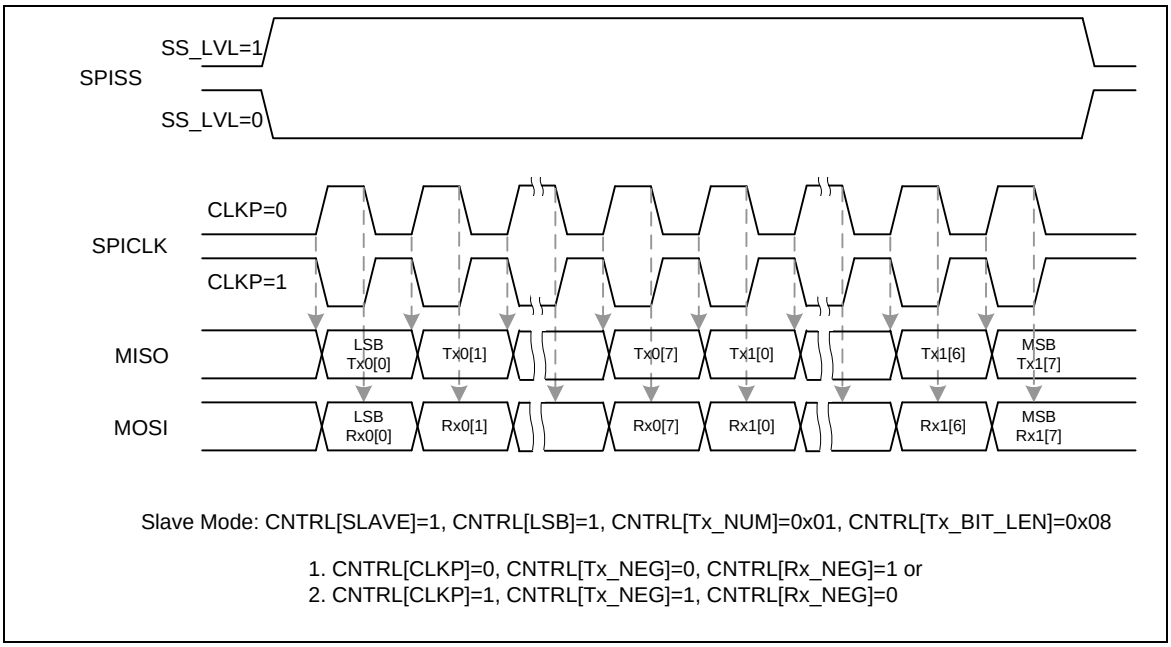

Figure 5.11-12 SPI Timing in Slave Mode (Alternate Phase of SPICLK)

5.11.4.17 SPI Programming Examples

Example 1: The SPI controller is set as a master to access an off-chip slave device with following specifications:

- Data bit is latched on positive edge of serial clock.
- Data bit is driven on negative edge of serial clock.
- Data bit is transferred from MSB first.
- SPICLK idles at low state.
- Only one byte data is transmitted/received in a transfer.
- Slave select signal is active low.

Basically, the specification of the connected off-chip slave device should be referred in detail before the following steps:

1) Write a divisor into the DIVIDER (SPI_DIVIDER[15:0]) register to determine the output frequency of serial clock.
2) Write the SPI_SSR register a proper value for the related settings of Master mode.
    1. Enable the Automatic Slave Select bit ASS (SPI_SSR[3] = 1).
    2. Select low level trigger output of slave select signal in the Slave Select Active Level bit SS_LVL (SPI_SSR[2] = 0).
    3. Select slave select signal to be output active at the I/O pin by setting the respective Slave Select Register bits SSR (SPI_SSR[0]) to active the off-chip slave devices.
3) Write the related settings into the SPI_CNTRL register to control the SPI master

actions.

1. Set this SPI controller as the master device in SLAVE bit (SPI_CNTRL[18] = 0).
2. Force the serial clock idle state at low in CLKP bit (SPI_CNTRL[11] = 0).
3. Select data transmitted at negative edge of serial clock in TX_NEG bit (SPI_CNTRL[2] = 1).
4. Select data latched at positive edge of serial clock in RX_NEG bit (SPI_CNTRL[1] = 0).
5. Set the bit length of word transfer as 8 bits in TX_BIT_LEN bit field (SPI_CNTRL[7:3] = 0x08).
6. Set word transfer in TX_NUM (SPI_CNTRL[9:8] = 0x0) only once.
7. Set MSB transfer first in LSB bit (SPI_CNTRL[10] = 0), and disregard the SP_CYCLE bit field (SPI_CNTRL[15:12]) due to it's not burst mode in this case.

4) If this SPI master will transmit (write) one byte data to the off-chip slave device, write the byte data that will be transmitted into the Tx0 (SPI_TX0[7:0]) register.

5) If this SPI master just only receives (reads) one byte data from the off-chip slave device, disregard what data will be transmitted and just write 0xFF into the SPI_TX0[7:0] register.

6) Enable the GO_BUSY bit (SPI_CNTRL[0] = 1) to start the data transfer at the SPI interface.

   ◆ Waiting for SPI interrupt occurred (if the Interrupt Enable IE bit is set) or just polling the GO_BUSY bit till it be cleared to "0" by hardware automatically.--

7) Read out the received one byte data from Rx0 (SPI_RX0[7:0]) register.

8) Go to 4) to continue with another data transfer or set SSR to "0" to inactivate the off-chip slave devices.

Example 2: The SPI controller is set as a slave device that is controlled by an off-chip master device, and supposes the off-chip master device to access the on-chip SPI slave controller through the SPI interface with the following specifications:

- Data bit is latched on positive edge of serial clock.
- Data bit is driven on negative edge of serial clock.
- Data bit is transferred from LSB first.
- SPICLK idles at high state.
- Only one byte data is transmitted/received in a transfer.
- Slave select signal is high level trigger.

Basically, the specification of the connected off-chip master device should be referred in detail before the following steps,

1) Write the SPI_SSR register a proper value for the related settings of Slave mode.

   Select high level and level trigger for the input of slave select signal by setting the Slave Select Active Level bit SS_LVL (SPI_SSR[2] = 1) and the Slave Select Level Trigger bit SS_LTRIG (SPI_SSR[4] = 1).

2) Write the related settings into the SPI_CNTRL register to control this SPI slave actions.
   1. Set this SPI controller as slave device in SLAVE bit (SPI_CNTRL[18] = 1).
   2. Select the serial clock idle state at high in CLKP bit (SPI_CNTRL[11] = 1).
   3. Select data transmitted at negative edge of serial clock in TX_NEG bit (SPI_CNTRL[2] = 1).
   4. Select data latched at positive edge of serial clock in RX_NEG bit (SPI_CNTRL[1] = 0).
   5. Set the bit length of word transfer as 8 bits in TX_BIT_LEN bit field (SPI_CNTRL[7:3] = 0x08).
   6. Set only one time of word transfer in TX_NUM (SPI_CNTRL[9:8] = 0x0).
   7. Set LSB transfer first in LSB bit (SPI_CNTRL[10] = 1), and disregard the SP_CYCLE bit field (SPI_CNTRL[15:12]) due to it's not burst mode in this case.
3) If this SPI slave will transmit (be read) one byte data to the off-chip master device, write the byte data that will be transmitted into the Tx0 (SPI_TX0[7:0]) register.
4) If this SPI slave just only receives (be written) one byte data from the off-chip master device, disregard what data will be transmitted and just write 0xFF into the SPI_TX0[7:0] register.
5) Enable the GO_BUSY bit (SPI_CNTRL[0] = 1) to wait for the slave select trigger input and serial clock input from the off-chip master device to start the data transfer at the SPI interface.

   Waiting for SPI interrupt to occur (if the Interrupt Enable IE bit is set) or just polling the GO_BUSY bit until it is cleared to "0" by hardware automatically.
6) Read out the received one byte data from Rx (SPI_RX0[7:0]) register.
7) Go to 3) to continue with another data transfer or disable the GO_BUSY bit to stop data transfer.

5.11.5 SPI Serial Interface Control Register Map

R: read only, **W:** write only, **R/W:** both read and write

Register	Offset	R/W	Description	Reset Value
SPI_BA = 0x4003_4000				
SPI_CNTRL	SPI_BA+0x00	R/W	Control and Status Register	0x0000_0004
SPI_DIVIDER	SPI_BA+0x04	R/W	Clock Divider Register	0x0000_0000
SPI_SSR	SPI_BA+0x08	R/W	Slave Select Register	0x0000_0000
SPI_RX0	SPI_BA+0x10	R	Data Receive Register 0	0x0000_0000
SPI_RX1	SPI_BA+0x14	R	Data Receive Register 1	0x0000_0000
SPI_TX0	SPI_BA+0x20	W	Data Transmit Register 0	0x0000_0000
SPI_TX1	SPI_BA+0x24	W	Data Transmit Register 1	0x0000_0000
SPI_VARCLK	SPI_BA+0x34	R/W	Variable Clock Pattern Register	0x007F_FF87
SPI_CNTRL2	SPI_BA+0x3C	R/W	Control and Status Register 2	0x0000_0000

Note: When software programs SPI_CNTRL, the GO_BUSY bit should be written last.

5.11.6 Register Description

SPI Control and Status Register (SPI_CNTRL)

Register	Offset	R/W	Description	Reset Value
SPI_CNTRL	SPI_BA+0x00	R/W	Control and Status Register	0x0000_0004

31	30	29	28	27	26	25	24
-							
23	**22**	**21**	**20**	**19**	**18**	**17**	**16**
VARCLK_EN	-		**REORDER**		**SLAVE**	**IE**	**IF**
15	**14**	**13**	**12**	**11**	**10**	**9**	**8**
SP_CYCLE				**CLKP**	**LSB**	**TX_NUM**	
7	**6**	**5**	**4**	**3**	**2**	**1**	**0**
TX_BIT_LEN					**TX_NEG**	**RX_NEG**	**GO_BUSY**

Bits	Description	
[31:24]	-	**Reserved**
[23]	**VARCLK_EN**	**Variable Clock Enable (Master Only)** 1 = The serial clock output frequency is variable. The output frequency is decided by the value of VARCLK, DIVIDER, and DIVIDER2. 0 = The serial clock output frequency is fixed and decided only by the value of DIVIDER. **Note:** When enabling this VARCLK_EN bit, the setting of TX_BIT_LEN must be programmed as 0x10 (16-bit mode).
[22:21]	-	**Reserved**
[20:19]	**REORDER[1:0]**	**Reorder Mode Selection** REORDER: Description 00: Disable both Byte Reorder and byte suspend functions 01: Enable Byte Reorder function and insert a byte suspend interval (2~17 SPICLK cycles) among each byte. The setting of TX_BIT_LEN must be configured as “00” (32-bit/word). 10: Enable Byte Reorder function, but disable byte suspend function. 11: Disable Byte Reorder function, but insert a suspend interval (2~17 SPICLK cycles) among each byte. The setting of TX_BIT_LEN must be configured as “00” (32-bit/word).
[18]	**SLAVE**	**Slave Mode Indication**

Bits	Description	
		1 = Slave mode. 0 = Master mode.
[17]	**IE**	**Interrupt Enable** 1 = SPI Interrupt Enabled. 0 = SPI Interrupt Disabled.
[16]	**IF**	**Interrupt Flag** 1 = The transfer done. The interrupt flag is set if it was enabled. 0 =The transfer does not finish yet. **Note:** This bit is cleared by writing "1" to itself.
[15:12]	**SP_CYCLE[3:0]**	**Suspend Interval (Master Only)** The four bits provide configurable suspend interval between two successive transmit/receive transaction in a transfer. The suspend interval is from the last falling clock edge of the current transaction to the first rising clock edge of the successive transaction if CLKP = 0. If CLKP = 1, the interval is from the rising clock edge to the falling clock edge. The default value is "0". When TX_NUM = 00, setting this field has no effect on transfer. The desired suspend interval is obtained according to the following equation: (SP_CYCLE[3:0] + 2) * period of SPICLK

SP_CYCLE Value	The suspend Interval
0000	2 SPICLK clock cycle
0001	3 SPICLK clock cycle
------	----------
1110	16 SPICLK clock cycle
1111	17 SPICLK clock cycle

[11]	**CLKP**	**Clock Polarity** 1 = SPICLK idle high. 0 = SPICLK idle low.
[10]	**LSB**	**LSB First** 1 = The LSB sent first on the line (bit 0 of SPI_TX0/1), and the first bit received from the line will be put in the LSB position in the Rx register (bit 0 of SPI_RX0/1). 0 = The MSB transmitted/received first (which bit in SPI_TX0/1 and SPI_RX0/1 register depends on the TX_BIT_LEN field).
[9:8]	**TX_NUM[1:0]**	**Transmit/Receive Word Numbers** This field specifies how many transmit/receive word numbers should be executed in one transfer.

TX_NUM	Description
00	Only one transmit/receive transaction will be executed in one transfer.
01	Two successive transmit/receive transactions will be executed in one transfer (burst mode).
10	Reserved

Bits	Description	
		11 — Reserved **Note:** In Slave mode with level-trigger configuration, the slave select pin must be kept at active state during the successive data transfer.
[7:3]	**TX_BIT_LEN [4:0]**	**Transmit Bit Length** This field specifies how many bits are transmitted in one transmit/receive. Up to 32 bits can be transmitted. TX_BIT_LEN — Description 00001 — 1 bit is transmitted in one transaction 00010 — 2 bits are transmitted in one transaction 00011 — 3 bits are transmitted in one transaction ------ — ---------- 11111 — 31 bits are transmitted in one transaction 00000 — 32 bits are transmitted in one transaction
[2]	**TX_NEG**	**Transmit At Negative Edge** 1 = The transmitted data output signal changed at the falling edge of SPICLK. 0 = The transmitted data output signal changed at the rising edge of SPICLK.
[1]	**RX_NEG**	**Receive At Negative Edge** 1 = The received data input signal latched at the falling edge of SPICLK. 0 = The received data input signal latched at the rising edge of SPICLK.
[0]	**GO_BUSY**	**Go and Busy Status** 1= In Master mode, writing “1” to this bit to start the SPI data transfer; in Slave mode, writing “1” to this bit indicates that the slave is ready to communicate with a master. During the data transfer, this bit keeps the value of “1”. As the transfer is finished, this bit will be cleared automatically. 0 = Data transfer stopped if SPI is transferring. **Note:** All registers should be set before writing “1” to the GO_BUSY bit.

SPI Divider Register (SPI_DIVIDER)

Register	Offset	R/W	Description	Reset Value
SPI_DIVIDER	SPI_BA+0x04	R/W	Clock Divider Register (Master Only)	0x0000_0000

31	30	29	28	27	26	25	24
DIVIDER2							
23	**22**	**21**	**20**	**19**	**18**	**17**	**16**
DIVIDER2							
15	**14**	**13**	**12**	**11**	**10**	**9**	**8**
DIVIDER							
7	**6**	**5**	**4**	**3**	**2**	**1**	**0**
DIVIDER							

Bits	Description	
[31:16]	**DIVIDER2[15:0]**	**Clock Divider 2 Register (Master Only)** The value in this field is the 2nd frequency divider of the system clock, PCLK, to generate the serial clock on the output SPICLK. The desired frequency is obtained according to the following equation: $f_{sclk} = \frac{f_{psclk}}{(DIVIDER2+1)*2}$
[15:0]	**DIVIDER[15:0]**	**Clock Divider Register (Master Only)** The value in this field is the frequency divider of the system clock, PCLK, to generate the serial clock on the output SPICLK. The desired frequency is obtained according to the following equation: $f_{sclk} = \frac{f_{psclk}}{(DIVIDER+1)*2}$ In Slave mode, the period of SPI clock driven by a master shall equal or over 5 times the period of PCLK. In other words, the maximum frequency of SPI clock is the fifth of the frequency of slave's PCLK.

SPI Slave Select Register (SPI_SSR)

Register	Offset	R/W	Description	Reset Value
SPI_SSR	SPI_BA+0x08	R/W	Slave Select Register	0x0000_0000

31	30	29	28	27	26	25	24
-							
23	**22**	**21**	**20**	**19**	**18**	**17**	**16**
-							
15	**14**	**13**	**12**	**11**	**10**	**9**	**8**
-							
7	**6**	**5**	**4**	**3**	**2**	**1**	**0**
-		LTRIG_FLAG	SS_LTRIG	ASS	SS_LVL	-	SSR

Bits	Description	
[31:6]	-	**Reserved**
[5]	**LTRIG_FLAG**	**Level Trigger Flag** When the SS_LTRIG bit is set in Slave mode, this bit can be read to indicate whether the received bit number meets the requirement or not. 1 = The transaction number and the transferred bit length met the specified requirements which defined in TX_NUM and TX_BIT_LEN. 0 = The transaction number or the transferred bit length of one transaction doesn't meet the specified requirements. **Note**: This bit is READ only.
[4]	**SS_LTRIG**	**Slave Select Level Trigger (Slave Only)** 1 = The slave select signal will be level-trigger. It depends on SS_LVL to decide the signal is active low or active high. 0 = The input slave select signal is edge-trigger. This is the default value.
[3]	**ASS**	**Automatic Slave Selection (Master Only)** 1 = If this bit is set, SPISS signals are generated automatically. It means that device/slave select signal, which is set in SSR register is asserted by the SPI controller when transmit/receive is started by setting GO_BUSY, and is de-asserted after each transmit/receive is finished. 0 = If this bit is cleared, slave select signals are asserted and de-asserted by setting and clearing related bits in SSR register.
[2]	**SS_LVL**	**Slave Select Active Level** It defines the active level of device/slave select signal (SPISS). 1 = The slave select signal SPISS active at high-level/rising-edge. 0 = The slave select signal SPISS active at low-level/falling-edge.
[1]	-	**Reserved**

Bits	Description	
[0]	**SSR**	**Slave Select Register (Master Only)** If ASS bit is cleared, writing "1" to any bit location of this field will set the proper SPISS line to an active state and writing "0" will set the line back to inactive state. If ASS bit is set, writing "1" to any bit location of this field will select appropriate SPISS line to be automatically driven to active state for the duration of the transmit/receive, and will be driven to inactive state for the rest of the time. (The active level of SPISS is specified in SS_LVL). **Note:** SPISS is always defined as device/slave select input signal in Slave mode.

SPI Data Receive Register (SPI_RX)

Register	Offset	R/W	Description	Reset Value
SPI_RX0	SPI_BA+0x10	R	Data Receive Register 0	0x0000_0000
SPI_RX1	SPI_BA+0x14	R	Data Receive Register 1	0x0000_0000

31	30	29	28	27	26	25	24
RX							
23	**22**	**21**	**20**	**19**	**18**	**17**	**16**
RX							
15	**14**	**13**	**12**	**11**	**10**	**9**	**8**
RX							
7	**6**	**5**	**4**	**3**	**2**	**1**	**0**
RX							

Bits	Description	
[31:0]	**RX[31:0]**	**Data Receive Register** The Data Receive Registers hold the value of received data of the last executed transfer. Valid bits depend on the transmit bit length field in the SPI_CNTRL register. For example, if TX_BIT_LEN is set to 0x08 and TX_NUM is set to “0”, bit Rx0[7:0] holds the received data. **Note:** The Data Receive Registers are read only registers.

SPI Data Transmit Register (SPI_TX)

Register	Offset	R/W	Description	Reset Value
SPI_TX0	SPI_BA+0x20	W	Data Transmit Register 0	0x0000_0000
SPI_TX1	SPI_BA+0x24	W	Data Transmit Register 1	0x0000_0000

31	30	29	28	27	26	25	24
TX							
23	**22**	**21**	**20**	**19**	**18**	**17**	**16**
TX							
15	**14**	**13**	**12**	**11**	**10**	**9**	**8**
TX							
7	**6**	**5**	**4**	**3**	**2**	**1**	**0**
TX							

Bits	Description	
[31:0]	**TX[31:0]**	**Data Transmit Register** The Data Transmit Registers hold the data to be transmitted in the next transfer. Valid bits depend on the transmit bit length field in the CNTRL register. For example, if TX_BIT_LEN is set to 0x08 and the TX_NUM is set to “0”, the bit TX0[7:0] will be transmitted in next transfer. If TX_BIT_LEN is set to 0x00 and TX_NUM is set to “1”, the core will perform two 32-bit transmit/receive successive using the same setting (the order is TX0[31:0], TX1[31:0]).

SPI Variable Clock Register (SPI_VARCLK)

Register	Offset	R/W	Description	Reset Value
SPI_VARCLK	SPI_BA+0x34	R/W	Variable Clock Pattern Register	0x007F_FF87

31	30	29	28	27	26	25	24
VARCLK							
23	**22**	**21**	**20**	**19**	**18**	**17**	**16**
VARCLK							
15	**14**	**13**	**12**	**11**	**10**	**9**	**8**
VARCLK							
7	**6**	**5**	**4**	**3**	**2**	**1**	**0**
VARCLK							

Bits	Description	
[31:0]	**VARCLK[31:0]**	**Variable clock Pattern** The value in this field is the frequency pattern of the SPI clock. If the bit pattern of VARCLK is “0”, the output frequency of SPICLK is in accordance with the value of DIVIDER. If the bit patterns of VARCLK are “1”, the output frequency of SPICLK is in accordance with the value of DIVIER2. Refer to the register SPI_DIVIER. Refer to Figure 5.11-8 **Note**: It is used for CLKP = “0” only.

SPI Control and Status Register 2 (SPI_CNTRL2)

Register	Offset	R/W	Description	Reset Value
SPI_CNTRL	SPI_BA+0x3C	R/W	Control and Status Register 2	0x0000_0000

31	30	29	28	27	26	25	24
-							
23	**22**	**21**	**20**	**19**	**18**	**17**	**16**
-							
15	**14**	**13**	**12**	**11**	**10**	**9**	**8**
-				**SLV_START_INTSTS**	**SSTA_INTEN**	**SLV_ABORT**	**NOSLVSEL**
7	**6**	**5**	**4**	**3**	**2**	**1**	**0**
-							**DIV_ONE**

Bits	Description	
[31:12]	**-**	**Reserved**
[11]	**SLV_START_INTSTS**	**Slave Start Interrupt Status** It is used to indicate that the transfer has started in Slave mode with no slave selected. 1 = It indicates that the transfer starts in Slave mode with no slave select. It is auto clear by transfer done or writing “1” clear. 0 = It indicates that the slave starts transfer no active.
[10]	**SSTA_INTEN**	**Slave Start Interrupt Enable** It is used to enable interrupt when the transfer has started in Slave mode with no slave select. If there is no transfer done interrupt over the time period which is defined by user after the transfer start, the user can set the SLV_ABORT bit to force the transfer done. 1 = Enable the transaction start interrupt. It is clear by the current transfer done or the SLV_START_INTSTS bit be clear (write “1” clear). 0 = Disable the transfer start interrupt.
[9]	**SLV_ABORT**	**Abort in Slave Mode with No Slave Selected** In normal operation, there is interrupt event when the received data meet the required bits defined in TX_BIT_LEN and TX_NUM. If the received bits are less than the requirement and there is no more serial clock input over the one transfer time in Slave mode with no slave select, user can set this bit to force the current transfer done and then get a transfer done interrupt event. **Note**: It is auto clear to “0” by hardware when the abort event is active.
[8]	**NOSLVSEL**	**No Slave Selected in Slave Mode** This is used to ignore the slave select signal in Slave mode. The SPI controller can work on 3-wire interface including SPICLK, SPI_MISO, and SPI_MOSI when it is set as a slave device. 1 = The controller is 3-wire bi-direction interface in Slave mode. When this bit is set

Bits	Description	
		as "1", the controller start to transmit/receive data after the GO_BUSY bit active and the serial clock input. 0 = The controller is 4-wire bi-direction interface. **Note:** In no slave select signal mode, the SS_LTRIG, SPI_SSR[4] shall be set as "1".
[7:1]	**-**	**Reserved**
[0]	**DIV_ONE**	**Clock Divider Fixed Divide one Register** The register is used to set the frequency divider as one of the system clock, PCLK, to generate the serial clock on the output SPICLK. 1 = Clock divide value fixed as "1" 0 = Clock divide value based on the DIVIDER and DIVIDER2 registers.

5.12 Timer Controller

5.12.1 Overview

The timer module includes two channels, TIMER0~TIMER1, which allow user to easily implement a timer control for applications. The timer can perform functions like frequency measurement, interval measurement, clock generation, delay timing, and so on. The timer can generate an interrupt signal upon time-out, or provide the current value of count during operation.

5.12.2 Features

- Two sets of 32-bit timers with 24-bit up-timer and one 8-bit pre-scale counter
- Independent clock source for each channel (TMR0_CLK, TMR1_CLK)
- Provides one-shot, periodic, toggle and continuous counting operation modes
- Time-out period = (period of timer clock input) * (8-bit pre-scale counter + 1) * (24-bit TCMP)
- Maximum counting cycle time = (1 / T MHz) * (2^8) * (2^{24}); T is the period of timer clock
- Internal 24-bit up timer is readable through TDR (Timer Data Register)
- Supports event counting function to count the event from external pin
- Supports input capture function to capture or reset counter value

5.12.3 Block Diagram

Each channel is equipped with an 8-bit pre-scale counter, a 24-bit up-timer, a 24-bit compare register and an interrupt request signal. Refer to Figure 5.12-1. There are five options of clock sources for each channel. Figure 5.12-2 illustrates the clock source control function.

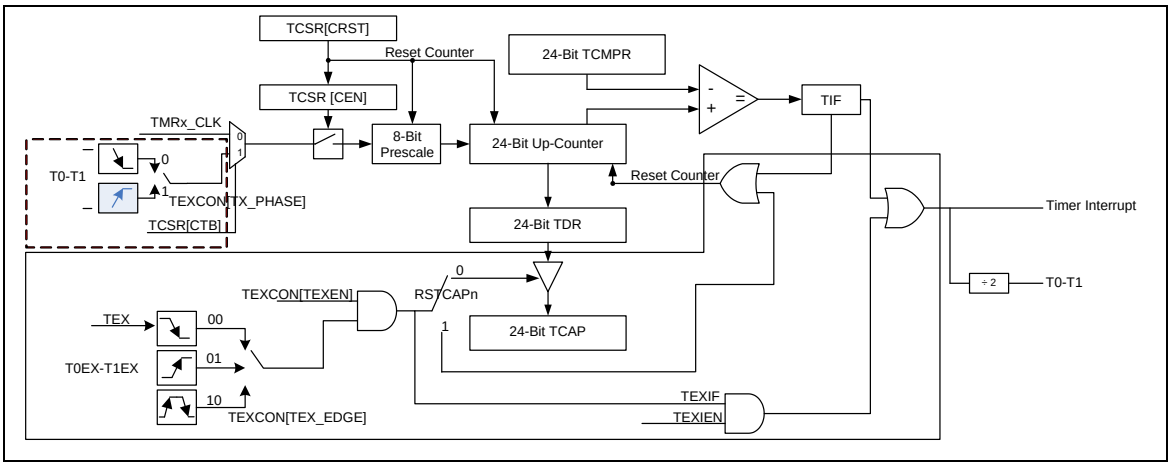

Figure 5.12-1 Timer Controller Block Diagram

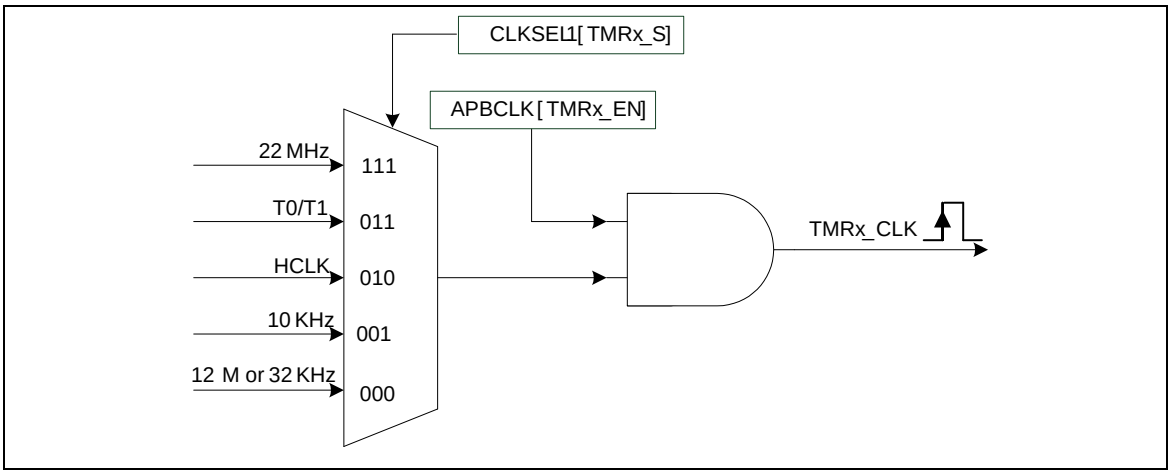

Figure 5.12-2 Clock Source of Timer Controller

5.12.4 Functional Description

A Timer controller provides one-shot, periodic, toggle and continuous counting operation modes. It also provides the event counting function to count the event from the external pin and input capture function to capture or reset timer counter value. Each operating function mode is shown as follows:

5.12.4.1 One-Shot Mode

If the timer is operated at one-shot mode and CEN (TCSR[30] timer enable bit) is set to “1”, the timer counter starts up counting. Once the timer counter value reaches timer compare register (TCMPR) value, if IE (TCSR[29] interrupt enable bit) is set to “1”, then the timer interrupt flag is set and the interrupt signal is generated and sent to NVIC to inform CPU. It indicates that the timer counting overflow happens. If IE is set to “0”, no interrupt signal is generated. In this operation mode, once the timer counter value reaches timer compare register (TCMPR) value, the timer counter value goes back to counting initial value and CEN is cleared to “0” by timer controller. Timer counting operation stops, once the timer counter value reaches timer compare register (TCMPR) value. That is to say, timer operates timer counting and compares with TCMPR value function only one time after programming the timer compare register (TCMPR) value and CEN is set to “1”. So, this operation mode is called One-Shot mode.

5.12.4.2 Periodic Mode

If the timer is operated at period mode and CEN is set to “1”, the timer counter starts up counting. Once the timer counter value reaches timer compare register (TCMPR) value, if IE is set to “1”, then the timer interrupt flag is set and the interrupt signal is generated and sent to NVIC to inform CPU. It indicates that the timer counting overflow happens. If IE is set to “0”, no interrupt signal is generated. In this operation mode, once the timer counter value reaches timer compare register (TCMPR) value, the timer counter value goes back to counting initial value and CEN is kept at “1” (counting enable continuously). The timer counter operates up counting again. If the interrupt flag is cleared by software, once the timer counter value reaches timer compare register (TCMPR) value and IE is set to “1”, then the timer interrupt flag is set and the interrupt signal is generated and sent to NVIC to inform CPU again. That is to say, timer operates timer counting and compares with TCMPR value function periodically. The timer counting operation doesn’t stop until the CEN is set to “0”. The interrupt signal is also generated periodically. So, this operation mode is called Periodic mode.

5.12.4.3 Toggle Mode

If the timer is operated at toggle mode and CEN is set to “1”, the timer counter starts up counting. Once the timer counter value reaches timer compare register (TCMPR) value, if IE is set to “1”, then the timer interrupt flag is set and the interrupt signal is generated and sent to NVIC to inform CPU. It indicates that the timer counting overflow happens. The associated toggle output (tout) signal is set to “1”. In this operation mode, once the timer counter value reaches timer compare register (TCMPR) value, the timer counter value goes back to counting initial value and CEN is kept at “1” (counting enable continuously). The timer counter operates up counting again. If the interrupt flag is cleared by software, once the timer counter value reaches timer compare register (TCMPR) value and IE is set to “1”, then the timer interrupt flag is set and the interrupt signal is generated and sent to NVIC to inform CPU again. The associated toggle output (tout) signal is set to “0”. The timer counting operation doesn’t stop until the CEN is set to “0”. Thus, the toggle output (tout) signal is changing back and force with 50% duty cycle. So, this operation mode is called Toggle mode.

5.12.4.4 Continuous Counting Mode

If the timer is operated at continuous counting mode and CEN is set to “1”, the associated interrupt

signal is generated depending on TDR = TCMPR if IE is enabled. User can change different TCMPR value immediately without disabling timer counting and restarting timer counting. For example, TCMPR is set as 80, first. (The TCMPR should be less than 2^{24} -1 and be greater than 1). The timer generates the interrupt if IE is enabled and TIF (timer interrupt flag) will set to "1" then the interrupt signal is generated and sent to NVIC to inform CPU when TDR value is equal to 80 and. But the CEN is kept at "1" (counting enable continuously) and TDR value will not go back to "0", It continues to count 81, 82, 83, … to 2^{24} -1, 0, 1, 2, 3, … to 2^{24} -1 again and again. Next, if user programs TCMPR as 200 and the TIF is cleared to "0", then timer interrupt occurred and TIF is set to "1", then the interrupt signal is generated and sent to NVIC to inform CPU again when TDR value reaches to 200. At last, user programs TCMPR as 500 and clears TIF to "0" again, then timer interrupt occurred and TIF sets to "1" then the interrupt signal is generated and sent to NVIC to inform CPU when TDR value reaches to 500. From application view, the interrupt is generated depending on TCMPR. In this mode, the timer counting is continuous. Thus, this operation mode is called as continuous counting mode.

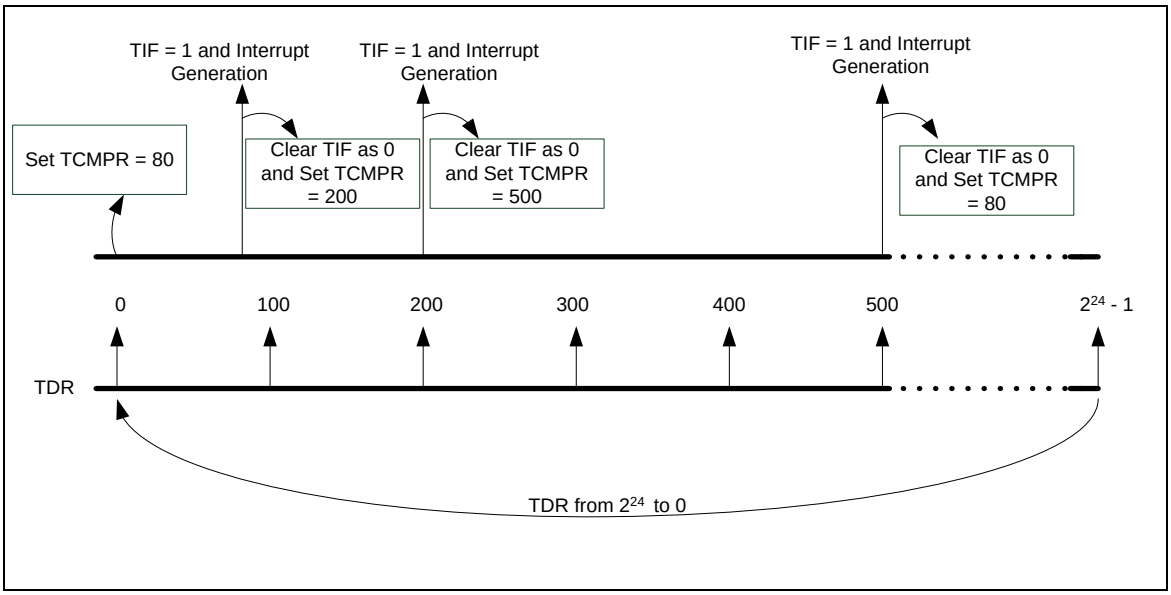

Figure 5.12-3 Continuous Counting Mode

5.12.4.5 Event Counting Function

The event counting mode can count the event from T0~T1 pins. In event counting mode, the clock source of timer controller, TMRx_CLK, as shown in Figure 5.12-2, should be set as HCLK. Also, the event count source operating frequency should be less than 1/3 HCLK frequency if counting de-bounce is disabled or there's less than 1/8 HCLK frequency if counting de-bounce is enabled. Otherwise, the returned TDR value is incorrect. It provides T0~T1 enabled or disabled de-bounce function by TEXCON[7] and T0~T1 falling or rising phase counting setting by TEXCON[0].

5.12.4.6 Input Capture Function

The input capture or reset function is provided to capture or reset timer counter value. The capture function with free-counting capture mode and trigger-counting capture mode are configured by CAP_MODE (TEXCON[8]). The free-counting capture mode, reset mode, trigger-counting capture mode are described as follows.

5.12.4.7 Free-Counting Capture Mode

If CAP_MODE is cleared to “0”, TEXEN (TEXCON[3]) is set to “1” and RSTCAPN is set to “0”, the TDR will be captured into TCAP register when TEX (Timer External Pin) pin trigger condition occurred. The TEX trigger edge can be chosen by TEX_EDGE. The detail operation method is described in.

5.12.4.8 Reset Mode

If CAP_MODE is cleared to “0”, TEXEN (TEXCON[3]) is set to “1” and RSTCAPN is set to “1”, the TDR will be reset to “0” when TEX pin trigger condition happened. The TEX trigger edge can be chosen by TEX_EDGE. The detail operation method is described in.

5.12.4.9 Trigger-Counting Capture Mode

If CAP_MODE is set to “1”, TEXEN (TEXCON[3]) is set to “1” and RSTCAPN is set to “0”, the TDR will be reset to “0” then captured into TCAP register when TEX (Timer External Pin) pin trigger condition occurred. The TEX trigger edge can be chosen by TEX_EDGE. The detailed operation method is described.

When TEX trigger occurred, TEXIF (Timer External Interrupt Flag) is set to “1”, and the interrupt signal is generated, then, sent to NVIC to inform CPU if TEXIEN (Timer External Interrupt Enable Bit) is “1”. Also, the TEX source operating frequency should be less than 1/3 HCLK frequency if disable TEX de-bounce or less than 1/8 HCLK frequency if enabling TEX de-bounce. It also provides T0EX~T1EX enabled or disabled capture de-bounce function by TEXCON[6].

Table 5.12-1 Input Capture Mode Operation

Function	CAP_MODE (TEXCON[8])	RSTCAPN (TEXCON[4])	TEX_EDGE (TEXCON[2:1])	Operation Description
Free-counting Capture Mode	0	0	00	The high to zero transition on Timer External Input Pin is detected. TDR is captured to TCAP.
	0	0	01	The zero to high transition on Timer External Input Pin is detected. TDR is captured to TCAP.
	0	0	10	Either high to zero or zero to high transition on Timer External Input Pin is detected. TDR is captured to TCAP.
	0	0	11	Reserved
Reset Mode	0	1	00	The high to zero transition on Timer External Input Pin is detected. TDR is reset to “0”.
	0	1	01	The zero to high transition on Timer External Input Pin is detected. TDR is reset to “0”.
	0	1	10	Either high to zero or zero to high transition on Timer External Input Pin is detected. TDR is reset to “0”.
	0	1	11	Reserved
Trigger-Counting	1	0	00	Falling Edge Trigger: The 1st high to zero transition on Timer

Capture Mode				External Input Pin is detected to reset TDR as “0” and then starts counting, while the 2nd high to zero transition stops counting
	1	0	01	Rising Edge Trigger: The 1st zero to high transition on Timer External Input Pin is detected to reset TDR as “0” and then starts counting, while the 2nd zero to high transition stops counting.
	1	0	10	Level Change Trigger: The high to zero transition on Timer External Input Pin is detected to reset TDR as “0” and then starts counting, while zero to high transition stops counting.
	1	0	11	Level Change Trigger: The zero to high transition on Timer External Input Pin is detected to reset TDR as “0” and then starts counting, while high to zero transition stops counting.

5.12.5 Register Map

R: read only, **W:** write only, **R/W:** both read and write

Register	Offset	R/W	Description	Reset Value
TMR_BA = 0x4001_0000				
TCSR0	TMR_BA+0x00	R/W	Timer0 Control and Status Register	0x0000_0005
TCMPR0	TMR_BA+0x04	R/W	Timer0 Compare Register	0x0000_0000
TISR0	TMR_BA+0x08	R/W	Timer0 Interrupt Status Register	0x0000_0000
TDR0	TMR_BA+0x0C	R	Timer0 Data Register	0x0000_0000
TCAP0	TMR_BA+0x10	R	Timer0 Capture Data Register	0x0000_0000
TEXCON0	TMR_BA+0x14	R/W	Timer0 External Control Register	0x0000_0000
TEXISR0	TMR_BA+0x18	R/W	Timer0 External Interrupt Status Register	0x0000_0000
TCSR1	TMR_BA+0x20	R/W	Timer1 Control and Status Register	0x0000_0005
TCMPR1	TMR_BA+0x24	R/W	Timer1 Compare Register	0x0000_0000
TISR1	TMR_BA+0x28	R/W	Timer1 Interrupt Status Register	0x0000_0000
TDR1	TMR_BA+0x2C	R	Timer1 Data Register	0x0000_0000
TCAP1	TMR_BA+0x30	R	Timer1 Capture Data Register	0x0000_0000
TEXCON1	TMR_BA+0x34	R/W	Timer1 External Control Register	0x0000_0000
TEXISR1	TMR_BA+0x38	R/W	Timer1 External Interrupt Status Register	0x0000_0000

5.12.6 Register Description

Timer Control Register (TCSR)

Register	Offset	R/W	Description	Reset Value
TCSR0	TMR_BA+0x00	R/W	Timer0 Control and Status Register	0x0000_0005
TCSR1	TMR_BA+0x20	R/W	Timer1 Control and Status Register	0x0000_0005

31	30	29	28	27	26	25	24
DBGACK_TMR	CEN	IE	MODE		CRST	CACT	CTB
23	22	21	20	19	18	17	16
WAKE_EN	-						TDR_EN
15	14	13	12	11	10	9	8
-							
7	6	5	4	3	2	1	0
PRESCALE							

Bits	Description	
[31]	**DBGACK_TMR**	**ICE Debug Mode Acknowledge Disable (Write-protection Bit)** 1 = ICE debug mode acknowledgement Disabled. TIMER counter will keep going no matter ICE Debug mode acknowledged or not. 0 = ICE Debug mode acknowledgement effects TIMER counting. The TIMER counter will be held while ICE Debug mode acknowledged.
[30]	**CEN**	**Timer Enable Bit** 1 = Counting started. 0 = Counting stopped/suspended. **Note1**: In stop status, and then set CEN to “1” will enable the 24-bit up-timer keeps up counting from the last stop counting value. **Note2**: This bit is auto-cleared by hardware in one-shot mode (MODE = 00) when the associated timer interrupt is generated (IE = “1”).
[29]	**IE**	**Interrupt Enable Bit** 1 = Timer Interrupt Enabled. 0 = Timer Interrupt Disabled. If timer interrupt is enabled, the timer asserts its interrupt signal when the associated up-timer value is equal to TCMPR.
[28:27]	**MODE[1:0]**	**Timer Operation mode** **MODE** — **Timer Operation Mode** 00 — The timer is operating in One-shot mode. The associated interrupt signal is generated once (if IE is enabled) and CEN is

Bits	Description	
		automatically cleared by hardware.
		01 — The timer is operating in Periodic mode. The associated interrupt signal is generated periodically (if IE is enabled).
		10 — The timer is operating in Toggle mode. The interrupt signal is generated periodically (if IE is enabled). The associated signal (tout) is changing back and forth with 50% duty cycle.
		11 — The timer is operating in Continuous Counting mode. The associated interrupt signal is generated when TDR = TCMPR (if IE is enabled). However, the 24-bit up-timer counts continuously. Please refer to 5.12.4.4 for detailed description about Continuous Counting mode operation.
[26]	**CRST**	**Timer Reset Bit** Set this bit will reset the 24-bit up-timer, 8-bit pre-scale counter and also force CEN to "0". 1 = Timer's 8-bit pre-scale counter, internal 24-bit up-timer and CEN bit reset. 0 = No effect.
[25]	**CACT**	**Timer Active Status Bit (Read only)** This bit indicates the up-timer status. 1 = Timer active. 0 = Timer not active.
[24]	**CTB**	**Counter Mode Enable Bit** This bit is the counter mode enable bit. When Timer is used as an event counter, this bit should be set to "1" and Timer will work as an event counter. The counter detect phase can be selected as rising/falling edge of external pin by TX_PHASE field. 1 = Counter mode Enabled. 0 = Counter mode Disabled.
[23]	**WAKE_EN**	**Wake-Up Enable** When WAKE_EN is set and the TIF or TEXIF is set, the timer controller will generate a wake-up trigger event to CPU. 1 = Wake-up trigger event Enabled. 0 = Wake-up trigger event Disabled.
[22:17]	**-**	**Reserved**
[16]	**TDR_EN**	**Data Load Enable** When TDR_EN is set, TDR (Timer Data Register) will be updated continuously with the 24-bit up-timer value as the timer is counting. 1 = Timer Data Register update Enabled. 0 = Timer Data Register update Disabled.
[15:8]	**-**	**Reserved**
[7:0]	**PRESCALE [7:0]**	**Pre-Scale Counter** Clock input is divided by PRESCALE+1 before it is fed to the counter. If PRESCALE = "0", there is no scaling.

Timer Compare Register (TCMPR)

Register	Offset	R/W	Description	Reset Value
TCMPR0	TMR_BA+0x04	R/W	Timer0 Compare Register	0x0000_0000
TCMPR1	TMR_BA+0x24	R/W	Timer1 Compare Register	0x0000_0000

31	30	29	28	27	26	25	24
-							
23	**22**	**21**	**20**	**19**	**18**	**17**	**16**
TCMP							
15	**14**	**13**	**12**	**11**	**10**	**9**	**8**
TCMP							
7	**6**	**5**	**4**	**3**	**2**	**1**	**0**
TCMP							

Bits	Description	
[31:24]	**-**	**Reserved**
[23:0]	**TCMP[23:0]**	**Timer Compared Value** TCMP is a 24-bit compared register. When the internal 24-bit up-timer counts and its value is equal to TCMP value, a Timer Interrupt is requested if the timer interrupt is enabled with TCSR.IE[29] = “1”. The TCMP value defines the timer counting cycle time. Time-out period = (Period of timer clock input) * (8-bit PRESCALE + 1) * (24-bit TCMP) **Note1**: Never write “0” or “1” in TCMP, or the core will run into unknown state. **Note2**: When timer is operating at continuous counting mode, the 24-bit up-timer will count continuously if software writes a new value into TCMP. If timer is operating at other modes, the 24-bit up-timer will restart counting and using newest TCMP value to be the compared value if software writes a new value into TCMP.

Timer Interrupt Status Register (TISR)

Register	Offset	R/W	Description	Reset Value
TISR0	TMR_BA+0x08	R/W	Timer0 Interrupt Status Register	0x0000_0000
TISR1	TMR_BA+0x28	R/W	Timer1 Interrupt Status Register	0x0000_0000

31	30	29	28	27	26	25	24
-							
23	**22**	**21**	**20**	**19**	**18**	**17**	**16**
-							
15	**14**	**13**	**12**	**11**	**10**	**9**	**8**
-							
7	**6**	**5**	**4**	**3**	**2**	**1**	**0**
-						TWF	TIF

Bits	Description	
[31:2]	-	**Reserved**
[1]	**TWF**	**Timer Wake-up Flag** If timer causes CPU wakes up from power-down mode, this bit will be set to high. It must be cleared by software with writing “1” to this bit. 1 = CPU wakes up from sleep or power-down mode by timer time-out. 0 = Timer does not cause CPU wake-up.
[0]	**TIF**	**Timer Interrupt Flag** This bit indicates the interrupt status of timer. TIF bit is set by hardware when the up counting value of internal 24-bit up-timer matches the timer compared value (TCMP) and if the timer interrupt is enabled with TCSR.IE[29] = “1”. It is cleared by writing “1” to this bit.

Timer Data Register (TDR)

Register	Offset	R/W	Description	Reset Value
TDR0	TMR_BA+0x0C	R	Timer0 Data Register	0x0000_0000
TDR1	TMR_BA+0x2C	R	Timer1 Data Register	0x0000_0000

31	30	29	28	27	26	25	24
-							
23	**22**	**21**	**20**	**19**	**18**	**17**	**16**
TDR							
15	**14**	**13**	**12**	**11**	**10**	**9**	**8**
TDR							
7	**6**	**5**	**4**	**3**	**2**	**1**	**0**
TDR							

Bits	Description	
[31:24]	**-**	**Reserved**
[23:0]	**TDR[23:0]**	**Timer Data Register** This field indicates the current count value.

Timer Capture Data Register (TCAP)

Register	Offset	R/W	Description	Reset Value
TCAP0	TMR_BA+0x10	R	Timer0 Capture Data Register	0x0000_0000
TCAP1	TMR_BA+0x30	R	Timer1 Capture Data Register	0x0000_0000

31	30	29	28	27	26	25	24
-							
23	**22**	**21**	**20**	**19**	**18**	**17**	**16**
TCAP							
15	**14**	**13**	**12**	**11**	**10**	**9**	**8**
TCAP							
7	**6**	**5**	**4**	**3**	**2**	**1**	**0**
TCAP							

Bits	Description	
[31:24]	**-**	**Reserved**
[23:0]	**TCAP[23:0]**	**Timer Capture Data Register** When TEXEN (TEXCON[3]) is set, RSTCAPN (TEXCON[4]) is “0”, and the transition on the TEX pins associated TEX_EDGE (TEXCON[2:1]) setting is occurred, the internal 24-bit up-timer value will be loaded into TCAP. User can read this register for the counter value.

Timer External Control Register (TEXCON)

Register	Offset	R/W	Description	Reset Value
TEXCON0	TMR_BA+0x14	R/W	Timer0 External Control Register	0x0000_0000
TEXCON1	TMR_BA+0x34	R/W	Timer1 External Control Register	0x0000_0000

31	30	29	28	27	26	25	24
-							
23	**22**	**21**	**20**	**19**	**18**	**17**	**16**
-							
15	**14**	**13**	**12**	**11**	**10**	**9**	**8**
-							**CAP_MODE**
7	**6**	**5**	**4**	**3**	**2**	**1**	**0**
TCDB	**TEXDB**	**TEXIEN**	**RSTCAPN**	**TEXEN**	**TEX_EDGE**		**TX_PHASE**

Bits	Description	
[31:9]	**-**	**Reserved**
[8]	**CAP_MODE**	**Capture Mode Selection** 1 = Trigger-counting mode of timer capture function. 0 = Timer counter reset function or free-counting mode of timer capture function.
[7]	**TCDB**	**Timer Counter Pin De-bounce Enable Bit** 1 = De-bounce Enabled. 0 = De-bounce Disabled. If this bit is enabled, the edge of T0~T1 pin is detected with de-bounce circuit.
[6]	**TEXDB**	**Timer External Capture Pin De-bounce Enable Bit** 1 = De-bounce Enabled. 0 = De-bounce Disabled. If this bit is enabled, the edge of TEX pin is detected with de-bounce circuit.
[5]	**TEXIEN**	**Timer External Interrupt Enable Bit** 1 = Timer External Interrupt Enabled. 0 = Timer External Interrupt Disabled. If timer external interrupt is enabled, the timer asserts its external interrupt signal and sent to NVIC to inform CPU when the transition on the TEX pins associated with TEX_EDGE (TEXCON[2:1]) setting is happened. For example, while TEXIEN = “1”, TEXEN = “1”, and TEX_EDGE = 00, a high to zero transition on the TEX pin will cause the TEXIF (TEXISR[0]) interrupt flag to be set then the interrupt signal is generated and sent to NVIC to inform CPU.
[4]	**RSTCAPN**	**Timer External Reset Counter / Capture Mode Selection**

Bits	Description	
		1 = TEX transition is used as the timer counter reset function. 0 = TEX transition is used as the timer capture function.
[3]	**TEXEN**	**Timer External Pin Enable** This bit enables the reset/capture function on the TEX pin. 1 = The transition detected on the TEX pin will result in capture or reset of timer counter. 0 = The TEX pin will be ignored.
[2:1]	**TEX_EDGE [1:0]**	**Timer External Pin Edge Detection** **TEX_EDGE** / **Description** 00 — A high to zero transition on TEX will be detected. 01 — A zero to high transition on TEX will be detected. 10 — Either high to zero or zero to high transition on TEX will be detected. 11 — Reserved.
[0]	**TX_PHASE**	**Timer External Count Phase** This bit indicates the external count pin phase. 1 = A rising edge of external count pin will be counted. 0 = A falling edge of external count pin will be counted.

Timer External Interrupt Status Register (TEXISR)

Register	Offset	R/W	Description	Reset Value
TEXISR0	TMR_BA+0x18	R/W	Timer0 External Interrupt Status Register	0x0000_0000
TEXISR1	TMR_BA+0x38	R/W	Timer1 External Interrupt Status Register	0x0000_0000

31	30	29	28	27	26	25	24
-							
23	**22**	**21**	**20**	**19**	**18**	**17**	**16**
-							
15	**14**	**13**	**12**	**11**	**10**	**9**	**8**
-							
7	**6**	**5**	**4**	**3**	**2**	**1**	**0**
-							**TEXIF**

Bits	Description	
[31:1]	**-**	**Reserved**
[0]	**TEXIF**	**Timer External Interrupt Flag** This bit indicates the external interrupt status of the timer. This bit is set by hardware when TEXEN (TEXCON[3]) is set “1”, and the transition on the TEX pins associated with TEX_EDGE (TEXCON[2:1]) setting occurred. It is cleared by writing “1” to this bit. For example, while TEXEN = “1”, and TEX_EDGE = 00, a high to zero transition on the TEX pin causes the TEXIF to be set.

5.13 UART Interface Controller

The NuMicro Mini51™ series provides one channel of Universal Asynchronous Receiver/Transmitters (UART). UART performs Normal Speed UART, and support flow control function.

5.13.1 Overview

The Universal Asynchronous Receiver/Transmitter (UART) performs a serial-to-parallel conversion on data received from the peripheral, and a parallel-to-serial conversion on data transmitted from the CPU. The UART controller also supports IrDA SIR function, and RS-485 mode functions. Each UART channel supports six types of interrupts, including transmitter FIFO empty interrupt (INT_THRE), receiver threshold level reaching interrupt (INT_RDA), line status interrupt (parity error or framing error or break interrupt) (INT_RLS), receiver buffer time-out interrupt (INT_TOUT), MODEM/Wake-up status interrupt (INT_MODEM), and Buffer error interrupt (INT_BUF_ERR). Interrupt number 12 (vector number is 28) supports UART interrupt. Refer to Nested Vectored Interrupt Controller chapter for System Interrupt Map.

The UART is built-in with a 16-byte transmitter FIFO (TX_FIFO) and a 16-byte receiver FIFO (RX_FIFO) that reduces the number of interrupts presented to the CPU and the CPU can read the status of the UART at any time during the operation. The reported status information includes the type and condition of the transfer operations being performed by the UART, as well as 4 error conditions (parity error, framing error, break interrupt and buffer error) probably occur while receiving data. The UART includes a programmable baud rate generator that is capable of dividing crystal clock input by divisors to produce the clock that transmitter and receiver need. The baud rate equation is Baud Rate = UART_CLK / M * [BRD + 2], where M and BRD are defined in Baud Rate Divider Register (UA_BAUD). The following table lists the equations in the various conditions and the UART baud rate setting table.

Table 5.13-1 UART Baud Rate Setting Table

Mode	DIV_X_EN	DIV_X_ONE	Divider X	BRD	Baud Rate Equation
0	0	0	B	A	UART_CLK / [16 * (A+2)]
1	1	0	B	A	UART_CLK / [(B+1) * (A+2)] , B must >= 8
2	1	1	Don't care	A	UART_CLK / (A+2), A must >=3

Table 5.13-2 UART Baud Rate Setting Table

System clock = 22.1184 MHz			
Baud rate	**Mode0**	**Mode1**	**Mode2**
921600	Not Support	A=0, B=11	A=22
460800	A=1	A=1, B=15 A=2, B=11	A=46
230400	A=4	A=4, B=15 A=6, B=11	A=94
115200	A=10	A=10, B=15	A=190

		A=14, B=11	
57600	A=22	A=22, B=15 A=30, B=11	A=382
38400	A=34	A=62, B=8 A=46, B=11 A=34, B=15	A=574
19200	A=70	A=126, B=8 A=94, B=11 A=70, B=15	A=1150
9600	A=142	A=254, B=8 A=190, B=11 A=142, B=15	A=2302
4800	A=286	A=510, B=8 A=382, B=11 A=286, B=15	A=4606

5.13.1.1 Auto-Flow Control

The UART controller supports auto-flow control function that uses two low-level signals, CTSn (clear-to-send) and RTSn (request-to-send), to control the flow of data transfer between the UART and external devices (ex: Modem). When auto-flow is enabled, the UART is not allowed to receive data until the UART asserts RTSn to external device. When the number of bytes in the RX FIFO equals the value of RTS_TRI_LEV (UA_FCR[19:16]), the RTSn is de-asserted. The UART sends data out when UART controller detects CTSn is asserted from external device. If a validly asserted CTSn is not detected the UART controller will not send data out.

5.13.1.2 IrDA Function Mode

The UART controllers also provides Serial IrDA (SIR, Serial Infrared) function (user must set IrDA_EN (UA_FUN_SEL[1:0]) to enable IrDA function). The SIR specification defines a short-range infrared asynchronous serial transmission mode with one start bit, 8 data bits, and 1 stop bit. The maximum data rate is 115.2 Kbps (half duplex). The IrDA SIR block contains an IrDA SIR Protocol encoder/decoder. The IrDA SIR protocol is half-duplex only. Thus it cannot transmit and receive data at the same time. The IrDA SIR physical layer specifies a minimum 10ms transfer delay between transmission and reception. This delay feature must be implemented by software.

5.13.1.3 RS-485 Function Mode

Alternate function of UART controllers is RS-485 9 bit mode function, direction control provided by RTSn pin or can program GPIO (P0.1 for RTSn) to implement the function by software. The RS-485 mode is selected by setting the UA_FUN_SEL register to select RS-485 function. The RS-485 driver control is implemented using the RTSn control signal from an asynchronous serial port to enable the RS-485 driver. In RS-485 mode, many characteristics of the RX and TX are the same as UART.

5.13.2 Features

- Full duplex, asynchronous communications
- Separates receive/transmit 16 bytes entry FIFO for data payloads
- Supports hardware auto flow control/flow control function (CTSn, RTSn) and programmable RTSn flow control trigger level
- Programmable receiver buffer trigger level
- Supports programmable baud-rate generator for each channel individually
- Supports CTSn wake-up function
- Supports 7-bit receiver buffer time-out detection function
- Programmable transmitting data delay time between the last stop and the next start bit by setting UA_TOR[DLY] register
- Supports break error, frame error, parity error and receive/transmit buffer overflow detection function
- Fully programmable serial-interface characteristics
  - Programmable number of data bit, 5, 6, 7, 8 character
  - Programmable parity bit, even, odd, no parity or stick parity bit generation and detection
  - Programmable stop bit, 1, 1.5, or 2 stop bit generation
- Supports IrDA SIR function mode
  - Supports 3/16-bit duration for normal mode
- Supports RS-485 function mode
  - Supports RS-485 9-bit mode
  - Supports hardware or software RTSn control or software GPIO control to control transfer direction

5.13.3 Block Diagram

The UART clock control and block diagram are shown as follows.

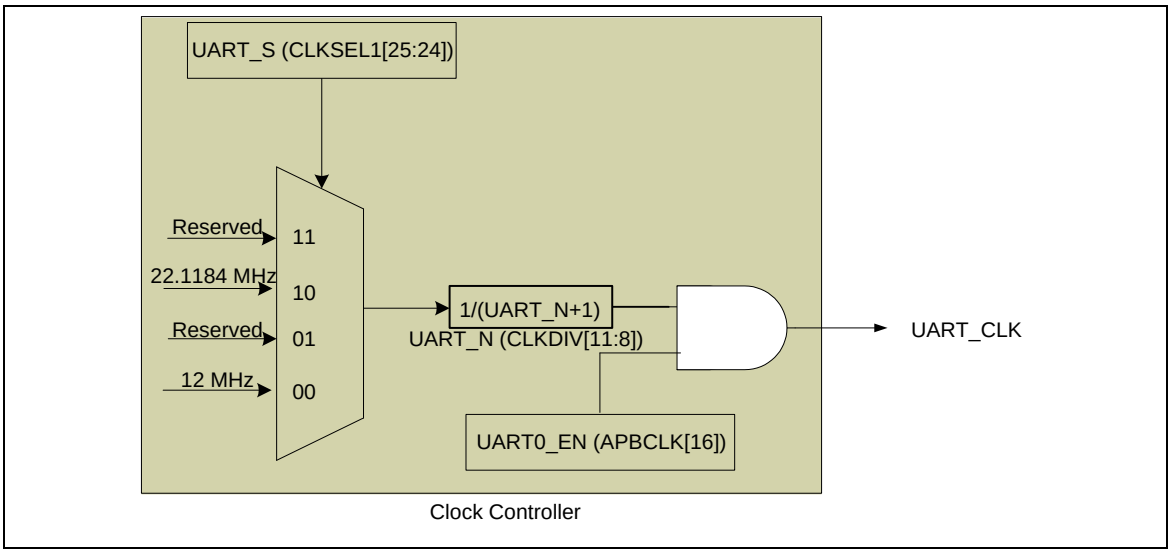

Figure 5.13-1 UART Clock Control Diagram

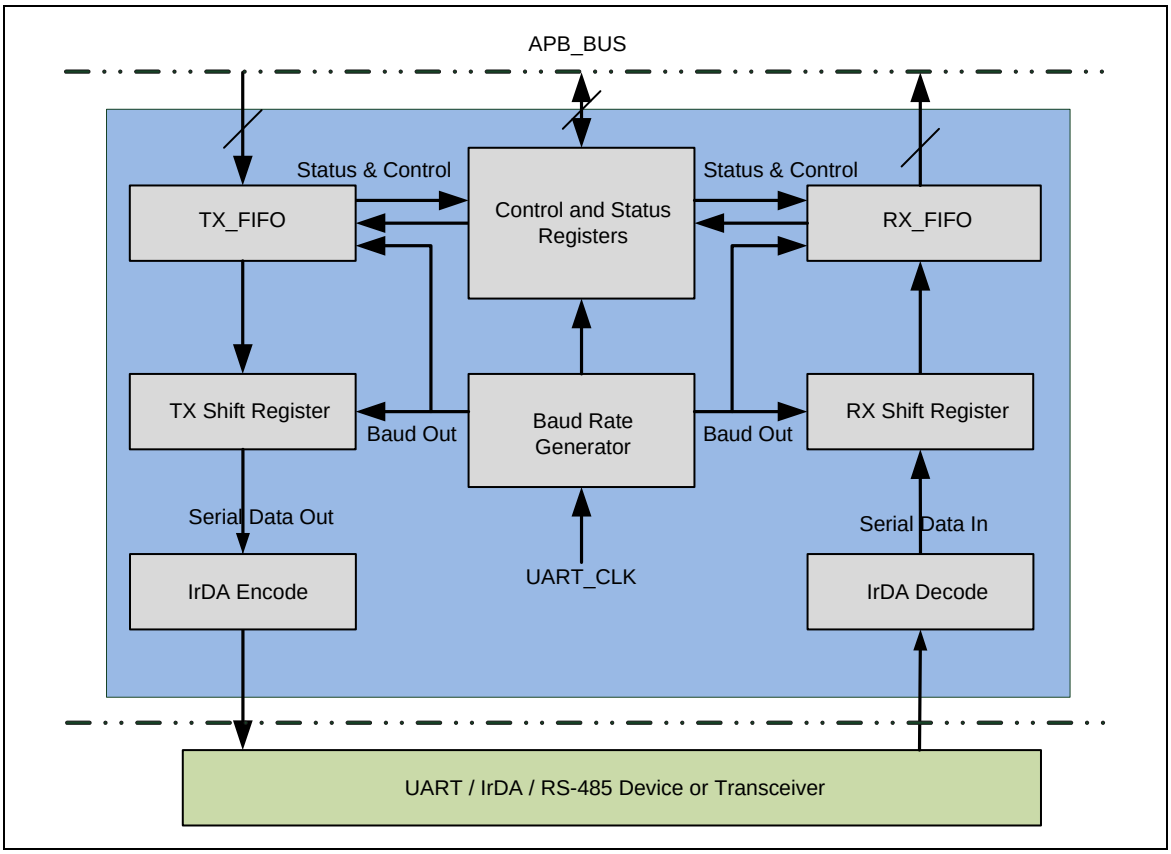

Figure 5.13-2 UART Block Diagram

TX_FIFO

The transmitter is buffered with a 16-byte FIFO to reduce the number of interrupts presented to the CPU.

RX_FIFO

The receiver is buffered with a 16-byte FIFO (plus three error bits per byte) to reduce the number of interrupts presented to the CPU.

TX Shift Register

This block is shifting the transmitting data out serial control block.

RX Shift Register

This block is shifting the receiving data in serial control block.

Baud Rate Generator

Dividing the external clock by the divisor to get the desired baud rate clock. Refer to baud rate equation.

IrDA Encode

This block is IrDA encode control block.

IrDA Decode

This block is IrDA decode control block.

Control and Status Register

This field is a register set which includes the FIFO control registers (UA_FCR), FIFO status registers (UA_FSR), and line control register (UA_LCR) for transmitter and receiver. The time-out control register (UA_TOR) identifies the condition of time-out interrupt. This register set also includes the interrupt enable register (UA_IER) and interrupt status register (UA_ISR) to enable or disable the responding interrupt and to identify the occurrence of the responding interrupt. There are six types of interrupts, including transmitter FIFO empty interrupt (INT_THRE), receiver threshold level reaching interrupt (INT_RDA), line status interrupt (parity error or framing error or break interrupt) (INT_RLS) , time-out interrupt (INT_TOUT), MODEM/Wake-up status interrupt (INT_MODEM), and Buffer error interrupt (INT_BUF_ERR).

5.13.4 Functional Description

5.13.4.1 Auto-flow Control

The following diagram demonstrates the auto-flow control block diagram.

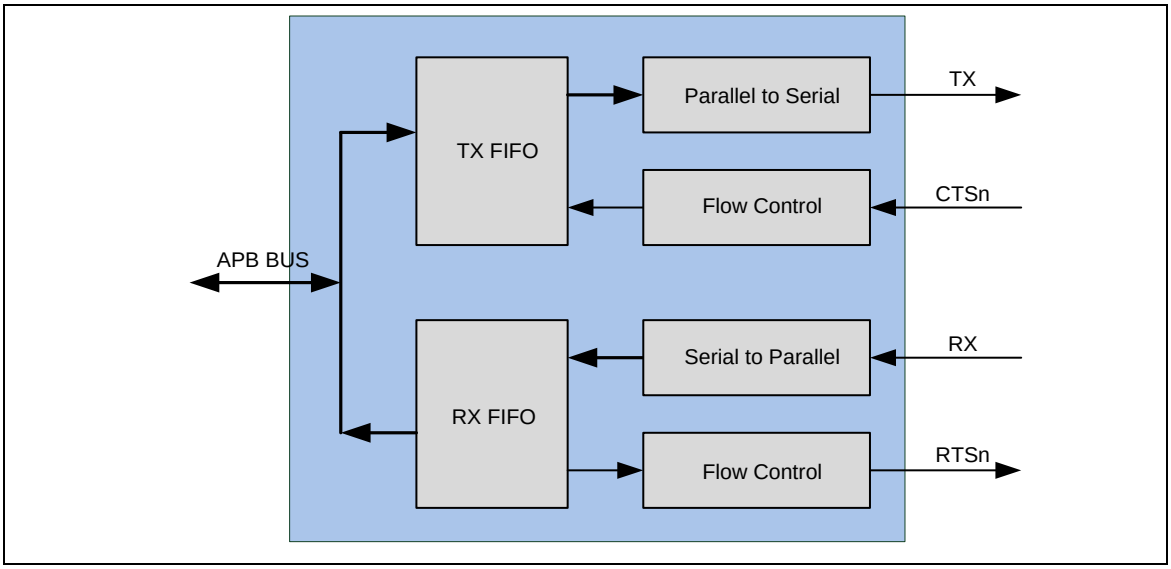

Figure 5.13-3 Auto Flow Control Block Diagram

5.13.4.2 IrDA Mode

The UART supports IrDA SIR (Serial Infrared) Transmit Encoder and Receive Decoder, and IrDA mode is selected by setting the IrDA_EN bit in UA_FUN_SEL register.

When in IrDA mode, the UA_BAUD[DIV_X_EN] register must be disabled.

Baud Rate = Clock / (16 * BRD), where BRD is Baud Rate Divider in UA_BAUD register.

The following diagram demonstrates the IrDA control block diagram.

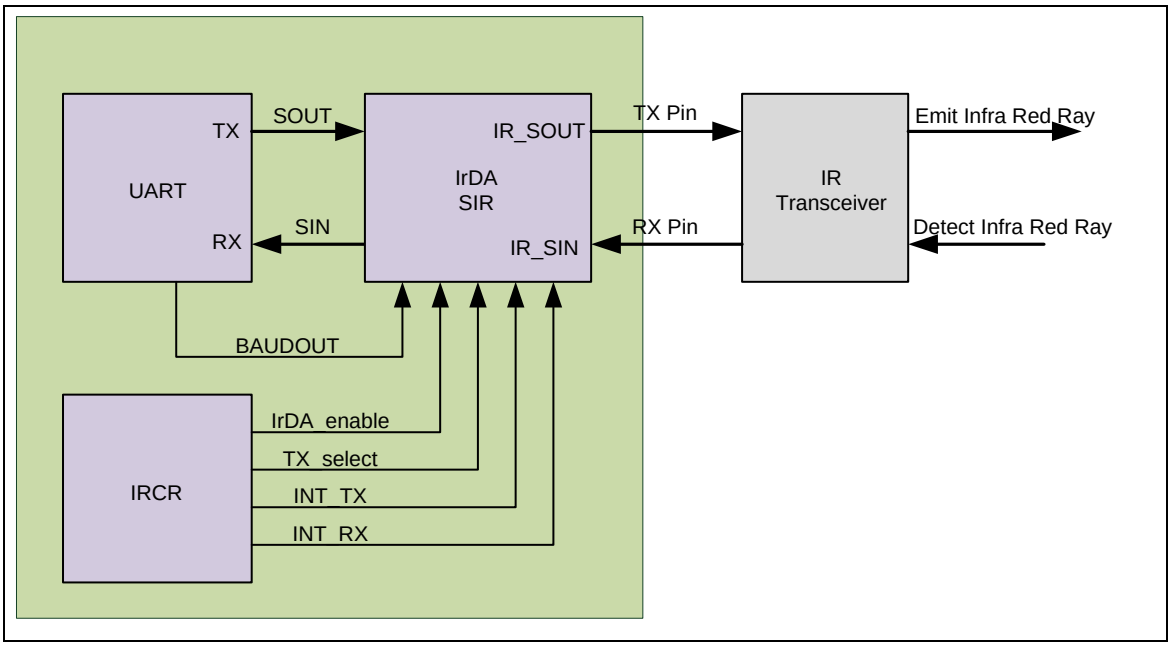

Figure 5.13-4 IrDA Block Diagram

IrDA SIR Transmit Encoder

The IrDA SIR Transmit Encoder modulates Non-Return-to Zero (NRZ) transmit bit stream output from UART. The IrDA SIR physical layer specifies use of Return-to-Zero, Inverted (RZI) modulation scheme which represent logic “0” as an infra light pulse. The modulated output pulse stream is transmitted to an external output driver and infrared Light Emitting Diode.

In Normal mode, the transmitted pulse width is specified as 3/16 period of baud rate.

IrDA SIR Receive Decoder

The IrDA SIR Receive Decoder demodulates the return-to-zero bit stream from the input detector and outputs the NRZ serial bits stream to the UART received data input. The decoder input is normally high in the idle state. (Because of this, IRCR[6] should be set as “1” by default.)

A start bit is detected when the decoder input is LOW.

IrDA SIR Operation

The IrDA SIR Encoder/decoder provides functionality which converts between UART data stream and half duplex serial SIR interface. The following diagram is IrDA encoder/decoder waveform:

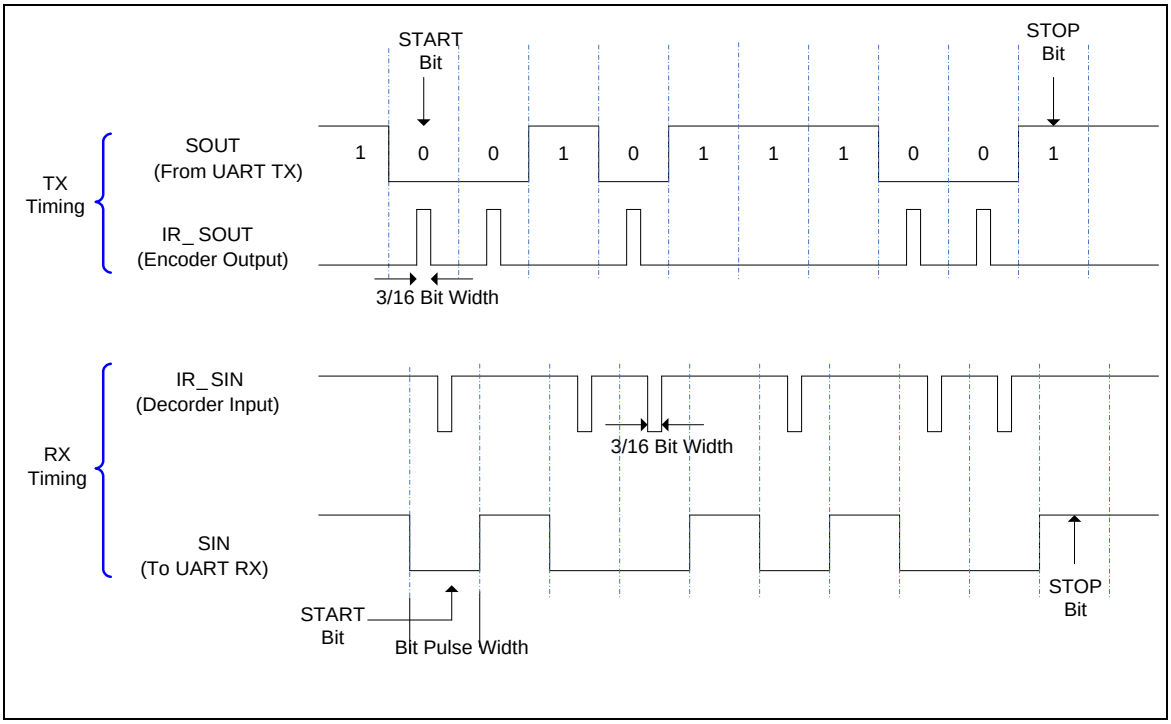

Figure 5.13-5 IrDA TX/RX Timing Diagram

5.13.4.3 RS-485 Function Mode

The UART support RS-485 9-bit mode function. The RS-485 mode is selected by setting the UA_FUN_SEL register to select RS-485 function. The RS-485 driver control is implemented using the RTSn control signal from an asynchronous serial port to enable the RS-485 driver. In RS-485 mode, many characteristics of the RX and TX are the same as UART.

In RS-485 transfer mode, the controller can be configured as a RS-485 addressable slave mode and the RS-485 master transmitter will identify an address character by setting the parity (9th bit) to “1”. For data characters, the parity is set to “0”. Software can program UA_LCR register to control the 9-th bit. (When the PBE, EPE and SPE are set, the 9-th bit is transmitted “0”; when PBE and SPE are set and EPE is cleared, the 9-th bit is transmitted 1.) The Controller supports three operation modes - RS-485 Normal Operation mode (NMM), RS-485 Auto Address Detection Operation mode (AAD), and RS-485 Auto Direction Control Operation mode (AUD). Software can choose any of the operation modes by programming UA_ALT_CSR register, and drive the transfer delay time between the last stop bit leaving the TX-FIFO and the de-assertion by setting UA_TOR[DLY] register.

RS-485 Normal Operation Mode (NMM)

In RS-485 Normal Operation mode, first, software must decide whether data before the address byte detected will be stored in RX-FIFO or not. If software wants to ignore data before address byte is detected, the flow will set UART_FCR[RX_DIS] and then enable UA_ALT_CSR[RS-485_NMM], and the receiver will ignore the data until an address byte is detected (bit9 = ”1”) and the address byte data will be stored in the RX-FIFO. If software wants to receive any data before address byte detected, the flow is to disable UART_FCR[RX_DIS] and then enable UA_ALT_CSR[RS-485_NMM], and the receiver will receive the data. If an address byte is

detected (bit9 = “1”), an interrupt will be generated to CPU and software can decide whether the receiver will be enabled or disabled to accept the following data byte by setting UA_ALT_CSR[RX_DIS]. If the receiver is enabled, all received byte data will be accepted and stored in the RX-FIFO; if the receiver is disabled, all received byte data will be ignored until the next address byte is detected. If software disables the receiver by setting UA_ALT_CSR[RX_DIS] register, when the next address byte is detected, the controller will clear the UA_ALT_CSR[RX_DIS] bit and the address byte data will be stored in the RX-FIFO.

RS-485 Auto Address Detection Operation Mode (AAD)

In RS-485 Auto Address Detection Operation mode, the receiver will ignore data until an address byte is detected (bit9 = “1”), and the address byte data matches the UA_ALT_CSR[ADDR_MATCH] value. The address byte data will be stored in the RX-FIFO. All the received byte data will be accepted and stored in the RX-FIFO and the address byte data does not match the UA_ALT_CSR[ADDR_MATCH] value.

RS-485 Auto Direction Mode (AUD)

Another option function of RS-485 controllers is RS-485 auto direction control function. The RS-485 driver control is implemented using the RTSn control signal from an asynchronous serial port to enable the RS-485 driver. The RTSn line is connected to the RS-485 driver enable such that setting the RTSn line to high (logic “1”) enables the RS-485 driver. Setting the RTSn line to low (logic “0”) will put the driver into the tri-state condition. User can set LEV_RTS in UA_MCR register to change the RTSn driving level.

Program sequence example:

1. Program FUN_SEL in UA_FUN_SEL to select RS-485 function.
2. Program the RX_DIS bit in UA_FCR register to determine whether to enable or disable RS-485 receiver.
3. Program the RS-485_NMM or RS-485_AAD mode.
4. If the RS-485_AAD mode is selected, the ADDR_MATCH is programmed for auto address match value.
5. Determine auto direction control by programming RS-485_AUD.

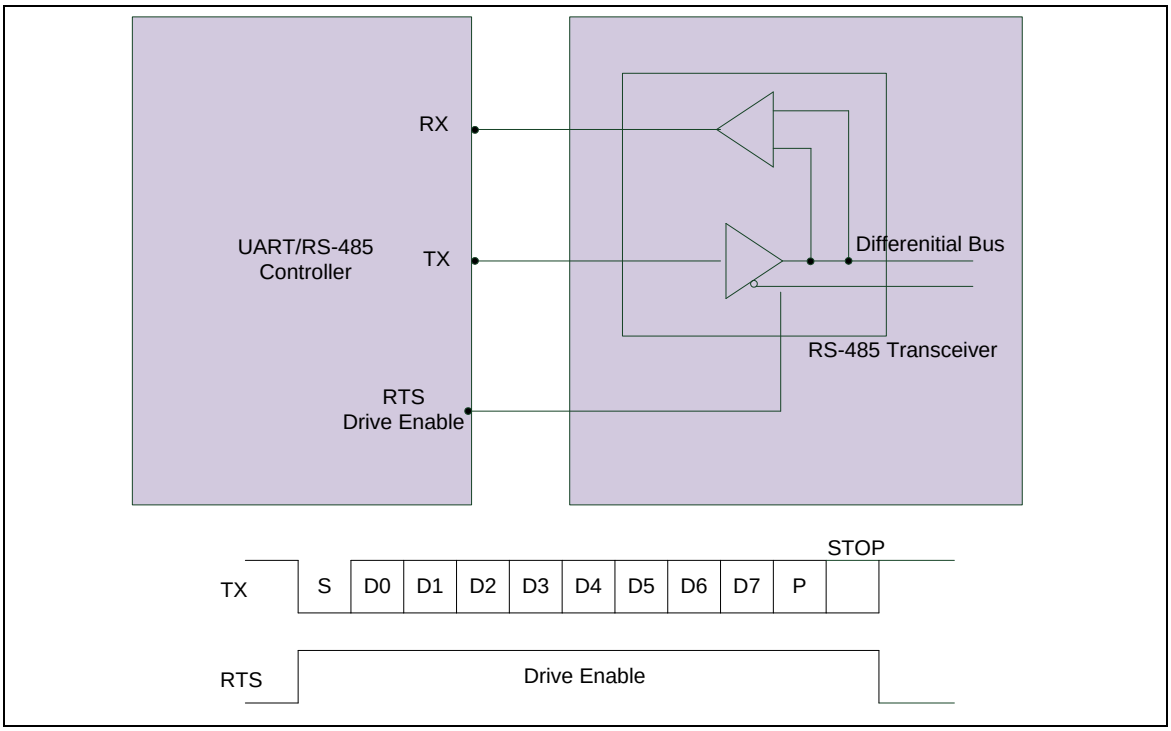

Figure 5.13-6 Structure of RS-485 Frame

5.13.5 Registers Map

R: read only, **W:** write only, **R/W:** both read and write

Register	Offset	R/W	Description	Reset Value
UART_BA = 0x4005_0000				
UA_RBR	UART_BA+0x00	R	UART Receive Buffer Register	Undefined
UA_THR	UART_BA+0x00	W	UART Transmit Holding Register	Undefined
UA_IER	UART_BA+0x04	R/W	UART Interrupt Enable Register	0x0000_0000
UA_FCR	UART_BA+0x08	R/W	UART FIFO Control Register	0x0000_0000
UA_LCR	UART_BA+0x0C	R/W	UART Line Control Register	0x0000_0000
UA_MCR	UART_BA+0x10	R/W	UART Modem Control Register	0x0000_0000
UA_MSR	UART_BA+0x14	R/W	UART Modem Status Register	0x0000_0000
UA_FSR	UART_BA+0x18	R/W	UART FIFO Status Register	0x1040_4000
UA_ISR	UART_BA+0x1C	R/W	UART Interrupt Status Register	0x0000_0002
UA_TOR	UART_BA+0x20	R/W	UART Time-out Register	0x0000_0000
UA_BAUD	UART_BA+0x24	R/W	UART Baud Rate Divisor Register	0x0F00_0000
UA_IRCR	UART_BA+0x28	R/W	UART IrDA Control Register	0x0000_0040
UA_ALT_CSR	UART_BA+0x2C	R/W	UART Alternate Control/Status Register	0x0000_0000
UA_FUN_SEL	UART_BA+0x30	R/W	UART Function Select Register	0x0000_0000

5.13.6 Register Description

Receive Buffer Register (UA_RBR)

Register	Offset	R/W	Description	Reset Value
UA_RBR	UART_BA+0x00	R	UART Receive Buffer Register	Undefined

31	30	29	28	27	26	25	24
-							
23	**22**	**21**	**20**	**19**	**18**	**17**	**16**
-							
15	**14**	**13**	**12**	**11**	**10**	**9**	**8**
-							
7	**6**	**5**	**4**	**3**	**2**	**1**	**0**
RBR							

Bits	Description	
[31:8]	**-**	**Reserved**
[7:0]	**RBR[7:0]**	**Receive Buffer Register (Read Only)** By reading this register, the UART will return a 8-bit data received from RX pin (LSB first).

Transmit Holding Register (UA_THR)

Register	Offset	R/W	Description	Reset Value
UA_THR	UART_BA+0x00	W	UART Transmit Holding Register	Undefined

31	30	29	28	27	26	25	24
-							
23	**22**	**21**	**20**	**19**	**18**	**17**	**16**
-							
15	**14**	**13**	**12**	**11**	**10**	**9**	**8**
-							
7	**6**	**5**	**4**	**3**	**2**	**1**	**0**
THR							

Bits	Description	
[31:8]	**-**	**Reserved**
[7:0]	**THR[7:0]**	**Transmit Holding Register** By writing to this register, the UART sends out an 8-bit data through the TX pin (LSB first).

Interrupt Enable Register (UA_IER)

Register	Offset	R/W	Description	Reset Value
UA_IER	UART_BA+0x04	R/W	UART Interrupt Enable Register	0x0000_0000

31	30	29	28	27	26	25	24
-							
23	**22**	**21**	**20**	**19**	**18**	**17**	**16**
-							
15	**14**	**13**	**12**	**11**	**10**	**9**	**8**
-		**AUTO_CTS_EN**	**AUTO_RTS_EN**	**TIME_OUT_EN**	-		
7	**6**	**5**	**4**	**3**	**2**	**1**	**0**
-	**WAKE_EN**	**BUF_ERR_IEN**	**RTO_IEN**	**MODEM_IEN**	**RLS_IEN**	**THRE_IEN**	**RDA_IEN**

Bits	Description	
[31:14]	-	**Reserved**
[13]	**AUTO_CTS_EN**	**CTS Auto Flow Control Enable** 1 = CTSn auto flow control Enabled. 0 = CTSn auto flow control Disabled. **Note**: When CTSn auto-flow is enabled, the UART will send data to external device when CTSn input assert (UART will not send data to device until CTSn is asserted).
[12]	**AUTO_RTS_EN**	**RTS Auto Flow Control Enable** 1 = RTSn auto flow control Enabled. 0 = RTSn auto flow control Disabled. **Note**: When RTSn auto-flow is enabled, if the number of bytes in the RX FIFO equals the UA_FCR [RTS_TRI_LEV], the UART will de-assert RTSn signal.
[11]	**TIME_OUT_EN**	**Time-out Counter Enable** 1 = Time-out counter Enabled. 0 = Time-out counter Disabled.
[10:7]	-	**Reserved**
[6]	**WAKE_EN**	**Wake-up CPU Function Enable** 1 = Wake-up function Enabled; when the system is in Deep Sleep mode, an external CTSn change will wake up CPU from Deep Sleep mode. 0 = UART wake-up CPU function Disabled.
[5]	**BUF_ERR_IEN**	**Buffer Error Interrupt Enable** 1 = INT_BUF_ERR Enabled. 0 = INT_BUF_ERR Masked off.

Bits	Description	
[4]	**RTO_IEN**	**RX Time-out Interrupt Enable** 1 = INT_TOUT Enabled. 0 = INT_TOUT Masked off.
[3]	**MODEM_IEN**	**Modem Status Interrupt Enable** 1 = INT_MODEM Enabled. 0 = INT_MODEM Masked off.
[2]	**RLS_IEN**	**Receive Line Status Interrupt Enable** 1 = INT_RLS Enabled. 0 = INT_RLS Masked off.
[1]	**THRE_IEN**	**Transmit Holding Register Empty Interrupt Enable** 1 = INT_THRE Enabled. 0 = INT_THRE Masked off.
[0]	**RDA_IEN**	**Receive Data Available Interrupt Enable** 1 = INT_RDA Enabled. 0 = INT_RDA Masked off.

FIFO Control Register (UA_FCR)

Register	Offset	R/W	Description	Reset Value
UA_FCR	UART_BA+0x08	R/W	UART FIFO Control Register	0x0000_0000

31	30	29	28	27	26	25	24
-							
23	**22**	**21**	**20**	**19**	**18**	**17**	**16**
-				RTS_TRI_LEV			
15	**14**	**13**	**12**	**11**	**10**	**9**	**8**
-							RX_DIS
7	**6**	**5**	**4**	**3**	**2**	**1**	**0**
RFITL				-	TFR	RFR	-

Bits	Description	
[31:20]	-	**Reserved**
[19:16]	**RTS_TRI_LEV [3:0]**	**RTSn Trigger Level (for Auto-flow Control Use)** RTS_TRI_LEV / Trigger Level (Bytes) 0000 / 01 0001 / 04 0010 / 08 0011 / 14 Others / 14 **Note**: This field is used for auto RTSn flow control.
[15:9]	-	**Reserved**
[8]	**RX_DIS**	**Receiver DisableRegister** The receiver is disabled or not (setting “1” to disable the receiver). 1 = Receiver Disabled. 0 = Receiver Enabled. **Note**: This field is used for RS-485 Normal Multi-drop mode. It should be programmed before UA_ALT_CSR[RS-485_NMM] is programmed.
[7:4]	**RFITL[3:0]**	**RX FIFO Interrupt (INT_RDA) Trigger Level** When the number of bytes in the received FIFO equals to the RFITL, the RDA_IF will be set (if UA_IER[RDA_IEN] is enabled, an interrupt will be generated). RFITL / INTR_RDA Trigger Level (Bytes) 0000 / 01

Bits	Description	
		0001 — 04 0010 — 08 0011 — 14 Others — 14
[3]	-	**Reserved**
[2]	**TFR**	**TX Field Software Reset** When TX_RST is set, all the byte in the transmit FIFO and TX internal state machine are cleared. 1 = The TX internal state machine and pointers reset. 0 = No effect. **Note**: This bit will auto clear needs at least 3 UART engine clock cycles.
[1]	**RFR**	**RX Field Software Reset** When RX_RST is set, all the byte in the receiver FIFO and RX internal state machine are cleared. 1 = The RX internal state machine and pointers reset. 0 = No effect. **Note**: This bit will auto clear needs at least 3 UART engine clock cycles.
[0]	-	**Reserved**

Line Control Register (UA_LCR)

Register	Offset	R/W	Description	Reset Value
UA_LCR	UART_BA+0x0C	R/W	UART Line Control Register	0x0000_0000

31	30	29	28	27	26	25	24
-							
23	**22**	**21**	**20**	**19**	**18**	**17**	**16**
-							
15	**14**	**13**	**12**	**11**	**10**	**9**	**8**
-							
7	**6**	**5**	**4**	**3**	**2**	**1**	**0**
-	**BCB**	**SPE**	**EPE**	**PBE**	**NSB**	**WLS**	

Bits	Description	
[31:7]	**-**	**Reserved**
[6]	**BCB**	**Break Control Bit** When this bit is set to logic "1", the serial data output (TX) is forced to the Spacing State (logic "0"). This bit acts only on TX and has no effect on the transmitter logic.
[5]	**SPE**	**Stick Parity Enable** 1 = When bits PBE, EPE and SPE are set, the parity bit is transmitted and checked as cleared. When PBE and SPE are set and EPE is cleared, the parity bit is transmitted and checked as set. 0 = Stick parity Disabled.
[4]	**EPE**	**Even Parity Enable** 1 = Even number of logic "1" transmitted or checked in the data word and parity bits. 0 = Odd number of logic "1" transmitted or checked in the data word and parity bits. **Note**: This bit has effect only when bit 3 (parity bit enable) is set.
[3]	**PBE**	**Parity Bit Enable** 1 = Parity bit generated or checked between the "last data word bit" and "stop bit" of the serial data. 0 = Parity bit not generated (transmit data) or checked (receive data) during transfer.
[2]	**NSB**	**Number of "STOP bit"** 1 = One and a half "STOP bit" generated in the transmitted data when 5-bit word length is selected; Two "STOP bit" is generated when 6, 7 and 8bit word length is selected. 0 = One "STOP bit" generated in the transmitted data.
[1:0]	**WLS[1:0]**	**Word Length Selection** **WLS** | **Character length**

Bits	Description		
		00	5 bits
		01	6 bits
		10	7 bits
		11	8 bits

MODEM Control Register (UA_MCR)

Register	Offset	R/W	Description	Reset Value
UA_MCR	UART_BA+0x10	R/W	UART Modem Control Register	0x0000_0000

31	30	29	28	27	26	25	24
-							
23	**22**	**21**	**20**	**19**	**18**	**17**	**16**
-							
15	**14**	**13**	**12**	**11**	**10**	**9**	**8**
-		RTS_ST	-			LEV_RTS	-
7	**6**	**5**	**4**	**3**	**2**	**1**	**0**
-						RTSn	-

Bits	Description	
[31:14]	-	**Reserved**
[13]	**RTS_ST**	**RTSn Pin State (Read Only)** This bit is the output pin status of RTSn.
[12:10]	-	**Reserved**
[9]	**LEV_RTS**	**RTSn Trigger Level** This bit can change the RTSn trigger level. 1 = High level triggered. 0 = Low level triggered. 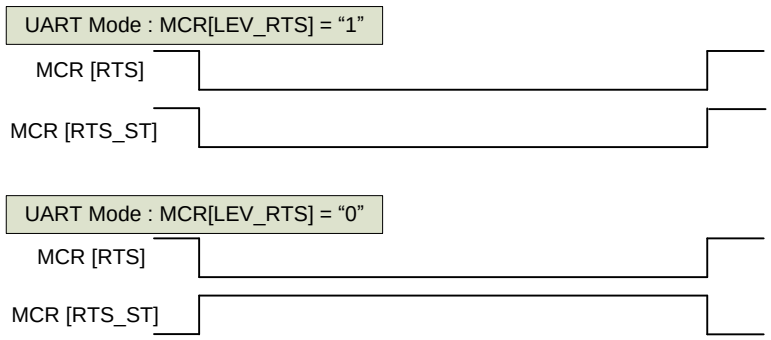

Bits	Description	
		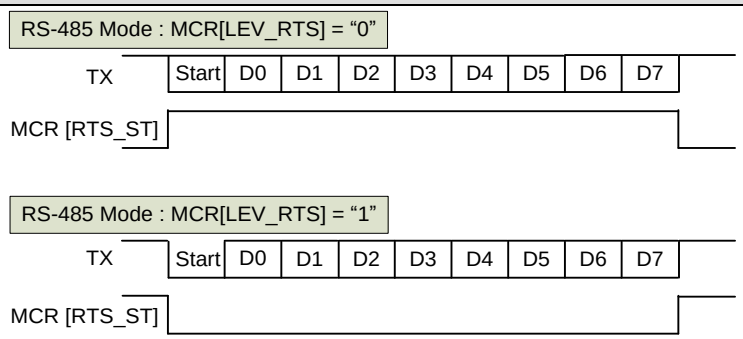
[8:2]	-	**Reserved**
[1]	**RTSn**	**RTSn (Request-to-Send) Signal** LEV_RTS / RTSn / RTS_ST 0 (Low Level Trigger) / 0 / 1 0 (Low Level Trigger) / 1 / 0 1 (High Level Trigger) / 0 / 0 1 (High Level Trigger) / 1 / 1
[0]	-	**Reserved**

Modem Status Register (UA_MSR)

Register	Offset	R/W	Description	Reset Value
UA_MSR	UART_BA+0x14	R/W	UART Modem Status Register	0x0000_0000

31	30	29	28	27	26	25	24
-							
23	**22**	**21**	**20**	**19**	**18**	**17**	**16**
-							
15	**14**	**13**	**12**	**11**	**10**	**9**	**8**
-							**LEV_CTS**
7	**6**	**5**	**4**	**3**	**2**	**1**	**0**
-			**CTS_ST**	-			**DCTSF**

Bits	Description	
[31:9]	**-**	**Reserved**
[8]	**LEV_CTS**	**CTSn Trigger Level** This bit can change the CTSn trigger level. 1 = High level triggered. 0 = Low level triggered.
[7:5]	**-**	**Reserved**
[4]	**CTS_ST**	**CTSn Pin Status (Read Only)** This bit is the pin status of CTSn.
[3:1]	**-**	**Reserved**
[0]	**DCTSF**	**Detect CTSn State Change Flag (Read Only)** This bit is set whenever CTSn input has change state, and it will generate Modem interrupt to CPU when UA_IER[MODEM_IEN]. **Note**: This bit is read only but can be cleared by writing “1” to it.

FIFO Status Register (UA_FSR)

Register	Offset	R/W	Description	Reset Value
UA_FSR	UART_BA+0x18	R/W	UART FIFO Status Register	0x1040_4000

31	30	29	28	27	26	25	24
-			TE_FLAG	-			TX_OVER_IF
23	**22**	**21**	**20**	**19**	**18**	**17**	**16**
TX_FULL	TX_EMPTY	TX_POINTER					
15	**14**	**13**	**12**	**11**	**10**	**9**	**8**
RX_FULL	RX_EMPTY	RX_POINTER					
7	**6**	**5**	**4**	**3**	**2**	**1**	**0**
-	BIF	FEF	PEF	RS-485_ ADD_DETF	-		RX_OVER_IF

Bits	Description	
[31:29]	-	**Reserved**
[28]	**TE_FLAG**	**Transmitter Empty Flag (Read Only)** Bit is set by hardware when TX FIFO (UA_THR) is empty and the STOP bit of the last byte has been transmitted. Bit is cleared automatically when TX FIFO is not empty or the last byte transmission has not completed.
[27:25]	-	**Reserved**
[24]	**TX_OVER_IF**	**TX Overflow Error Interrupt Flag (Read Only)** If TX FIFO (UA_THR) is full, an additional write to UA_THR will cause this bit to logic "1". **Note**: This bit is read only, but can be cleared by writing "1" to it.
[23]	**TX_FULL**	**Transmitter FIFO Full (Read Only)** This bit indicates TX FIFO full or not. This bit is set when TX_POINTER is equal to 16, otherwise is cleared by hardware.
[22]	**TX_EMPTY**	**Transmitter FIFO Empty (Read Only)** This bit indicates whether TX FIFO is empty or not. When the last byte of TX FIFO has been transferred to Transmitter Shift Register, hardware sets this bit high. It will be cleared when writing data into THR (TX FIFO not empty).
[21:16]	**TX_POINTER [5:0]**	**TX FIFO Pointer (Read Only)** This field indicates the TX FIFO Buffer Pointer. When CPU writes one byte into UA_THR, TX_POINTER increases one. When one byte of TX FIFO is transferred to Transmitter Shift Register, TX_POINTER decreases one.

Bits	Description	
[15]	**RX_FULL**	**Receiver FIFO Full (Read Only)** This bit initiates RX FIFO full or not. This bit is set when RX_POINTER is equal to 16; otherwise, it is cleared by hardware.
[14]	**RX_EMPTY**	**Receiver FIFO Empty (Read Only)** This bit initiates RX FIFO empty (or not). When the last byte of RX FIFO has been read by CPU, hardware sets this bit high. It will be cleared when UART receives any new data.
[13:8]	**RX_POINTER [5:0]**	**RX FIFO Pointer (Read Only)** This field indicates the RX FIFO Buffer Pointer. When the UART receives one byte from an external device, RX_POINTER increases one. When one byte of RX FIFO is read by CPU, RX_POINTER decreases one.
[7]	**-**	**Reserved**
[6]	**BIF**	**Break Interrupt Flag (Read Only)** This bit is set to a logic "1" when the received data input(RX) is held in the "spacing state" (logic 0) for the time longer than a full word transmission time (that is, the total time of "start bit" + data bits + parity + stop bits) and is reset when the CPU writes "1" to this bit. **Note**: This bit is read only, but can be cleared by writing "1" to it.
[5]	**FEF**	**Framing Error Flag (Read Only)** This bit is set to logic "1" when the received character does not have a valid "stop bit" (that is, the stop bit follows the last data bit or parity bit is detected as a logic "0"), and is reset when the CPU writes "1" to this bit. **Note**: This bit is read only, but can be cleared by writing "1" to it.
[4]	**PEF**	**Parity Error Flag (Read Only)** This bit is set to logic "1" when the received character does not have a valid "parity bit", and is reset when the CPU writes "1" to this bit. **Note**: This bit is read only, but can be cleared by writing "1" to it.
[3]	**RS-485_ ADD_DETF**	**RS-485 Address Byte Detection Flag (Read Only)** This bit is set to logic "1" and set UA_ALT_CSR[RS-485_ADD_EN] when in RS-485 mode the receiver detects the address byte received address byte character (bit9 = '1') bit", and it is reset when the CPU writes "1" to this bit. **Note**: This field is used for RS-485 function mode. **Note**: This bit is read only, but can be cleared by writing "1" to it.
[2:1]	**-**	**Reserved**
[0]	**RX_OVER_IF**	**RX Overflow Error IF (Read Only)** This bit is set when RX FIFO overflows. If the number of bytes of received data is greater than RX_FIFO (UA_RBR) size, 16 bytes of UART, this bit will be set. **Note**: This bit is read only, but can be cleared by writing "1" to it.

Interrupt Status Control Register (UA_ISR)

Register	Offset	R/W	Description	Reset Value
UA_ISR	UART_BA+0x1C	R/W	UART Interrupt Status Register	0x0000_0002

31	30	29	28	27	26	25	24
-							
23	**22**	**21**	**20**	**19**	**18**	**17**	**16**
-							
15	**14**	**13**	**12**	**11**	**10**	**9**	**8**
-		BUF_ERR_INT	TOUT_INT	MODEM_INT	RLS_INT	THRE_INT	RDA_INT
7	**6**	**5**	**4**	**3**	**2**	**1**	**0**
-		BUF_ERR_IF	TOUT_IF	MODEM_IF	RLS_IF	THRE_IF	RDA_IF

Bits	Description	
[31:14]	-	**Reserved**
[13]	**BUF_ERR_INT**	**Buffer Error Interrupt Indicator to Interrupt Controller (Read Only)** An AND output with inputs of BUF_ERR_IEN and BUF_ERR_IF.
[12]	**TOUT_INT**	**Time-out Interrupt Indicator to Interrupt Controller (Read Only)** This bit is set if TOUT_IEN and TOUT_IF are both set to “1”. 1 = The Tout interrupt generated. 0 = No Tout interrupt generated.
[11]	**MODEM_INT**	**MODEM Status Interrupt Indicator to Interrupt Controller (Read Only)** This bit is set if MODEM_IEN and MODEM_IF are both set to “1”. 1 = The Modem interrupt generated. 0 = No Modem interrupt generated.
[10]	**RLS_INT**	**Receive Line Status Interrupt Indicator to Interrupt Controller (Read Only)** This bit is set if RLS_IEN and RLS_IF are both set to “1”. 1 = The RLS interrupt generated. 0 = No RLS interrupt generated.
[9]	**THRE_INT**	**Transmit Holding Register Empty Interrupt Indicator to Interrupt Controller (Read Only)** This bit is set if THRE_IEN and THRE_IF are both set to “1”. 1 = The THRE interrupt generated. 0 = No THRE interrupt generated.
[8]	**RDA_INT**	**Receive Data Available Interrupt Indicator to Interrupt Controller (Read Only)** This bit is set if RDA_IEN and RDA_IF are both set to “1”. 1 = The RDA interrupt generated.

Bits	Description	
		0 = No RDA interrupt generated.
[7:6]	**-**	**Reserved**
[5]	**BUF_ERR_IF**	**Buffer Error Interrupt Flag (Read Only)** This bit is set when the TX or RX FIFO overflows or Break Interrupt Flag or Parity Error Flag or Frame Error Flag (TX_OVER_IF or RX_OVER_IF or BIF or PEF or FEF) is set. When BUF_ERR_IF is set, the transfer is not correct. If UA_IER [BUF_ERR_IEN] is enabled, the buffer error interrupt will be generated.
[4]	**TOUT_IF**	**Time-out Interrupt Flag (Read Only)** This bit is set when the RX FIFO is not empty and no activities occurred in the RX FIFO and the time-out counter equal to TOIC. If UA_IER[TOUT_IEN] is enabled, the Tout interrupt will be generated. **Note**: This bit is read only and user can read UA_RBR (RX is in active) to clear it.
[3]	**MODEM_IF**	**MODEM Interrupt Flag (Read Only)** This bit is set when the CTSn pin has state change (DCTSF = ”1”). If UA_IER [MODEM_IEN] is enabled, the Modem interrupt will be generated. **Note**: This bit is read only and reset to “0” when bit DCTSF is cleared by a write “1” on DCTSF.
[2]	**RLS_IF**	**Receive Line Interrupt Flag (Read Only)** This bit is set when the RX receive data have parity error, framing error or break error (at least one of 3 bits, BIF, FEF and PEF, is set). If UA_IER[RLS_IEN] is enabled, the RLS interrupt will be generated. **Note**: When in RS-485 function mode, this field include “receiver detect any address byte received address byte character (bit9 = “1”) bit". **Note**: This bit is read only and reset to “0” when all bits of BIF, FEF and PEF are cleared.
[1]	**THRE_IF**	**Transmit Holding Register Empty Interrupt Flag (Read Only)** This bit is set when the last data of TX FIFO is transferred to Transmitter Shift Register. If UA_IER [THRE_IEN] is enabled, the THRE interrupt will be generated. **Note**: This bit is read only and it will be cleared when writing data into THR (TX FIFO not empty).
[0]	**RDA_IF**	**Receive Data Available Interrupt Flag (Read Only)** When the number of bytes in the RX FIFO equals the RFITL then the RDA_IF will be set. If UA_IER[RDA_IEN] is enabled, the RDA interrupt will be generated. **Note**: This bit is read only and it will be cleared when the number of unread bytes of RX FIFO drops below the threshold level (RFITL).

Table 5.13-3 UART Interrupt Sources and Flags Table In Software Mode

UART Interrupt Source	Interrupt Enable Bit	Interrupt Indicator to Interrupt Controller	Interrupt Flag	Flag Clear
Buffer Error Interrupt (INT_BUF_ERR)	BUF_ERR_IEN	BUF_ERR_INT	HW_BUF_ERR_IF = (TX_OVER_IF or RX_OVER_IF or BIF or PEF or FEF)	Write '1' to TX_OVER_IF/ RX_OVER_IF/ BIF/PEF/FEF
RX Time-out Interrupt (INT_TOUT)	RTO_IEN	TOUT_INT	TOUT_IF	Read UA_RBR
Modem Status Interrupt (INT_MODEM)	MODEM_IEN	MODEM_INT	MODEM_IF = (DCTSF)	Write "1" to DCTSF
Receive Line Status Interrupt (INT_RLS)	RLS_IEN	RLS_INT	RLS_IF = (BIF or FEF or PEF or RS-485_ ADD_DETF)	Write "1" to BIF/FEF/PEF/ RS-485_ ADD_DETF
Transmit Holding Register Empty Interrupt (INT_THRE)	THRE_IEN	THRE_INT	THRE_IF	Write UA_THR
Receive Data Available Interrupt (INT_RDA)	RDA_IEN	RDA_INT	RDA_IF	Read UA_RBR

Time-out Register (UA_TOR)

Register	Offset	R/W	Description	Reset Value
UA_TOR	UART_BA+0x20	R/W	UART Time-out Register	0x0000_0000

31	30	29	28	27	26	25	24
-							
23	**22**	**21**	**20**	**19**	**18**	**17**	**16**
-							
15	**14**	**13**	**12**	**11**	**10**	**9**	**8**
DLY							
7	**6**	**5**	**4**	**3**	**2**	**1**	**0**
TOIC							

Bits	Description	
[31:16]	-	**Reserved**
[15:8]	**DLY[7:0]**	**TX Delay Time Value** This field is used to program the transfer delay time between the last stop bit and next start bit. 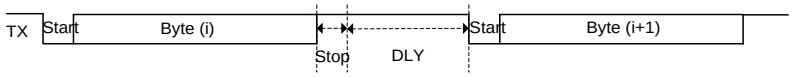
[7:0]	**TOIC[7:0]**	**Time-out Interrupt Comparator** The time-out counter resets and starts counting (the counting clock = baud rate) whenever the RX FIFO receives a new data word. Once the content of time-out counter (TOUT_CNT) is equal to that of time-out interrupt comparator (TOIC), a receiver time-out interrupt (INT_TOUT) is generated if UA_IER[RTO_IEN]. A new incoming data word or RX FIFO empty clears INT_TOUT.

Baud Rate Divider Register (UA_BAUD)

Register	Offset	R/W	Description	Reset Value
UA_BAUD	UART_BA+0x24	R/W	UART Baud Rate Divisor Register	0x0F00_0000

31	30	29	28	27	26	25	24
-		DIV_X_EN	DIV_X_ONE	DIVIDER_X			
23	**22**	**21**	**20**	**19**	**18**	**17**	**16**
-							
15	**14**	**13**	**12**	**11**	**10**	**9**	**8**
BRD							
7	**6**	**5**	**4**	**3**	**2**	**1**	**0**
BRD							

Bits	Description	
[31:30]	**-**	**Reserved**
[29]	**DIV_X_EN**	**Divider X Enable** The BRD = baud rate divider, and the baud rate equation is:Baud Rate = Clock / [M * (BRD + 2)], The default value of M is 16. 1 = The divider X Enabled (the equation of M = X+1, but DIVIDER_X [27:24] must >= 8). 0 = The divider X Disabled (the equation of M = 16). Refer to the table below for more information. **Note**: When in IrDA mode, this bit must be disabled.
[28]	**DIV_X_ONE**	**Divider X Equal 1** 1 = Divider M = “1” (the equation of M = “1”, but BRD [15:0] must >= 3). 0 = Divider M = “any value” (the equation of M = X+1, but DIVIDER_X[27:24] must >= 8). Refer to the table below for more information.
[27:24]	**DIVIDER_X[3:0]**	**Divider X** The baud rate divider M = X+1.
[23:16]	**-**	**Reserved**
[15:0]	**BRD[15:0]**	**Baud Rate Divider** The field indicates the baud rate divider.

Table 5.13-4 UART Baud Rate Setting Table

Mode	DIV_X_EN	DIV_X_ONE	Divider X	BRD	Baud Rate Equation
0	0	0	B	A	UART_CLK / [16 * (A+2)]
1	1	0	B	A	UART_CLK / [(B+1) * (A+2)] , B must >= 8
2	1	1	Don't care	A	UART_CLK / (A+2), A must >=3

IrDA Control Register (IRCR)

Register	Offset	R/W	Description	Reset Value
UA_IRCR	UART_BA+0x28	R/W	UART IrDA Control Register	0x0000_0040

31	30	29	28	27	26	25	24
-							
23	**22**	**21**	**20**	**19**	**18**	**17**	**16**
-							
15	**14**	**13**	**12**	**11**	**10**	**9**	**8**
-							
7	**6**	**5**	**4**	**3**	**2**	**1**	**0**
-	INV_RX	INV_TX	-			TX_SELECT	-

Bits	Description	
[31:7]	-	**Reserved**
[6]	**INV_RX**	**INV_RX** 1 = RX input signal inversed. 0 = No inversion.
[5]	**INV_TX**	**INV_TX** 1 = TX output signal inversed. 0 = No inversion.
[4:2]	-	**Reserved**
[1]	**TX_SELECT**	**TX_SELECT** 1 = IrDA transmitter Enabled. 0 = IrDA receiver Enabled. **Note**: When in IrDA mode, the UA_BAUD[DIV_X_EN] register must be disabled (the baud equation must be Clock / 16 * (BRD).
[0]	-	**Reserved**

UART Alternate Control/Status Register (UA_ALT_CSR)

Register	Offset	R/W	Description	Reset Value
UA_ALT_CSR	UART_BA+0x2C	R/W	UART Alternate Control/Status Register	0x0000_0000

31	30	29	28	27	26	25	24
ADDR_MATCH							
23	**22**	**21**	**20**	**19**	**18**	**17**	**16**
-							
15	**14**	**13**	**12**	**11**	**10**	**9**	**8**
RS485_ADD_EN	**-**				**RS485_AUD**	**RS485_AAD**	**RS485_NMM**
7	**6**	**5**	**4**	**3**	**2**	**1**	**0**
-							

Bits	Description	
[31:24]	**ADDR_MATCH [7:0]**	**Address Match Value Register** This field contains the RS-485 address match values. **Note**: This field is used for Auto RS-485 Address Detection mode.
[23:16]	**-**	**Reserved**
[15]	**RS485_ADD_EN**	**RS-485 Address Detection Enable** This bit is use to enable RS-485 Address Detection mode. 1 = Address Detection mode Enabled. 0 = Address Detection mode Disabled. **Note**: This field is used for any RS-485 Operation mode.
[14:11]	**-**	**Reserved**
[10]	**RS485_AUD**	**RS-485 Auto Direction Mode (AUD)** 1 = RS-485 Auto Direction Operation mode (AUD) Enabled. 0 = RS-485 Auto Direction Operation mode (AUD) Disabled. **Note**: It is able to be active in RS-485_AAD or RS-485_NMM Operation mode.
[9]	**RS485_AAD**	**RS-485 Auto Address Detection Operation Mode (AAD)** 1 = RS-485 Auto Address Detection Operation mode (AAD) Enabled. 0 = RS-485 Auto Address Detection Operation mode (AAD) Disabled. **Note**: It is unable to be active in RS-485_NMM Operation mode.
[8]	**RS485_NMM**	**RS-485 Normal Multi-drop Operation Mode (NMM)** 1 = RS-485 Normal Multi-drop Operation mode (NMM) Enabled. 0 = RS-485 Normal Multi-drop Operation mode (NMM) Disabled. **Note**: It is unable to be active in RS-485_AAD Operation mode.

Bits	Description	
[7:0]	-	**Reserved**

UART Function Select Register (UA_FUN_SEL)

Register	Offset	R/W	Description	Reset Value
UA_FUN_SEL	UART_BA+0x30	R/W	UART Function Select Register	0x0000_0000

31	30	29	28	27	26	25	24
-							
23	**22**	**21**	**20**	**19**	**18**	**17**	**16**
-							
15	**14**	**13**	**12**	**11**	**10**	**9**	**8**
-							
7	**6**	**5**	**4**	**3**	**2**	**1**	**0**
-						FUN_SEL	

Bits	Description	
[31:2]	-	**Reserved**
[1:0]	**FUN_SEL[1:0]**	**Function Select Enable**

FUN_SEL	Description
00	UART Function
01	Reserved.
10	Enable IrDA Function
11	Enable RS-485 Function

5.14 Watchdog Timer

5.14.1 Overview

The purpose of Watchdog Timer (WDT) is to perform a system reset after software runs into a problem. This prevents system from hanging for an infinite period of time. Besides, the Watchdog Timer supports another function to wake up CPU from Power-down mode. The Watchdog timer includes an 18-bit free running counter with programmable time-out intervals. The following table shows the Watchdog time-out interval selection and the following figure shows the timing of Watchdog interrupt signal and reset signal.

Setting WTE (WTCR[7]) will enable the watchdog timer and the WDT counter starts counting up. When the counter reaches the selected time-out interval, the Watchdog timer interrupt flag WTIF will be set immediately to request a WDT interrupt if the Watchdog timer interrupt enable bit WTIE is set; in the meanwhile, a specified delay time (1024 * TWDT) follows the time-out event. User must set WTR (WTCR[0]) (Watchdog Timer Reset) high to reset the 18-bit WDT counter to avoid CPU from Watchdog Timer Reset before the delay time expires. The WTR bit is cleared automatically by hardware after the WDT counter is reset. There are eight time-out intervals with specific delay time which are selected by Watchdog timer interval select bits WTIS (WTCR[10:8]). If the WDT counter has not been cleared after the specific delay time expires, the Watchdog timer will set Watchdog Timer Reset Flag (WTRF) high and reset CPU. This reset will last 63 WDT clocks (TRST) and then CPU restarts executing program from reset vector (0x0000_0000). WTRF will not be cleared by Watchdog reset. User may poll WTRF through software to recognize the reset source. WDT also provides the wake-up function. When chip is powered down and the Watchdog Timer Wake-up Function Enable bit (WTCR[4]) is set, if the WDT counter has not been cleared after the specific delay time expires, the chip will be waked up from Power-down state.

WTIS	WTR Timeout Interval T_{TIS}	Interrupt Period T_{INT}	WTR Timeout Interval (WDT_CLK = 10 KHz) T_{TIS}	WTR Reset Interval (WDT_CLK = 10 KHz) T_{WTR}
000	$2^4 * T_{WDT}$	$1024 * T_{WDT}$	1.6 ms	104 ms
001	$2^6 * T_{WDT}$	$1024 * T_{WDT}$	6.4 ms	108.8 ms
010	$2^8 * T_{WDT}$	$1024 * T_{WDT}$	25.6 ms	128 ms
011	$2^{10} * T_{WDT}$	$1024 * T_{WDT}$	102.4 ms	204.8 ms
100	$2^{12} * T_{WDT}$	$1024 * T_{WDT}$	407 ms	512 ms
101	$2^{14} * T_{WDT}$	$1024 * T_{WDT}$	1.638 s	1.741 s
110	$2^{16} * T_{WDT}$	$1024 * T_{WDT}$	6.553 s	6.6.656 s
111	$2^{18} * T_{WDT}$	$1024 * T_{WDT}$	26.214 s	26.316 s

Table 5.14-1 Watchdog Time-out Interval Selection

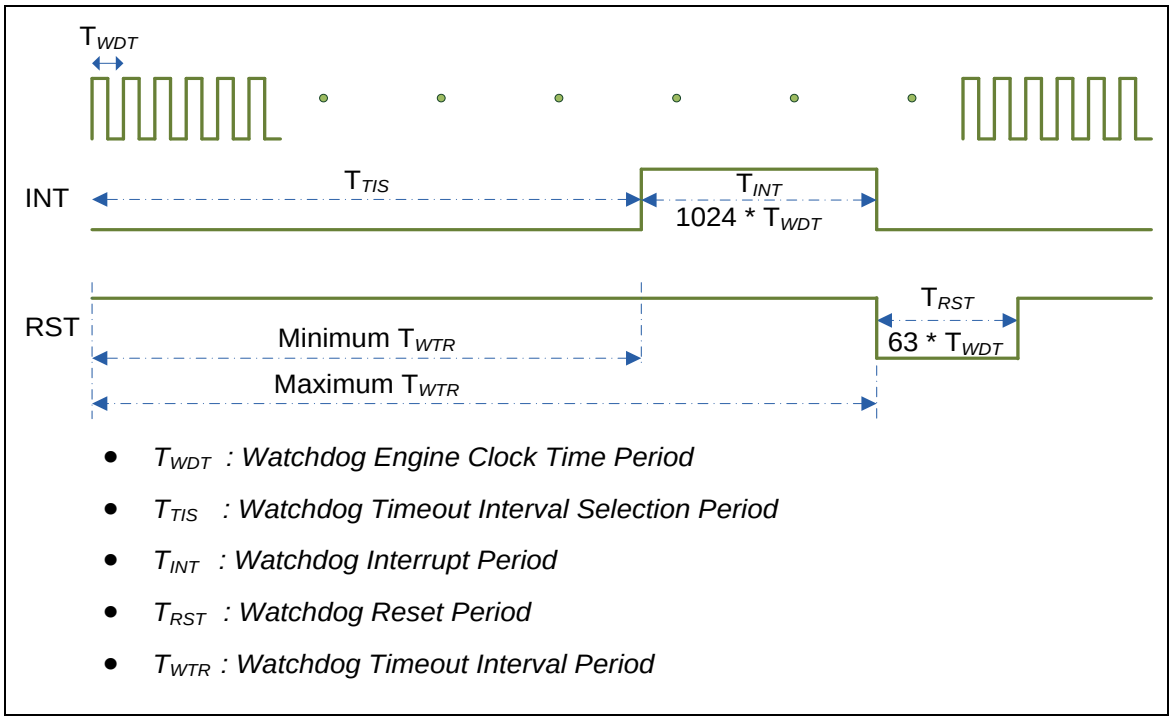

Figure 5.14-1 Timing of Interrupt and Reset Signal

5.14.2 Features

- 18-bit free running counter to avoid CPU from Watchdog Timer Reset before the delay time expires.
- Selectable time-out interval (24 ~ 218) and the time-out interval is 104 ms ~ 26.3168 s (if WDT_CLK = 10 KHz).
- Reset period = (1 / 10 KHz) * 63, if WDT_CLK = 10 KHz.

5.14.3 Block Diagram

The Watchdog Timer clock control and block diagram are shown as follows.

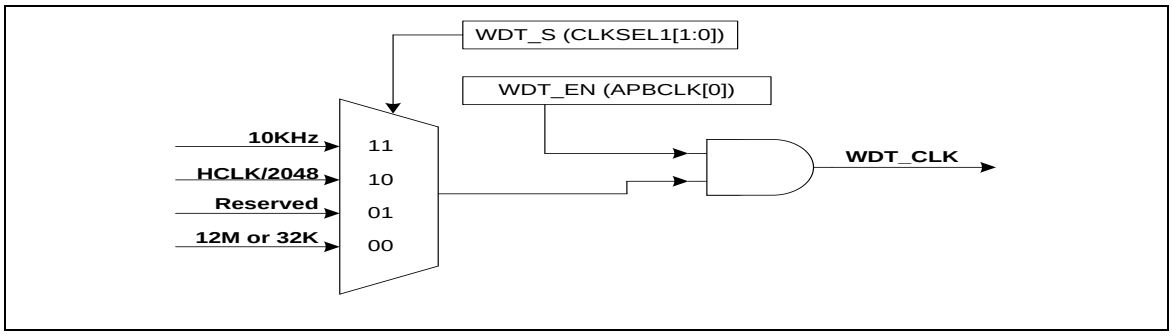

Figure 5.14-2 Watchdog Timer Clock Control

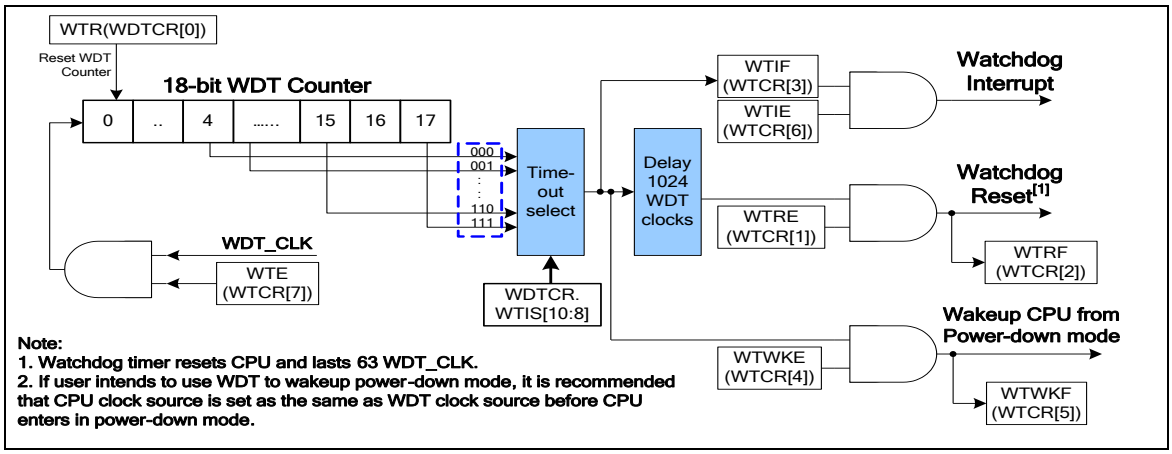

Figure 5.14-3 Watchdog Timer Block Diagram

5.14.4 Watchdog Timer Control Registers Map

R: read only, **W**: write only, **R/W**: both read and write

Register	Offset	R/W	Description	Reset Value
WDT_BA = 0x4000_4000				
WTCR	WDT_BA+0x00	R/W	Watchdog Timer Control Register	0x0000_0700

5.14.5 Register Description

Watchdog Timer Control Register (WTCR)

Register	Offset	R/W	Description	Reset Value
WTCR	WDT_BA+0x00	R/W	Watchdog Timer Control Register	0x0000_0700

Note: All bits in this register are write-protected. To program it, an open lock sequence is needed, by sequentially writing 0x59, 0x16, and 0x88 to register RegLockAddr at address GCR_BA + 0x100.

31	30	29	28	27	26	25	24
DBGACK_WDT	-						
23	**22**	**21**	**20**	**19**	**18**	**17**	**16**
-							
15	**14**	**13**	**12**	**11**	**10**	**9**	**8**
-					**WTIS**		
7	**6**	**5**	**4**	**3**	**2**	**1**	**0**
WTE	**WTIE**	**WTWKF**	**WTWKE**	**WTIF**	**WTRF**	**WTRE**	**WTR**

Bits	Description	
[31]	**DBGACK_WDT**	**ICE Debug Mode Acknowledge Disable (write-protection bit)** 1 = ICE Debug mode acknowledgement Disabled. The Watchdog Timer counter will keep on no matter ICE Debug mode acknowledged or not. 0 = ICE Debug mode acknowledgement affects Watchdog Timer counting. The Watchdog Timer counter will be held while ICE Debug mode is acknowledged.
[30:11]	-	**Reserved**

<table>
<tr><th>Bits</th><th colspan="2">Description</th></tr>
<tr><td>[10:8]</td><td>WTIS[2:0]</td><td>

Watchdog Timer Interval Selection

These three bits select the time-out interval for the Watchdog timer.

<table>
<tr><th>WTIS</th><th>Time-out Interval Selection</th><th>Interrupt Period</th><th>WTR Time-out Interval (WDT_CLK=10 kHz)</th></tr>
<tr><td>000</td><td>24 * TWDT</td><td>(24 + 1024) * TWDT</td><td>1.6 ms ~ 104 ms</td></tr>
<tr><td>001</td><td>26 * TWDT</td><td>(26 + 1024) * TWDT</td><td>6.4 ms ~ 108.8 ms</td></tr>
<tr><td>010</td><td>28 * TWDT</td><td>(28 + 1024) * TWDT</td><td>25.6 ms ~ 128 ms</td></tr>
<tr><td>011</td><td>210 * TWDT</td><td>(210 + 1024) * TWDT</td><td>102.4 ms ~ 204.8 ms</td></tr>
<tr><td>100</td><td>212 * TWDT</td><td>(212 + 1024) * TWDT</td><td>409.6 ms ~ 512 ms</td></tr>
<tr><td>101</td><td>214 * TWDT</td><td>(214 + 1024) * TWDT</td><td>1.6384 s ~ 1.7408 s</td></tr>
<tr><td>110</td><td>216 * TWDT</td><td>(216 + 1024) * TWDT</td><td>6.5536 s ~ 6.656 s</td></tr>
<tr><td>111</td><td>218 * TWDT</td><td>(218 + 1024) * TWDT</td><td>26.2144 s ~ 26.3168 s</td></tr>
</table>

</td></tr>
<tr><td>[7]</td><td>WTE</td><td>

Watchdog Timer Enable

1 = Watchdog timer Enabled.

0 = Watchdog timer Disabled (this action will reset the internal counter).

</td></tr>
<tr><td>[6]</td><td>WTIE</td><td>

Watchdog Timer Interrupt Enable

1 = Watchdog timer interrupt Enabled.

0 = Watchdog timer interrupt Disabled.

</td></tr>
<tr><td>[5]</td><td>WTWKF</td><td>

Watchdog Timer Wake-up Flag

If Watchdog timer causes CPU wakes up from Power-down mode, this bit will be set to high. It must be cleared by software with a write “1” to this bit.

1 = CPU Wake-up from sleep or Power-down mode by Watchdog time-out.

0 = Watchdog timer does not cause CPU wake up.

</td></tr>
<tr><td>[4]</td><td>WTWKE</td><td>

Watchdog Timer Wake-up Function Enable bit

1 = Wake-up function Enabled so that Watchdog timer time-out can wake-up CPU from Power-down mode.

0 = Watchdog timer Wake-up CPU function Disabled.

</td></tr>
<tr><td>[3]</td><td>WTIF</td><td>

Watchdog Timer Interrupt Flag

If the Watchdog timer interrupt is Enabled, hardware will set this bit to indicate that the Watchdog timer interrupt has occurred.

1 = Watchdog timer interrupt occurs.

0 = Watchdog timer interrupt does not occur.

Note: This bit is cleared by writing “1” to this bit.

</td></tr>
</table>

Bits	Description	
[2]	**WTRF**	**Watchdog Timer Reset Flag** When the Watchdog timer initiates a reset, the hardware will set this bit. This flag can be read by software to determine the source of reset. Software is responsible to clear it manually by writing “1” to it. If WTRE is disabled, then the Watchdog timer has no effect on this bit. 1 = Watchdog Timer Reset occurs. 0 = Watchdog Timer Reset does not occur. **Note:** This bit is cleared by writing “1” to this bit.
[1]	**WTRE**	**Watchdog Timer Reset Enable** Setting this bit will enable the Watchdog Timer Reset function. 1 = Watchdog Timer Reset function Enabled. 0 = Watchdog Timer Reset function Disabled.
[0]	**WTR**	**Clear Watchdog Timer** Set this bit will clear the Watchdog timer. 1 = The contents of the Watchdog Timer Reset. 0 = No effect. **Note:** This bit will be automatically cleared after a few clock cycles.

6 ARM® CORTEX™-M0 CORE

6.1 Overview

The Cortex™-M0 processor is a configurable, multistage, 32-bit RISC processor which has an AMBA AHB-Lite interface and includes an NVIC component. It also has optional hardware debug functionality. The processor can execute Thumb code and is compatible with other Cortex-M profile processors. The profile supports two modes - Thread mode and Handler mode. Handler mode is entered as a result of an exception. An exception return can only be issued in Handler mode. Thread mode is entered on Reset and can be entered as a result of an exception return. Figure 6.1-1 shows the functional controller of the processor.

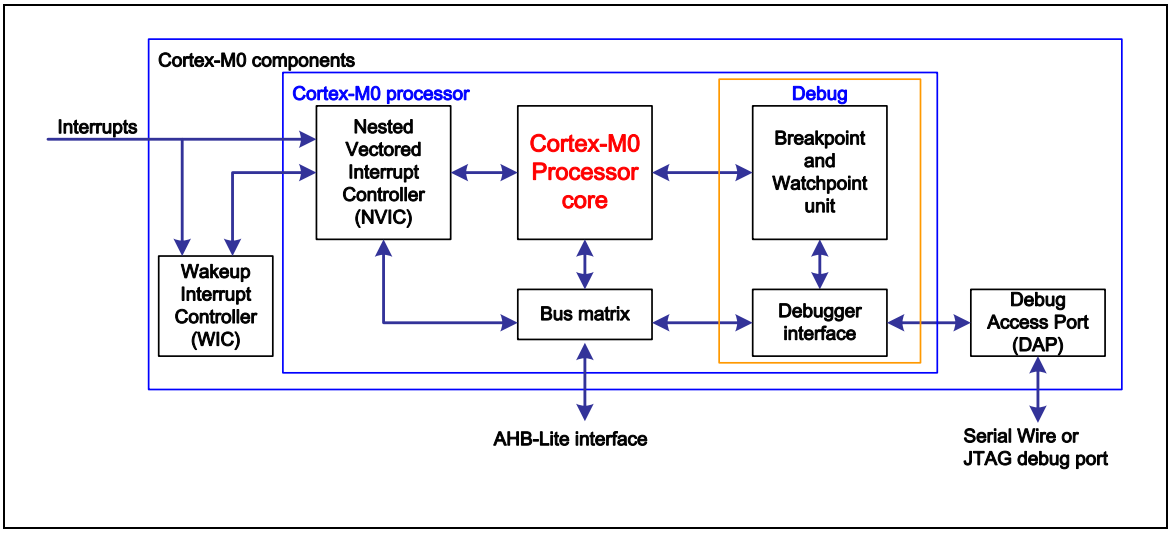

Figure 6.1-1 Functional Block Diagram

6.2 Features

- A low gate count processor
  - ARMv6-M Thumb® instruction set
  - Thumb-2 technology
  - ARMv6-M compliant 24-bit SysTick timer
  - A 32-bit hardware multiplier
  - Supports little-endian data accesses
  - Deterministic, fixed-latency, interrupt handling
  - Load/store-multiples and multicycle-multiplies that can be abandoned and restarted to facilitate rapid interrupt handling
  - C Application Binary Interface compliant exception model:

    ARMv6-M, C Application Binary Interface (C-ABI) compliant exception model that enables the use of pure C functions as interrupt handlers
  - Low power Idle mode entry using Wait For Interrupt (WFI), Wait For Event (WFE) instructions, or the return from interrupt sleep-on-exit feature
- NVIC
  - 32 external interrupt inputs, each with four levels of priority
  - Dedicated Non-Maskable Interrupt (NMI) input
  - Supports both level-sensitive and pulse-sensitive interrupt lines
  - Wake-up Interrupt Controller (WIC) with ultra-low power Idle mode support
- Debug support
  - Four hardware breakpoints
  - Two watchpoints
  - Program Counter Sampling Register (PCSR) for non-intrusive code profiling
  - Single step and vector catch capabilities
- Bus interfaces
  - Single 32-bit AMBA-3 AHB-Lite system interface that provides simple integration to all system peripherals and memory
  - Single 32-bit slave port that supports the Debug Access Port DAP (DAP)

6.3 System Timer (SysTick)

The Cortex-M0 includes an integrated system timer, SysTick, which provides a simple, 24-bit clear-on-write, decrementing, wrap-on-zero counter with a flexible control mechanism. The counter can be used as a Real Time Operating System (RTOS) tick timer or as a simple counter.

When system timer is enabled, it will count down from the value in the SysTick Current Value Register (SYST_CVR) to zero, and reload (wrap) to the value in the SysTick Reload Value Register (SYST_RVR) on the next clock edge, and then decrement on subsequent clocks. When the counter transitions to zero, the COUNTFLAG status bit is set. The COUNTFLAG bit clears on read.

The SYST_CVR value is UNKNOWN on reset. Software should write to the register to clear it to zero before enabling the feature. This ensures the timer to count from the SYST_RVR value rather than an arbitrary value when it is enabled.

If the SYST_RVR is zero, the timer will be maintained with a current value of zero after it is reloaded with this value. This mechanism can be used to disable the feature independently from the timer enable bit.

For more detailed information, please refer to the “ARM® Cortex™-M0 Technical Reference Manual” and “ARM® v6-M Architecture Reference Manual”.

6.3.1 System Timer Control Register Map

R: read only, **W**: write only, **R/W**: both read and write

Register	Offset	R/W	Description	Reset Value
SCS_BA = 0xE000_E000				
SYST_CSR	SCS_BA+0x10	R/W	SysTick Control and Status	0x0000_0000
SYST_RVR	SCS_BA+0x14	R/W	SysTick Reload value	0x00XX_XXXX
SYST_CVR	SCS_BA+0x18	R/W	SysTick Current value	0x00XX_XXXX

6.3.2 System Timer Control Register

SysTick Control and Status (SYST_CSR)

Register	Offset	R/W	Description	Reset Value
SYST_CSR	SCS_BA+0x10	R/W	SysTick Control and Status	0x0000_0000

31	30	29	28	27	26	25	24
-							
23	**22**	**21**	**20**	**19**	**18**	**17**	**16**
-							**COUNTFLAG**
15	**14**	**13**	**12**	**11**	**10**	**9**	**8**
-							
7	**6**	**5**	**4**	**3**	**2**	**1**	**0**
-					**CLKSRC**	**TICKINT**	**ENABLE**

Bits	Description	
[31:17]	**-**	**Reserved**
[16]	**COUNTFLAG**	Returns “1” if timer counted to 0 since this register was read last time. COUNTFLAG is set by a count transition from 1 to 0. COUNTFLAG is cleared on read or by a write to the Current Value register.
[15:3]	**-**	**Reserved**
[2]	**CLKSRC**	1 = Core clock used for SysTick If no external clock provided; this bit will be read as “1” and ignore writes. 0 = Clock source is optional (refer to STCLK_S).
[1]	**TICKINT**	1 = Counting down to 0 will cause the SysTick exception to be pended. Clearing the SysTick Current Value register by a register write in software will not cause SysTick to be pended. 0 = Counting down to 0 does not cause the SysTick exception to be pended. Software can use COUNTFLAG to determine if a count to zero has occurred.
[0]	**ENABLE**	1 = The counter will operate in a multi-shot manner. 0 = The counter Disabled.

SysTick Reload Value Register (SYST_RVR)

Register	Offset	R/W	Description	Reset Value
SYST_RVR	SCS_BA+0x14	R/W	SysTick Reload Value Register	0x00XX_XXXX

31	30	29	28	27	26	25	24
-							
23	**22**	**21**	**20**	**19**	**18**	**17**	**16**
RELOAD							
15	**14**	**13**	**12**	**11**	**10**	**9**	**8**
RELOAD							
7	**6**	**5**	**4**	**3**	**2**	**1**	**0**
RELOAD							

Bits	Description	
[31:24]	**-**	**Reserved**
[23:0]	**RELOAD[23:0]**	Value to load into the Current Value register when the counter reaches 0.

SysTick Current Value Register (SYST_CVR)

Register	Offset	R/W	Description	Reset Value
SYST_CVR	SCS _BA+0x18	R/W	SysTick Current Value Register	0x00XX_XXXX

31	30	29	28	27	26	25	24
-							
23	**22**	**21**	**20**	**19**	**18**	**17**	**16**
CURRENT							
15	**14**	**13**	**12**	**11**	**10**	**9**	**8**
CURRENT							
7	**6**	**5**	**4**	**3**	**2**	**1**	**0**
CURRENT							

Bits	Description	
[31:24]	**-**	**Reserved**
[23:0]	**CURRENT[23:0]**	Current counter value. This is the value of the counter at the time it is sampled. The counter does not provide read-modify-write protection. The register is write-clear. Software write of any value will clear the register to “0”. Bits RAZ is not supported (see SysTick Reload Value Register).

6.4 System Control Registers

Cortex-M0 status and operation mode control are managed System Control Registers. Including CPUID, Cortex-M0 interrupt priority and Cortex-M0 power management can be controlled through these system control registers.

For more detailed information, please refer to the "ARM® Cortex™-M0 Technical Reference Manual" and "ARM® v6-M Architecture Reference Manual".

6.4.1 System Control Register Memory Map

R: read only, **W**: write only, **R/W**: both read and write

Register	Offset	R/W	Description	Reset Value
SCS_BA = 0xE000_E000				
CPUID	SCS_BA+0xD00	R	CPUID Base Register	0x410C_C200
ICSR	SCS_BA+0xD04	R/W	Interrupt Control State Register	0x0000_0000
AIRCR	SCS_BA+0xD0C	R/W	Application Interrupt and Reset Control Register	0xFA05_0000
SCR	SCS_BA+0xD10	R/W	System Control Register	0x0000_0000
SHPR2	SCS_BA+0xD1C	R/W	System Handler Priority Register 2	0x0000_0000
SHPR3	SCS_BA+0xD20	R/W	System Handler Priority Register 3	0x0000_0000

6.4.2 System Control Register

CPUID Base Register (CPUID)

Register	Offset	R/W	Description	Reset Value
CPUID	SCS_BA+0xD00	R	CPUID Base Register	0x410C_C200

31	30	29	28	27	26	25	24
IMPLEMENTER							
23	**22**	**21**	**20**	**19**	**18**	**17**	**16**
-				**PART**			
15	**14**	**13**	**12**	**11**	**10**	**9**	**8**
PARTNO							
7	**6**	**5**	**4**	**3**	**2**	**1**	**0**
PARTNO				**REVISION**			

Bits	Description	
[31:24]	**IMPLEMENTER [7:0]**	Implementer code assigned by ARM. (ARM = 0x41).
[23:20]	**-**	**Reserved**
[19:16]	**PART[3:0]**	Read as 0xC for ARMv6-M parts.
[15:4]	**PARTNO[11:0]**	Read as 0xC20.
[3:0]	**REVISION[3:0]**	Read as 0x0.

Interrupt Control State Register (ICSR)

Register	Offset	R/W	Description	Reset Value
ICSR	SCS_BA+0xD04	R/W	Interrupt Control State Register	0x0000_0000

31	30	29	28	27	26	25	24
NMIPENDSET	-		PENDSVSET	PENDSVCLR	PENDSTSET	PENDSTCLR	-
23	**22**	**21**	**20**	**19**	**18**	**17**	**16**
ISRPREEMPT	ISRPENDING	-	VECTPENDING				
15	**14**	**13**	**12**	**11**	**10**	**9**	**8**
VECTPENDING				-			VECTACTIVE
7	**6**	**5**	**4**	**3**	**2**	**1**	**0**
VECTACTIVE							

Bits	Description	
[31]	**NMIPENDSET**	**NMI Set-pending Bit** Write: 0 = No effect. 1 = NMI exception state changed to pending. Read: 0 = NMI exception not pending. 1 = NMI exception pending. Because NMI is the highest-priority exception, normally the processor enters the NMI exception handler as soon as it detects a write of 1 to this bit. Entering the handler clears this bit to 0. This means a read of this bit by the NMI exception handler returns 1 only if the NMI signal is reasserted while the processor is executing that handler.
[30:29]	**-**	**Reserved.**
[28]	**PENDSVSET**	**PendSV Set-pending Bit** Write: 0 = No effect. 1 = PendSV exception state changed to pending. Read: 0 = PendSV exception not pending. 1 = PendSV exception pending. Writing 1 to this bit is the only way to set the PendSV exception state to pending.

Bits	Description	
[27]	**PENDSVCLR**	**PendSV Clear-pending Bit (Write Only)** Write: 0 = No effect. 1 = The pending state removed from the PendSV exception.
[26]	**PENDSTSET**	**SysTick Exception Set-pending Bit** Write: 0 = No effect. 1 = SysTick exception state changed to pending. Read: 0 = SysTick exception not pending. 1 = SysTick exception pending.
[25]	**PENDSTCLR**	**SysTick Exception Clear-pending Bit (Write Only)** Write: 0 = No effect. 1 = The pending state removed from the SysTick exception.
[24]	**-**	**Reserved.**
[23]	**ISRPREEMPT**	**Interrupt Preemption (Read Only)** If set, a pending exception will be serviced on exit from the debug halt state.
[22]	**ISRPENDING**	**Interrupt Pending Flag (Read Only)** Excluding NMI and Faults. 0 = Interrupt not pending. 1 = Interrupt pending.
[21]	**-**	**Reserved.**
[20:12]	**VECTPENDING [8:0]**	**Vector Pending Indicator (Read Only)** This field indicates the exception number of the highest priority pending enabled exception: 0 = No pending exceptions. Non-zero = The exception number of the highest priority pending enabled exception.
[11:9]	**-**	**Reserved.**
[8:0]	**VECTACTIVE [8:0]**	**Vector Active Indicator (Read Only)** This field contains the active exception number: 0 = Thread mode. Non-zero = The exception number of the currently active exception.

Application Interrupt and Reset Control Register (AIRCR)

Register	Offset	R/W	Description	Reset Value
AIRCR	SCS_BA+0xD0C	R/W	Application Interrupt and Reset Control Register	0xFA05_0000

31	30	29	28	27	26	25	24
VECTORKEY							
23	**22**	**21**	**20**	**19**	**18**	**17**	**16**
VECTORKEY							
15	**14**	**13**	**12**	**11**	**10**	**9**	**8**
-							
7	**6**	**5**	**4**	**3**	**2**	**1**	**0**
-					**SYSRESETREQ**	**VECTCLKACTIVE**	**-**

Bits	Description	
[31:16]	**VECTORKEY [15:0]**	When writing this register, this field should be 0x05FA; otherwise, the write action will be unpredictable.
[15:3]	**-**	**Reserved**
[2]	**SYSRESETREQ**	Writing this bit "1" will cause a reset signal to be asserted to the chip to indicate a reset is requested. The bit is a write only bit and self-clears as part of the reset sequence.
[1]	**VECTCLRACTIVE**	Setting this bit to "1" will clear all active state information for fixed and configurable exceptions. The bit is a write only bit and can only be written when the core is halted. **Note**: It is the debugger's responsibility to re-initialize the stack.
[0]	**-**	**Reserved**

System Control Register (SCR)

Register	Offset	R/W	Description	Reset Value
SCR	SCS_BA+0xD10	R/W	System Control Register	0x0000_0000

31	30	29	28	27	26	25	24
-							
23	**22**	**21**	**20**	**19**	**18**	**17**	**16**
-							
15	**14**	**13**	**12**	**11**	**10**	**9**	**8**
-							
7	**6**	**5**	**4**	**3**	**2**	**1**	**0**
-			**SEVONPEND**	-	**SLEEPDEEP**	**SLEEPONEXIT**	-

Bits	Description	
[31:5]	-	**Reserved**
[4]	**SEVONPEND**	**Send Event on Pending Bit** 0 = Only the enabled interrupts or events can wake up the processor, disabled interrupts are excluded. 1 = The enabled events and all interrupts, including disabled interrupts, can wake up the processor. When an event or interrupt enters pending state, the event signal wakes up the processor from WFE. If the processor is not waiting for an event, the event is registered and affects next WFE. The processor also wakes up on execution of an SEV instruction or an external event.
[3]	-	**Reserved**
[2]	**SLEEPDEEP**	**Deep Sleep Mode Enable** This bit controls whether the processor uses sleep or deep sleep as its low power mode: 0 = Sleep. 1 = Deep sleep.
[1]	**SLEEPONEXIT**	**Sleep-On-exit Enable** This bit controls sleep-on-exit when returning from Handler mode to Thread mode: 0 = Do not sleep when returning to Thread mode. 1 = Enter sleep or deep sleep when returning from an ISR to Thread mode. Setting this bit to 1 enables an interrupt driven application to avoid returning to an empty main application.
[0]	-	**Reserved**

System Handler Priority Register 2 (SHPR2)

Register	Offset	R/W	Description	Reset Value
SHPR2	SCS_BA+0xD1C	R/W	System Handler Priority Register 2	0x0000_0000

31	30	29	28	27	26	25	24
PRI_11		-					
23	**22**	**21**	**20**	**19**	**18**	**17**	**16**
-							
15	**14**	**13**	**12**	**11**	**10**	**9**	**8**
-							
7	**6**	**5**	**4**	**3**	**2**	**1**	**0**
-							

Bits	Description	
[31:30]	**PRI_11[1:0]**	**Priority of System Handler 11 – SVCall** "0" denotes the highest priority and "3" denotes the lowest priority.
[29:0]	-	**Reserved**

System Handler Priority Register 3 (SHPR3)

Register	Offset	R/W	Description	Reset Value
SHPR3	SCS_BA+0xD20	R/W	System Handler Priority Register 3	0x0000_0000

31	30	29	28	27	26	25	24
PRI_15		**-**					
23	**22**	**21**	**20**	**19**	**18**	**17**	**16**
PRI_14		**-**					
15	**14**	**13**	**12**	**11**	**10**	**9**	**8**
-							
7	**6**	**5**	**4**	**3**	**2**	**1**	**0**
-							

Bits	Description	
[31:30]	**PRI_15[1:0]**	**Priority of System Handler 15 – SysTick** "0" denotes the highest priority and "3" denotes the lowest priority.
[29:24]	**-**	**Reserved**
[23:22]	**PRI_14[1:0]**	**Priority of System Handler 14 – PendSV** "0" denotes the highest priority and "3" denotes the lowest priority.
[21:0]	**-**	**Reserved**

7 APPLICATION CIRCUIT

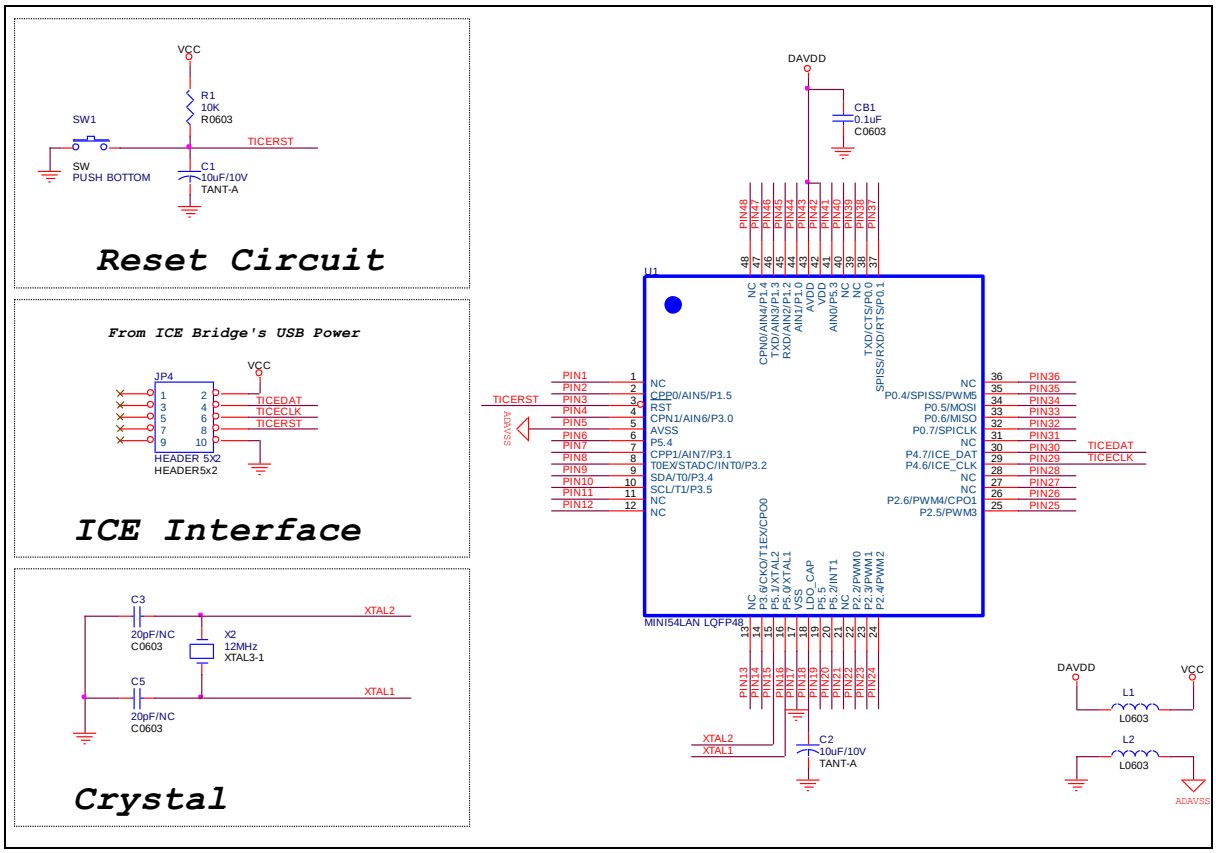

8 ELECTRICAL CHARACTERISTICS

8.1 Absolute Maximum Ratings

SYMBOL	PARAMETER	Min	MAX	UNIT
DC power supply	V_{DD}–V_{SS}	-0.3	+7.0	V
Input voltage	VIN	V_{SS}-0.3	V_{DD}+0.3	V
Oscillator frequency	$1/t_{CLCL}$	4	24	MHz
Operating temperature	TA	-40	+85	°C
Storage temperature	TST	-55	+150	°C
Maximum current into VDD		-	120	mA
Maximum current out of VSS			120	mA
Maximum current sunk by a I/O pin			35	mA
Maximum current sourced by a I/O pin			35	mA
Maximum current sunk by total I/O pins			100	mA
Maximum current sourced by total I/O pins			100	mA

Note: Exposure to conditions beyond those listed under absolute maximum ratings may adversely affects the lift and reliability of the device.

8.2 DC Electrical Characteristics

(VDD-VSS = 5.0 V, TA = 25°C, FOSC = 24 MHz unless otherwise specified.)

PARAMETER	Sym.	Specification				TEST CONDITIONS
		Min.	TYP.	Max.	Unit	
Operation voltage	V_{DD}	2.5		5.5	V	V_{DD} = 2.5 V ~ 5.5 V up to 24 MHz
V_{DD} rise rate to ensure internal operation correctly	V_{RISE}	0.05			V/mS	
Power ground	V_{SS} AV_{SS}	-0.3			V	
LDO output voltage	V_{LDO}	-10%	1.8	+10%	V	V_{DD} = 2.5V ~ 5.5V
Analog operating voltage	AV_{DD}	0		V_{DD}	V	
Operating current Normal run mode at 24 MHz	I_{DD1}		9.5		mA	V_{DD} = 5.5V at 24 MHz, all IP Enabled
	I_{DD2}		7.5		mA	V_{DD} = 5.5V at 24 MHz, all IP Disabled
	I_{DD3}		7.5		mA	V_{DD} = 3.3V at 24 MHz, all IP Enabled
	I_{DD4}		6		mA	V_{DD} = 3.3V at 24 MHz, all IP Disabled
Operating current Normal run mode at 12 MHz	I_{DD5}		5.5		mA	V_{DD} = 5.5V at 12 MHz, all IP Enabled
	I_{DD6}		4.5		mA	V_{DD} = 5.5V at 12 MHz, all IP Disabled
	I_{DD7}		4		mA	V_{DD} = 3.3V at 12 MHz, all IP Enabled
	I_{DD8}		3		mA	V_{DD} = 3.3V at 12 MHz, all IP Disabled
Operating current Normal run mode at 4 MHz	I_{DD9}		3.6		mA	V_{DD} = 5.5V at 4 MHz, all IP Enabled
	I_{DD10}		3.3		mA	V_{DD} = 5.5V at 4 MHz, all IP Disabled
	I_{DD11}		1.7		mA	V_{DD} = 3.3V at 4 MHz, all IP Enabled
	I_{DD12}		1.4		mA	V_{DD} = 3.3V at 4 MHz, all IP Disabled
Operating current Normal run mode at 22.1184 MHz IRC	I_{DD13}		6.6		mA	V_{DD} = 5.5V at 22.1184 MHz, all IP Enabled
	I_{DD14}		5		mA	V_{DD} = 5.5V at 22.1184 MHz, all IP Disabled
	I_{DD15}		6.6		mA	V_{DD} = 3.3V at 22.1184 MHz, all IP Enabled
	I_{DD16}		5		mA	V_{DD} = 3.3V at 22.1184 MHz, all IP Disabled

PARAMETER	Sym.	Specification				TEST CONDITIONS
		Min.	TYP.	Max.	Unit	
Operating current Normal run mode at 32.768 KHz crystal oscillator	I_{DD17}		116		μA	V_{DD} = 5.5V at 32.768 KHz, all IP Enabled
	I_{DD18}		113		μA	V_{DD} = 5.5V at 32.768 KHz, all IP Disabled
	I_{DD19}		112		μA	V_{DD} = 3.3V at 32.768 KHz, all IP Enabled
	I_{DD20}		100		μA	V_{DD} = 3.3V at 32.768 KHz, all IP Disabled
Operating current Normal run mode at 10 KHz IRC	I_{DD21}		109		μA	V_{DD} = 5.5V at 10 KHz, all IP Enabled
	I_{DD22}		108		μA	V_{DD} = 5.5V at 10 KHz, all IP Disabled
	I_{DD23}		100		μA	V_{DD} = 3.3V at 10 KHz, all IP Enabled
	I_{DD24}		98		μA	V_{DD} = 3.3V at 10 KHz, all IP Disabled
Operating current Idle mode at 24 MHz	I_{IDLE1}		5.5		mA	V_{DD} = 5.5V at 24 MHz, all IP Enabled
	I_{IDLE2}		3.5		mA	V_{DD} = 5.5V at 24 MHz, all IP Disabled
	I_{IDLE3}		3.8		mA	V_{DD} = 3.3V at 24 MHz, all IP Enabled
	I_{IDLE4}		1.8		mA	V_{DD} = 3.3V at 24 MHz, all IP Disabled
Operating current Idle mode at 12 MHz	I_{IDLE5}		3.3		mA	V_{DD} = 5.5V at 12 MHz, all IP Enabled
	I_{IDLE6}		2.6		mA	V_{DD} = 5.5V at 12 MHz, all IP Disabled
	I_{IDLE7}		2		mA	V_{DD} = 3.3V at 12 MHz, all IP Enabled
	I_{IDLE8}		1		mA	V_{DD} = 3.3V at 12 MHz, all IP Disabled
Operating current Idle mode at 4 MHz	I_{IDLE9}		3		mA	V_{DD} = 5.5V at 4 MHz, all IP Enabled
	I_{IDLE10}		2.3		mA	V_{DD} = 5.5V at 4 MHz, all IP Disabled
	I_{IDLE11}		1		mA	V_{DD} = 3.3V at 4 MHz, all IP Enabled
	I_{IDLE12}		0.7		mA	V_{DD} = 3.3V at 4 MHz, all IP Disabled
Operating current Idle mode at 22.1184 MHz IRC	I_{IDLE13}		3.0		mA	V_{DD} = 5.5V at 22.1184 MHz, all IP Enabled
	I_{IDLE14}		1.2		mA	V_{DD} = 5.5V at 22.1184 MHz, all IP Disabled
	I_{IDLE15}		3.0		mA	V_{DD} = 3.3V at 22.1184 MHz, all IP Enabled

PARAMETER	Sym.	Specification				TEST CONDITIONS
		Min.	TYP.	Max.	Unit	
	I_{IDLE16}		1.2		mA	V_{DD} = 3.3V at 22.1184 MHz, all IP Disabled
Operating current Idle mode at 32.768 KHz crystal oscillator	I_{IDLE17}		110		μA	V_{DD} = 5.5V at 32.768 KHz, all IP Enabled
	I_{IDLE18}		107		μA	V_{DD} = 5.5V at 32.768 KHz, all IP Disabled
	I_{IDLE19}		105		μA	V_{DD} = 3.3V at 32.768 KHz, all IP Enabled
	I_{IDLE20}		102		μA	V_{DD} = 3.3V at 32.768 KHz, all IP Disabled
Operating current Idle mode at 10 KHz IRC	I_{IDLE21}		103		μA	V_{DD} = 5.5V at 10 KHz, all IP Enabled
	I_{IDLE22}		102		μA	V_{DD} = 5.5V at 10 KHz, all IP Disabled
	I_{IDLE23}		96		μA	V_{DD} = 3.3V at 10 KHz, all IP Enabled
	I_{IDLE24}		95		μA	V_{DD} = 3.3V at 10 KHz, all IP Disabled
Standby current Power-down mode	I_{PWD1}		10		μA	V_{DD} = 5.0V, CPU STOP All IP and Clock OFF
	I_{PWD2}		5		μA	V_{DD} = 3.3V, CPU STOP All IP and Clock OFF
Standby current Power-down mode with 32.768 KHz crystal enabled	I_{PWD3}		12		μA	V_{DD} = 5.0V, CPU STOP All IP and Clock OFF except 32.768KHz crystal oscillator
	I_{PWD4}		7		μA	V_{DD} = 3.3V, CPU STOP All IP and Clock OFF except 32.768KHz crystal oscillator
Input current P0~P5 (Quasi-bidirectional mode)	I_{IN1}		-50	-60	μA	V_{DD} = 5.5 V, V_{IN} = 0 V or V_{IN} = V_{DD}
Input current at /RESET[1]	I_{IN2}	-55	-45	-30	μA	V_{DD} = 3.3 V, V_{IN} = 0.45 V
Input leakage current PA, PB, PC, PD, PE	I_{LK}	-0.1	-	+0.1	μA	V_{DD} = 5.5 V, 0<V_{IN}<V_{DD}
Logic 1 to 0 transition current PA~PE (Quasi-bidirectional mode)	I_{TL} [3]	-650	-	-200	μA	V_{DD} = 5.5 V, V_{IN}<2.0 V
Input low voltage	V_{IL1}	-0.3	-	0.8	V	V_{DD} = 4.5 V

PARAMETER	Sym.	Specification				TEST CONDITIONS
		Min.	TYP.	Max.	Unit	
P0~P5 (TTL input)		-0.3	-	0.6		V_{DD} = 2.5 V
Input high voltage P0~P5 (TTL input)	V_{IH1}	2.0	-	V_{DD} +0.2	V	V_{DD} = 5.5V
		1.5	-	V_{DD} +0.2		V_{DD} = 3.0V
Input low voltage P0~P5, (Schmitt input)	V_{IL2}		0.4 V_{DD}		V	
Input high voltage P0~P5, (Schmitt input)	V_{IH2}		0.6 V_{DD}		V	
Hysteresis voltage of P0~P5 (Schmitt input)	V_{HY}		0.2 V_{DD}		V	
Input low voltage XTAL1[*2]	V_{IL3}	0	-	0.8	V	V_{DD} = 4.5V
		0	-	0.4		V_{DD} = 3.0V
Input high voltage XTAL1[*2]	V_{IH3}	3.5	-	V_{DD} +0.2	V	V_{DD} = 5.5V
		2.4	-	V_{DD} +0.2		V_{DD} = 3.0V
Internal /RESET pin pull-up resistor	R_{RST}	40	-	100	KΩ	
Negative going threshold (Schmitt input), /RESET	V_{ILS}	-0.5	-	0.3 V_{DD}	V	
Positive going threshold (Schmitt input), /RESET	V_{IHS}	0.6 V_{DD}	-	V_{DD}+0.5	V	
Source current P0~P5. (Quasi-bidirectional mode)	I_{SR11}	-300	-370	-450	μA	V_{DD} = 4.5V, V_S = 2.4V
	I_{SR12}	-50	-70	-90	μA	V_{DD} = 2.7V, V_S = 2.2V
	I_{SR12}	-40	-60	-80	μA	V_{DD} = 2.5V, V_S = 2.0V
Source current P0~P5, (Push-pull mode)	I_{SR21}	-20	-24	-28	mA	V_{DD} = 4.5V, V_S = 2.4V
	I_{SR22}	-4	-6	-8	mA	V_{DD} = 2.7V, V_S = 2.2V
	I_{SR22}	-3	-5	-7	mA	V_{DD} = 2.5V, V_S = 2.0V
Sink current P0~P5, (Quasi-bidirectional and Push-pull mode)	I_{SK1}	10	16	20	mA	V_{DD} = 4.5V, V_S = 0.45V
	I_{SK1}	7	10	13	mA	V_{DD} = 2.7V, V_S = 0.45V
	I_{SK1}	6	9	12	mA	V_{DD} = 2.5V, V_S = 0.45V

Notes:

1. /RESET pin is a Schmitt trigger input.

2. Crystal Input is a CMOS input.
3. Pins of P0~P5 can source a transition current when they are being externally driven from 1 to 0. In the condition of V_{DD}=5.5V, the transition current reaches its maximum value when V_{IN} approximates to 2V.

8.3 AC Electrical Characteristics

8.3.1 External Input Clock

PARAMETER	Sym.	Specification				TEST CONDITIONS
		Min.	TYP.	Max.	Unit	
Clock high time	t_{CHCX}	20			nS	
Clock low time	t_{CLCX}	20			nS	
Clock rise time	t_{CLCH}			10	nS	
Clock fall time	t_{CHCL}			10	nS	

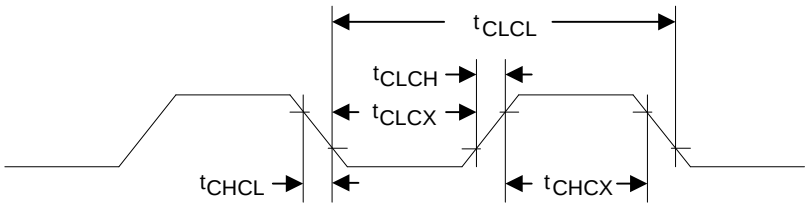

Note: Duty cycle is 50%.

8.3.2 External 4 ~ 24 MHz XTAL Oscillator

PARAMETER	Sym.	Specification				TEST CONDITIONS
		Min.	TYP.	Max.	Unit	
Oscillator frequency	f_{HXTAL}	4	12	24	MHz	V_{DD} = 2.5V ~ 5.5V
Temperature	T_{HXTAL}	-40		+85	^{o}C	
Operating current	I_{HXTAL}		TBD		mA	V_{DD} = 5.0V

8.3.3 Typical Crystal Application Circuit

CRYSTAL	C1	C2
4 MHz ~ 24 MHz	Optional (depending on crystal specification)	

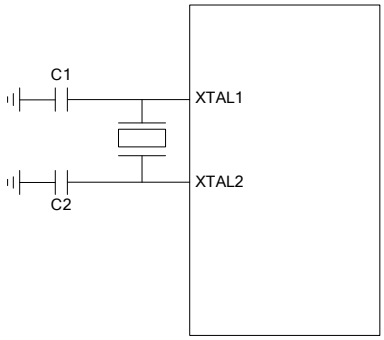

Figure 8.3-1 Typical Crystal Application Circuit

8.3.4 External 32.768 KHz XTAL Oscillator

PARAMETER	Sym.	Specification				TEST CONDITIONS
		Min.	TYP.	Max.	Unit	
Oscillator frequency	fL_{XTAL}		32.768		KHz	V_{DD} = 2.5V ~ 5.5V
Temperature	TL_{XTAL}	-40		+85	^{o}C	
Operating current	I_{HXTAL}		TBD		μA	V_{DD} = 5.0V

8.3.5 Internal 22.1184 MHz RC Oscillator

PARAMETER	Sym.	Specification				TEST CONDITIONS
		Min.	TYP.	Max.	Unit	
Supply voltage[1]	V_{HRC}		1.8		V	
Center frequency	F_{HRC}	21.89	22.1184	22.34	MHz	25°C, V_{DD} = 5V
		20.57	22.1184	23.23	MHz	-40°C~+85 ^{o}C, V_{DD} = 2.5V~5.5V
		21.78	22.0	22.22	MHz	-40°C~+85 ^{o}C, V_{DD} = 2.5V~5.5V 32.768K crystal oscillator Enabled and TRIM_SEL = 1
Operating current	I_{HRC}		TBD		mA	

Note: Internal operation voltage comes from LDO.

8.3.6 Internal 10 KHz RC Oscillator

PARAMETER	Sym.	Specification				TEST CONDITIONS
		Min.	TYP.	Max.	Unit	
Supply voltage[1]	V_{LRC}		1.8		V	
Center frequency	F_{LRC}	7	10	13	KHz	25°C, V_{DD} = 5V
		5	10	15	KHz	-40°C = ~+85 °C, V_{DD} = 2.5V~5.5V
Operating current	I_{LRC}		TBD		μA	V_{DD} = 5V

Note: Internal operation voltage comes from LDO.

8.4 Analog Characteristics

(V_{DD}-V_{SS} = 5.0V, TA = 25°C, FOSC = 24 MHz unless otherwise specified.)

8.4.1 Brown-Out Reset (BOD)

PARAMETER	Sym.	Specification				TEST CONDITIONS
		Min.	TYP.	Max.	Unit	
Operating voltage	V_{BOD}	2.0		5.5	V	
Operating current	I_{BOD}		5	15	μA	V_{DD} = 5V BOD27 and BOD38 Enabled
BOD38 detection level	V_{B38dt}	3.6	3.8	4.0	V	25°C
BOD27 detection level	V_{B27dt}	2.6	2.7	2.8	V	25°C

8.4.2 Low Voltage Reset (LVR)

PARAMETER	Sym.	Specification				TEST CONDITIONS
		Min.	TYP.	Max.	Unit	
Operating voltage	V_{BOD}	2.0		5.5	V	
Operating current	I_{BOD}		1	2	μA	
Detection level	V_{LVR}		2.0		V	25°C
LVR always enabled		1.6	2.0	2.4	V	-40°C ~ +85°C

8.4.3 Analog Comparator

PARAMETER	Sym.	Specification				TEST CONDITIONS
		Min.	TYP.	Max.	Unit	
Operating voltage	V_{BOD}	2.5	3.3	5.5	V	
Operating current	I_{CMP}		40	80	μA	
Input offset voltage	V_{OFFSET}		10	20	mV	
Output swing voltage	V_{swin}	0.2		V_{DD}-0.2	V	
Input common mode range (V_{CM})	V_{CM}	0.1		V_{DD}-0.1	V	
DC gain	G_{DC}		70		dB	
Propagation delay	T_{PDLY}		200		ns	V_{CM} = 1.2V The difference voltage in CPPx and CPNx is 0.1V
Hysteresis	V_{HYS}		±10		mV	One bit control W/O and W. hysteresis @V_{CM} = 0.2V ~ VDD-0.2V

PARAMETER	Sym.	Specification				TEST CONDITIONS
		Min.	TYP.	Max.	Unit	
Stable time	T_{STBL}			2	μS	CPPx = 1.3V and CPNX = 1.2V

8.4.4 Analog Comparator Reference Voltage (CRV)

PARAMETER	Sym.	Specification				TEST CONDITIONS
		Min.	TYP.	Max.	Unit	
Operating voltage	V_{BOD}	2.5		5.5	V	
CRV step size	V_{STEP}		$V_{DD}/24$		V	VDD = 5V, BOD27 and BOD38 Enabled
CRV output voltage absolute accuracy	A_{CRV}	-5		+5	%	
Unit resistor value	R_{CRV}		2K		ohm	

8.4.5 10-bit ADC

PARAMETER	Sym.	Specification				TEST CONDITIONS
		Min.	TYP.	Max.	Unit	
Operating voltage	AV_{DD}	2.7		5.5	V	$AV_{DD} = V_{DD}$
Operating current	I_{ADC}			1	mA	$AV_{DD} = V_{DD} = 5V$, $F_{SPS} = 150K$
Resolution	R_{ADC}			10	bit	
Reference voltage	V_{REF}		A_{VDD}		V	V_{REF} connected to A_{VDD} in chip
ADC input voltage	V_{IN}	0		V_{REF}	V	
Conversion time	T_{CONV}	6.7			μS	
Sampling rate	F_{SPS}	150K			Hz	V_{DD} = 5V, ADC clock = 6MHz Free running conversion
Integral non-linearity error (INL)	INL			±1	LSB	
Differential non-linearity (DNL)	DNL			±1	LSB	
Gain error	E_G			±2	LSB	
Offset error	E_{OFFSET}			3	LSB	
Absolute error	E_{ABS}			4	LSB	
ADC clock frequency	F_{ADC}	5K		6M	Hz	V_{DD} = 5V
Clock cycle	AD_{CYC}	38			Cycle	

PARAMETER	Sym.	Specification				TEST CONDITIONS
		Min.	TYP.	Max.	Unit	
Bang-gap voltage	V_{BG}	1.27	1.35	1.44	V	-40°C ~ +85°C

8.4.6 Flash Memory Characteristics

PARAMETER	Sym.	Specification				TEST CONDITIONS
		Min.	TYP.	Max.	Unit	
Cycling (erase/write) Program memory	N_{CYC}	100			K cycle	
Data retention	T_{RET}	10			years	T_A = +85°C
Erase time of ISP mode	T_{ERASE}	2.3	2.5	2.7	mS	Erase time for one page
Program time of ISP mode	T_{PROG}	57	62	67	μS	Programming time for one word
Program current	I_{PROG}		3.3		mA	V_{DD} = 5.5V

9 PACKAGE DIMENSION

9.1 48-pin LQFP

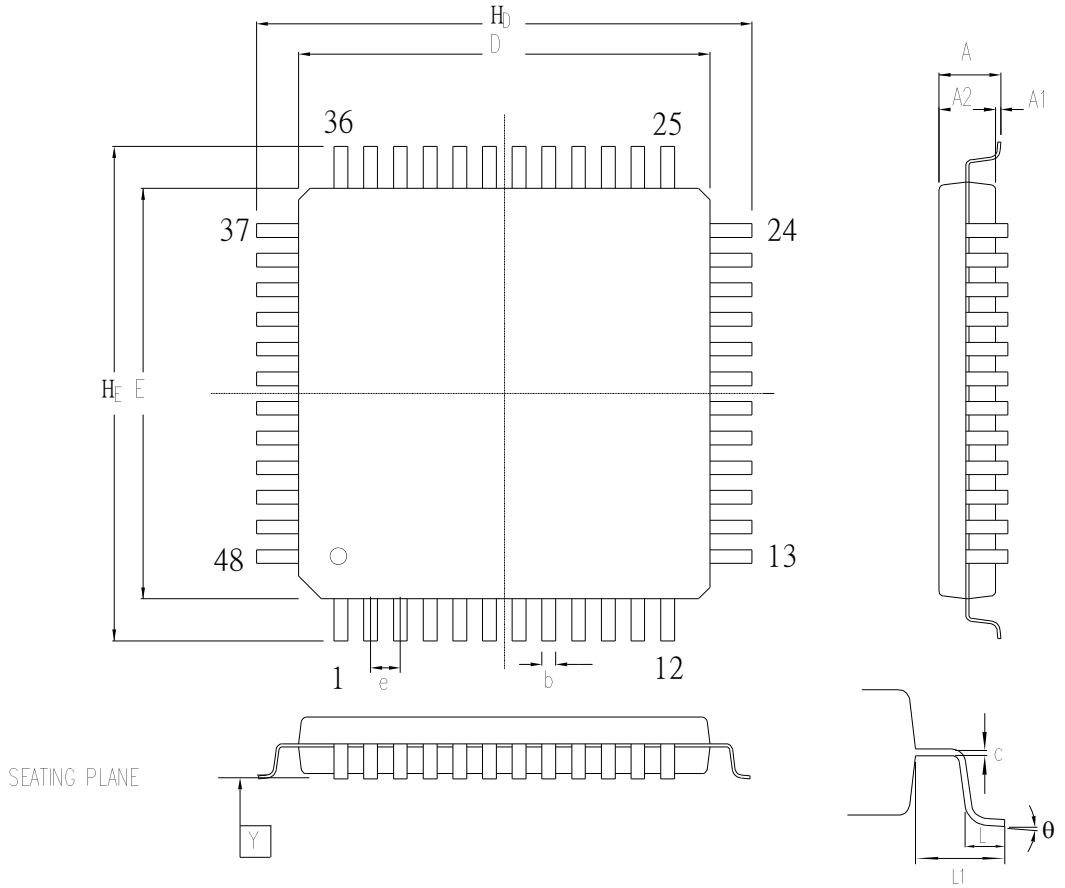

Controlling dimension : Millimeters

Symbol	Dimension in inch			Dimension in mm		
	Min	Nom	Max	Min	Nom	Max
A	—	—	—	—	—	—
A_1	0.002	0.004	0.006	0.05	0.10	0.15
A_2	0.053	0.055	0.057	1.35	1.40	1.45
b	0.006	0.008	0.010	0.15	0.20	0.25
c	0.004	0.006	0.008	0.10	0.15	0.20
D	0.272	0.276	0.280	6.90	7.00	7.10
E	0.272	0.276	0.280	6.90	7.00	7.10
e	0.014	0.020	0.026	0.35	0.50	0.65
H_D	0.350	0.354	0.358	8.90	9.00	9.10
H_E	0.350	0.354	0.358	8.90	9.00	9.10
L	0.018	0.024	0.030	0.45	0.60	0.75
L_1	—	0.039	—	—	1.00	—
Y	—	—	0.004	—	—	0.10
θ	0	—	7	0	—	7

9.2 33-pin QFN (4mm x 4mm)

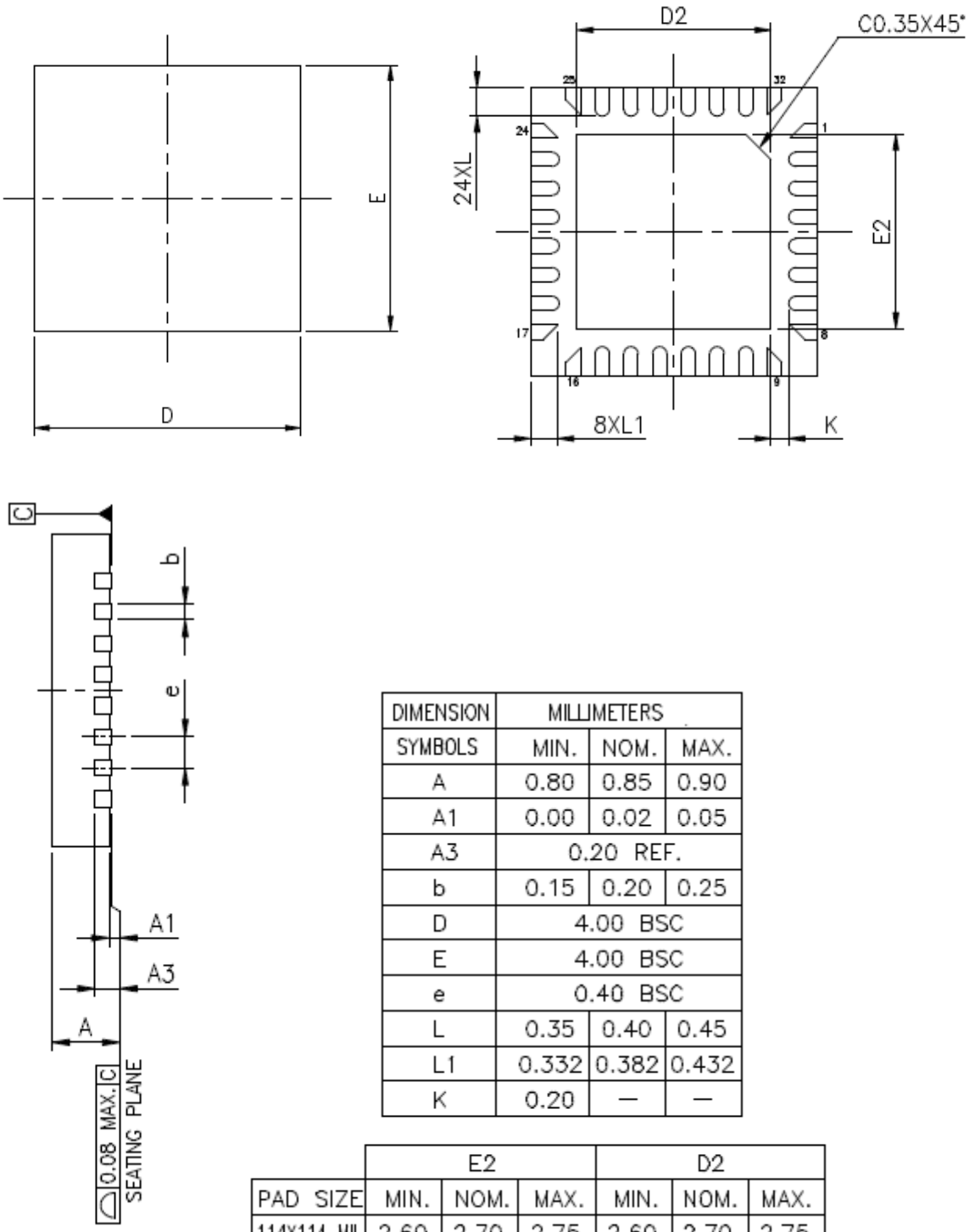

DIMENSION	MILLIMETERS		
SYMBOLS	MIN.	NOM.	MAX.
A	0.80	0.85	0.90
A1	0.00	0.02	0.05
A3	0.20 REF.		
b	0.15	0.20	0.25
D	4.00 BSC		
E	4.00 BSC		
e	0.40 BSC		
L	0.35	0.40	0.45
L1	0.332	0.382	0.432
K	0.20	—	—

	E2			D2		
PAD SIZE	MIN.	NOM.	MAX.	MIN.	NOM.	MAX.
114X114 MIL	2.60	2.70	2.75	2.60	2.70	2.75

9.3 33-pin QFN (5mm x 5mm)

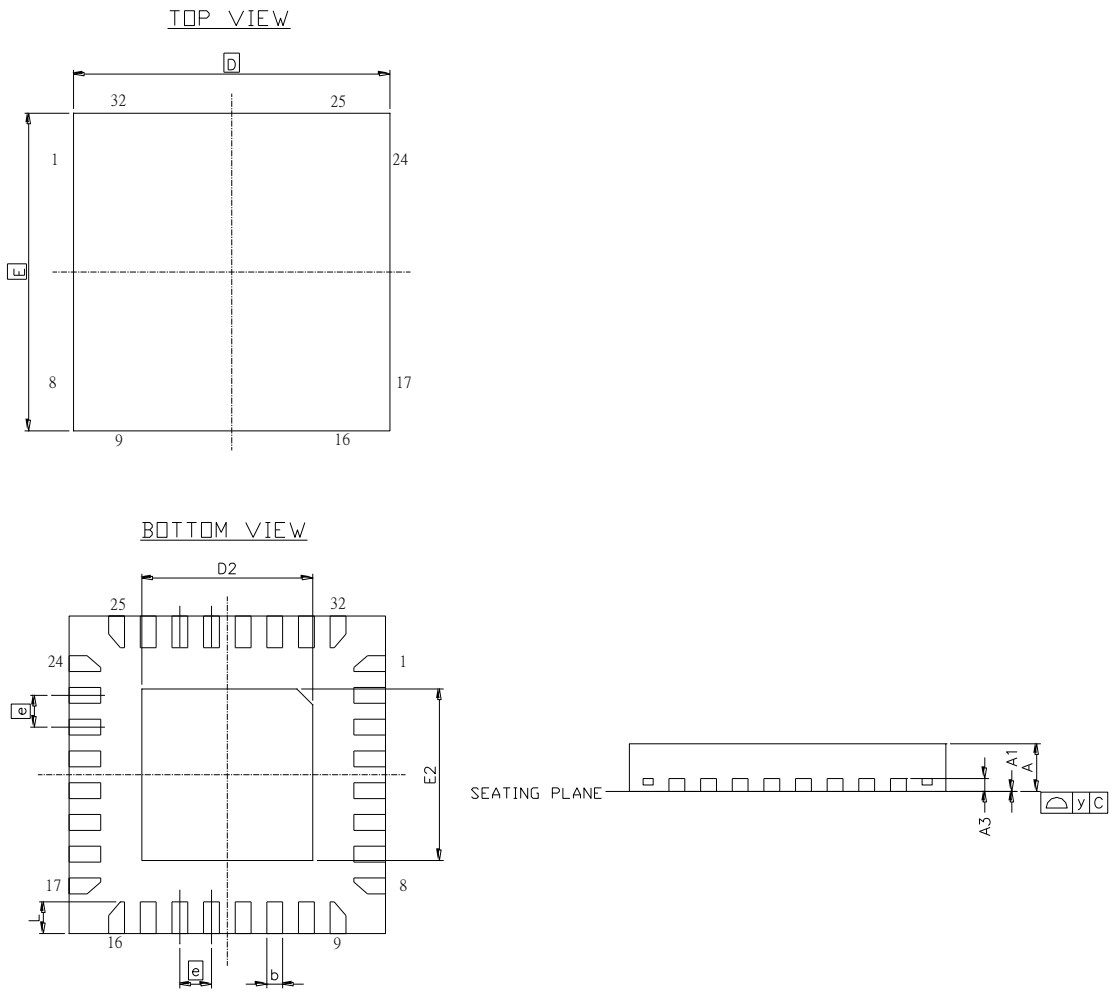

SYMBOL	DIMENSION (MM)			DIMENSION (INCH)		
	MIN.	NOM.	MAX.	MIN.	NOM.	MAX.
A	0.70	0.75	0.80	0.0275	0.0295	0.0315
A1	0	0.02	0.05	0	0.001	0.002
A3	0.20 REF			0.008 REF		
b	0.18	0.25	0.30	0.007	0.010	0.012
D	5.00 BSC			0.197 BSC		
E	5.00 BSC			0.197 BSC		
e	0.50 BSC			0.0197 BSC		
L	0.30	0.40	0.50	0.012	0.016	0.020
y	0.10			0.0039		

SYMBOL	D2			E2		
	MIN.	NOM.	MAX.	MIN.	NOM.	MAX.
DIMENSION (MM)	3.4	3.5	3.6	3.4	3.5	3.6

10 REVISION HISTORY

Date	Revision	Changes
Sep 6, 2011	1.00	Initial release
Oct 20, 2011	1.01	1. Changed electrical characteristics of comparator, 22 MHz RC oscillator, ADC and band-gap. 2. Added electrical characteristics of Flash memory. 3. Changed maximum SPI frequency as 12MHz. 4. Added more description about ADC channel enable register (ADCHER). 5. Modified the block diagram of timer controller. 6. Modified the description of timer capture mode. 7. Fixed some typos.
Dec 1, 2011	1.02	1. Fixed electrical characteristics of 22 MHz RC oscillator. 2. Modified all “1XX” description in registers and related figures. 3. Updated “Figure 5.10-18: Motor Control PWM Architecture”. 4. Updated “Figure 5.10-17: Initial State and Polarity Control with Rising Edge Dead-zone Insertion”. 5. Revised the TIF (bit 0 TISR register) description. 6. Changed the SYST_CSR reset value from “0x0000_0004” to “0x0000_0000”. 7. Modified 33-pin QFN 5mm x 5mm package outline specification. 8. Fixed some typos.
Feb 9, 2012	1.03	1. Added the VDD rise rate specification. 2. Revised the minimum ADC clock frequency specification. 3. Revised the minimum and maximum specification of band-gap voltage. 4. Added a note about only even channels (PWM0, PWM2 and PWM4) can be set as inverter bit (CHnINV, n = 0, 2, 4) in independent mode. 5. Modified the diagram in the LEV_RTS (bit 9 of UA_MCR register) description. 6. Added the CFGUEN and LDUEN bit description in the ISP Control Register (ISPCON) section.

Important Notice

Nuvoton Products are neither intended nor warranted for usage in systems or equipment, any malfunction or failure of which may cause loss of human life, bodily injury or severe property damage. Such applications are deemed, "Insecure Usage".

Insecure usage includes, but is not limited to: equipment for surgical implementation, atomic energy control instruments, airplane or spaceship instruments, the control or operation of dynamic, brake or safety systems designed for vehicular use, traffic signal instruments, all types of safety devices, and other applications intended to support or sustain life.

All Insecure Usage shall be made at customer's risk, and in the event that third parties lay claims to Nuvoton as a result of customer's Insecure Usage, customer shall indemnify the damages and liabilities thus incurred by Nuvoton.

Please note that all data and specifications are subject to change without notice.
All the trademarks of products and companies mentioned in this datasheet belong to their respective owners.