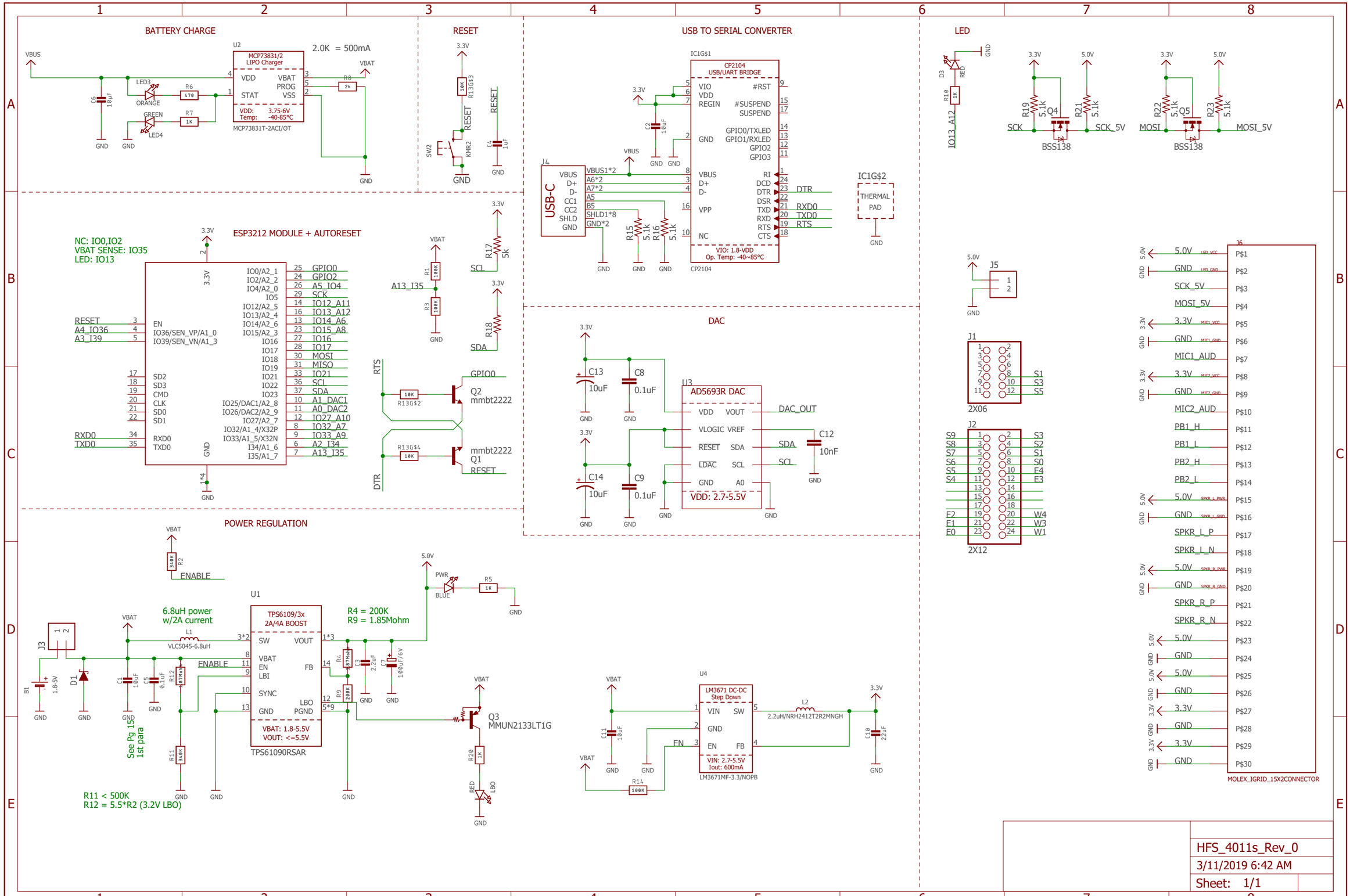
BATTERY CHARGE
U2
MCP73831/2
LIPO Charger
VDD
STAT
VBAT
PROG
VSS
VDD: 3.75-6V
Temp: -40-85°C
MCP73831T-2ACI/OT
2.0K = 500mA
VBUS
VBAT
LED3
ORANGE
GREEN
LED4
R6 470
R7 1K
R8 2k
C6 10uF
GND
RESET
3.3V
R13G$3 10K
RESET
SW2
KMR2
C4 1uF
USB TO SERIAL CONVERTER
IC1G$1
CP2104
USB/UART BRIDGE
VIO
VDD
REGIN
#RST
#SUSPEND
SUSPEND
GPIO0/TXLED
GPIO1/RXLED
GPIO2
GPIO3
GND
VBUS
D+
D-
VPP
NC
RI
DCD
DTR
DSR
TXD
RXD
RTS
CTS
VIO: 1.8-VDD
Op. Temp: -40~85°C
CP2104
C2 10uF
J4
USB-C
VBUS
D+
D-
CC1
CC2
SHLD
GND
VBUS1*2
A6*2
A7*2
A5
B5
SHLD1*8
GND*2
R15 5.1k
R16 5.1k
DTR
RXD0
TXD0
RTS
IC1G$2
THERMAL
PAD
LED
D3
RED
R10 1K
IO13_A12
3.3V
5.0V
R19 5.1k
Q4
R21 5.1k
SCK
SCK_5V
BSS138
R22 5.1k
Q5
R23 5.1k
MOSI
MOSI_5V
ESP3212 MODULE + AUTORESET
NC: IO0,IO2
VBAT SENSE: IO35
LED: IO13
EN
IO36/SEN_VP/A1_0
IO39/SEN_VN/A1_3
RESET
A4_I36
A3_I39
SD2
SD3
CMD
CLK
SD0
SD1
RXD0
TXD0
IO0/A2_1
IO2/A2_2
IO4/A2_0
IO5
IO12/A2_5
IO13/A2_4
IO14/A2_6
IO15/A2_3
IO16
IO17
IO18
IO19
IO21
IO22
IO23
IO25/DAC1/A2_8
IO26/DAC2/A2_9
IO27/A2_7
IO32/A1_4/X32P
IO33/A1_5/X32N
I34/A1_6
I35/A1_7
GPIO0
GPIO2
A5_IO4
SCK
IO12_A11
IO13_A12
IO14_A6
IO15_A8
IO16
IO17
MOSI
MISO
IO21
SCL
SDA
A1_DAC1
A0_DAC2
IO27_A10
IO32_A7
IO33_A9
A2_I34
A13_I35
R1 100K
R3 100K
A13_I35
R17 5k
R18
SCL
SDA
RTS
DTR
R13G$2 10K
R13G$4 10K
Q2
mmbt2222
Q1
RESET
DAC
U3
AD5693R DAC
VDD
VOUT
VLOGIC
VREF
RESET
SDA
LDAC
SCL
GND
A0
VDD: 2.7-5.5V
DAC_OUT
C12 10nF
C13 10uF
C8 0.1uF
C14 10uF
C9 0.1uF
J5
J1
2X06
S1
S3
S5
J2
2X12
S9
S8
S7
S6
S5
S4
F2
F1
F0
S3
S2
S1
S0
F4
F3
W4
W3
W1
J6
MOLEX_IGRID_15X2CONNECTOR
5.0V
GND
SCK_5V
MOSI_5V
3.3V
MIC1_AUD
MIC2_AUD
PB1_H
PB1_L
PB2_H
PB2_L
SPKR_L_P
SPKR_L_N
SPKR_R_P
SPKR_R_N
POWER REGULATION
R2 340K
ENABLE
U1
TPS6109/3x
2A/4A BOOST
SW
VOUT
VBAT
EN
LBI
FB
SYNC
GND
LBO
PGND
VBAT: 1.8-5.5V
VOUT: <=5.5V
TPS61090RSAR
6.8uH power
w/2A current
L1
VLC5045-6.8uH
R4 = 200K
R9 = 1.85Mohm
R4 187kohm
R9 200K
C3 2.2uF
C7 100uF/6V
PWR
BLUE
R5 1K
J3
B1
1.8-5V
D1
C1 10uF
C5 0.1uF
R12 187kohm
R11 340K
See Pg 15
1st para
R11 < 500K
R12 = 5.5*R2 (3.2V LBO)
Q3
MMUN2133LT1G
R20 1K
RED
LBO
U4
LM3671 DC-DC
Step Down
VIN
SW
GND
EN
FB
VIN: 2.7-5.5V
Iout: 600mA
LM3671MF-3.3/NOPB
L2
2.2uH/NRH2412T2R2MNGH
C11 10uF
C10 22uF
R14 100K
HFS_4011s_Rev_0
3/11/2019 6:42 AM
Sheet: 1/1