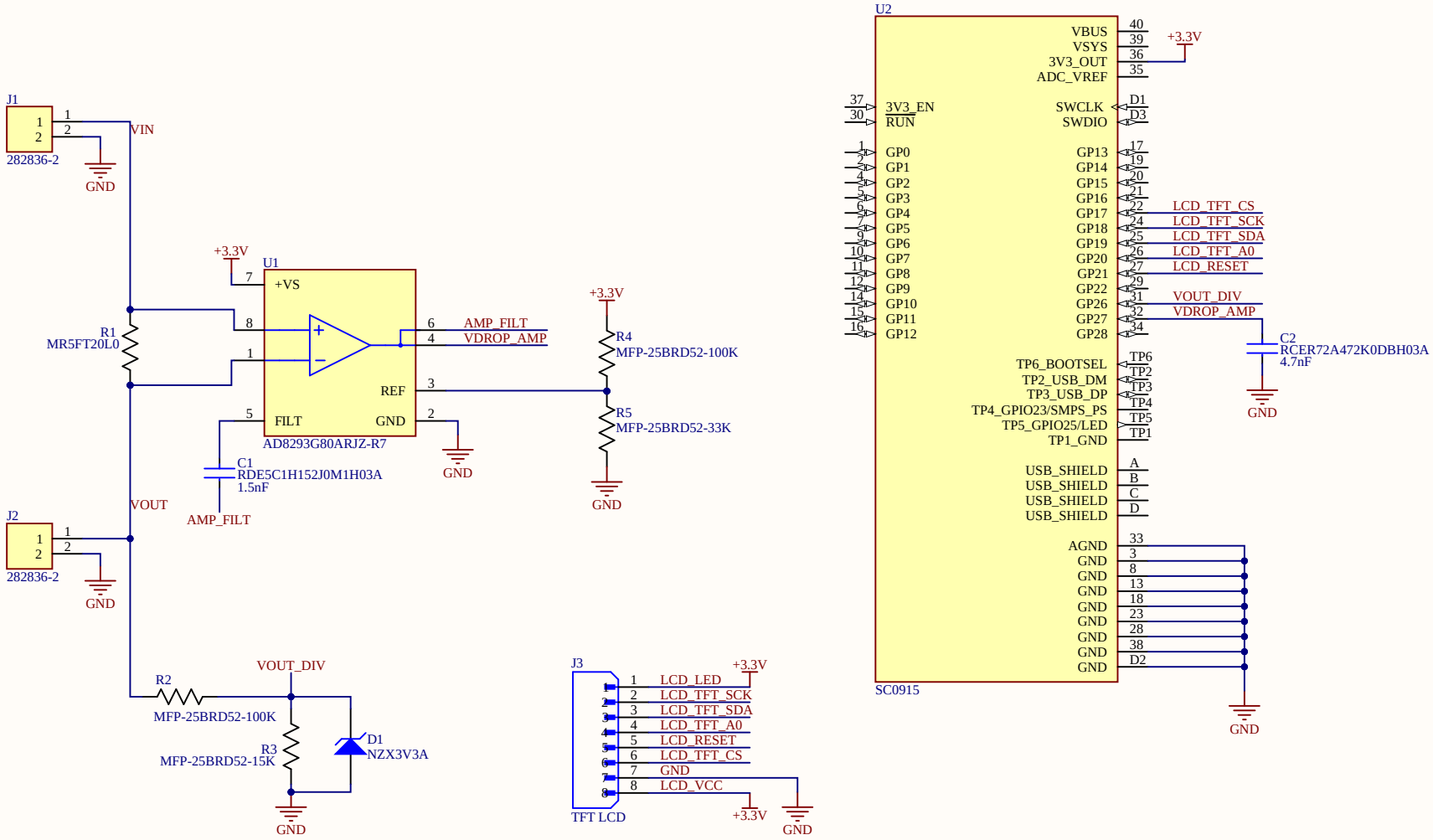

Title		
Power Meter		
Size: A4	Number	Revision
Date: 12/28/2022	Sheet 1 of 1	
File: H:\.shortcut-targets-by-id\..\Power_Meter.SchDoc	Drawn By: Joe Dai	