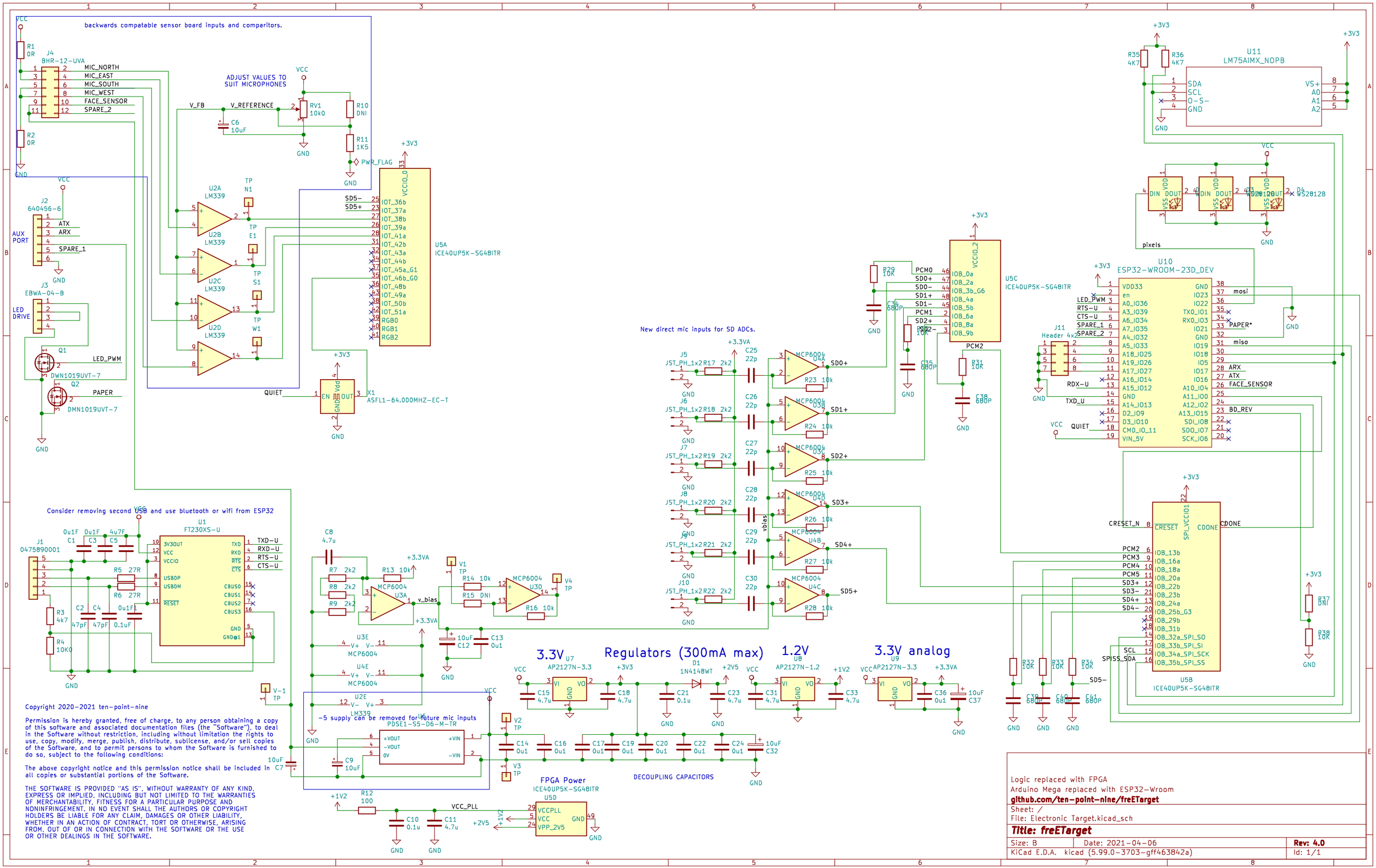
backwards compatable sensor board inputs and comparitors.
J4
BHR-12-UVA
MIC_NORTH
MIC_EAST
MIC_SOUTH
MIC_WEST
FACE_SENSOR
SPARE_2
ADJUST VALUES TO SUIT MICROPHONES
RV1 10k0
R10 DNI
R11 1K5
PWR_FLAG
V_FB
V_REFERENCE
C6 10uF
U2A LM339
U2B LM339
U2C LM339
U2D LM339
TP N1
TP E1
TP S1
TP W1
J2 640456-6
AUX PORT
ATX
ARX
SPARE_1
J3 EBWA-04-B
LED DRIVE
Q1 DWN1019UVT-7
Q2 DMN1019UVT-7
LED_PWM
PAPER
QUIET
X1 ASFL1-64.000MHZ-EC-T
U5A ICE40UP5K-SG48ITR
SD5-
SD5+
U11 LM75AIMX_NOPB
W52812B
pixels
U10 ESP32-WROOM-23D_DEV
J11 Header 4x2
mosi
miso
ARX
ATX
FACE_SENSOR
BD_REV
RDX-U
TXD-U
New direct mic inputs for SD ADCs.
J5 JST_PH_1x2
J6 JST_PH_1x2
J7 JST_PH_1x2
J8 JST_PH_1x2
J9 JST_PH_1x2
J10 JST_PH_1x2
MCP6004
SD0+
SD1+
SD2+
SD3+
SD4+
SD5+
vbias
U5C ICE40UP5K-SG48ITR
PCM0
PCM1
PCM2
U5B ICE40UP5K-SG48ITR
CRESET_N
CDONE
SCL
SDA
Consider removing second USB and use bluetooth or wifi from ESP32
J1 0475890001
U1 FT230XS-U
TXD-U
RXD-U
RTS-U
CTS-U
v_bias
-5 supply can be removed for future mic inputs
U6 PDSE1-S5-D6-M-TR
3.3V
U7 AP2127N-3.3
Regulators (300mA max)
D1 1N4148WT
1.2V
U8 AP2127N-1.2
3.3V analog
U9 AP2127N-3.3
DECOUPLING CAPACITORS
FPGA Power
U5D ICE40UP5K-SG48ITR
VCCPLL
VCC
VPP_2V5
VCC_PLL
Copyright 2020-2021 ten-point-nine
Permission is hereby granted, free of charge, to any person obtaining a copy of this software and associated documentation files (the "Software"), to deal in the Software without restriction, including without limitation the rights to use, copy, modify, merge, publish, distribute, sublicense, and/or sell copies of the Software, and to permit persons to whom the Software is furnished to do so, subject to the following conditions:
The above copyright notice and this permission notice shall be included in all copies or substantial portions of the Software.
THE SOFTWARE IS PROVIDED "AS IS", WITHOUT WARRANTY OF ANY KIND, EXPRESS OR IMPLIED, INCLUDING BUT NOT LIMITED TO THE WARRANTIES OF MERCHANTABILITY, FITNESS FOR A PARTICULAR PURPOSE AND NONINFRINGEMENT. IN NO EVENT SHALL THE AUTHORS OR COPYRIGHT HOLDERS BE LIABLE FOR ANY CLAIM, DAMAGES OR OTHER LIABILITY, WHETHER IN AN ACTION OF CONTRACT, TORT OR OTHERWISE, ARISING FROM, OUT OF OR IN CONNECTION WITH THE SOFTWARE OR THE USE OR OTHER DEALINGS IN THE SOFTWARE.
Logic replaced with FPGA
Arduino Mega replaced with ESP32-Wroom
github.com/ten-point-nine/freETarget
Sheet: /
File: Electronic Target.kicad_sch
Title: freETarget
Size: B
Date: 2021-04-06
Rev: 4.0
KiCad E.D.A. kicad (5.99.0-3703-gff463842a)
Id: 1/1