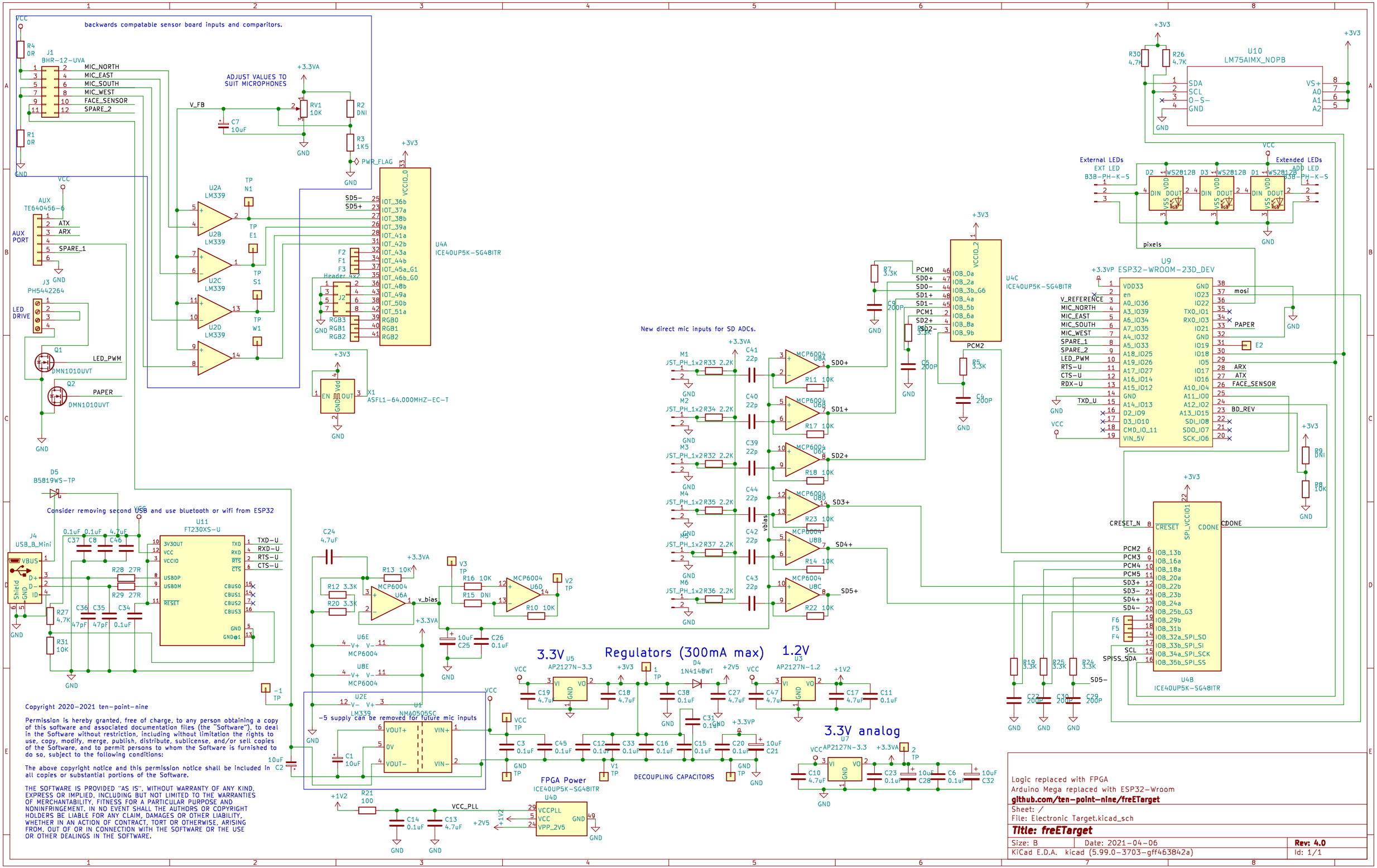
backwards compatable sensor board inputs and comparitors.
ADJUST VALUES TO SUIT MICROPHONES
Consider removing second USB and use bluetooth or wifi from ESP32
-5 supply can be removed for future mic inputs
New direct mic inputs for SD ADCs.
External LEDs
Extended LEDs
Regulators (300mA max)
3.3V
1.2V
3.3V analog
FPGA Power
DECOUPLING CAPACITORS
U4A ICE40UP5K-SG48ITR
U4B ICE40UP5K-SG48ITR
U4C ICE40UP5K-SG48ITR
U4D ICE40UP5K-SG48ITR
U9 ESP32-WROOM-23D_DEV
U10 LM75AIMX_NOPB
U11 FT230XS-U
J1 BHR-12-UVA
J4 USB_B_Mini
J3 PH5442264
J2 Header 4x2
X1 ASFL1-64.000MHZ-EC-T
U1 NMA0505SC
U2A LM339
U2B LM339
U2C LM339
U2D LM339
U2E LM339
U6A MCP6004
U6B MCP6004
U6C MCP6004
U6D MCP6004
U6E MCP6004
U8A MCP6004
U8B MCP6004
U8C MCP6004
U8D MCP6004
U8E MCP6004
U5 AP2127N-3.3
U3 AP2127N-1.2
U7 AP2127N-3.3
D4 1N4148WT
D5 B5819WS-TP
Q1 DMN1010UVT
Q2 DMN1010UVT
AUX TE640456-6
LED DRIVE
AUX PORT
Copyright 2020-2021 ten-point-nine
Permission is hereby granted, free of charge, to any person obtaining a copy of this software and associated documentation files (the "Software"), to deal in the Software without restriction, including without limitation the rights to use, copy, modify, merge, publish, distribute, sublicense, and/or sell copies of the Software, and to permit persons to whom the Software is furnished to do so, subject to the following conditions:
The above copyright notice and this permission notice shall be included in all copies or substantial portions of the Software.
THE SOFTWARE IS PROVIDED "AS IS", WITHOUT WARRANTY OF ANY KIND, EXPRESS OR IMPLIED, INCLUDING BUT NOT LIMITED TO THE WARRANTIES OF MERCHANTABILITY, FITNESS FOR A PARTICULAR PURPOSE AND NONINFRINGEMENT. IN NO EVENT SHALL THE AUTHORS OR COPYRIGHT HOLDERS BE LIABLE FOR ANY CLAIM, DAMAGES OR OTHER LIABILITY, WHETHER IN AN ACTION OF CONTRACT, TORT OR OTHERWISE, ARISING FROM, OUT OF OR IN CONNECTION WITH THE SOFTWARE OR THE USE OR OTHER DEALINGS IN THE SOFTWARE.
Logic replaced with FPGA
Arduino Mega replaced with ESP32-Wroom
github.com/ten-point-nine/freETarget
Sheet: /
File: Electronic Target.kicad_sch
Title: freETarget
Size: B
Date: 2021-04-06
Rev: 4.0
KiCad E.D.A. kicad (5.99.0-3703-gff463842a)
Id: 1/1